Published Manual Number/ECN: MC6PM1S1AX/2025266A

- **Publishing System: TPAS2**
- **Access date: 07/02/2025**
- **Document ECNs: NOT latest**

MP15xxx, MP16xxx, MP1Axxx

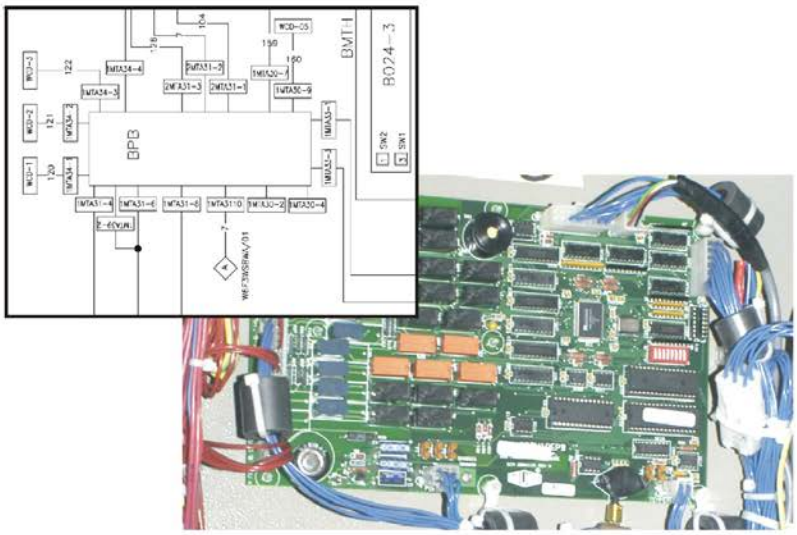

PELLERIN MILNOR CORPORATION **POST OFFICE BOX 400, KENNER, LOUISIANA 70063-0400, U.S.A.**

MC6PM1S1AX/25266A

1	**English-Chinese / 英语，中国语文**	
2	Text information / 文本信息	WX2011004CH/2014334A
3	Safety / 安全	WX2011003CH/2014334A
4	Repair parts / 维修配件	WX2011001CH/2014334A
5	Parts List, 零件清单, Lista de peças , Parça Listesi	W6PM1SPLX/2025132N
12	Legend of Symbols / 常用符号表	WX2011002CH/2014334A
18	Customer Installed Safety Fence / 客户安装的安全围栏 / 顧客設置の安全フェンス / Cerca de segurança instalada pelo cliente / Müşteri Tarafından Kurulan Güvenlik Çiti	W6SYSSGX/2025256A
19	Allied Inputs / 关联设备输入	W6PM1SAIAC/2019206A
20	08BSPE3T Wiring between the boards / 这是在电路板之间的接线	W6PM1SBWBC/2021144A
21	Q7 wiring between the boards / 电路板之间的布线 / fiação entre as placas / panolar arasındaki kablolama	W6PM1SBWCX/2024474A
22	iMX6 wiring between the boards / 电路板之间的布线 / fiação entre as placas / panolar arasındaki kablolama	W6PM1SBWDX/2024474A
23	Data pass / 数据传递	W6PM1SDP2C/2023196A
24	186 - Data pass / 数据传递	W6PM1SDP3AC/2003174A
25	Q7/iMX6 - Data pass / 数据传递	W6PM1SDP3BC/2018512A
26	Data pass / 数据传递	W6PM1SDP4C/2004492A
27	Flat panel display / 平板显示器	W6PM1SECC/2016133A
28	Optional flashing lights / 可选灯光闪烁	W6PM1SFSC/2016525A
29	Control Circuit Power / 控制电路功率	W6PM1SHVC/1999526A
30	186 - Inputs / 输入	W6PM1SI1AC/2018486A
31	Q7 - Inputs / 输入	W6PM1SI1BC/2018512A
32	186 - Inputs / 输入	W6PM1SI2AC/2021053A
33	Q7/iMX6 - Inputs / 输入	W6PM1SI2BC/2021053A
34	Keypad / 键盘	W6PM1SKPAC/2007285A
35	Light / 光	W6PM1SLBC/2023112A
36	Light Curtain / 光幕	W6PM1SLCC/2021346A
37	Inverter belt motor wiring / 逆变器带马达接线	W6PM1SMTRAC/2021053B
38	Motor wiring / 马达接线	W6PM1SMTRC/2024334A
39	Start circuit / 启动电路 / circuito de partida / Devreyi Başlat	W6PM1SOPX/2025154A
40	Pivoting Coinc / 旋转倾斜输送机 / pivotante Coinc / Dönen COINC	W6PM1SPC1X/2025154A
41	Press pump / 洗衣店压机抽水机	W6PM1SPPC/2017245A
42	Return pump - conductivity probes / （回流泵）电导率探头	W6PM1SPP1C/2024053A
43	Start circuit / 启动电路 / circuito de partida / Devreyi Başlat	W6PM1SS+X/2025162A
44	Start Circuit Notes / 启动电路注释	W6PM1SS+NC/2016106A

MC6PM1S1AX/25266A

45	Steam Disinfect / 蒸气消毒 / Desinfecção a vapor / Desinfecção a vapor	W6PM1SSDX/2025132A
46	Delicate Care / 细腻关怀	W6PM1SSQC/2023352A
47	Valves / 阀门	W6PM1SVSC/2024093A
49	**English-Portuguese / língua Inglesa-idioma portugues**	
50	Text information / Informações em texto	WX2011004PT/2014484A
51	Safety / Segurança	WX2011003PT/2014484A
52	Repair parts / Peças de manutenção	WX2011001PT/2014484A
53	Parts List, 零件清单, Lista de peças , Parça Listesi	W6PM1SPLX/2025132N
60	Legend of Symbols / Legenda dos símbolos	WX2011002PT/2014484A
68	Customer Installed Safety Fence / 客户安装的安全围栏 / 顧客設置の安全フェンス / Cerca de segurança instalada pelo cliente / Müşteri Tarafından Kurulan Güvenlik Çiti	W6SYSSGX/2025256A
69	Allied Inputs / entradas associadas	W6PM1SAIAP/2019206A
70	08BSPE3T Wiring between the boards / Fiação entre placas	W6PM1SBWBP/2021144A
71	Q7 wiring between the boards / 电路板之间的布线 / fiação entre as placas / panolar arasındaki kablolama	W6PM1SBWCX/2024474A
72	iMX6 wiring between the boards / 电路板之间的布线 / fiação entre as placas / panolar arasındaki kablolama	W6PM1SBWDX/2024474A
73	Data pass / passagem de dados	W6PM1SDP2P/2023196A
74	186 - Data pass / passagem de dados	W6PM1SDP3AP/2003174A
75	Q7/iMX6 - Data pass / passagem de dados	W6PM1SDP3BP/2018512A
76	Data pass / passagem de dados	W6PM1SDP4P/2004492A
77	Flat panel display / monitor de tela plana	W6PM1SECP/2016133A
78	Optional flashing lights / luz intermitente opcional	W6PM1SFSP/2016525A
79	Control Circuit Power / alimentação do circuito de controle	W6PM1SHVP/1999526A
80	186 - Inputs / entradas	W6PM1SI1AP/2018486B
81	Q7/iMx6 - Inputs / entradas	W6PM1SI1BP/2018512A
82	186 - Inputs / entradas	W6PM1SI2AP/2021053A
83	Q7 -Inputs / entradas	W6PM1SI2BP/2021053A
84	Keypad / teclado	W6PM1SKPAP/2007285A
85	Light / Luz	W6PM1SLBP/2023112A
86	Light Curtain / Cortina de luz	W6PM1SLCP/2021346A
87	Inverter belt motor wiring / inverter kayışı motor kabloları	W6PM1SMTRAP/2021053B
88	Motor wiring / motores	W6PM1SMTRP/2024334A
89	Start circuit / 启动电路 / circuito de partida / Devreyi Başlat	W6PM1SOPX/2025154A
90	Pivoting Coinc / 旋转倾斜输送机 / pivotante Coinc / Dönen COINC	W6PM1SPC1X/2025154A
91	Press pump / bomba de prensa	W6PM1SPPP/2017245A

MC6PM1S1AX/25266A

92	Return pump - conductivity probes / bomba de retorno + sondas de condutividade	W6PM1SPP1P/2024053A
93	Start circuit / 启动电路 / circuito de partida / Devreyi Başlat	W6PM1SS+X/2025162A
94	Start Circuit Notes / partida notas de circuito	W6PM1SS+NP/2016342A
95	Steam Disinfect / 蒸气消毒 / Desinfecção a vapor / Desinfecção a vapor	W6PM1SSDX/2025132A
96	Delicate Care / Roupas delicadas	W6PM1SSQP/2023352A
97	Valves / válvulas	W6PM1SVSP/2024093A
99	**English-Turkish / İngilizce -Türkçe**	
100	Text information / metin bilgileri	WX2011004T/2012156A
101	Safety / güvenlik	WX2011003T/2012156A
102	Repair parts / tamir parçalarý	WX2011001T/2012156A
103	Parts List, 零件清单, Lista de peças , Parça Listesi	W6PM1SPLX/2025132N
110	Legend of Symbols / Legenda dos símbolos	WX2011002T/2014484A
118	Customer Installed Safety Fence / 客户安装的安全围栏 / 顧客設置の安全フェンス / Cerca de segurança instalada pelo cliente / Müşteri Tarafından Kurulan Güvenlik Çiti	W6SYSSGX/2025256A
119	Allied Inputs / Yardımcı girişler	W6PM1SAIAT/2019206A
120	08BSPE3T Wiring between the boards / Kartlar arasındaki kablolar	W6PM1SBWBT/2021144A
121	Q7 wiring between the boards / 电路板之间的布线 / fiação entre as placas / panolar arasındaki kablolama	W6PM1SBWCX/2024474A
122	iMX6 wiring between the boards / 电路板之间的布线 / fiação entre as placas / panolar arasındaki kablolama	W6PM1SBWDX/2024474A
123	Data pass / Veri geçişi	W6PM1SDP2T/2023196A
124	186 - Data pass / Veri geçişi	W6PM1SDP3AT/2003174A
125	Q7/iMX6 - Data pass / Veri geçişi	W6PM1SDP3BT/2018512A
126	Flat panel display / Düz panel ekran	W6PM1SECT/2016133A
127	Optional flashing lights / Seçime bağlı yanıp sönün lambalar	W6PM1SFST/2016525A
128	Control Circuit Power / Kontrol Devresi Gücü	W6PM1SHVT/1999526A
129	186 - Inputs / Girişler	W6PM1SI1AT/2018486B
130	Q7/iMX6 - Inputs / Girişler	W6PM1SI1BT/2018512A
131	186 - Inputs / Girişler	W6PM1SI2AT/2021053A
132	Q7/iMX6 - Inputs / Girişler	W6PM1SI2BT/2021053A
133	Keypad / tuş takımı	W6PM1SKPAT/2007285A
134	Light / ışık	W6PM1SLBT/2023112A
135	Light Curtain / ışık perdesi	W6PM1SLCT/2021346A
136	Inverter belt motor wiring / inverter kayışı motor kabloları	W6PM1SMTRAT/2021053B
137	Motor wiring / Motorlar	W6PM1SMTRT/2024334A

MC6PM1S1AX/25266A

138	Start circuit / 启动电路 / circuito de partida / Devreyi Başlat	W6PM1SOPX/2025154A
139	Pivoting Coinc / 旋转倾斜输送机 / pivotante Coinc / Dönen COINC	W6PM1SPC1X/2025154A
140	Press pump / Pompaya bas	W6PM1SPPT/2017245A
141	Return pump - conductivity probes / Geri besleme pompası ve iletkenlik probu	W6PM1SPP1T/2024053A
142	Start circuit / 启动电路 / circuito de partida / Devreyi Başlat	W6PM1SS+X/2025162A
143	Start Circuit Notes / Devreyi Başlat Notlar	W6PM1SS+NT/2016342A
144	Steam Disinfect / 蒸气消毒 / Desinfecção a vapor / Desinfecção a vapor	W6PM1SSDX/2025132A
145	Delicate Care / Özenli Bakım	W6PM1SSQT/2023352A
146	Valves / Vanalar	W6PM1SVST/2024093A

English-Chinese / 英语，中国语文

1

The text in this Circuit Guide is provided in the following languages:

1. **English**
2. Chinese

這個電路指南中的文字以下語言提供：

1. 英語
2. 中文

Read the separate safety manual before installing, operating, or servicing

阅读单独的安全手册在安装，操作或维修前

How to Get the Necessary Repair Components

You can get components to repair your machine from the approved supplier where you got this machine. Your supplier will usually have the necessary components in stock. You can also get components from the Milnor® factory.

Tell the supplier the machine model and serial number and this data for each necessary component:

- The component number from this manual
- The component name if known
- The necessary quantity
- The necessary transportation requirements
- The schematic number
- If the component is a motor or electrical control, give the nameplate data from the used component.

To write the Milnor factory:

Pellerin Milnor Corporation
Post Office Box 400
Kenner, LA 70063-0400
United States

Telephone: 504-467-2787
Fax: 504-469-9777
Email: parts@milnor.com

如何获取必要的维修组件

您可以从您购买机器的授权供应商处获取组件以维修您的设备。您的供应商通常会在库存中存有必要的组件。您还可以从美国美罗 (Milnor)工厂获取组件。

如需获得某一组件，请告知供应商对应的机器型号、序列号和以下数据：

- 本手册所示的组件编号
- 组件名称，如果已知
- 所需要的数量
- 必要的运输要求
- 电路图编号
- 如果组件是电动机或电气控制元件，请提供原组件的铭牌数据。

美国美罗公司
邮箱 400
肯纳，路易斯安那州 70063-0400
美国

电话： 504-467-2787
传真： 504-469-9777
电子邮件：parts@milnor.com

MC6PM1S1AX

BA		
BAD-1	W6PM1SBW	08BSADCT
BAD-1	W6PM1SBWB	08BSADCT
BAD-1	W6PM1SBWC	08BSADCT
BAD-1	W6PM1SBWD	08BSADCT
BASD	W6PM1SSD	08B1BSDT
BBB-1	W6PM1SBW	08BSBB1T
BBB-1	W6PM1SBWB	08BSBB1T
BBB-1	W6PM1SBWC	08BSBB1T
B-CMR	W6PM1SLB	08BAMVNC
BDA-1	W6PM1SBW	08BSDACHT
BDA-1	W6PM1SBWB	08BSDACHT
BDA-1	W6PM1SBWC	08BSDACHT
BDA-1	W6PM1SBWD	08BSDACHT
BDFP	W6PM1SEC	08EFD320C
BDVFD	W6PM1SD	08BSEVFD5U
BDVFD	W6PM1SD	08BSEVFD5V
BFPC	W6PM1SEC	08EFD320C
BFPI	W6PM1SEC	08BSEDIFAT
BIO-1	W6PM1SBW	08BS816CT
BIO-1	W6PM1SBWB	08BS816CT
BIO-1	W6PM1SBWC	08BS816CT
BIO-1	W6PM1SBWD	08BS816CT
BIO-2	W6PM1SBW	08BS816CT
BIO-2	W6PM1SBWB	08BS816CT
BIO-2	W6PM1SBWC	08BS816CT
BIO-2	W6PM1SBWD	08BS816CT
BIO-3	W6PM1SBW	08BS816CT
BIO-3	W6PM1SBWB	08BS816CT
BIO-3	W6PM1SBWC	08BS816CT
BIO-3	W6PM1SBWD	08BS816CT
BIO-4	W6PM1SBWB	08BS816CT
BIO-4	W6PM1SBWC	08BS816CT
BIO-4	W6PM1SBWD	08BS816CT
BIO-5	W6PM1SBWC	08BS816CT
BIO-5	W6PM1SBWD	08BS816CT
BMTH	W6PM1SBW	08BS5MTHAT
BMTH	W6PM1SBWB	08BS8MTHAT
BMTH	W6PM1SBWC	08BS8MTHAT
BMTH	W6PM1SBWD	08BS8MTHAT
BO24-1	W6PM1SBW	08BSO24AT
BO24-1	W6PM1SBWB	08BSO24AT
BO24-1	W6PM1SBWC	08BSO24AT
BO24-1	W6PM1SBWD	08BSO24AT
BPB	W6PM1SBW	08BSPDT
BPB	W6PM1SBWB	08BSPE2T
BPB	W6PM1SBWC	08BHGQ7BS
BPB	W6PM1SBWD	08BHMX6LAT
BPC-1	W6PM1SBW	96RH708A3T
BPC-1	W6PM1SBWB	96RH708A3T

BWPS	W6PM1SI2	08BNWPSAT
BWPS	W6PM1SI2A	08BNWPSAT
BWPS	W6PM1SI2B	08BNWPSAT
CB		
CBFAN1	W6PM1SMTR	09FTB010T
CBPRD	W6PM1SMTR	09FTB016T
CD		
CD1	W6PM1SPC1	09CF002037
CDCH	W6PM1SPC1	09CA0100A37
CDD	W6PM1SPC1	09CF002037
CL		
CLDSDS <3-2025	W6PM1SSD	09CL2C-C37
CLDSDS >3-2025	W6PM1SSD	09CL2C-D37
CP		
CPCBL	W6PM1SI2	09RPE011
CPCBL	W6PM1SI2A	09RPE011
CPCBL	W6PM1SI2B	09RPE011
CPGCR	W6PM1SI1	09RPE010R
CPGCR	W6PM1SI1A	09RPE010R
CPGCR	W6PM1SI1B	09RPE010R
CPGCS	W6PM1SI1	09RPE010E
CPGCS	W6PM1SI1A	09RPE010E
CPGCS	W6PM1SI1B	09RPE010E
CPLC	W6PM1SLC	09RPE018LBA
CPLCC	W6PM1SLC	09RPE018LBC
CR		
CR100	W6PM1SSQ	09C024D37
CR250	W6PM1SSQ	09C024D37
CRBO	W6PM1SLC	09C024D37
CRCBL	W6PM1SPC1	09C024D37
CRD	W6PM1SPC1	09C024D37
CRDDU	W6PM1SVS	09C024D37
CRFLH	W6PM1SPP1	09C024D24
CRFLL	W6PM1SPP1	09C024D24
CRGC	W6PM1SI1	09C024D37
CRGC	W6PM1SI1A	09C024D37
CRGC	W6PM1SI1B	09C024D37
CRH	W6PM1SPC1	09C024D37
CRN	W6PM1SSQ	09C024D37
CRPRB	W6PM1SPC1	09C024D37
CRRB	W6PM1SPC1	09C024D37
CRS+	W6PM1SS+	09C024D37
CRSGG	W6PM1SS+	09C024D37
CS		
CSA	W6PM1SPC1	09MC08B337
CSCRB	W6PM1SVS	09MC08B337
CSFAN1	W6PM1SS+	09MC08B337
CSFAN2	W6PM1SS+	09MC08B337
CSFAN3	W6PM1SS+	09MC08B337
CSHP(MP16xx-H)	W6PM1SS+	09MC08G337

CSHP(MP16xx-L)	W6PM1SS+	09MC08L337
CSHP(MP1Axx-H)	W6PM1SS+	09MC08L337
CSHP(MP1Axx-L)	W6PM1SS+	09MC08U337
CSPRP	W6PM1SMTR	09MC08B337
CSRBF	W6PM1SVS	09MC08B337
CSRBR	W6PM1SVS	09MC08B337
CSRC	W6PM1SS+	09MC08C337
EB		
EBSG	W6PM1SS+	09H015
EC		
ECC	W6PM1SVS	38C201
ECH	W6PM1SS+	38C202
EF		
EF1	W6PM1SHV	09FF005AWN
EF2	W6PM1SHV	09FF005AWN
EF37	W6PM1SHV	09FF006AMA
EFF1	W6PM1SMTR	09FF002AWN
EFF2	W6PM1SMTR	09FF002AWN
EL		
ELES	W6PM1SS+	09N507E
ELES	W6PM1SS+	09N507E
ELES	W6PM1SS+	09N507E
ELES	W6PM1SS+	09N507E
ELLB	W6PM1SLB	09J092A12
ELM	W6PM1SPC1	09H025V37
ELPRP	W6PM1SPP	09J060A37
ELPRP	W6PM1SPP1	09J060A37
ELPTT	W6PM1SPP	09J060A37
ELPTT	W6PM1SPP1	09J060A24
ELSG	W6PM1SS+	09J060WH37
ELSGF	W6PM1SS+	09H025V37
ES		
ES24	W6PM1SBW	08PSL10C224
ES24	W6PM1SBWB	08PSL10C224
ES24	W6PM1SBWC	08PSL10C224
ES24	W6PM1SSQ	08PSL10C224
ES24	W6PM1SBWD	08PSL10C224
ESLB	W6PM1SLB	08PSS3401T
ESLC	W6PM1SLC	09RPE018LBD
ESPS	W6PM1SBW	08PSS3401T
ESPS	W6PM1SBWB	08PSS3401T
ESPS	W6PM1SBWC	08PSS3401T
ESPS	W6PM1SBWD	08PSS3401T
ESPS2	W6PM1SBWC	08PSS2401T
ESPS2	W6PM1SBWD	08PSS2402
ET		
ETCRB	W6PM1SMTR	09FTD0037T
ETFAN1	W6PM1SMTR	09FTD0010T
ETFAN2	W6PM1SMTR	09FTD0010T
ETFAN3	W6PM1SMTR	09FTD0010T

ETHP(MP16xx-H)	W6PM1SMTR	09FTD0121T
ETHP(MP16xx-L)	W6PM1SMTR	09FTD0230T
ETHP(MP1Axx-H)	W6PM1SMTR	09FTD0230T
ETHP(MP1Axx-L)	W6PM1SMTR	09FTD0040T
ETPRP	W6PM1SMTR	09FTD0037T
ETRB	W6PM1SMTR	09FTD0037T
ETRC	W6PM1SMTR	09FTC0016T
EVFLV	W6PM1SMTR	09UA050A32
EX		
EX37	W6PM1SHV	09UA050A37
EX37	W6PM1SHV	09UA050AAB
EX37	W6PM1SHV	09UA050A98
EXFHV	W6PM1SMTR	09UA050AAB
EXFHV	W6PM1SMTR	09UA050B98
KB		
KBMP	W6PM1SKP	08ND0206N
KBMP	W6PM1SKPA	08ND5X6GC
MT		
MTCRB	W6PM1SMTR	MESSAGE SN
MTDF	W6PM1SMTR	13AF210071
MTHF1	W6PM1SMTR	MESSAGE SN
MTHF2	W6PM1SMTR	MESSAGE SN
MTHP	W6PM1SMTR	MESSAGE SN
MTPRP	W6PM1SMTR	MESSAGE SN
MTRB	W6PM1SMTR	MESSAGE SN
MTRC	W6PM1SMTR	MESSAGE SN
PT1	W6PM1SBWB	PT1A/B
PT1	W6PM1SBWC	PT1A/B
PT1	W6PM1SBWD	PT1A/B
PT1A	MP1550/1640/1650	09N700B
PT1B	MP1656/1556	09N700D
PX		
PXCB1	W6PM1SI1	09RPS12ADS
PXCB1	W6PM1SI1A	09RPS12ADS
PXCB1	W6PM1SI1B	09RPS12ADS
PXCB2	W6PM1SI1	09RPS12ADS
PXCB2	W6PM1SI1A	09RPS12ADS
PXCB2	W6PM1SI1B	09RPS12ADS
PXCT	W6PM1SI1	09RPS30ADS
PXCT	W6PM1SI1A	09RPS30ADS
PXCT	W6PM1SI1B	09RPS30ADS
PXDDD	W6PM1SI2	09RPS30ADS
PXDDD	W6PM1SI2A	09RPS30ADS
PXDDD	W6PM1SI2B	09RPS30ADS
PXDDU	W6PM1SI2	09RPS30ADS
PXDDU	W6PM1SI2A	09RPS30ADS
PXDDU	W6PM1SI2B	09RPS30ADS
PXLCD	W6PM1SI2	09RPS30ADS
PXLCD	W6PM1SI2A	09RPS30ADS
PXLCD	W6PM1SI2B	09RPS30ADS

PXLCU	W6PM1SI2	09RPS30ADS
PXLCU	W6PM1SI2A	09RPS30ADS
PXLCU	W6PM1SI2B	09RPS30ADS
PXSB	W6PM1SI1	09RPS18ADS
PXSB	W6PM1SI1A	09RPS18ADS
PXSB	W6PM1SI1B	09RPS18ADS
PXSL	W6PM1SI1A	09RPS18ADS
PXSL	W6PM1SI1B	09RPS18ADS
PXSM	W6PM1SI1	09RPS30ADS
PXSM	W6PM1SI1A	09RPS30ADS
PXSM	W6PM1SI1B	09RPS30ADS
PXSS	W6PM1SI1B	09RPS30ADS
PXST	W6PM1SI1	09RPS30ADS
PXST	W6PM1SI1A	09RPS30ADS
PXST	W6PM1SI1B	09RPS30ADS
PXSU	W6PM1SI1	09RPS30ADS
PXSU	W6PM1SI1A	09RPS30ADS
PXSU	W6PM1SI1B	09RPS30ADS
RS		
RS01	W6PM1SLB	ECEUMTRES
RS02	W6PM1SBWC	ECEUMTRES
RS03	W6PM1SBWC	ECEUV8R
RS03	W6PM1SBWD	ECEUV8R
SH		
SHCMD	W6PM1SMTR	09N042204
SHCMD	W6PM1SS+	09N042204
SHDA	W6PM1SAIA	09N405M210
SHES	W6PM1SS+	09N506
SHES	W6PM1SS+	09N507F
SHES	W6PM1SS+	09N507F
SHES	W6PM1SS+	09N507F
SHES	W6PM1SS+	09N507F
SHESR	W6PM1SS+	09N506
SHFR	W6PM1SI2	09N405PB10
SHFR	W6PM1SI2A	09N405PB10
SHFR	W6PM1SI2B	09N405PB10
SHL	W6PM1SS+	09RS0001
SHMD	W6PM1SI2A	09N405M210
SHMD	W6PM1SI2B	09N405M210
SHPE1	W6PM1SS+	09R014A
SHPE2	W6PM1SS+	09R014A
SHPL	W6PM1SAI	MESSAGE EW
SHPRP	W6PM1SPP	09N405M210
SHPRP	W6PM1SPP1	09N405M210
SHR	W6PM1SS+	09RS0001
SHRFR	W6PM1SI2	09N405PB10
SHRFR	W6PM1SI2A	09N405PB10
SHRFR	W6PM1SI2B	09N405PB10
SHS+	W6PM1SS+	09N405PB10
SHS+R	W6PM1SS+	09N405PB10

SHSC	W6PM1SI1	09N405PY10
SHSC	W6PM1SI1A	09N405PY10
SHSC	W6PM1SI1B	09N405PY10
SHSDL	W6PM1SSD	09N127C
SHSDT	W6PM1SSD	09N405S320
SHSMA	W6PM1SS+	09N405M220
SHSO	W6PM1SS+	09N404PR01
SK		
SKI	W6PM1SS+	09N127C
SKPRO	W6PM1SI1	09N127C
SKPRO	W6PM1SI1A	09N127C
SKPRO	W6PM1SI1B	09N127C
SL		
SLPPH	W6PM1SPP	09R014A
SLPPH	W6PM1SPP1	09R014A
SLPPL	W6PM1SPP	09R014A
SLPPL	W6PM1SPP1	09R014A
SM		
SMBTL	W6PM1SI1A	09RM01209S
SMBTL	W6PM1SI1B	09RM01209S
SMBTR	W6PM1SI1A	09RM01209S
SMBTR	W6PM1SI1B	09RM01209S
SP		
SPHT	W6PM1SI2B	27E7106C
VE		
VE100	W6PM1SSQ	96RH712A02
VE250	W6PM1SSQ	96RH712A02
VEBP	W6PM1SVS	96RH708E37
VEBV	W6PM1SVS	96R302B37
VECD	W6PM1SVS	96R301B37
VECD	W6PM1SVS	96R301B37
VECL	W6PM1SVS	96RH712A01
VECR	W6PM1SVS	96RH712A01
VECU	W6PM1SVS	96R301B37
VEDDD	W6PM1SVS	96R301B37
VEDDU	W6PM1SVS	96R301B37
VEDFD	W6PM1SVS	96R301B37
VEDSDF	W6PM1SSD	96R301B37
VEDSDL	W6PM1SSD	96R301B37
VEHV	W6PM1SBWB	96RH708E39
VEHV	W6PM1SBWC	96RH708E39
VEHV	W6PM1SBWD	96RH708E39
VEIS	W6PM1SVS	96R302B37
VELFD	W6PM1SVS	96R301B37
VEPP1	W6PM1SVS	96RH710E37
VEPP2	W6PM1SVS	96RH710E37
VEPRP	W6PM1SSP	96TCC2AA37
VERDB	W6PM1SVS	96RH713S01C1
VERL	W6PM1SVS	96RH709E37
VERR	W6PM1SVS	96RH709E37

VERS	W6PM1SVS	09RH712E37
VEW	W6PM1SS+	96TDC2AA37
VR		
VRC	W6PM1SVS	09ARC0055J
VRR	W6PM1SVS	09ARC0055J

Legend of Symbols 常用符号表

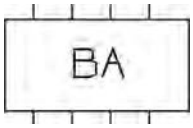

BA = Printed Circuit Board
印刷电路板

CB = Circuit Breaker
断路器

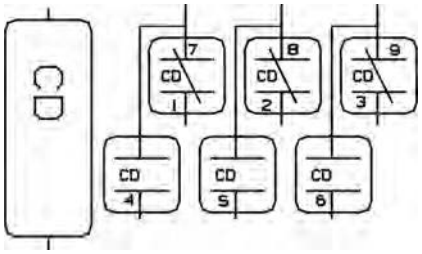

CD = Time Delay Relay
延时继电器

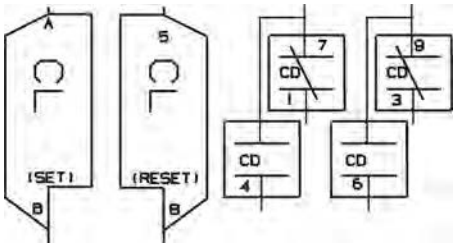

CL = Latch Relay
锁存继电器

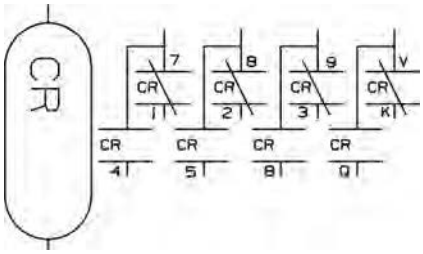

CR = Relay
继电器

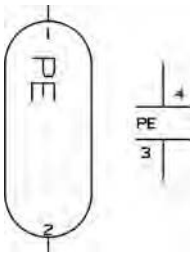

CP = Photo-Eye
光眼

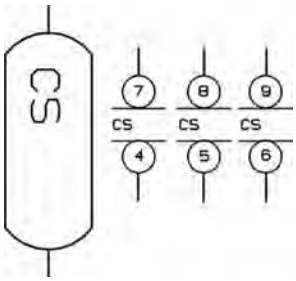

CS = Contactor/Motor Starter
接触器/电动机起动器

EB = Audible Signal
声音信号

EC = Clutch
离合器

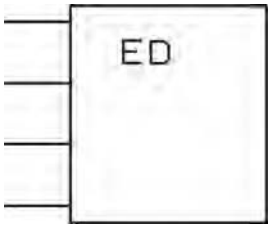

ED = Electronic Display
电子显示**屏**

EF = Fuse
保险丝

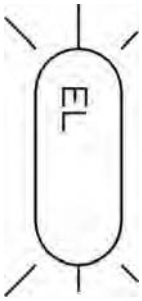

EL = Light
灯

EM = Electro Magnatic Solenoid
电磁线圈

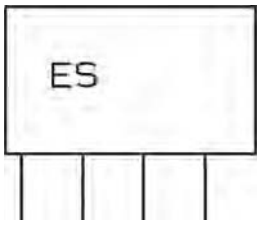

ES = Electronic Power Supply
电子电源

ET = Thermal Overload
热过载

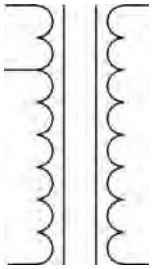

EX = Transformer
变压器

KB = Keyboard/Keypad
键盘/键盘

MN = Electronic Monitor
电子显示监控器

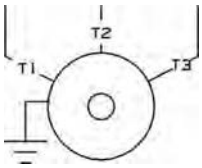

MR = Motor
马达

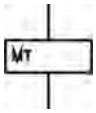

MT = Board Connector
板连接器

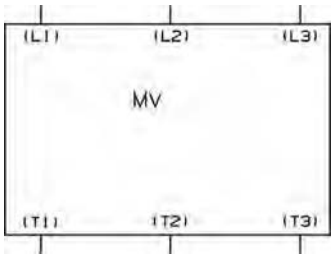

MV = Motor Inverter
电机变频器逆变器

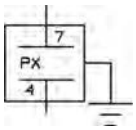

PX = Proximity Switch
接近开关

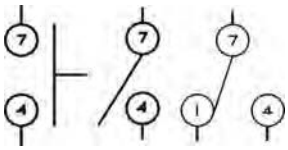

SH = Switch Hand Operated
切换手动操作

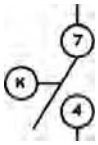

SK = Switch Key Operated
切换通过按键操作

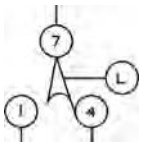

SL = Switch Level Operated
液位开关

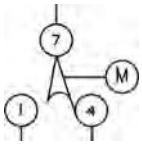

SM = Switch Mechanically Operated
机械操作开关

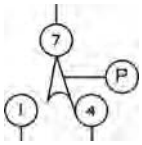

SP = Switch Pressure Operated
开关压力

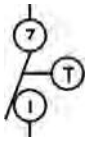

ST = Switch Temperature Operated
温度开关

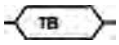

TB = Terminal Block
接线端子

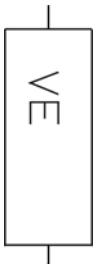

VE = Valve Electrically Operated
电磁阀

WC = Wiring Connector
接线连接器

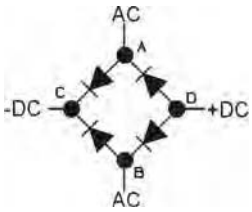

ZF = Rectifier
整流器

The safety fence gate interlock switch installed by the end user must have a separate pole for each machine in the fenced area.
See MILNOR document BISUUI01 and BISUUI02 in the safety manual for additional information.

最终用户安装的安全围栏门联锁开关必须为围栏区域内的每台机器配备单独的杆。
有关更多信息，请参阅安全手册中的 MILNOR 文档 BISUUI01 和 BISUUI02。

エンド ユーザーが設置する安全フェンス ゲート インターロック スイッチには、フェンスで囲まれたエリア内の各マシンごとに個別のポールが必要です。
詳細については、安全マニュアルの MILNOR ドキュメント BISUUI01 および BISUUI02 を参照してください。

O interruptor de intertravamento do portão da cerca de segurança instalado pelo usuário final deve ter um poste separado para cada máquina na área cercada.
Consulte os documentos BISUUI01 e BISUUI02 da MILNOR no manual de segurança para obter informações adicionais.

Son kullanıcı tarafından monte edilen emniyet çit kapısı kilitleme anahtarı, çitle çevrili alandaki her makine için ayrı bir direğe sahip olmalıdır.
Ek bilgi için güvenlik kılavuzundaki MILNOR dokümanı BISUUI01 ve BISUUI02'ye bakın.

SAFETY FENCE GATE WIRING FOR
安全围栏门接线
安全柵ゲート配線
FIAÇÃO DE PORTÃO DE CERCA DE SEGURANÇA PARA
GÜVENLİK ÇİT KAPISI KABLOLAMA

SHUTTLES
班车
シャトル
Ônibus
Servisler
SEE W6SH5SS+, W6CD5SS+

2 STAGE PRESS
2级压榨
2段階プレス
Prensa de 2 estágios
2 Aşamalı Pres
SEE W6PR5SS+

SINGLE STAGE PRESS
单级压机
シングルステージプレス
Prensa de estágio único
Tek Kademeli Pres
SEE W6PM1SS+

CENTRIFUGAL EXTRACTORS
离心萃取机
遠心抽出機
Extrator centrífugo
Santrifüjlü Ekstraktör
SEE W6EX5S+

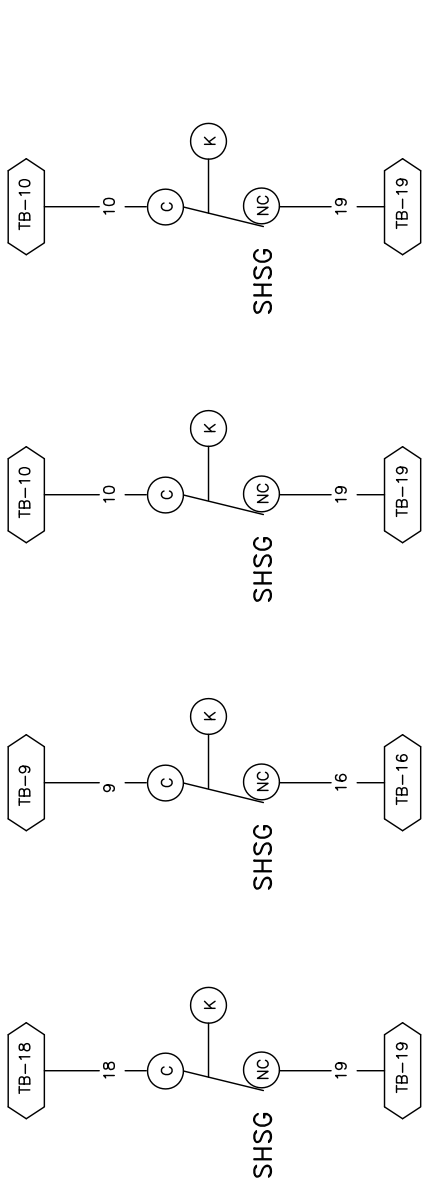

00 01 02 03 04 05 06 07 08 09 10 11 12 13

Customer installed Safety Fence
客户安装的安全围栏
顧客設置の安全フェンス
Cerca de segurança instalada pelo cliente
Müşteri Tarafından Kurulan Güvenlik Çiti

W6SYSSGX

PELLERIN MILNOR CORPORATION

2025256A

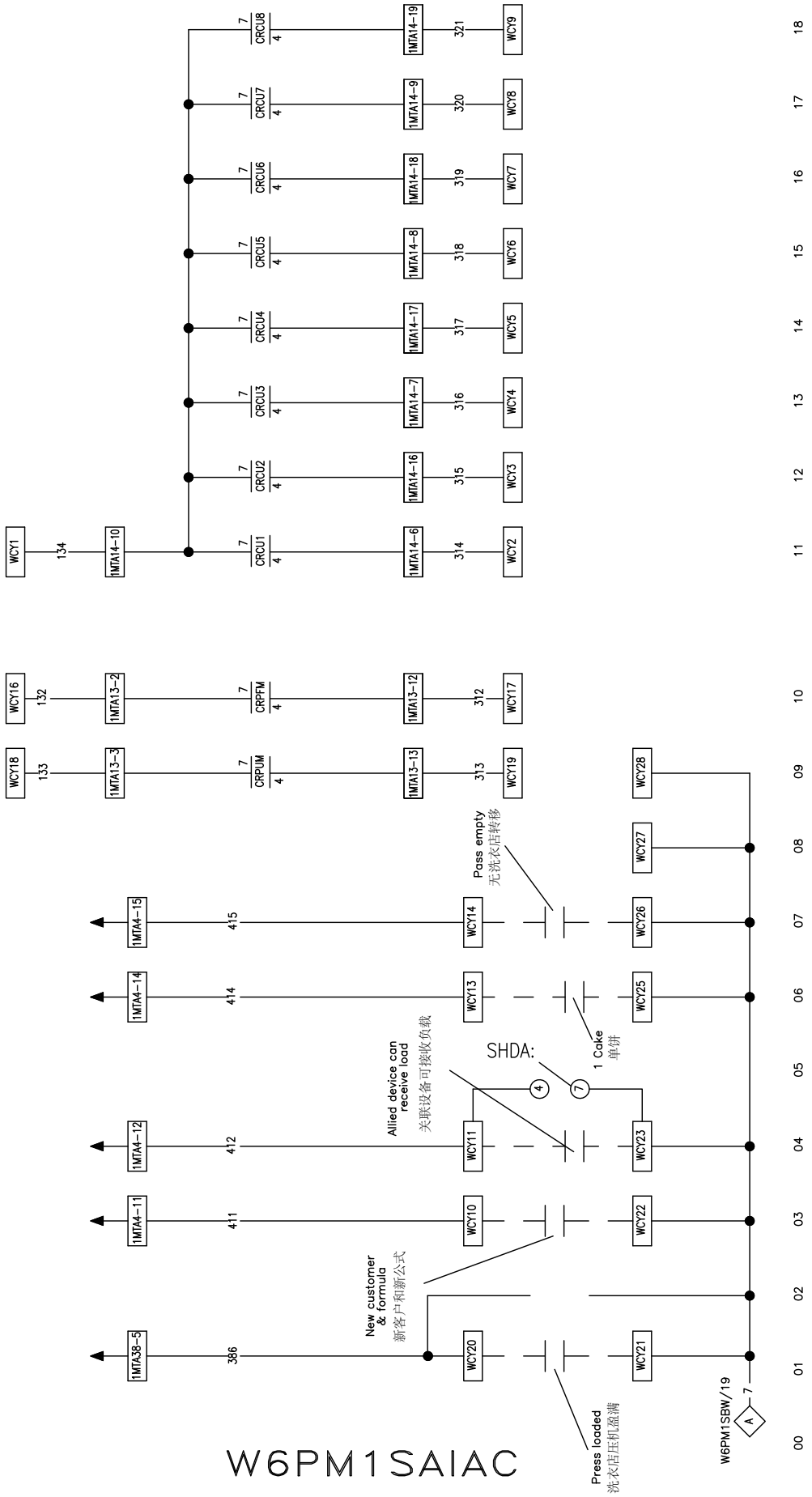

Allied Inputs
关联设备输入

W6PM1SAIAC

PELLERIN MILNOR CORPORATION

2019206A

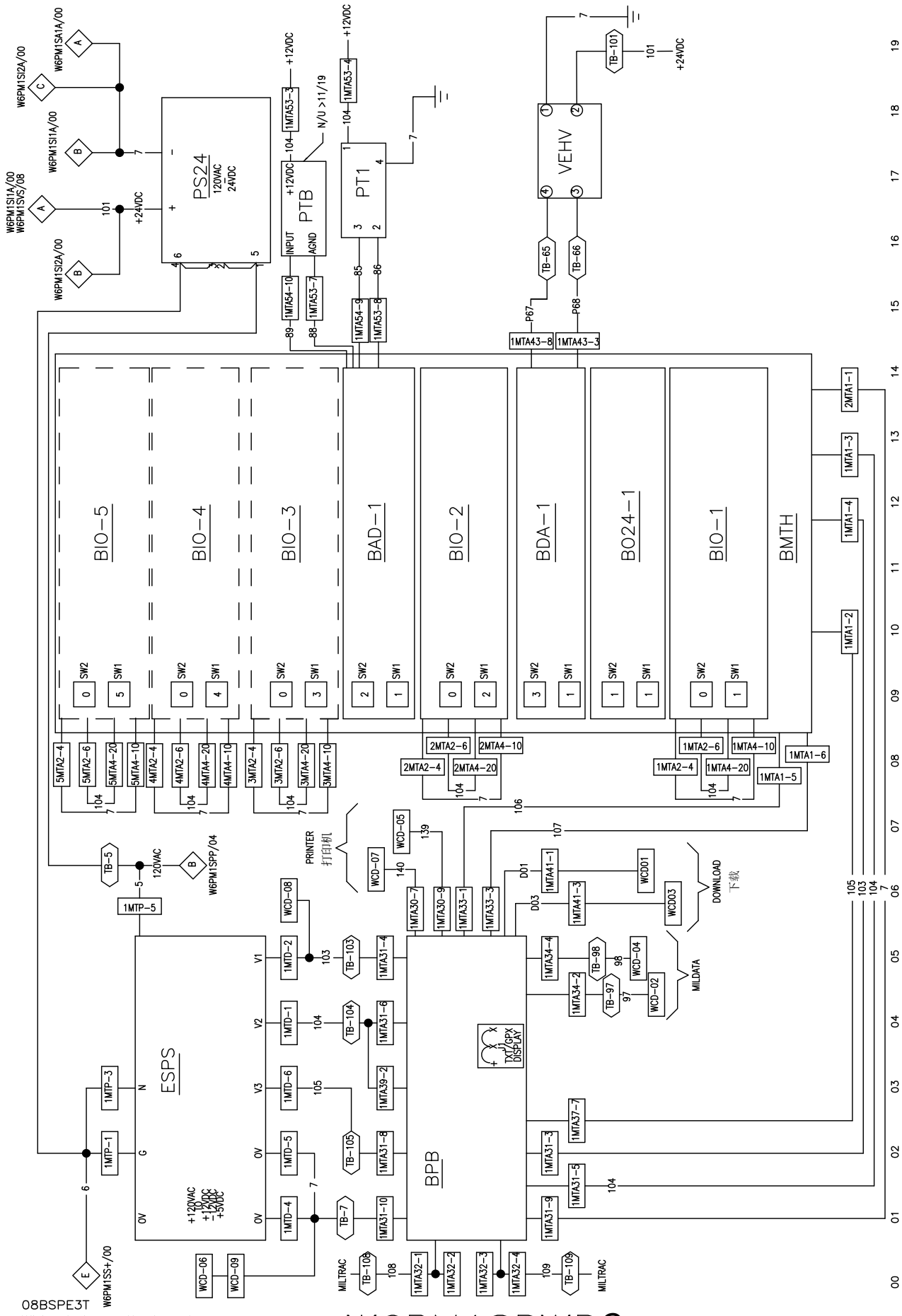

08BSPE3T
Wiring between the boards
这是在电路板之间的接线

W6PM1SBWBC

PELLERIN MILNOR CORPORATION

2021144A

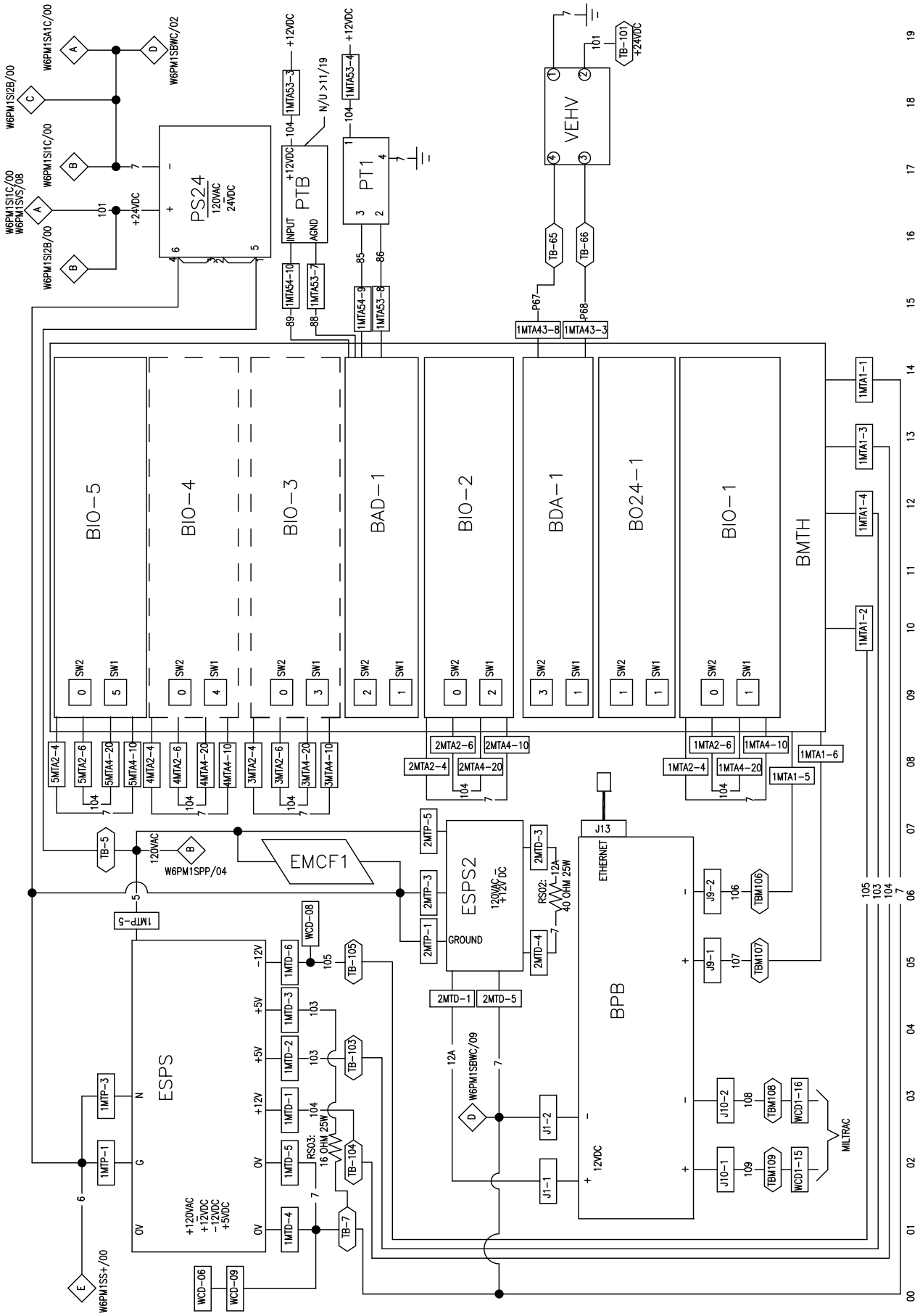

Q7
Wiring between the boards
电路板之间的布线
fiação entre as placas
panolar arasındaki kablolama

W6PM1SBWCX

PELLERIN MILNOR CORPORATION

2024474A

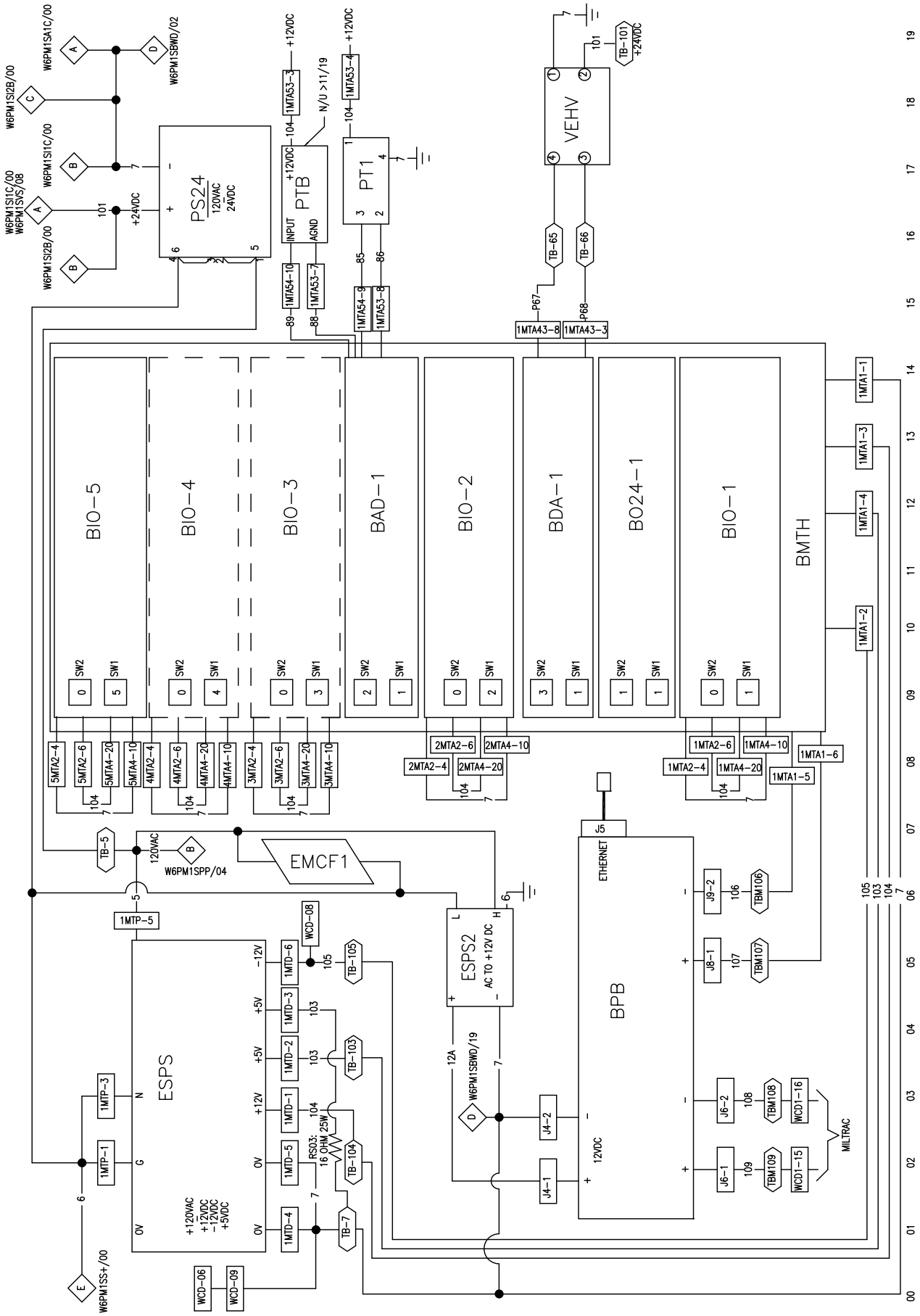

iMX6
Wiring between the boards
电路板之间的布线
fiação entre as placas
panolar arasındaki kablolama

W6PM1SBWDX

PELLERIN MILNOR CORPORATION

2024474A

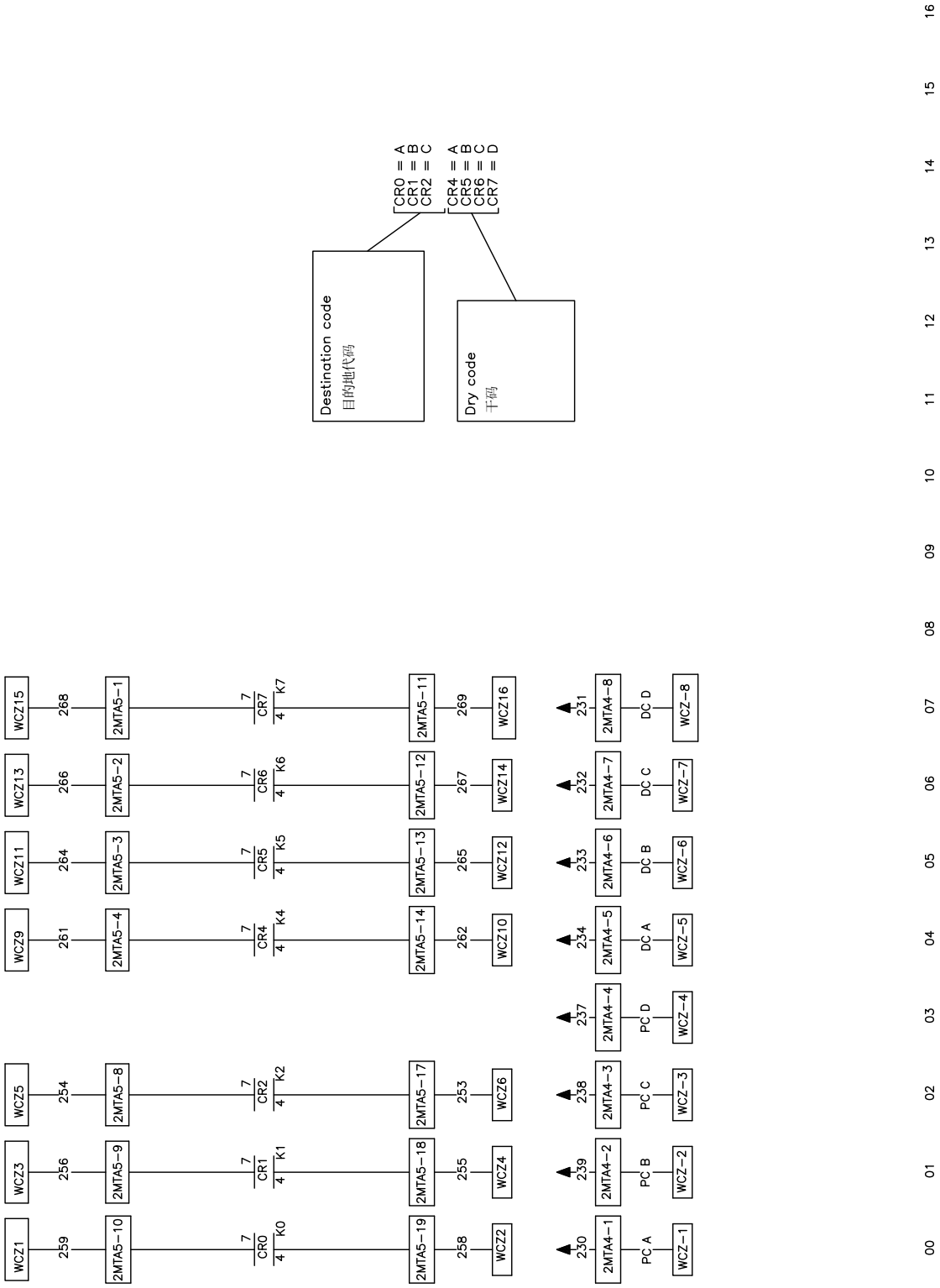

Data pass
数据传递

W6PM1SDP2C

PELLERIN MILNOR CORPORATION

2023196A

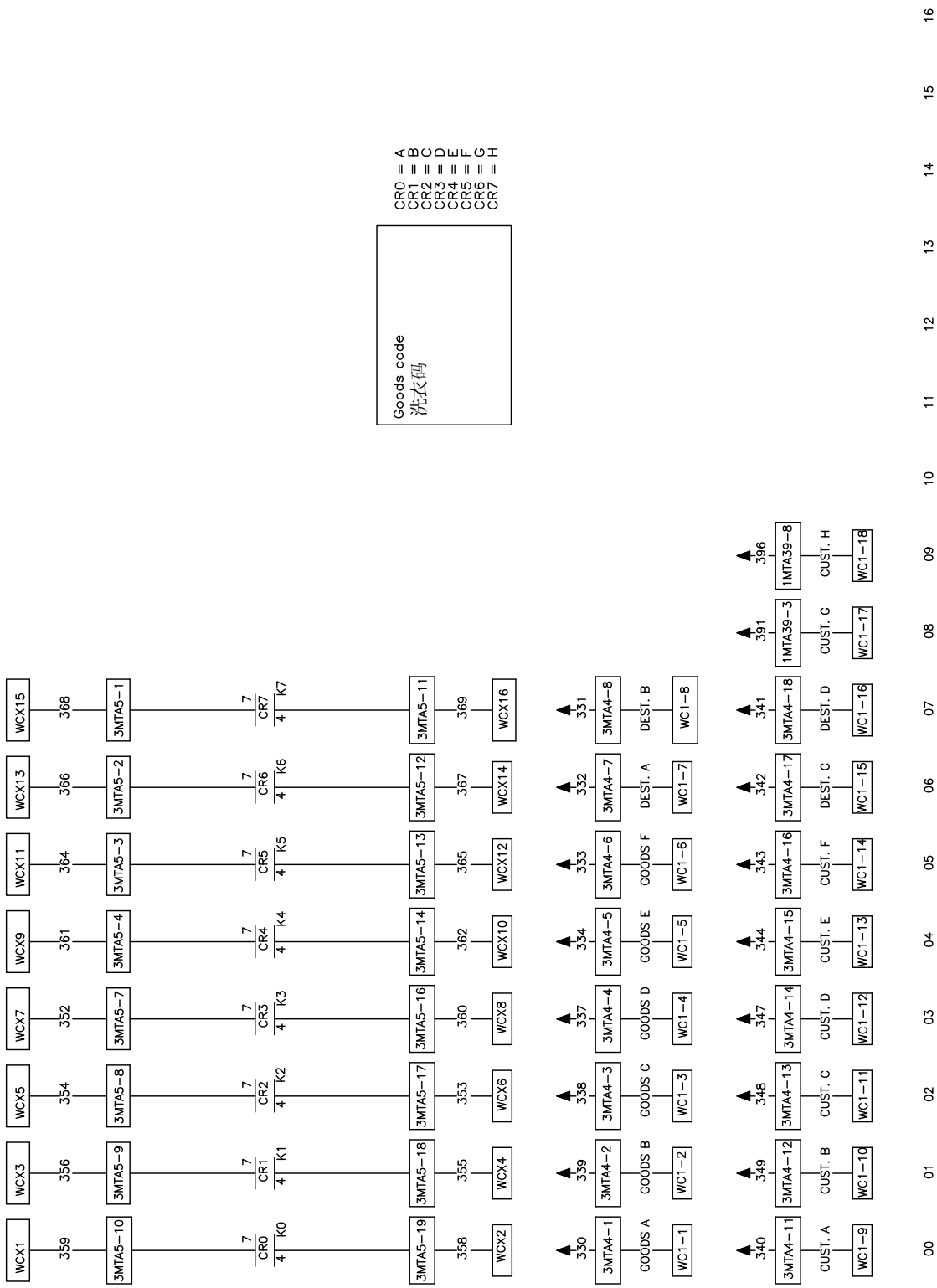

Data pass
数据传递

W6PM1SDP3AC

PELLERIN MILNOR CORPORATION

2003174A

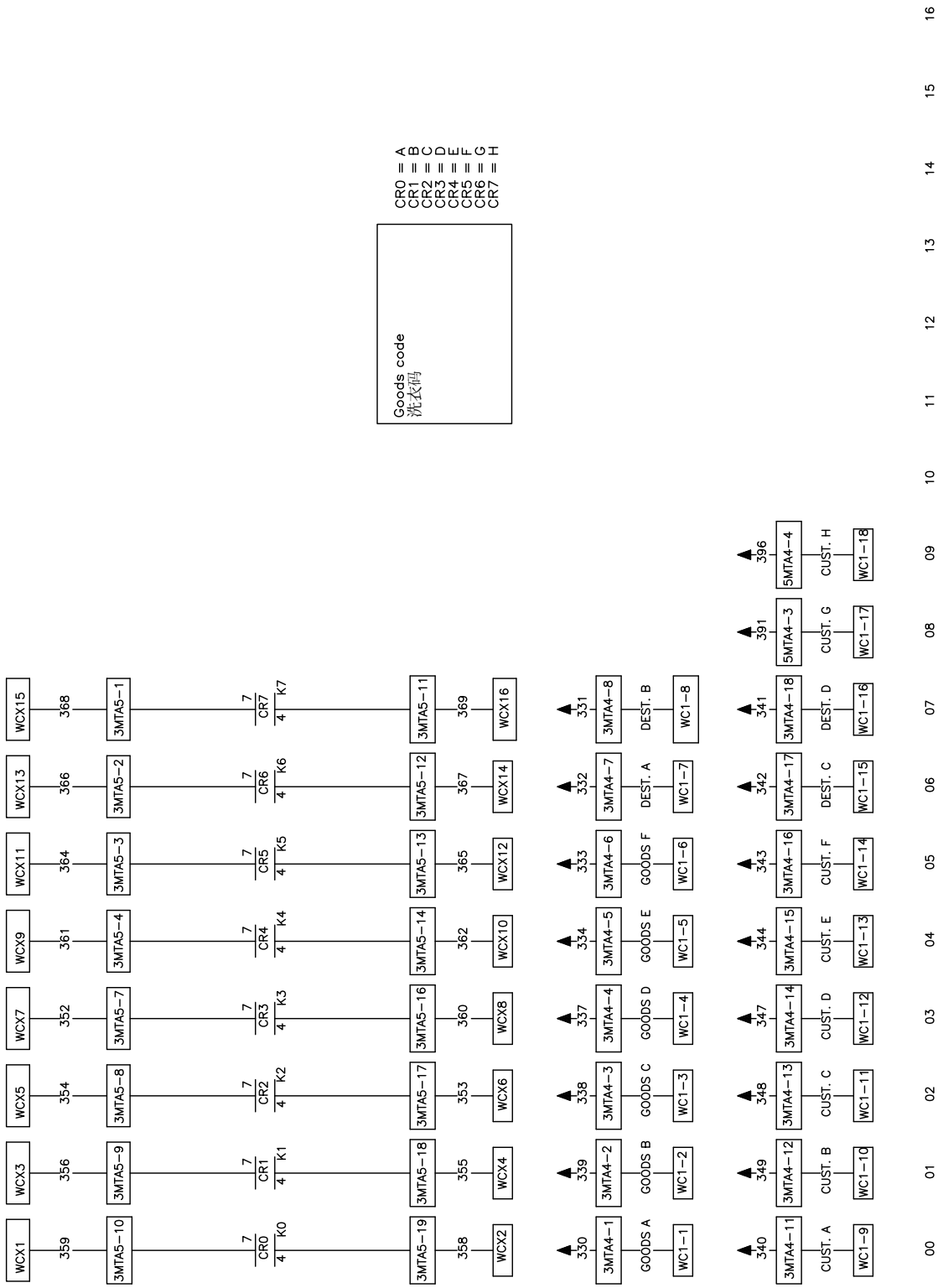

Data pass
数据传递

W6PM1SDP3BC

PELLERIN MILNOR CORPORATION

2018512A

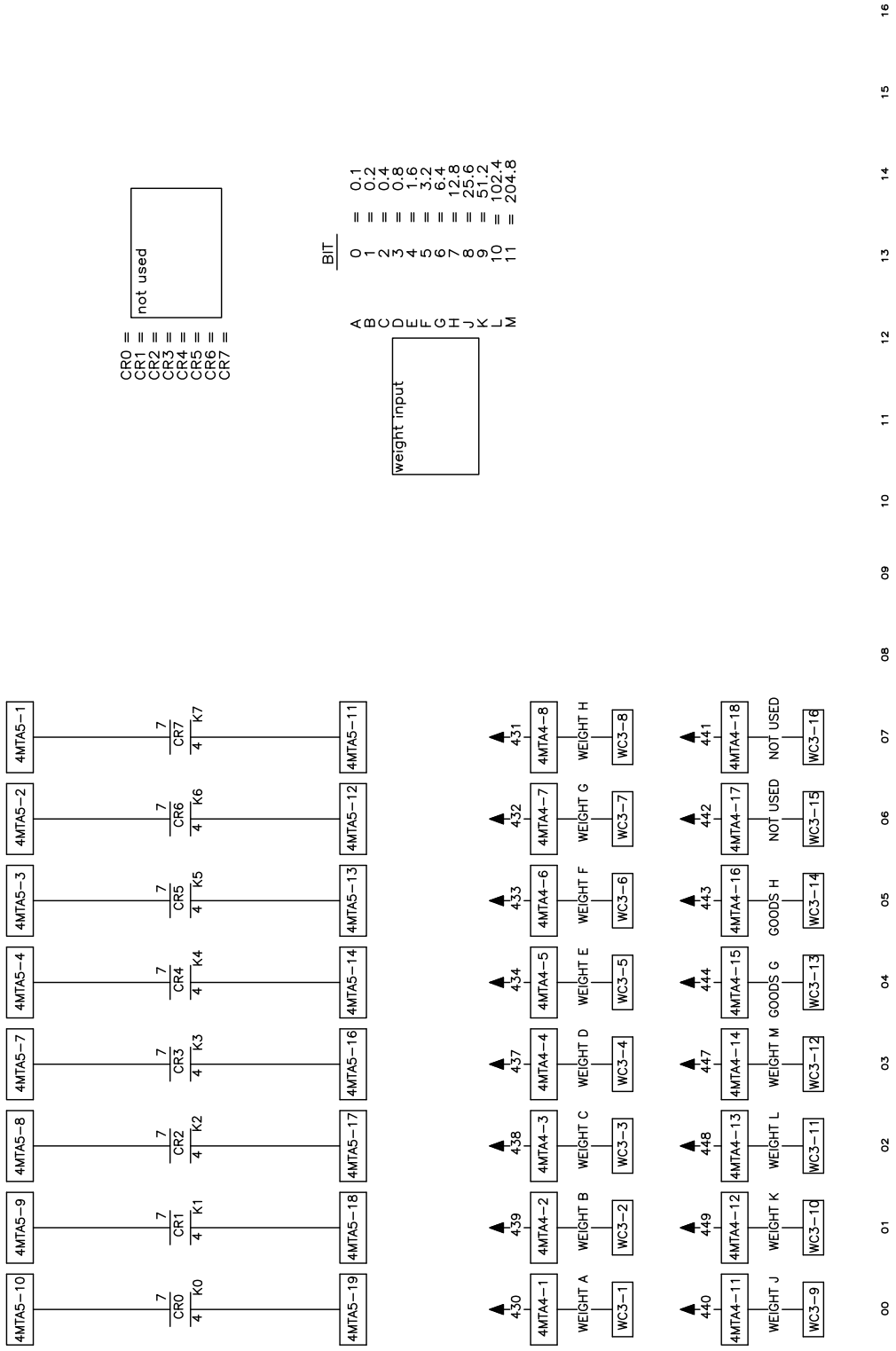

Data pass

数据传递

W6PM1SDP4C

PELLERIN MILNOR CORPORATION

2004492A

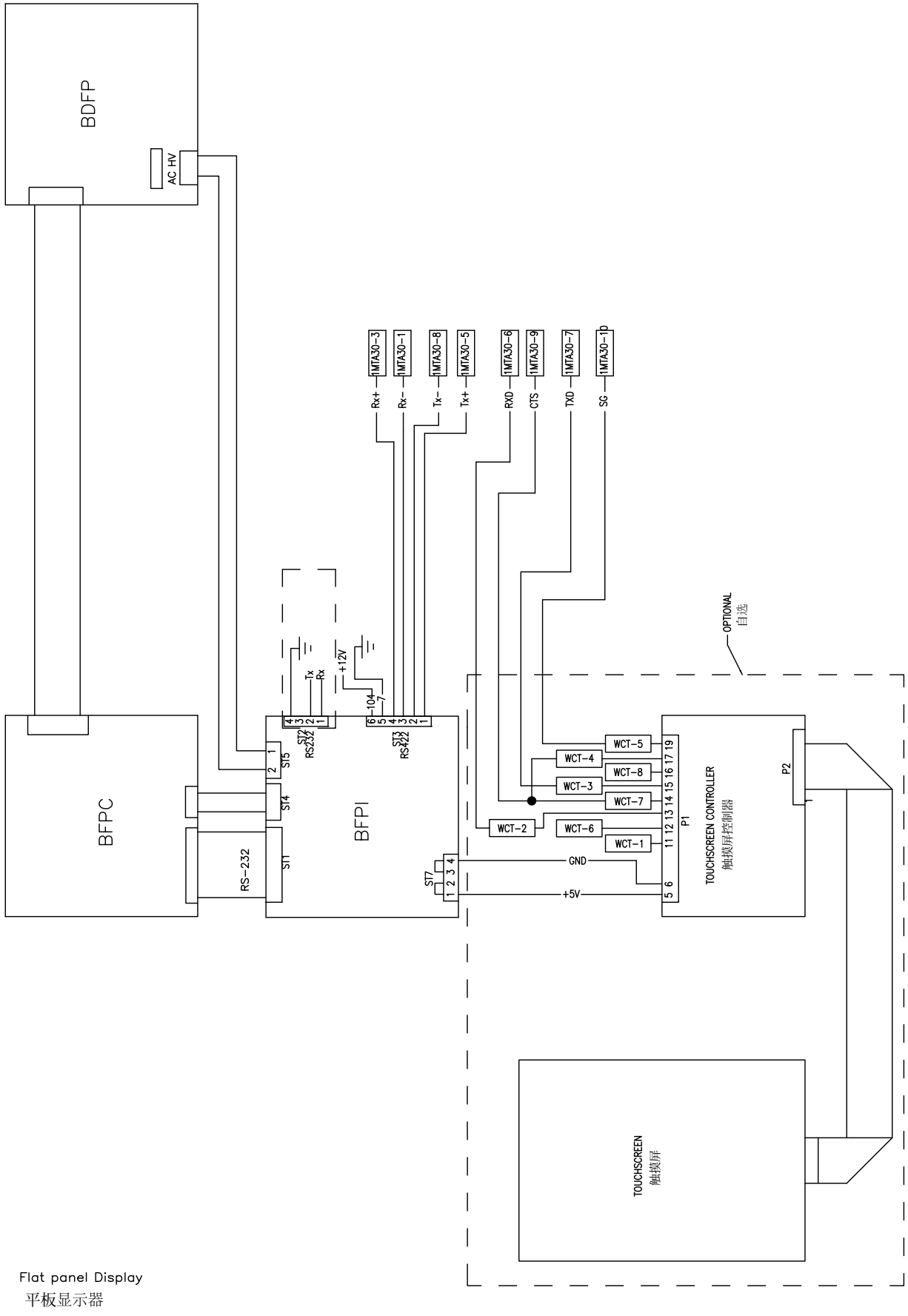

Flat panel Display
平板显示器

W6PM1SECC

PELLERIN MILNOR CORPORATION

2016133A

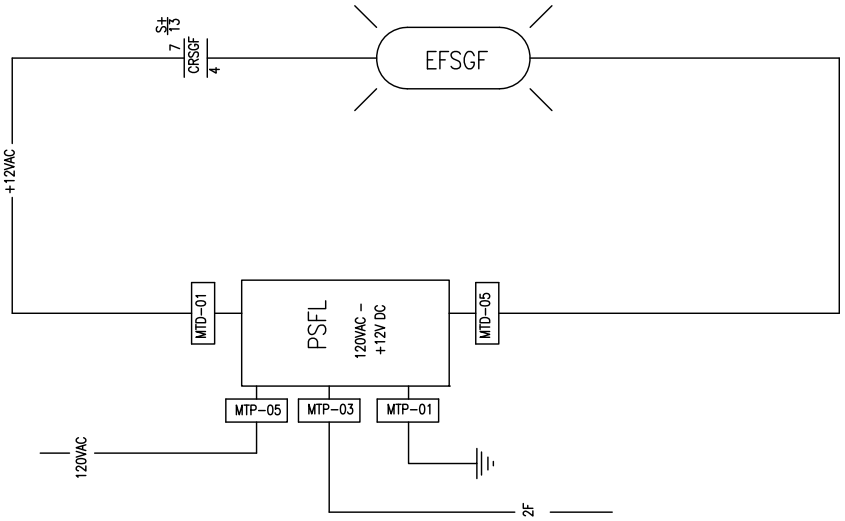

Optional flashing lights
可选灯光闪烁

W6PM1SFSC

PELLERIN MILNOR CORPORATION

2016525A

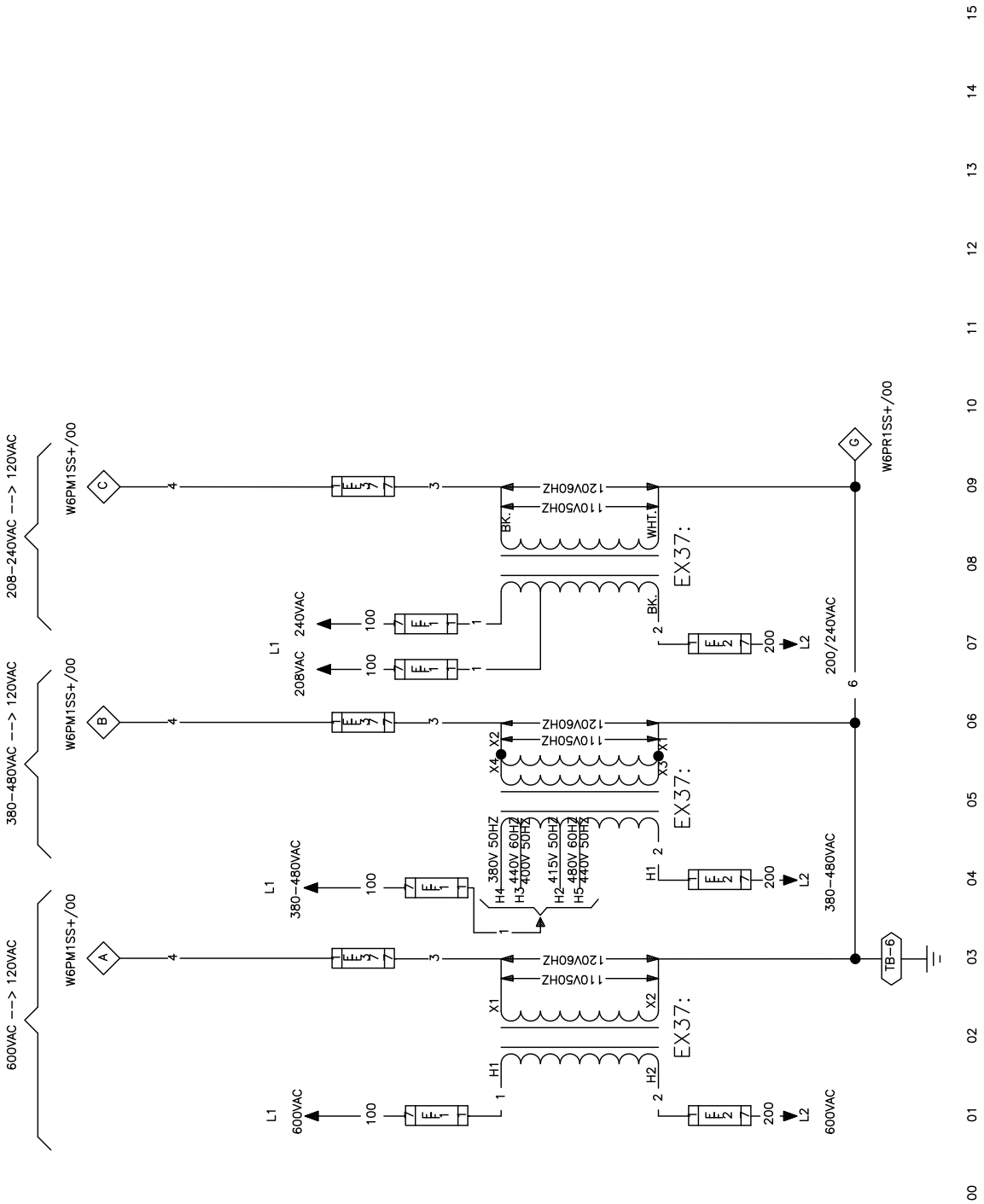

Control Circuit Power

控制电路功率

W6PM1SHVC

PELLERIN MILNOR CORPORATION

99526A

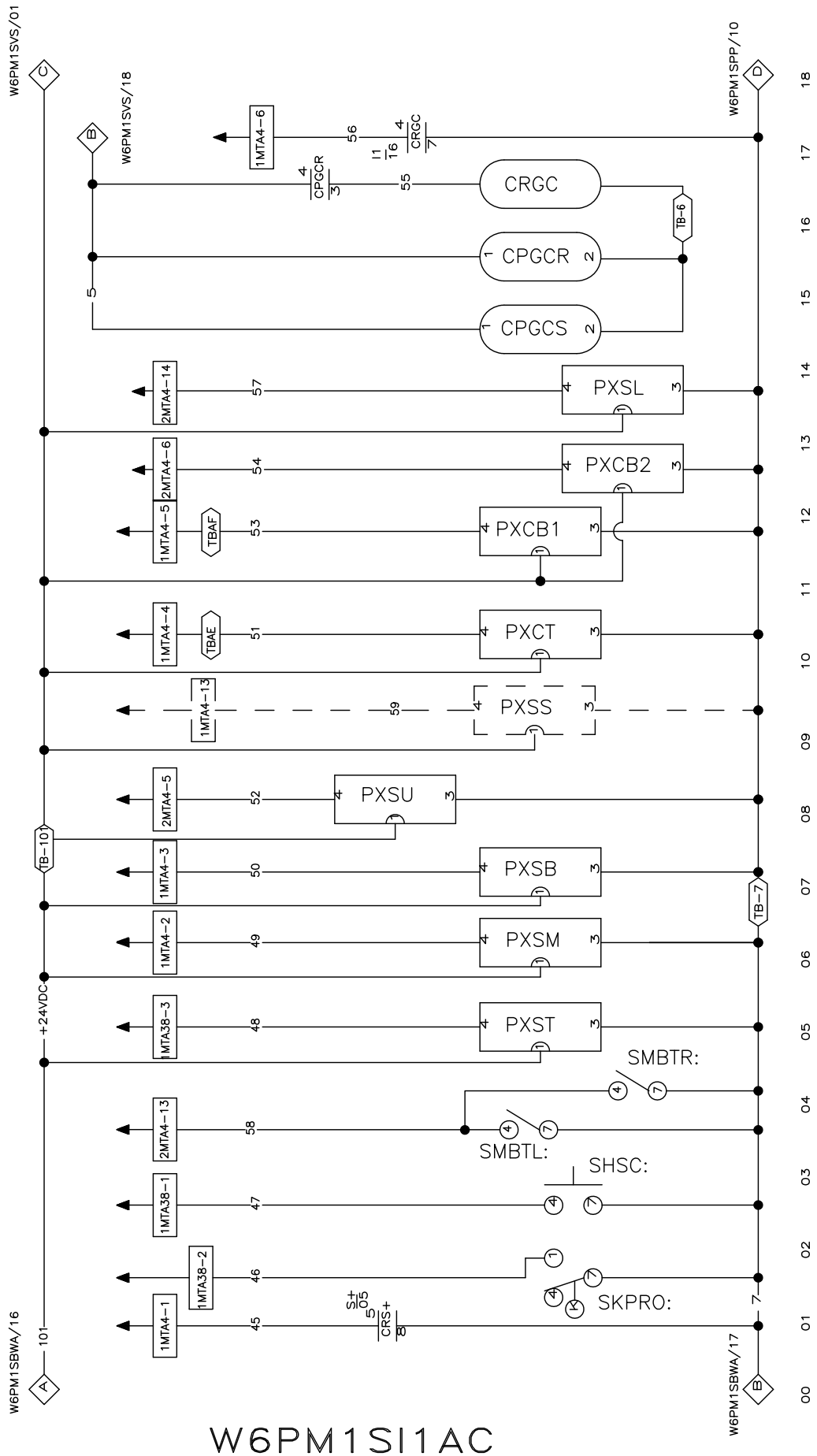

Inputs
输入

W6PM1SI1AC

PELLERIN MILNOR CORPORATION

2018486A

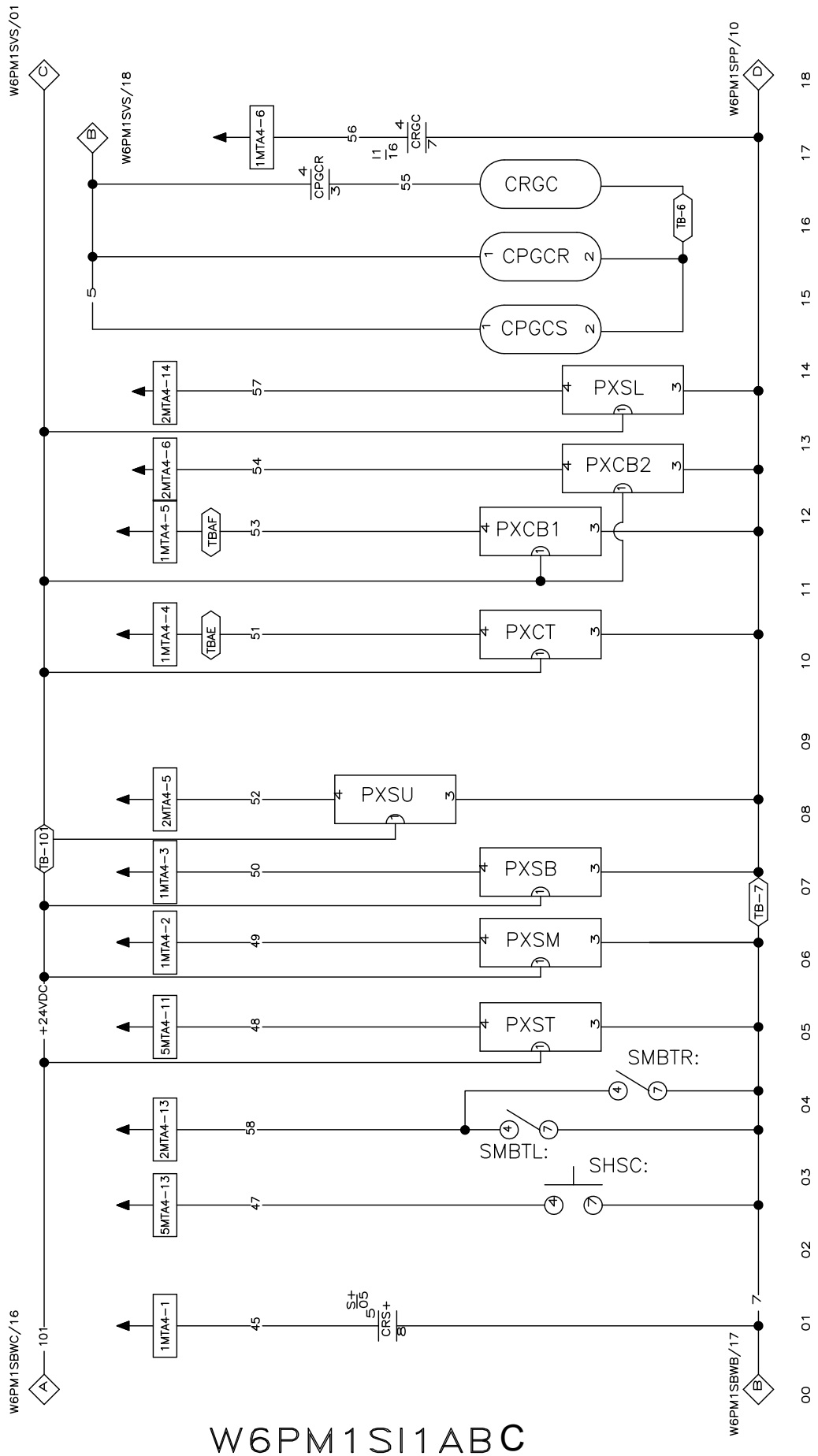

Inputs
输入

W6PM1SI1ABC

PELLERIN MILNOR CORPORATION

2018512A

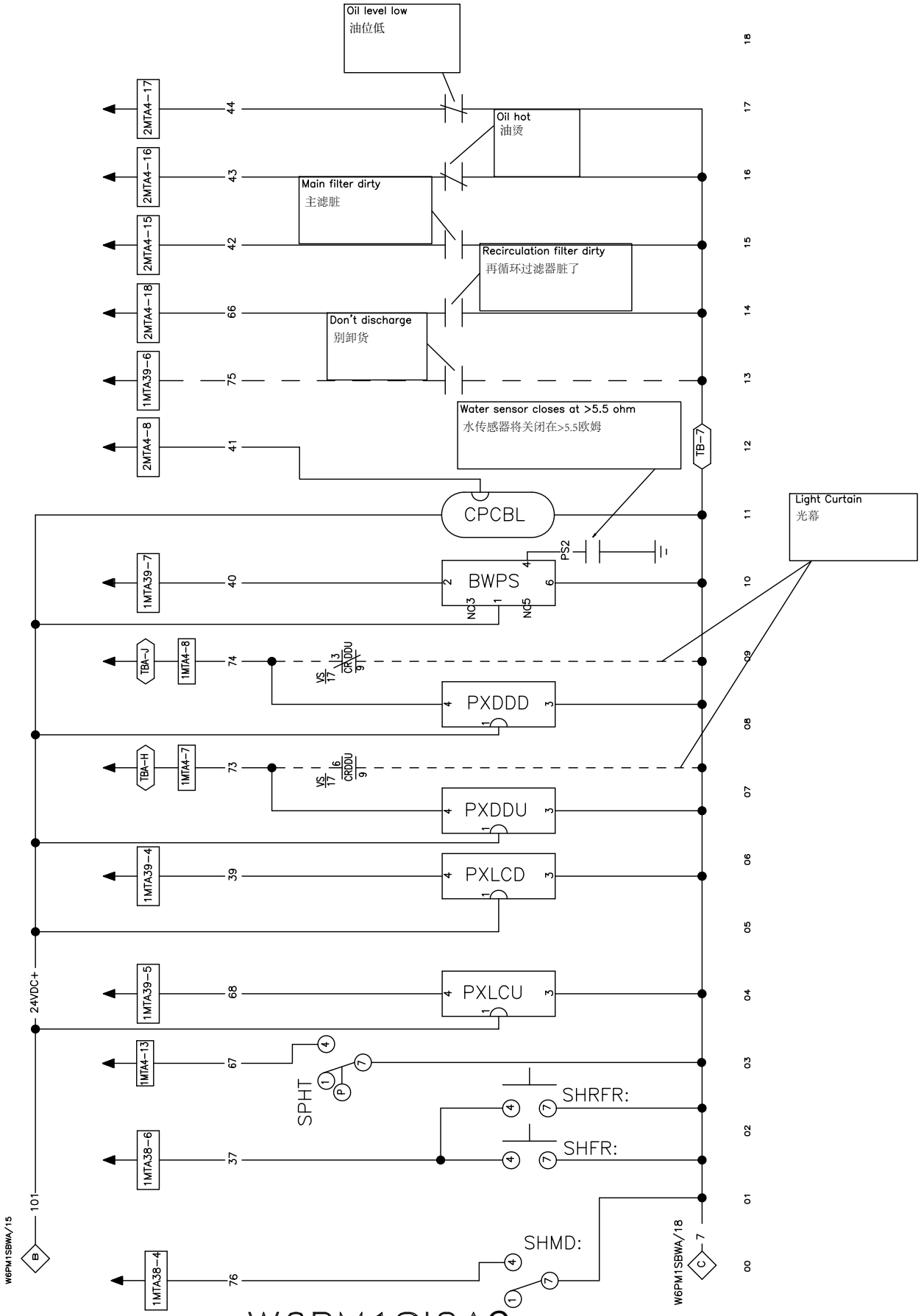
Oil level low
油位低
Oil hot
油烫
Main filter dirty
主滤脏
Recirculation filter dirty
再循环过滤器脏了
Don't discharge
别卸货
Water sensor closes at >5.5 ohm
水传感器将关闭在>5.5欧姆
Light Curtain
光幕
2MTA4-17
2MTA4-16
2MTA4-15
2MTA4-18
1MTA39-6
2MTA4-8
1MTA39-7
TBA-J
1MTA4-8
TBA-H
1MTA4-7
1MTA39-4
1MTA39-5
1MTA4-13
1MTA38-6
1MTA38-4
TB-7
CPCBL
PS2
BWPS
NC3
NC5
PXDDD
PXDDU
PXLCD
PXLCU
24VDC+
SPHT
SHRFR:
SHFR:
SHMD:
W6PM1SBWA/15
W6PM1SBWA/18
W6PM1SI2AC
PELLERIN MILNOR CORPORATION
2021053A

Inputs
输入

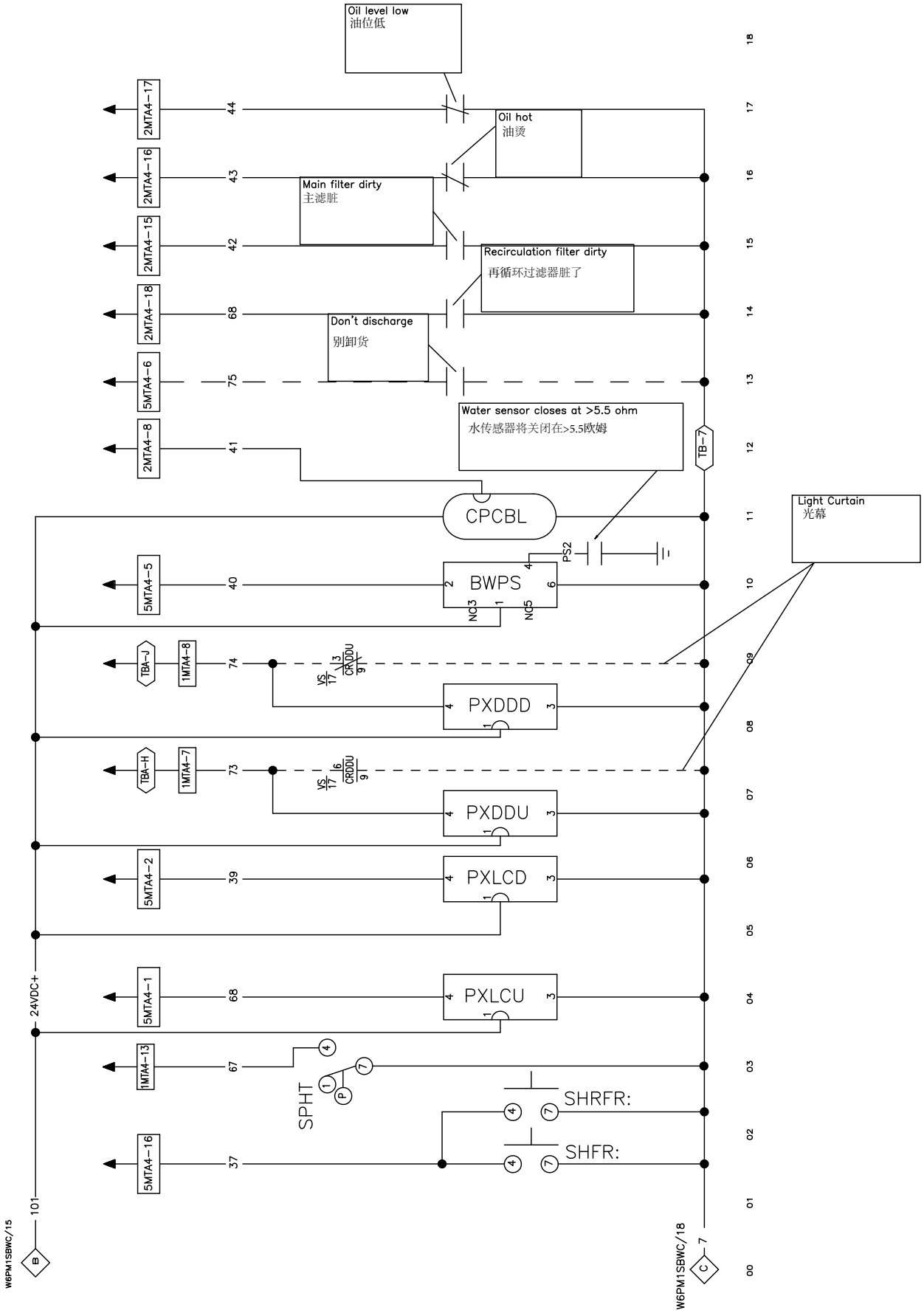

W6PM1SI2BC

PELLERIN MILNOR CORPORATION

2021053A

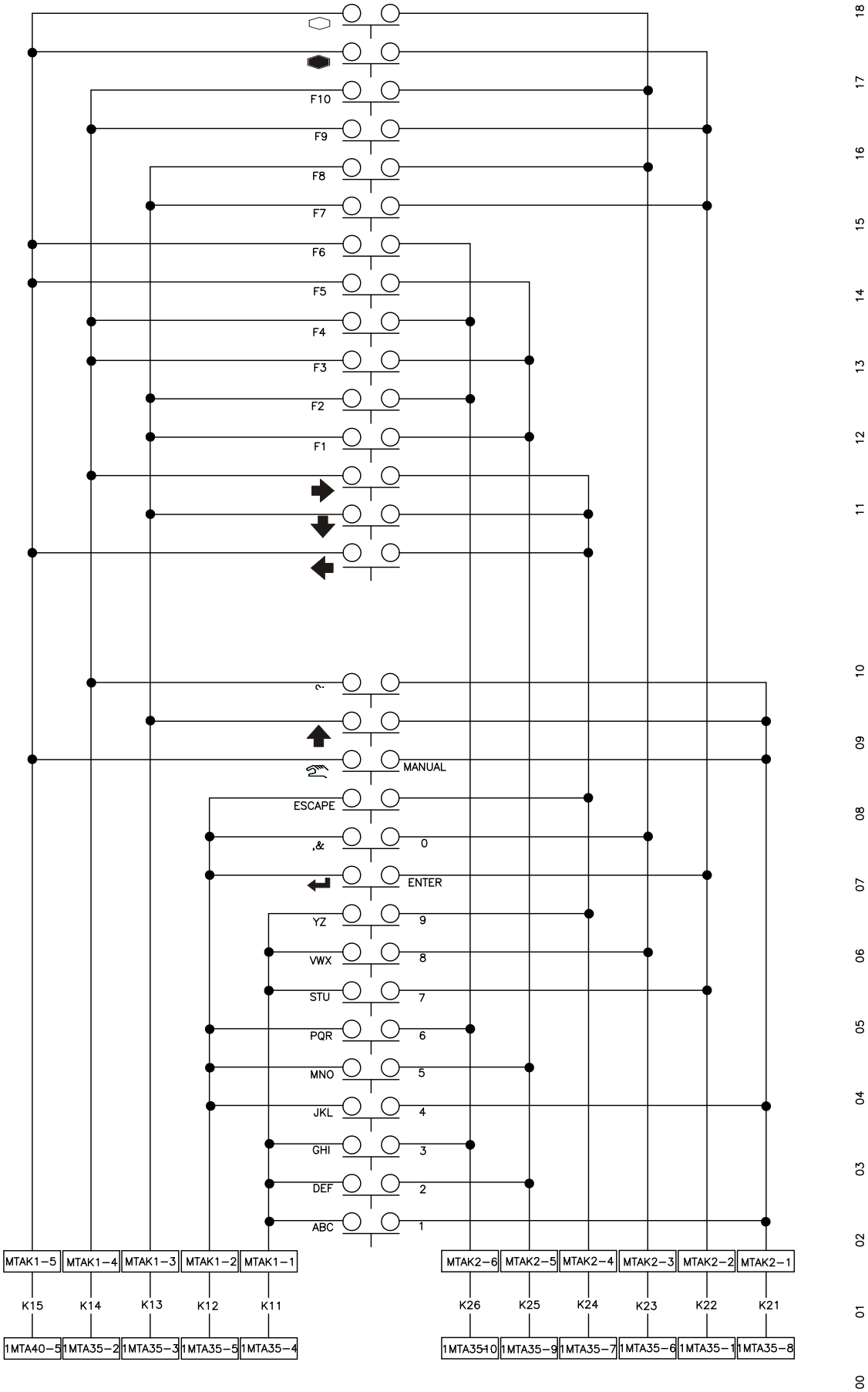

W6PM1SKPAC

Keypad
键盘

PELLERIN MILNOR CORPORATION

2007285A

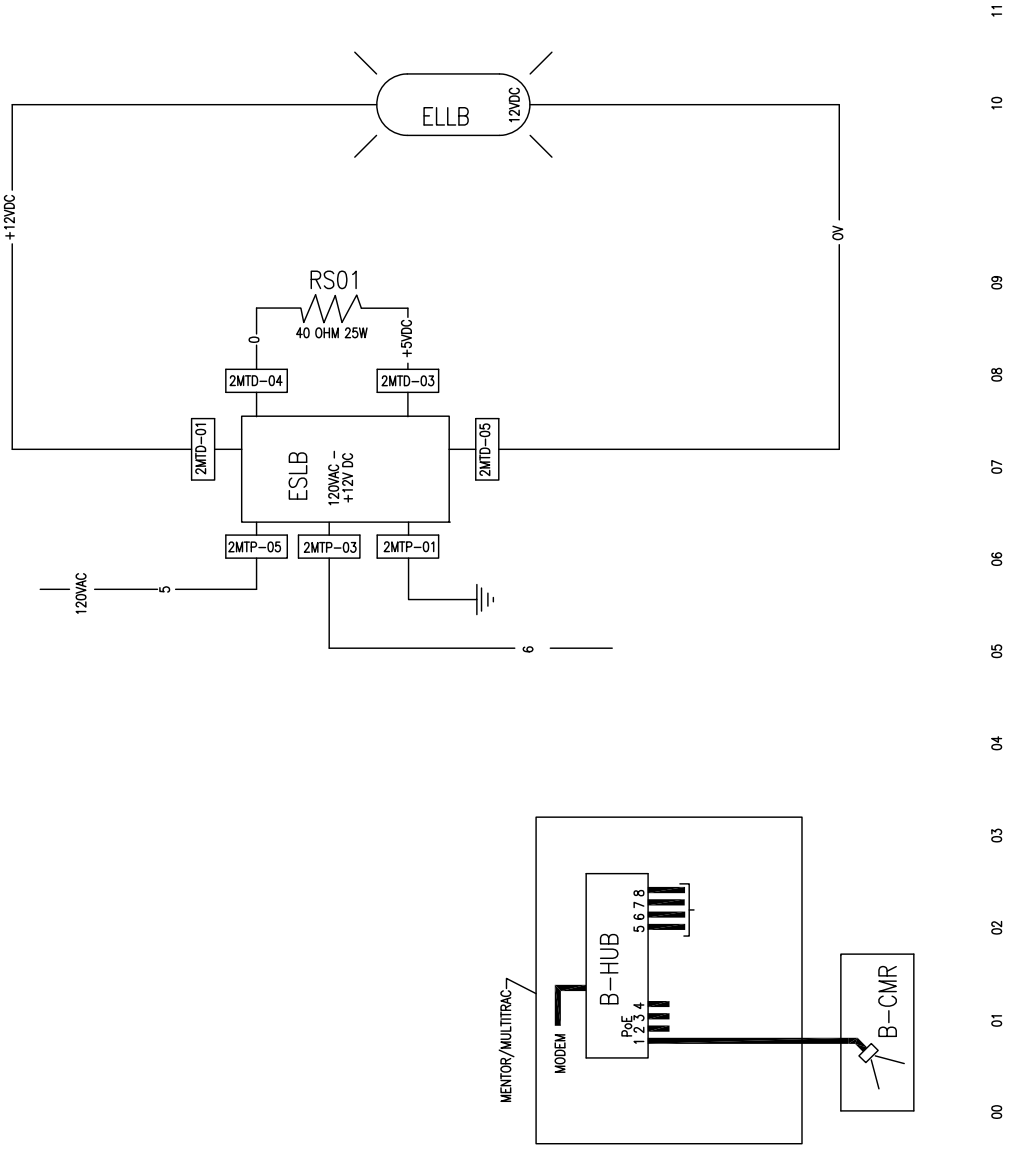

Light
光

W6PM1SLBC

PELLERIN MILNOR CORPORATION

2023112A

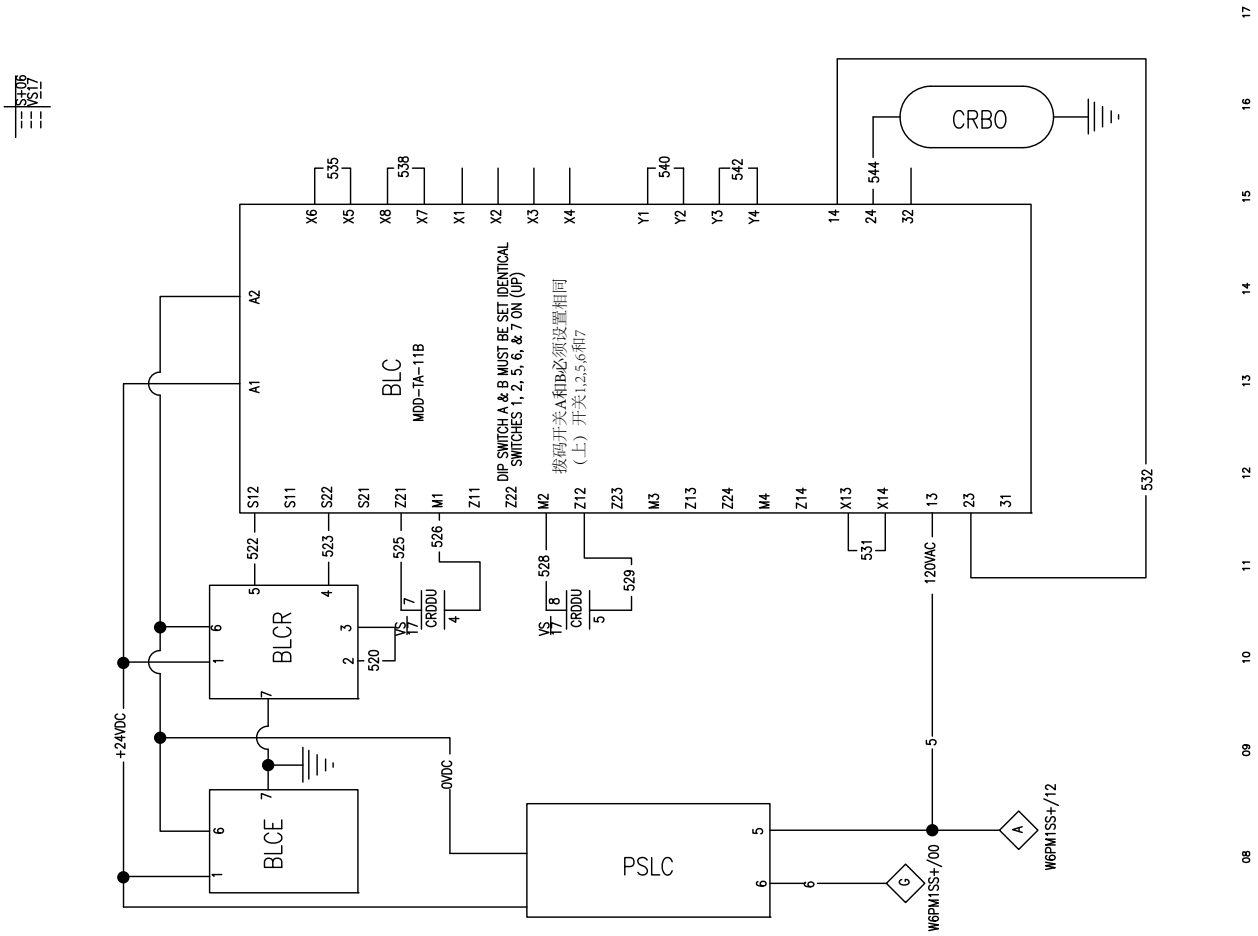

Light Curtain
光幕

W6PM1SLCC

PELLERIN MILNOR CORPORATION

2021346A

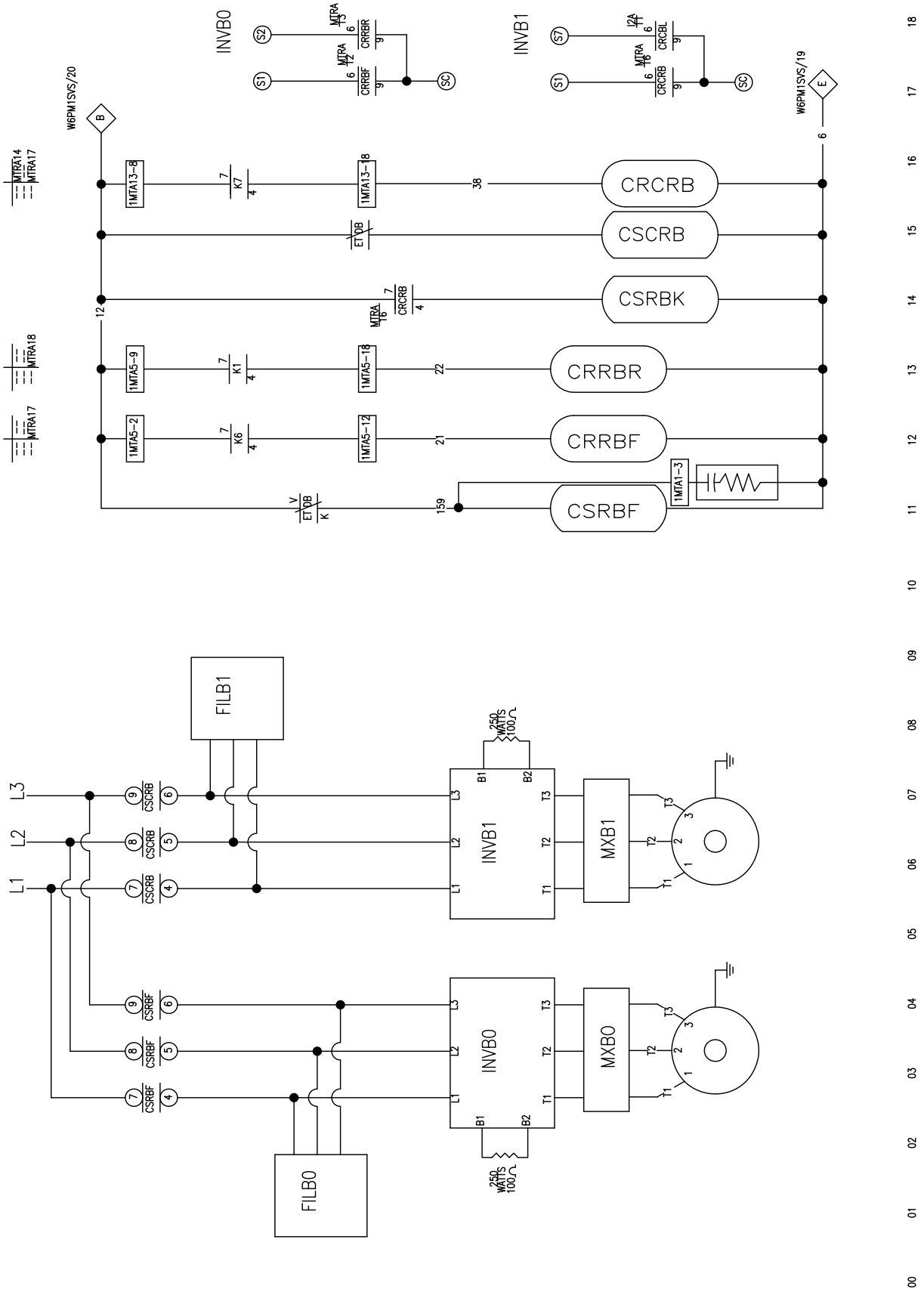

Inverter belt motor wiring
逆变器带马达接线

W6PM1SMTRAC

PELLERIN MILNOR CORPORATION

2021053A

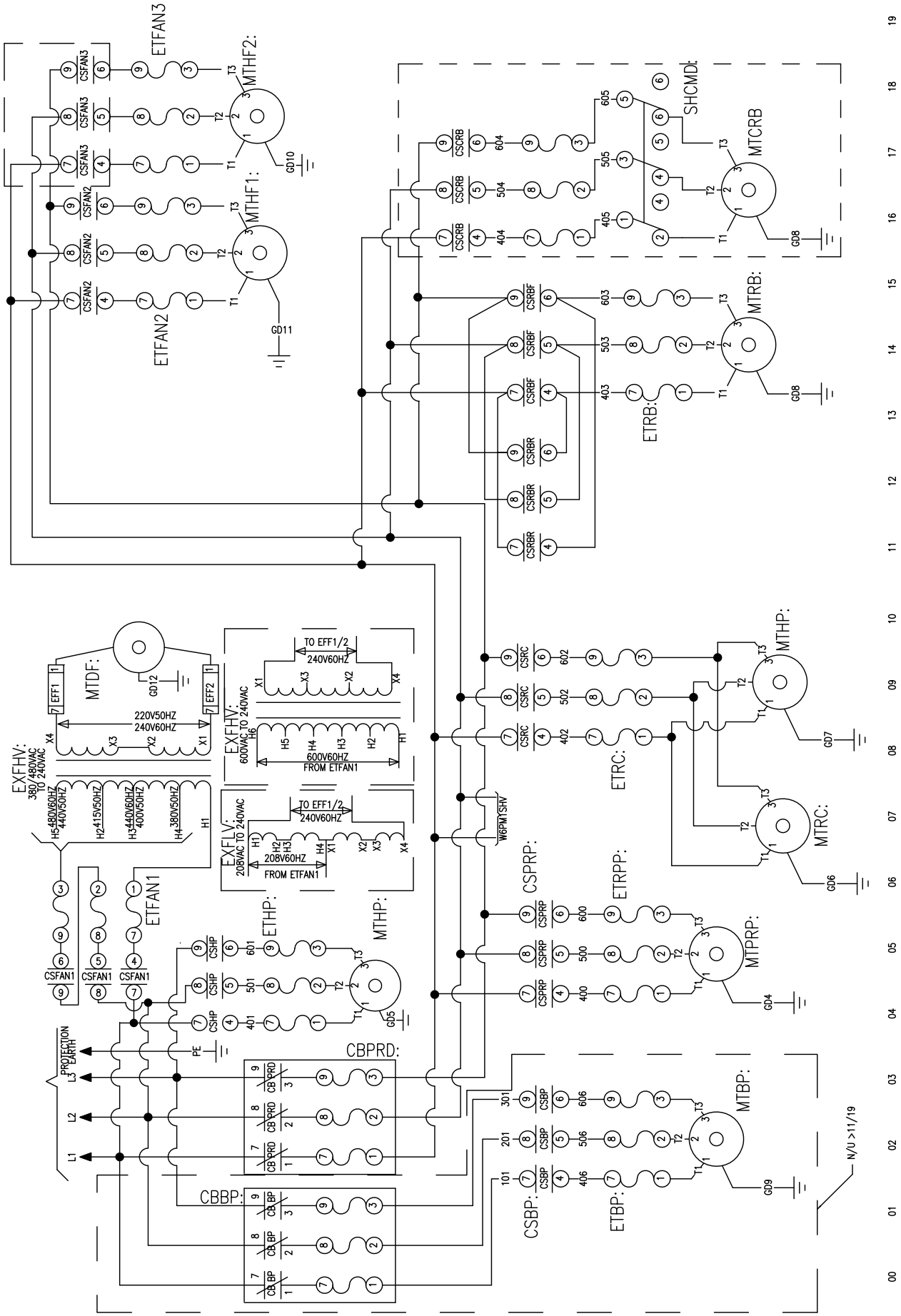

W6PM1SMTRC

PELLERIN MILNOR CORPORATION

Motors
马达接线

2024334A

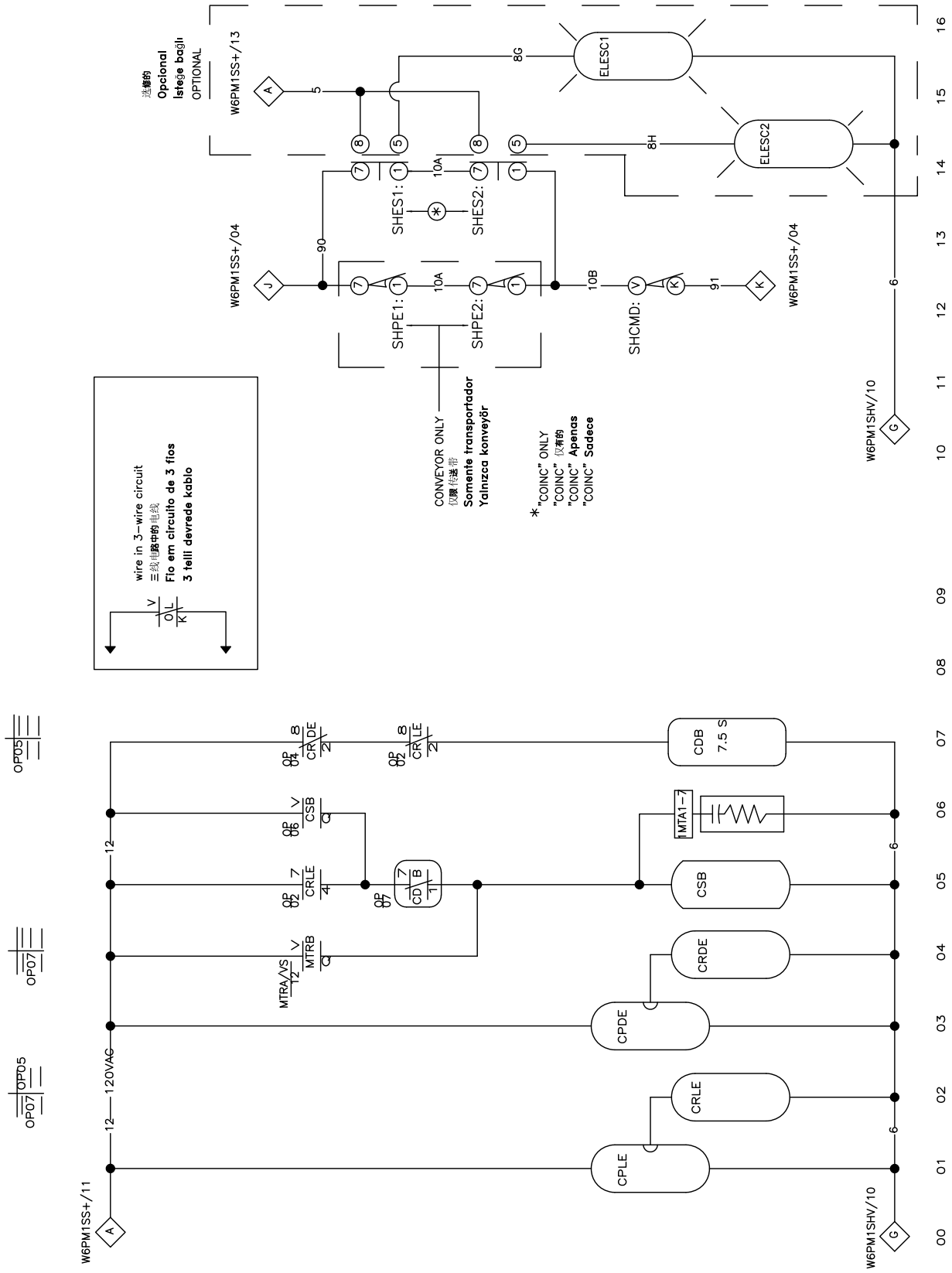

Discharge conveyor
卸料输送机
Transportador de descarga
Boşaltma Konveyörü

W6PM1SOPX

PELLERIN MILNOR CORPORATION

2025154A

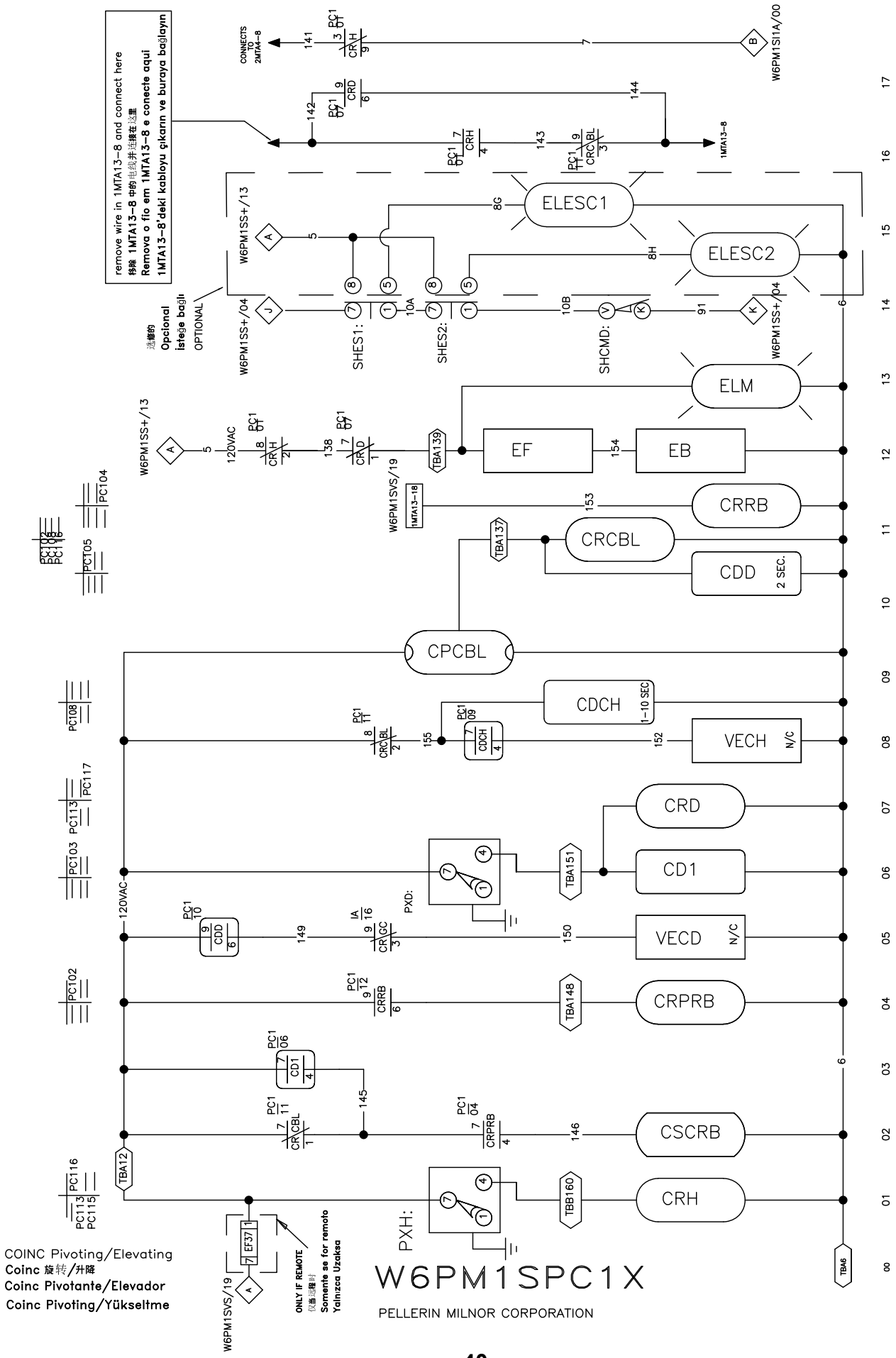
remove wire in 1MTA13-8 and connect here
移除 1MTA13-8 中的电线并连接在这里
Remova o fio em 1MTA13-8 e conecte aqui
1MTA13-8'deki kabloyu çıkarın ve buraya bağlayın
CONNECTS TO 2MTA4-8
W6PM1SI1A/00
1MTA13-8
W6PM1SS+/13
W6PM1SS+/04
OPTIONAL
选修的
Opcional
isteğe bağlı
SHES1:
SHES2:
SHCMD:
ELESC1
ELESC2
ELM
EF
EB
CRRB
CRCBL
CDD
2 SEC.
CPCBL
CDCH
1-10 SEC
VECH
N/C
CRD
CD1
VECD
CRPRB
CSCRB
CRH
120VAC
W6PM1SVS/19
1MTA13-18
TBA139
TBA137
TBA151
TBA148
TBB160
TBA12
TBA6
PXD:
PXH:
ONLY IF REMOTE
仅当远程时
Somente se for remoto
Yalnızca Uzaksa
COINC Pivoting/Elevating
Coinc 旋转/升降
Coinc Pivotante/Elevador
Coinc Pivoting/Yükseltme
W6PM1SPC1X
PELLERIN MILNOR CORPORATION
2025154A

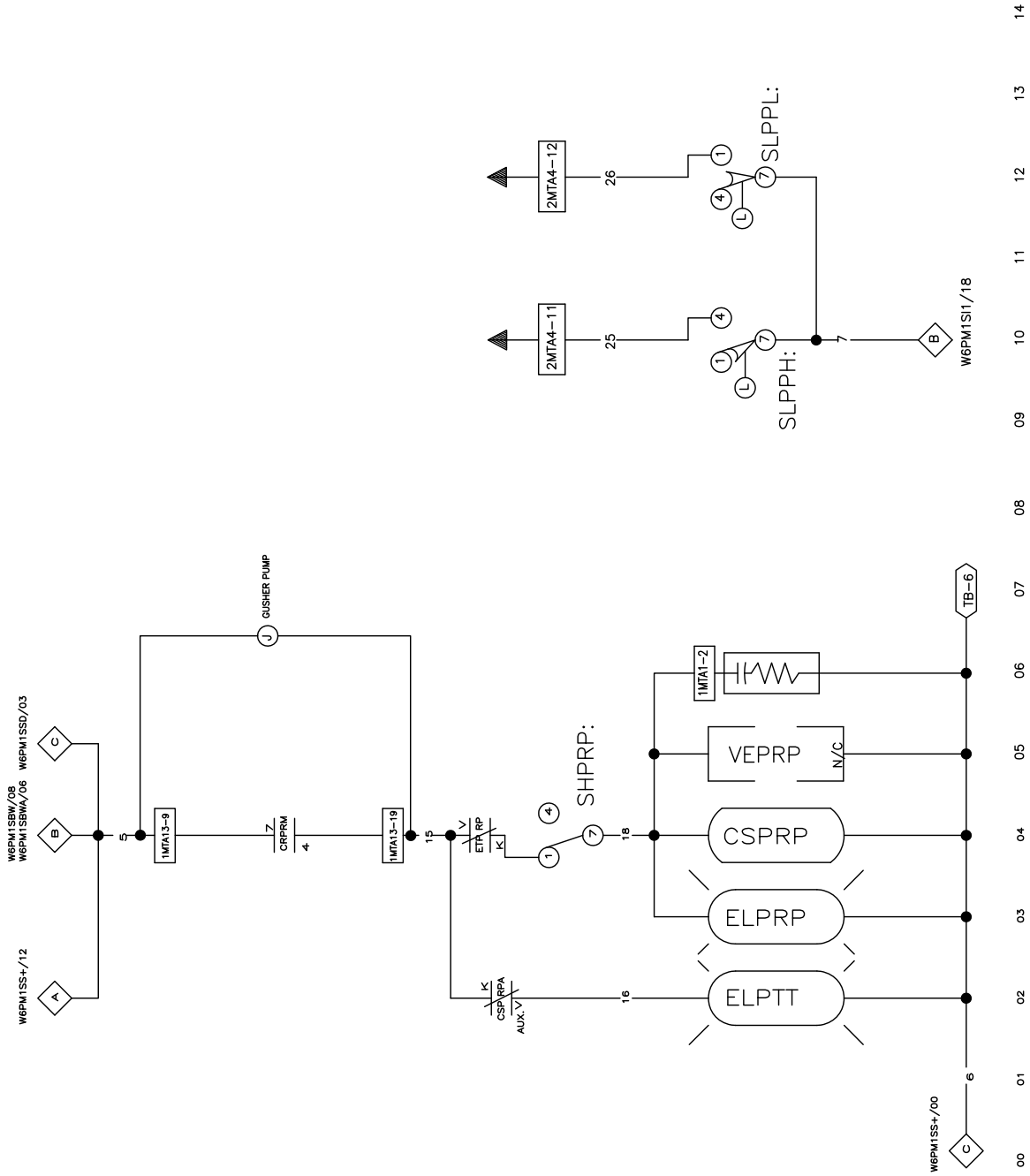

Press Pump
洗衣店压机抽水机

W6PM1SPPC

PELLERIN MILNOR CORPORATION

2017245A

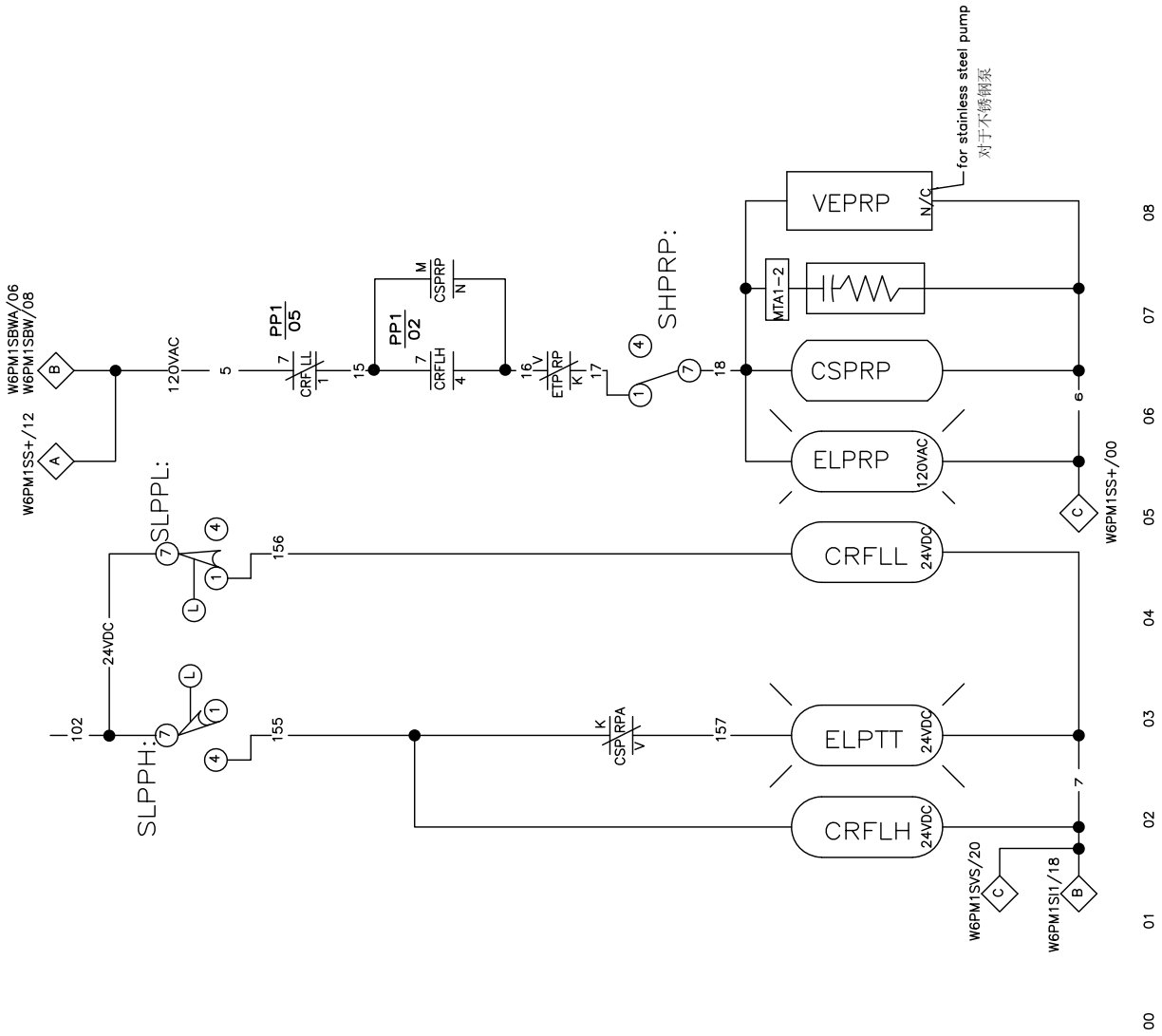

W6PM1SPP1C

Return pump+conductivity probes

（回流泵）电导率探头

PELLERIN MILNOR CORPORATION

2024053A

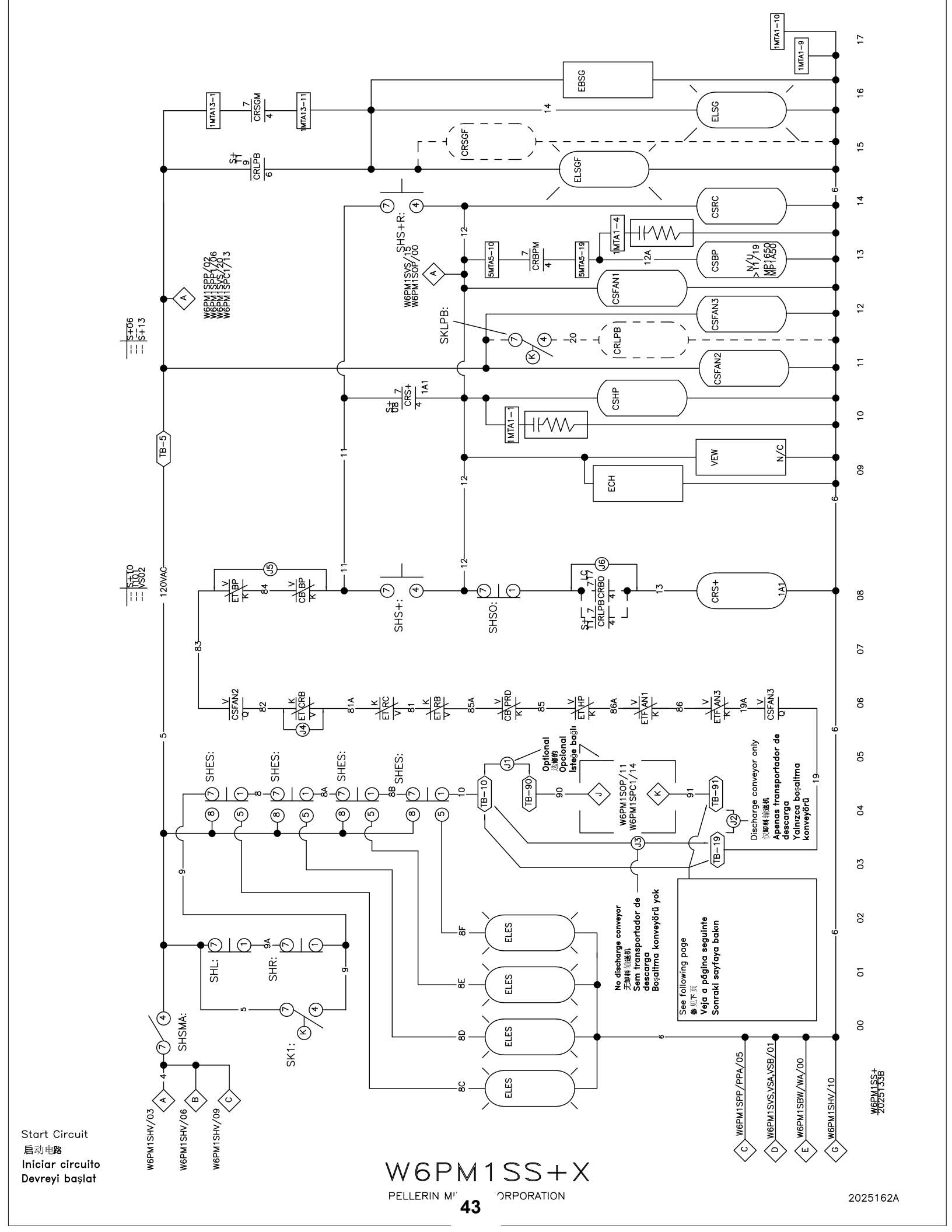
Start Circuit
启动电路
Iniciar circuito
Devreyi başlat
W6PM1SS+X
PELLERIN MI ORPORATION
43
2025162A
W6PM1SS+
2025153B
120VAC
TB-5
S+06
S+13
S+10
S+01
S+02
W6PM1SPP/02
W6PM1SPA/06
W6PM1SPC/13
W6PM1SHV/03
W6PM1SHV/06
W6PM1SHV/09
SHSMA:
SK1:
SHL:
SHR:
SHES:
SHS+:
SHSO:
SHS+R:
SKLPB:
W6PM1SVS/13
W6PM1SOP/00
W6PM1SOP/11
W6PM1SPC1/14
W6PM1SPP/PPA/05
W6PM1SVS,VSA,VSB/01
W6PM1SBW/WA/00
W6PM1SHV/10
ELES
TB-10
TB-90
TB-91
TB-19
Optional
选择的
Opcional
İstege bağlı
No discharge conveyor
无卸料输送机
Sem transportador de descarga
Boşaltma konveyörü yok
Discharge conveyor only
仅卸料输送机
Apenas transportador de descarga
Yalnızca boşaltma konveyörü
See following page
参见下页
Veja a página seguinte
Sonraki sayfaya bakın
CSFAN2
CSFAN3
CRS+
CRLPB
CRLPBO
ETHP
ETFAN1
ETFAN3
CSFAN1
CSFAN2
CSFAN3
CSHP
CSRC
CSBP
ELSGF
ELSG
EBSG
ECH
VEW
N/C
CRSGF
CRLPB
CRSGM
CRBPM
1MTA13-1
1MTA13-11
1MTA1-1
1MTA1-4
1MTA1-9
1MTA1-10
5MTA5-10
5MTA5-19
MP1650
A50

EN----------

Serious bodily injury or death can result to personnel in proximity to machinery/systems that transverse, elevate, extend, pivot, and/or tilt. The following mandatory minimum safety requirements must be installed with this machine:

• Safety fence enclosing machine movement areas

• Lockable electrical interlocks on all gates properly interfaced to the terminals shown here, to disable the machine movement when any gate is opened.

• Signs to alert personnel to these hazards placed prominently around fenced in area.

Local codes may have additional requirements.

CH----------

严重的人身伤害或死亡可能会导致人员接近机器/系统的横向，提高，延伸，支点，和/或倾斜。下面的强制性最低安全要求，必须在本机上进行安装：

• 安全围栏封闭机活动区

• 当任何门打开带锁电气联锁禁用机械运动。

• 标志，提醒人员这些危害突出地放在围栏周围的面积。

地方法规可能有额外的要求。

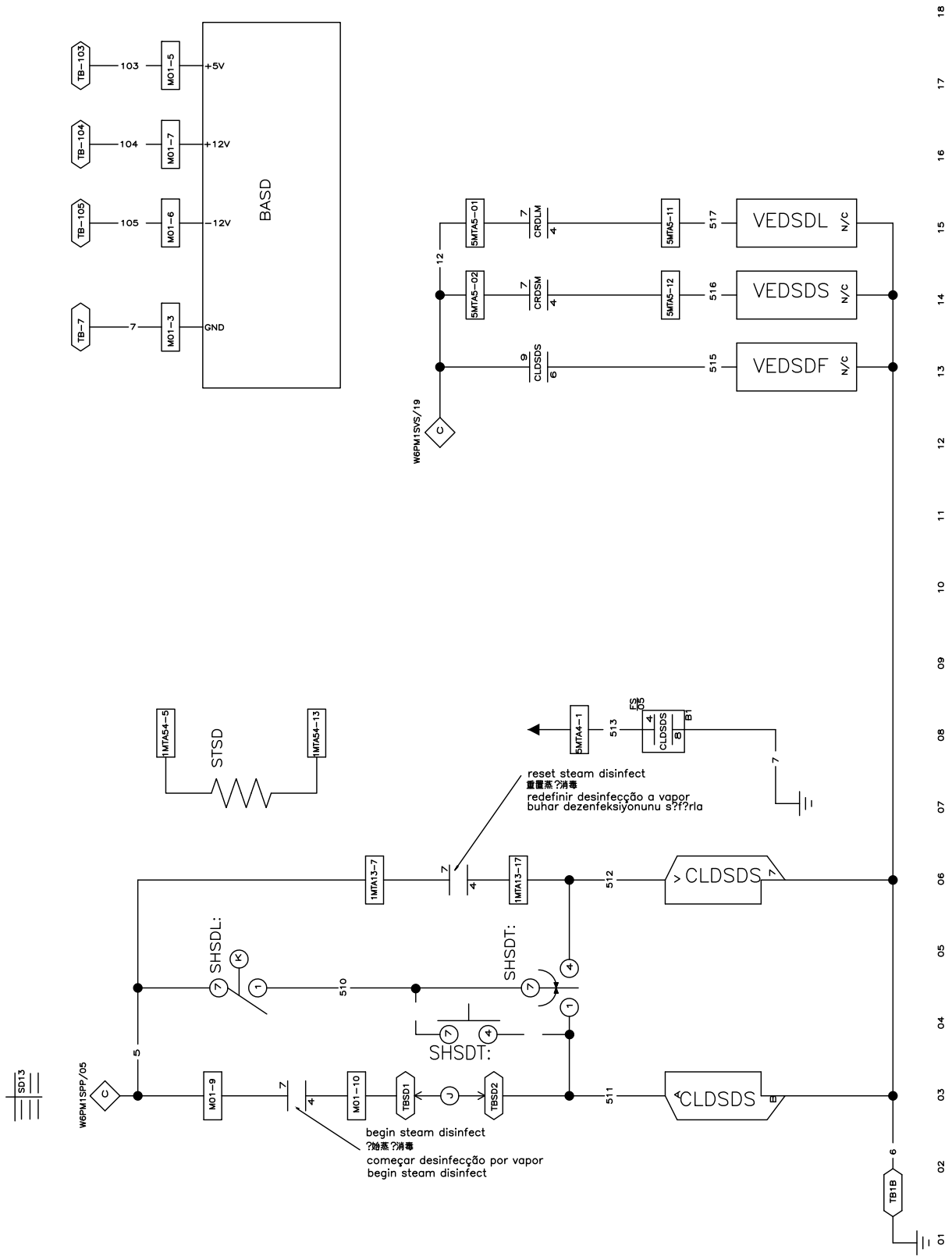

Steam disinfect
蒸?消毒
Desinfecção a vapor
Buhar dezenfeksiyonu

W6PM1SSDX

PELLERIN MILNOR CORPORATION

2025132A

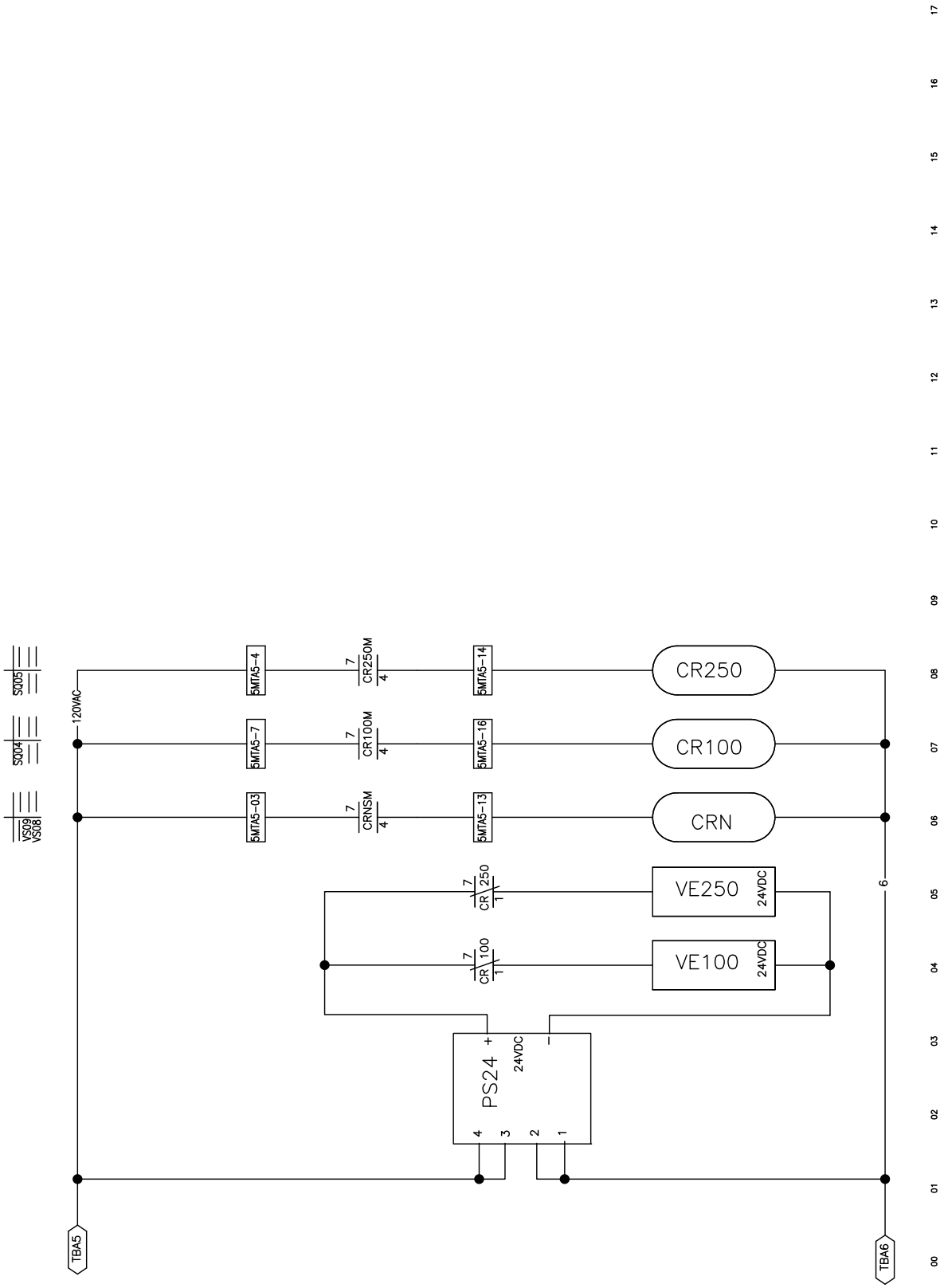

Delicate Care
细腻关怀

W6PM1SSQC

PELLERIN MILNOR CORPORATION

2023352A

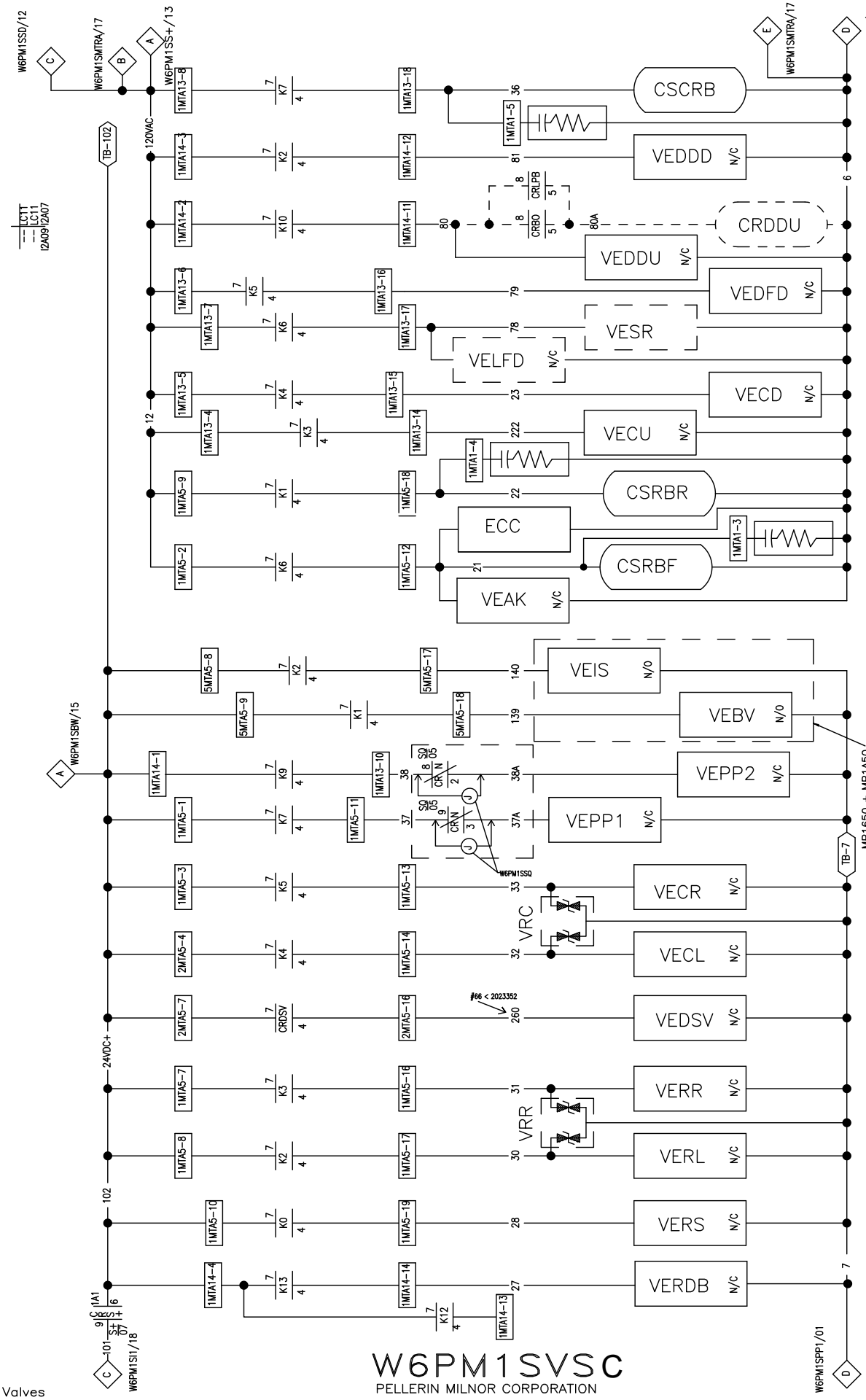
W6PM1SSD/12
W6PM1SMTRA/17
W6PM1SS+/13
W6PM1SMTRA/17
W6PM1SS+/00
TB-102
120VAC
CSCRB
VEDDD N/C
CRDDU
VEDDU N/C
VEDFD N/C
VESR
VELFD N/C
VECD N/C
VECU N/C
CSRBR
ECC
CSRBF
VEAK N/C
VEIS N/O
VEBV N/O
VEPP2 N/C
VEPP1 N/C
W6PM1SSQ
VRC
VECR N/C
VECL N/C
#66 < 2023352
VEDSV N/C
VERR N/C
VRR
VERL N/C
VERS N/C
VERDB N/C
W6PM1SBW/15
24VDC+
102
MP1650 + MP1A50
TB-7
W6PM1SI1/18
W6PM1SPP1/01
W6PM1SVSC
PELLERIN MILNOR CORPORATION
2024093A

Valves
阀门

English-Portuguese / língua Inglesa-idioma portugues

2

The text in this Circuit Guide is provided in the following languages:

1. **English**
2. Portuguese

O texto neste circuito guia é fornecido nos seguintes idiomas:

1. Inglês
2. **Português**

Read the separate safety manual before installing, operating, or servicing

---

Leia o manual separado de segurança antes de instalar, funcionar ou fazer a manutenção.

How to Get the Necessary Repair Components

You can get components to repair your machine from the approved supplier where you got this machine. Your supplier will usually have the necessary components in stock. You can also get components from the Milnor® factory.

Tell the supplier the machine model and serial number and this data for each necessary component:

- The component number from this manual
- The component name if known
- The necessary quantity
- The necessary transportation requirements
- The schematic number
- If the component is a motor or electrical control, give the nameplate data from the used component.

To write the Milnor factory:

Pellerin Milnor Corporation
Post Office Box 400
Kenner, LA 70063-0400
United States

Telephone: 504-467-2787
Fax: 504-469-9777
Email: parts@milnor.com

Como Obter os Componentes de Manutenção Necessários

Você pode obter componentes para consertar a sua máquina do fornecedor aprovado onde adquiriu esta máquina. O seu fornecedor geralmente terá os componentes necessários em estoque. Você também pode obter componentes da fábrica Milnor.

Informe ao fornecedor, o modelo e o número de série da máquina e estes dados para cada componente necessário:

- O número do componente fornecido neste manual
- O nome do componente, se conhecido
- A quantidade necessária
- Os requisitos de transporte necessários
- O número da visão esquemática
- Se o componente for um motor ou controle elétrico, forneça os dados da placa de identificação do componente usado

Para entrar em contato com a fábrica Milnor por escrito:

Pellerin Milnor Corporation
caixa postal 400
Kenner, LA 70063-0400
Estados Unidos

telefone: 504-467-2787
Fax: 504-469-9777
E-mail: parts@milnor.com

BA		
BAD-1	W6PM1SBW	08BSADCT
BAD-1	W6PM1SBWB	08BSADCT
BAD-1	W6PM1SBWC	08BSADCT
BAD-1	W6PM1SBWD	08BSADCT
BASD	W6PM1SSD	08B1BSDT
BBB-1	W6PM1SBW	08BSBB1T
BBB-1	W6PM1SBWB	08BSBB1T
BBB-1	W6PM1SBWC	08BSBB1T
B-CMR	W6PM1SLB	08BAMVNC
BDA-1	W6PM1SBW	08BSDACHT
BDA-1	W6PM1SBWB	08BSDACHT
BDA-1	W6PM1SBWC	08BSDACHT
BDA-1	W6PM1SBWD	08BSDACHT
BDFP	W6PM1SEC	08EFD320C
BDVFD	W6PM1SD	08BSEVFD5U
BDVFD	W6PM1SD	08BSEVFD5V
BFPC	W6PM1SEC	08EFD320C
BFPI	W6PM1SEC	08BSEDIFAT
BIO-1	W6PM1SBW	08BS816CT
BIO-1	W6PM1SBWB	08BS816CT
BIO-1	W6PM1SBWC	08BS816CT
BIO-1	W6PM1SBWD	08BS816CT
BIO-2	W6PM1SBW	08BS816CT
BIO-2	W6PM1SBWB	08BS816CT
BIO-2	W6PM1SBWC	08BS816CT
BIO-2	W6PM1SBWD	08BS816CT
BIO-3	W6PM1SBW	08BS816CT
BIO-3	W6PM1SBWB	08BS816CT
BIO-3	W6PM1SBWC	08BS816CT
BIO-3	W6PM1SBWD	08BS816CT
BIO-4	W6PM1SBWB	08BS816CT
BIO-4	W6PM1SBWC	08BS816CT
BIO-4	W6PM1SBWD	08BS816CT
BIO-5	W6PM1SBWC	08BS816CT
BIO-5	W6PM1SBWD	08BS816CT
BMTH	W6PM1SBW	08BS5MTHAT
BMTH	W6PM1SBWB	08BS8MTHAT
BMTH	W6PM1SBWC	08BS8MTHAT
BMTH	W6PM1SBWD	08BS8MTHAT
BO24-1	W6PM1SBW	08BSO24AT
BO24-1	W6PM1SBWB	08BSO24AT
BO24-1	W6PM1SBWC	08BSO24AT
BO24-1	W6PM1SBWD	08BSO24AT
BPB	W6PM1SBW	08BSPDT
BPB	W6PM1SBWB	08BSPE2T
BPB	W6PM1SBWC	08BHGQ7BS
BPB	W6PM1SBWD	08BHMX6LAT
BPC-1	W6PM1SBW	96RH708A3T
BPC-1	W6PM1SBWB	96RH708A3T

BWPS	W6PM1SI2	08BNWPSAT
BWPS	W6PM1SI2A	08BNWPSAT
BWPS	W6PM1SI2B	08BNWPSAT
CB		
CBFAN1	W6PM1SMTR	09FTB010T
CBPRD	W6PM1SMTR	09FTB016T
CD		
CD1	W6PM1SPC1	09CF002037
CDCH	W6PM1SPC1	09CA0100A37
CDD	W6PM1SPC1	09CF002037
CL		
CLDSDS <3-2025	W6PM1SSD	09CL2C-C37
CLDSDS >3-2025	W6PM1SSD	09CL2C-D37
CP		
CPCBL	W6PM1SI2	09RPE011
CPCBL	W6PM1SI2A	09RPE011
CPCBL	W6PM1SI2B	09RPE011
CPGCR	W6PM1SI1	09RPE010R
CPGCR	W6PM1SI1A	09RPE010R
CPGCR	W6PM1SI1B	09RPE010R
CPGCS	W6PM1SI1	09RPE010E
CPGCS	W6PM1SI1A	09RPE010E
CPGCS	W6PM1SI1B	09RPE010E
CPLC	W6PM1SLC	09RPE018LBA
CPLCC	W6PM1SLC	09RPE018LBC
CR		
CR100	W6PM1SSQ	09C024D37
CR250	W6PM1SSQ	09C024D37
CRBO	W6PM1SLC	09C024D37
CRCBL	W6PM1SPC1	09C024D37
CRD	W6PM1SPC1	09C024D37
CRDDU	W6PM1SVS	09C024D37
CRFLH	W6PM1SPP1	09C024D24
CRFLL	W6PM1SPP1	09C024D24
CRGC	W6PM1SI1	09C024D37
CRGC	W6PM1SI1A	09C024D37
CRGC	W6PM1SI1B	09C024D37
CRH	W6PM1SPC1	09C024D37
CRN	W6PM1SSQ	09C024D37
CRPRB	W6PM1SPC1	09C024D37
CRRB	W6PM1SPC1	09C024D37
CRS+	W6PM1SS+	09C024D37
CRSGG	W6PM1SS+	09C024D37
CS		
CSA	W6PM1SPC1	09MC08B337
CSCRB	W6PM1SVS	09MC08B337
CSFAN1	W6PM1SS+	09MC08B337
CSFAN2	W6PM1SS+	09MC08B337
CSFAN3	W6PM1SS+	09MC08B337
CSHP(MP16xx-H)	W6PM1SS+	09MC08G337

CSHP(MP16xx-L)	W6PM1SS+	09MC08L337
CSHP(MP1Axx-H)	W6PM1SS+	09MC08L337
CSHP(MP1Axx-L)	W6PM1SS+	09MC08U337
CSPRP	W6PM1SMTR	09MC08B337
CSRBF	W6PM1SVS	09MC08B337
CSRBR	W6PM1SVS	09MC08B337
CSRC	W6PM1SS+	09MC08C337
EB		
EBSG	W6PM1SS+	09H015
EC		
ECC	W6PM1SVS	38C201
ECH	W6PM1SS+	38C202
EF		
EF1	W6PM1SHV	09FF005AWN
EF2	W6PM1SHV	09FF005AWN
EF37	W6PM1SHV	09FF006AMA
EFF1	W6PM1SMTR	09FF002AWN
EFF2	W6PM1SMTR	09FF002AWN
EL		
ELES	W6PM1SS+	09N507E
ELES	W6PM1SS+	09N507E
ELES	W6PM1SS+	09N507E
ELES	W6PM1SS+	09N507E
ELLB	W6PM1SLB	09J092A12
ELM	W6PM1SPC1	09H025V37
ELPRP	W6PM1SPP	09J060A37
ELPRP	W6PM1SPP1	09J060A37
ELPTT	W6PM1SPP	09J060A37
ELPTT	W6PM1SPP1	09J060A24
ELSG	W6PM1SS+	09J060WH37
ELSGF	W6PM1SS+	09H025V37
ES		
ES24	W6PM1SBW	08PSL10C224
ES24	W6PM1SBWB	08PSL10C224
ES24	W6PM1SBWC	08PSL10C224
ES24	W6PM1SSQ	08PSL10C224
ES24	W6PM1SBWD	08PSL10C224
ESLB	W6PM1SLB	08PSS3401T
ESLC	W6PM1SLC	09RPE018LBD
ESPS	W6PM1SBW	08PSS3401T
ESPS	W6PM1SBWB	08PSS3401T
ESPS	W6PM1SBWC	08PSS3401T
ESPS	W6PM1SBWD	08PSS3401T
ESPS2	W6PM1SBWC	08PSS2401T
ESPS2	W6PM1SBWD	08PSS2402
ET		
ETCRB	W6PM1SMTR	09FTD0037T
ETFAN1	W6PM1SMTR	09FTD0010T
ETFAN2	W6PM1SMTR	09FTD0010T
ETFAN3	W6PM1SMTR	09FTD0010T

ETHP(MP16xx-H)	W6PM1SMTR	09FTD0121T
ETHP(MP16xx-L)	W6PM1SMTR	09FTD0230T
ETHP(MP1Axx-H)	W6PM1SMTR	09FTD0230T
ETHP(MP1Axx-L)	W6PM1SMTR	09FTD0040T
ETPRP	W6PM1SMTR	09FTD0037T
ETRB	W6PM1SMTR	09FTD0037T
ETRC	W6PM1SMTR	09FTC0016T
EVFLV	W6PM1SMTR	09UA050A32
EX		
EX37	W6PM1SHV	09UA050A37
EX37	W6PM1SHV	09UA050AAB
EX37	W6PM1SHV	09UA050A98
EXFHV	W6PM1SMTR	09UA050AAB
EXFHV	W6PM1SMTR	09UA050B98
KB		
KBMP	W6PM1SKP	08ND0206N
KBMP	W6PM1SKPA	08ND5X6GC
MT		
MTCRB	W6PM1SMTR	MESSAGE SN
MTDF	W6PM1SMTR	13AF210071
MTHF1	W6PM1SMTR	MESSAGE SN
MTHF2	W6PM1SMTR	MESSAGE SN
MTHP	W6PM1SMTR	MESSAGE SN
MTPRP	W6PM1SMTR	MESSAGE SN
MTRB	W6PM1SMTR	MESSAGE SN
MTRC	W6PM1SMTR	MESSAGE SN
PT1	W6PM1SBWB	PT1A/B
PT1	W6PM1SBWC	PT1A/B
PT1	W6PM1SBWD	PT1A/B
PT1A	MP1550/1640/1650	09N700B
PT1B	MP1656/1556	09N700D
PX		
PXCB1	W6PM1SI1	09RPS12ADS
PXCB1	W6PM1SI1A	09RPS12ADS
PXCB1	W6PM1SI1B	09RPS12ADS
PXCB2	W6PM1SI1	09RPS12ADS
PXCB2	W6PM1SI1A	09RPS12ADS
PXCB2	W6PM1SI1B	09RPS12ADS
PXCT	W6PM1SI1	09RPS30ADS
PXCT	W6PM1SI1A	09RPS30ADS
PXCT	W6PM1SI1B	09RPS30ADS
PXDDD	W6PM1SI2	09RPS30ADS
PXDDD	W6PM1SI2A	09RPS30ADS
PXDDD	W6PM1SI2B	09RPS30ADS
PXDDU	W6PM1SI2	09RPS30ADS
PXDDU	W6PM1SI2A	09RPS30ADS
PXDDU	W6PM1SI2B	09RPS30ADS
PXLCD	W6PM1SI2	09RPS30ADS
PXLCD	W6PM1SI2A	09RPS30ADS
PXLCD	W6PM1SI2B	09RPS30ADS

PXLCU	W6PM1SI2	09RPS30ADS
PXLCU	W6PM1SI2A	09RPS30ADS
PXLCU	W6PM1SI2B	09RPS30ADS
PXSB	W6PM1SI1	09RPS18ADS
PXSB	W6PM1SI1A	09RPS18ADS
PXSB	W6PM1SI1B	09RPS18ADS
PXSL	W6PM1SI1A	09RPS18ADS
PXSL	W6PM1SI1B	09RPS18ADS
PXSM	W6PM1SI1	09RPS30ADS
PXSM	W6PM1SI1A	09RPS30ADS
PXSM	W6PM1SI1B	09RPS30ADS
PXSS	W6PM1SI1B	09RPS30ADS
PXST	W6PM1SI1	09RPS30ADS
PXST	W6PM1SI1A	09RPS30ADS
PXST	W6PM1SI1B	09RPS30ADS
PXSU	W6PM1SI1	09RPS30ADS
PXSU	W6PM1SI1A	09RPS30ADS
PXSU	W6PM1SI1B	09RPS30ADS
RS		
RS01	W6PM1SLB	ECEUMTRES
RS02	W6PM1SBWC	ECEUMTRES
RS03	W6PM1SBWC	ECEUV8R
RS03	W6PM1SBWD	ECEUV8R
SH		
SHCMD	W6PM1SMTR	09N042204
SHCMD	W6PM1SS+	09N042204
SHDA	W6PM1SAIA	09N405M210
SHES	W6PM1SS+	09N506
SHES	W6PM1SS+	09N507F
SHES	W6PM1SS+	09N507F
SHES	W6PM1SS+	09N507F
SHES	W6PM1SS+	09N507F
SHESR	W6PM1SS+	09N506
SHFR	W6PM1SI2	09N405PB10
SHFR	W6PM1SI2A	09N405PB10
SHFR	W6PM1SI2B	09N405PB10
SHL	W6PM1SS+	09RS0001
SHMD	W6PM1SI2A	09N405M210
SHMD	W6PM1SI2B	09N405M210
SHPE1	W6PM1SS+	09R014A
SHPE2	W6PM1SS+	09R014A
SHPL	W6PM1SAI	MESSAGE EW
SHPRP	W6PM1SPP	09N405M210
SHPRP	W6PM1SPP1	09N405M210
SHR	W6PM1SS+	09RS0001
SHRFR	W6PM1SI2	09N405PB10
SHRFR	W6PM1SI2A	09N405PB10
SHRFR	W6PM1SI2B	09N405PB10
SHS+	W6PM1SS+	09N405PB10
SHS+R	W6PM1SS+	09N405PB10

SHSC	W6PM1SI1	09N405PY10
SHSC	W6PM1SI1A	09N405PY10
SHSC	W6PM1SI1B	09N405PY10
SHSDL	W6PM1SSD	09N127C
SHSDT	W6PM1SSD	09N405S320
SHSMA	W6PM1SS+	09N405M220
SHSO	W6PM1SS+	09N404PR01
SK		
SKI	W6PM1SS+	09N127C
SKPRO	W6PM1SI1	09N127C
SKPRO	W6PM1SI1A	09N127C
SKPRO	W6PM1SI1B	09N127C
SL		
SLPPH	W6PM1SPP	09R014A
SLPPH	W6PM1SPP1	09R014A
SLPPL	W6PM1SPP	09R014A
SLPPL	W6PM1SPP1	09R014A
SM		
SMBTL	W6PM1SI1A	09RM01209S
SMBTL	W6PM1SI1B	09RM01209S
SMBTR	W6PM1SI1A	09RM01209S
SMBTR	W6PM1SI1B	09RM01209S
SP		
SPHT	W6PM1SI2B	27E7106C
VE		
VE100	W6PM1SSQ	96RH712A02
VE250	W6PM1SSQ	96RH712A02
VEBP	W6PM1SVS	96RH708E37
VEBV	W6PM1SVS	96R302B37
VECD	W6PM1SVS	96R301B37
VECD	W6PM1SVS	96R301B37
VECL	W6PM1SVS	96RH712A01
VECR	W6PM1SVS	96RH712A01
VECU	W6PM1SVS	96R301B37
VEDDD	W6PM1SVS	96R301B37
VEDDU	W6PM1SVS	96R301B37
VEDFD	W6PM1SVS	96R301B37
VEDSDF	W6PM1SSD	96R301B37
VEDSDL	W6PM1SSD	96R301B37
VEHV	W6PM1SBWB	96RH708E39
VEHV	W6PM1SBWC	96RH708E39
VEHV	W6PM1SBWD	96RH708E39
VEIS	W6PM1SVS	96R302B37
VELFD	W6PM1SVS	96R301B37
VEPP1	W6PM1SVS	96RH710E37
VEPP2	W6PM1SVS	96RH710E37
VEPRP	W6PM1SSP	96TCC2AA37
VERDB	W6PM1SVS	96RH713S01C1
VERL	W6PM1SVS	96RH709E37
VERR	W6PM1SVS	96RH709E37

VERS	W6PM1SVS	09RH712E37
VEW	W6PM1SS+	96TDC2AA37
VR		
VRC	W6PM1SVS	09ARC0055J
VRR	W6PM1SVS	09ARC0055J

Legend of Symbols
Legenda dos símbolos

BA = Printed Circuit Board
Placa de circuito impresso

CB = Circuit Breaker
Disjuntor

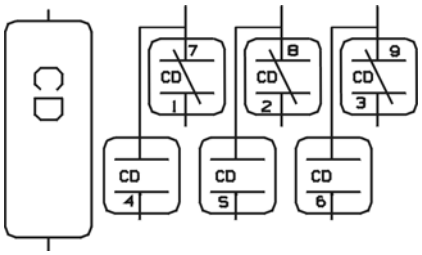

CD = Time Delay Relay
Relé de ação retardada

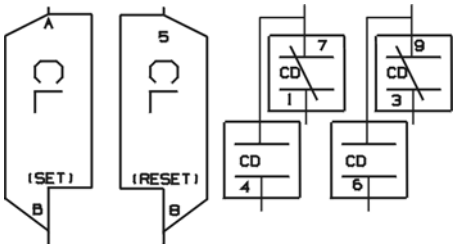

CL = Latch Relay
Relé de trava

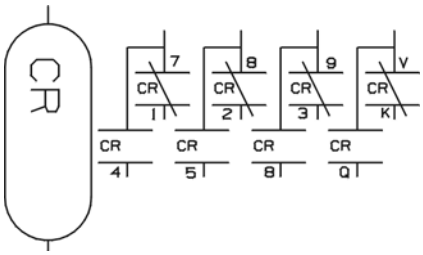

CR = Relay
Relé

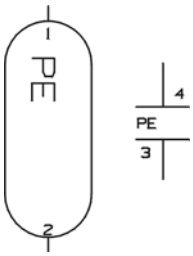

CP = Photo-Eye
Fotoelétrico

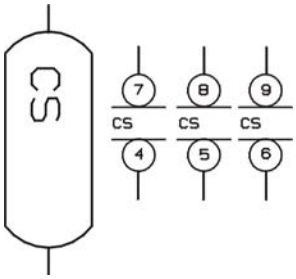

CS = Contactor/Motor Starter
Contator/Arranque do Motor

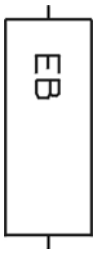

EB = Audible Signal
Sinal Sonoro

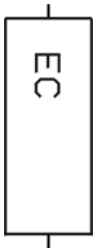

EC = Clutch
Embreagem

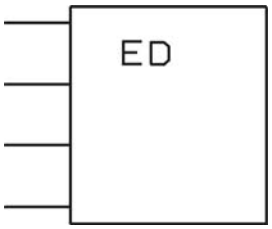

ED = Electronic Display
Tela eletrônica

EF = Fuse
Fusível

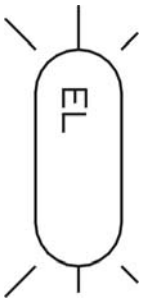

EL = Light
Luz

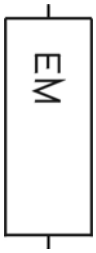

EM = Electro Magnatic Solenoid
Solenoide eletromagnético

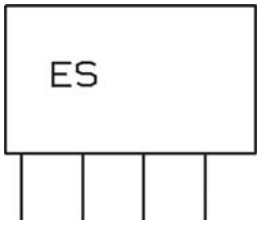

ES = Electronic Power Supply
Fonte de alimentação eletrônica

ET = Thermal Overload
Sobrecarga térmica

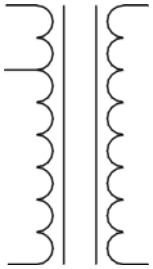

EX = Transformer
Transformador

KB = Keyboard/Keypad
Teclado/Teclado

MN = Electronic Monitor
Monitor eletrônico

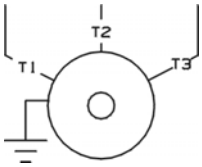

MR = Motor
Motor

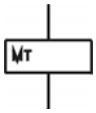

MT = Board Connector
Conector da placa

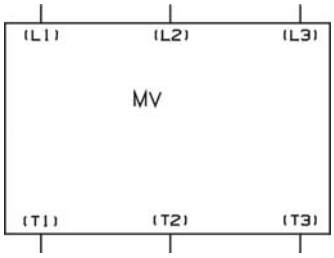

MV = Motor Inverter
Inversor do Motor

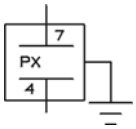

PX = Proximity Switch
Sensor de proximidade

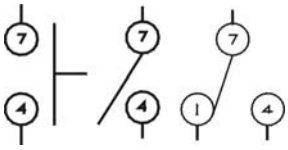

SH = Switch Hand Operated
Interruptor, Acionado à mão

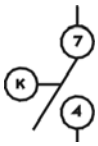

SK = Switch Key Operated
Interruptor, Acionado por teclado

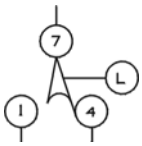

SL = Switch Level Operated
Interruptor, Acionado por nível

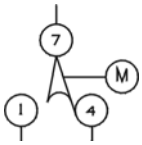

SM = Switch Mechanically Operated
Interruptor, Acionado mecanicamente

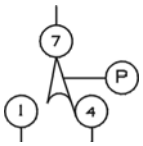

SP = Switch Pressure Operated
Interruptor, Acionado por pressão

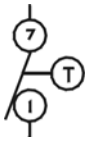

ST = Switch Temperature Operated
Interruptor, Acionado por temperatura

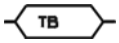

TB = Terminal Block
Bloco terminal

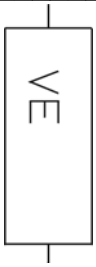

VE = Valve Electrically Operated
Válvula, Acionada por energia elétrica

WC = Wiring Connector
Conector de fiação elétrica

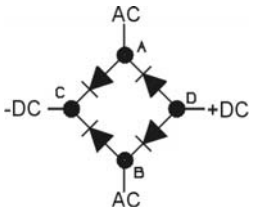

ZF = Rectifier
Retificador

The safety fence gate interlock switch installed by the end user must have a separate pole for each machine in the fenced area.
See MILNOR document BISUUI01 and BISUUI02 in the safety manual for additional information.

最终用户安装的安全围栏门联锁开关必须为围栏区域内的每台机器配备单独的杆。
有关更多信息，请参阅安全手册中的 MILNOR 文档 BISUUI01 和 BISUUI02。

エンド ユーザーが設置する安全フェンス ゲート インターロック スイッチには、フェンスで囲まれたエリア内の各マシンごとに個別のポールが必要です。
詳細については、安全マニュアルの MILNOR ドキュメント BISUUI01 および BISUUI02 を参照してください。

O interruptor de intertravamento do portão da cerca de segurança instalado pelo usuário final deve ter um poste separado para cada máquina na área cercada.
Consulte os documentos BISUUI01 e BISUUI02 da MILNOR no manual de segurança para obter informações adicionais.

Son kullanıcı tarafından monte edilen emniyet çit kapısı kilitleme anahtarı, çitle çevrili alandaki her makine için ayrı bir direğe sahip olmalıdır.
Ek bilgi için güvenlik kılavuzundaki MILNOR dokümanı BISUUI01 ve BISUUI02'ye bakın.

SAFETY FENCE GATE WIRING FOR
安全围栏门接线
安全柵ゲート配線
FIAÇÃO DE PORTÃO DE CERCA DE SEGURANÇA PARA
GÜVENLİK ÇİT KAPISI KABLOLAMA

SHUTTLES
班车
シャトル
Ônibus
Servisler
SEE W6SH5SS+, W6CD5SS+

2 STAGE PRESS
2级压榨
2段階プレス
Prensa de 2 estágios
2 Aşamalı Pres
SEE W6PR5SS+

SINGLE STAGE PRESS
单级压机
シングルステージプレス
Prensa de estágio único
Tek Kademeli Pres
SEE W6PM1SS+

CENTRIFUGAL EXTRACTORS
离心萃取机
遠心抽出機
Extrator centrífugo
Santrifüjlü Ekstraktör
SEE W6EX5S+

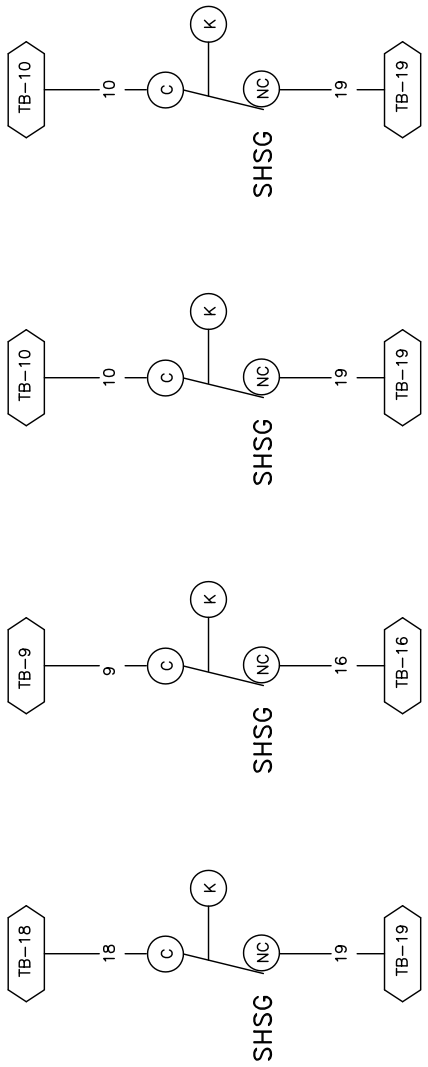

00 01 02 03 04 05 06 07 08 09 10 11 12 13

Customer installed Safety Fence
客户安装的安全围栏
顧客設置の安全フェンス
Cerca de segurança instalada pelo cliente
Müşteri Tarafından Kurulan Güvenlik Çiti

W6SYSSGX

PELLERIN MILNOR CORPORATION

2025256A

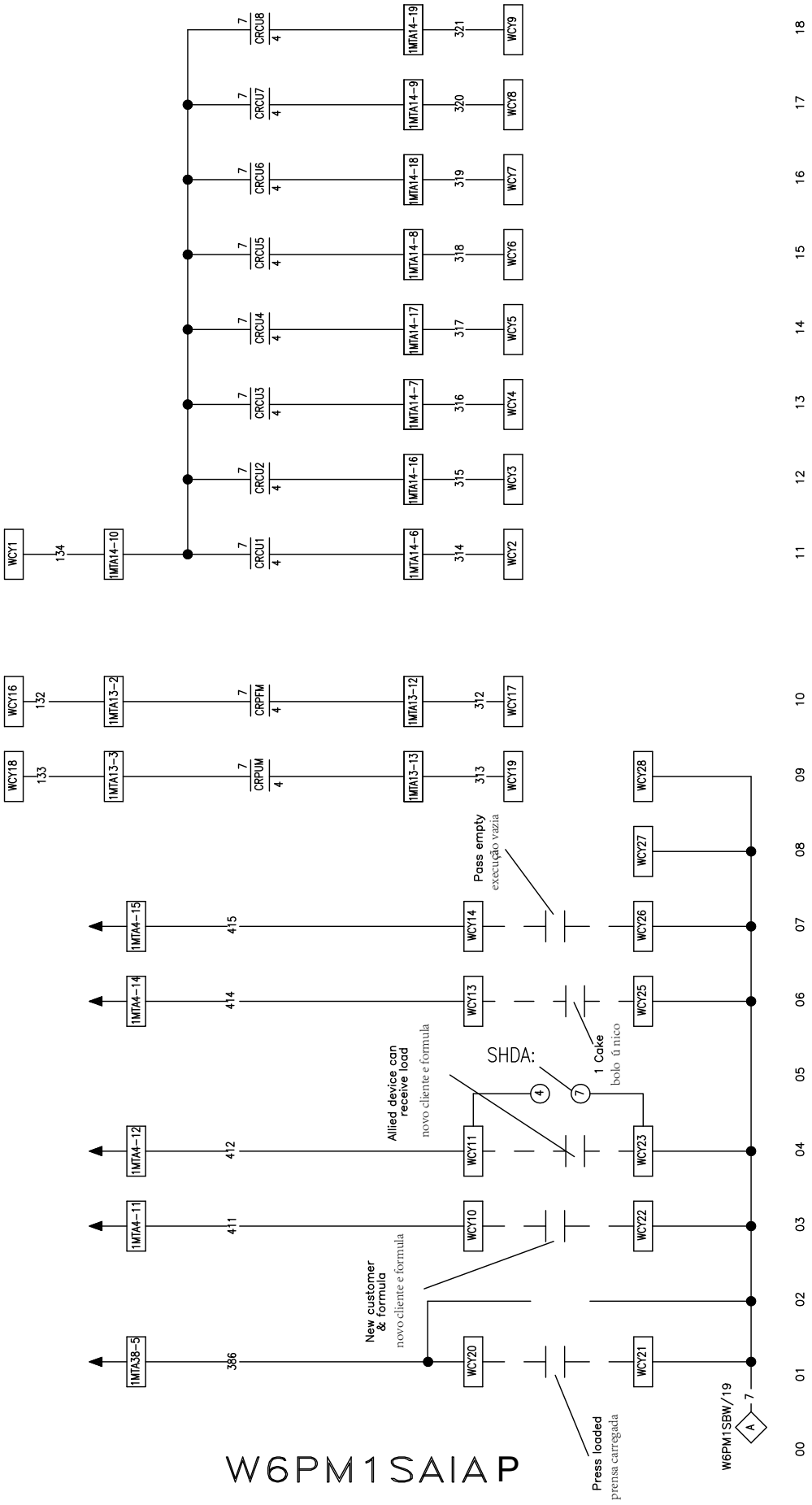

Allied Inputs

entradas associadas

W6PM1SAIAP

PELLERIN MILNOR CORPORATION

2019206A

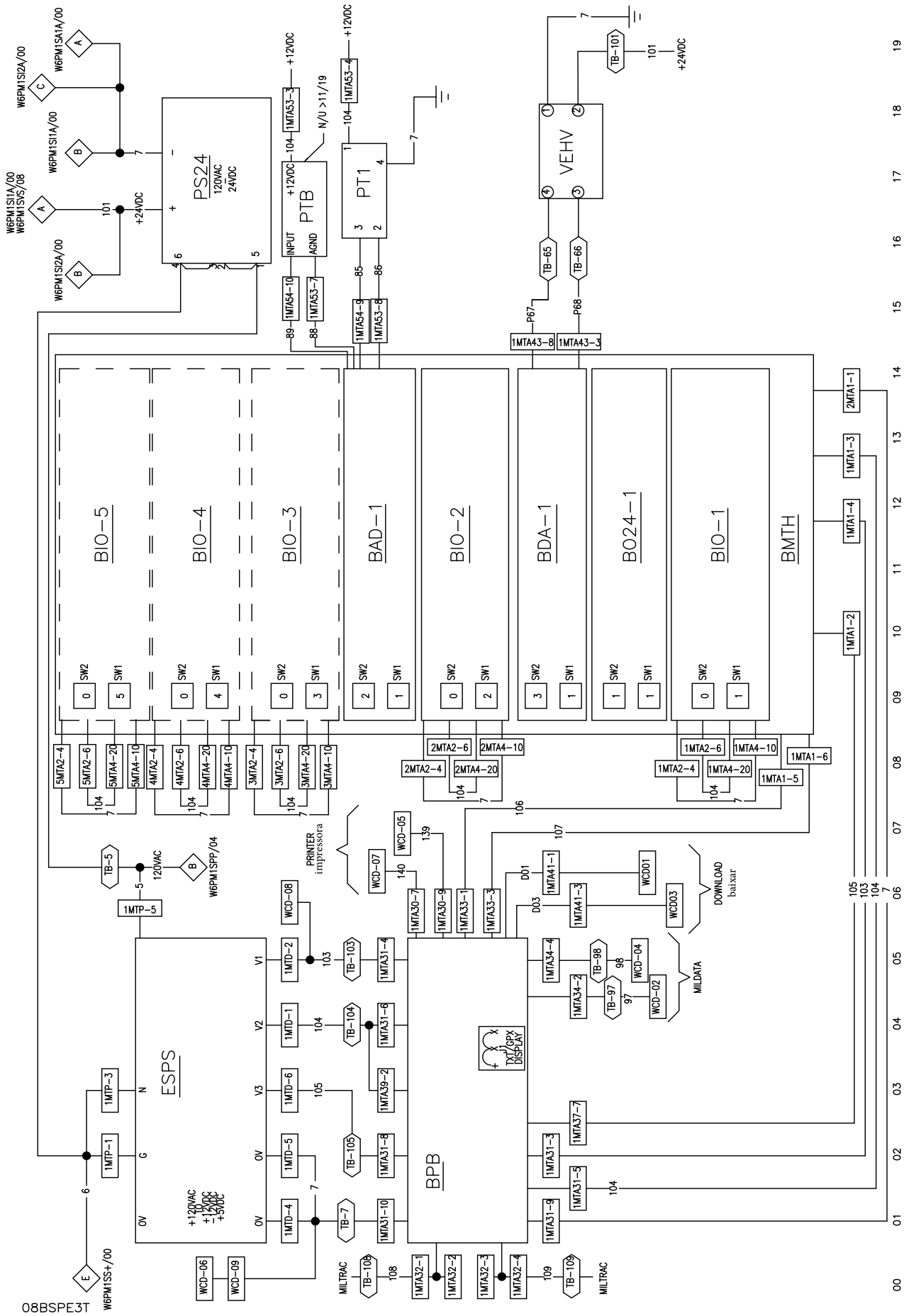

08BSPE3T
Wiring between the boards
Fiação entre placas

W6PM1SBWBP

PELLERIN MILNOR CORPORATION

2021144A

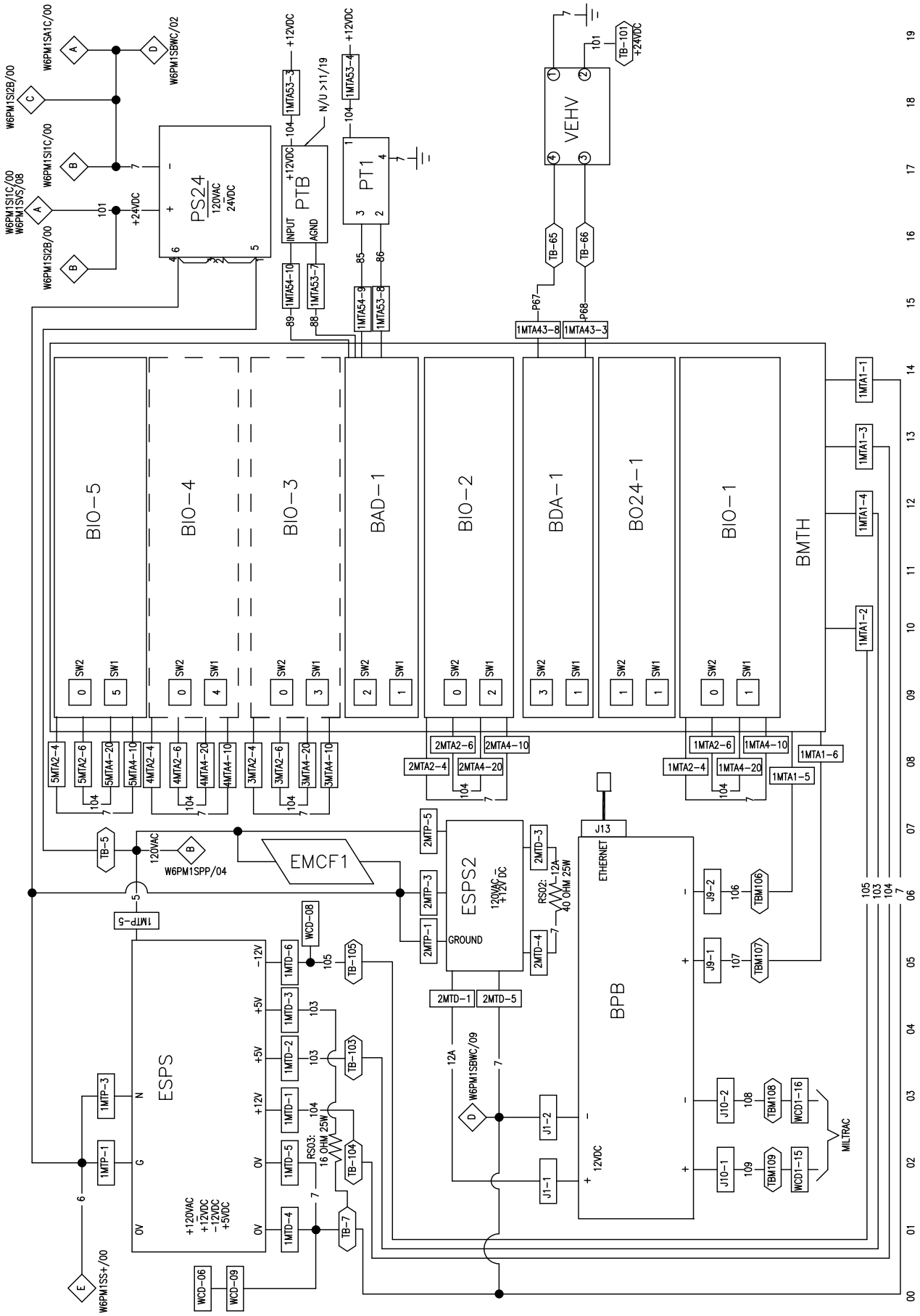

Q7
Wiring between the boards
电路板之间的布线
fiação entre as placas
panolar arasındaki kablolama

W6PM1SBWCX

PELLERIN MILNOR CORPORATION

2024474A

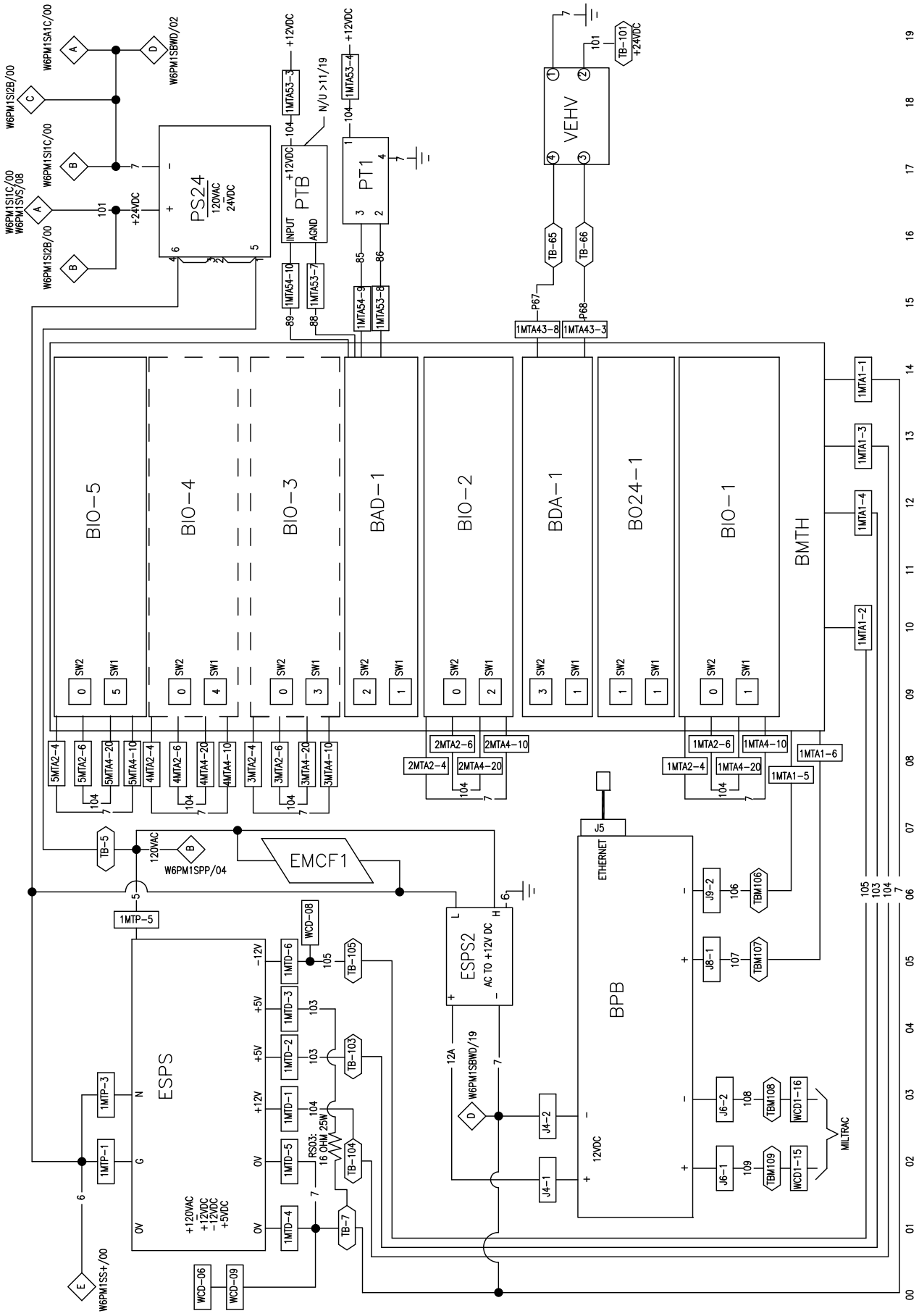

iMX6
Wiring between the boards
电路板之间的布线
fiação entre as placas
panolar arasındaki kablolama

W6PM1SBWDX

PELLERIN MILNOR CORPORATION

2024474A

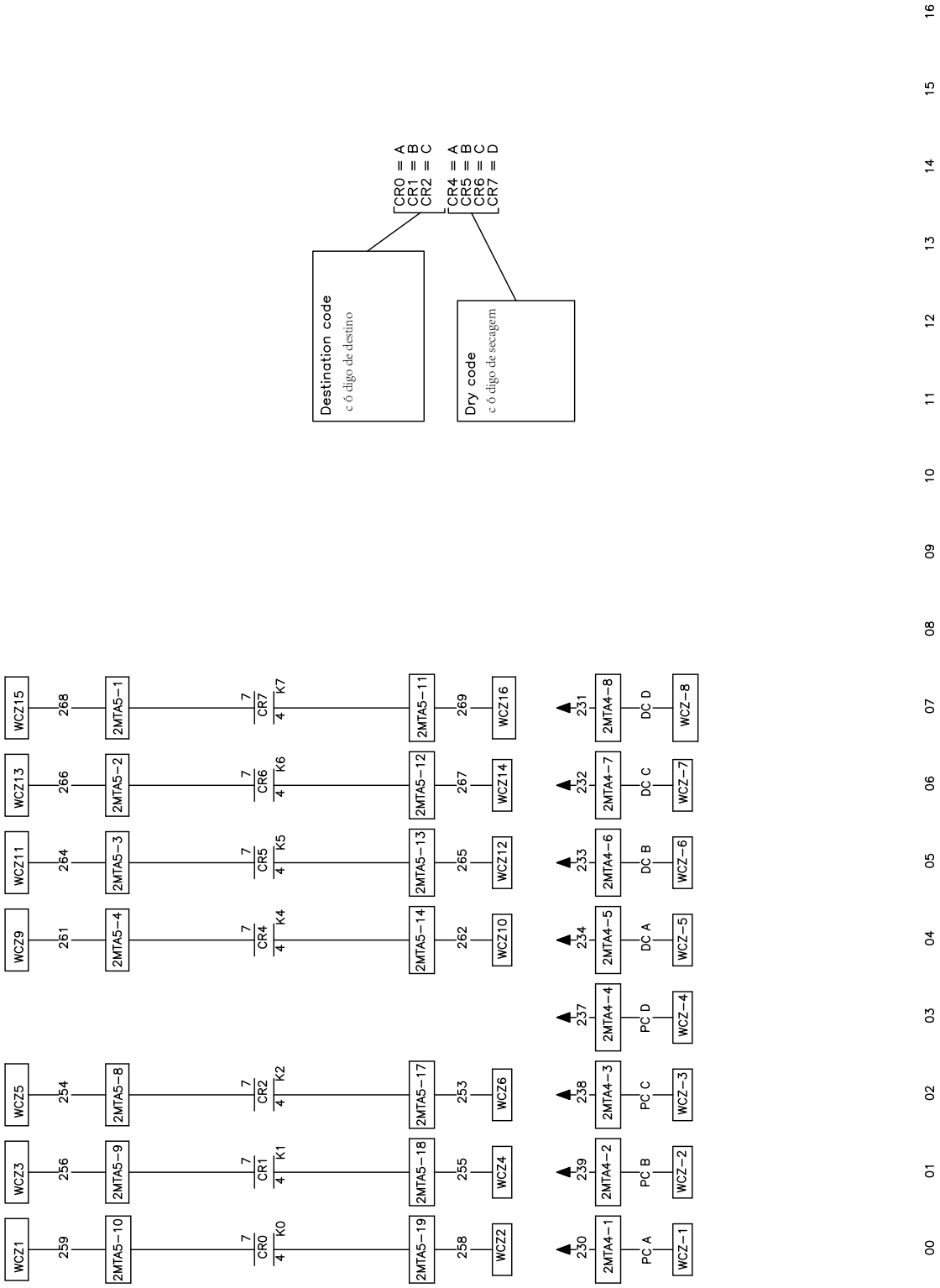

Data pass
passagem de dados

W6PM1SDP2 P

PELLERIN MILNOR CORPORATION

2023196A

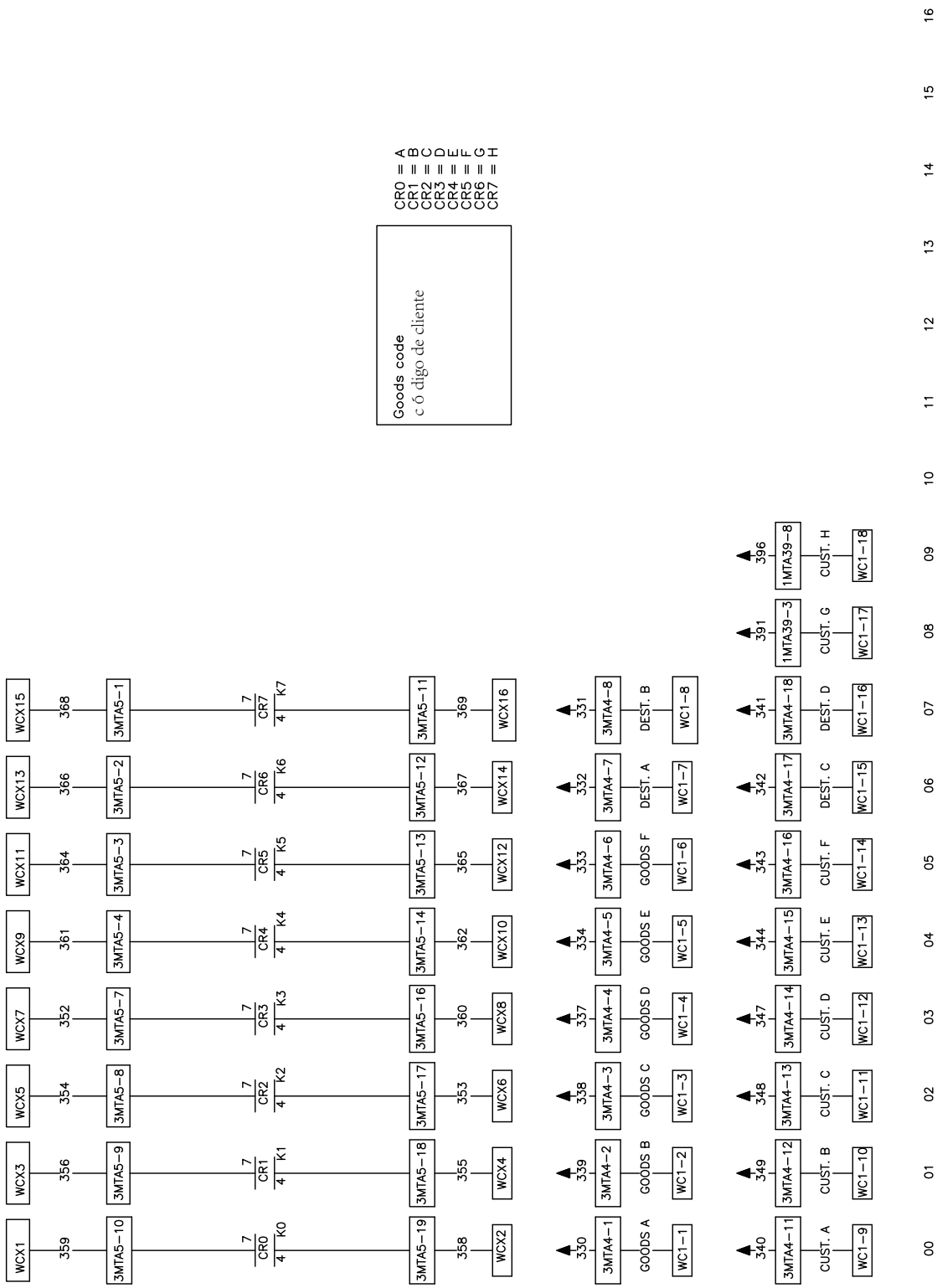

Data pass
passagem de dados

W6PM1SDP3AP

PELLERIN MILNOR CORPORATION

2003174A

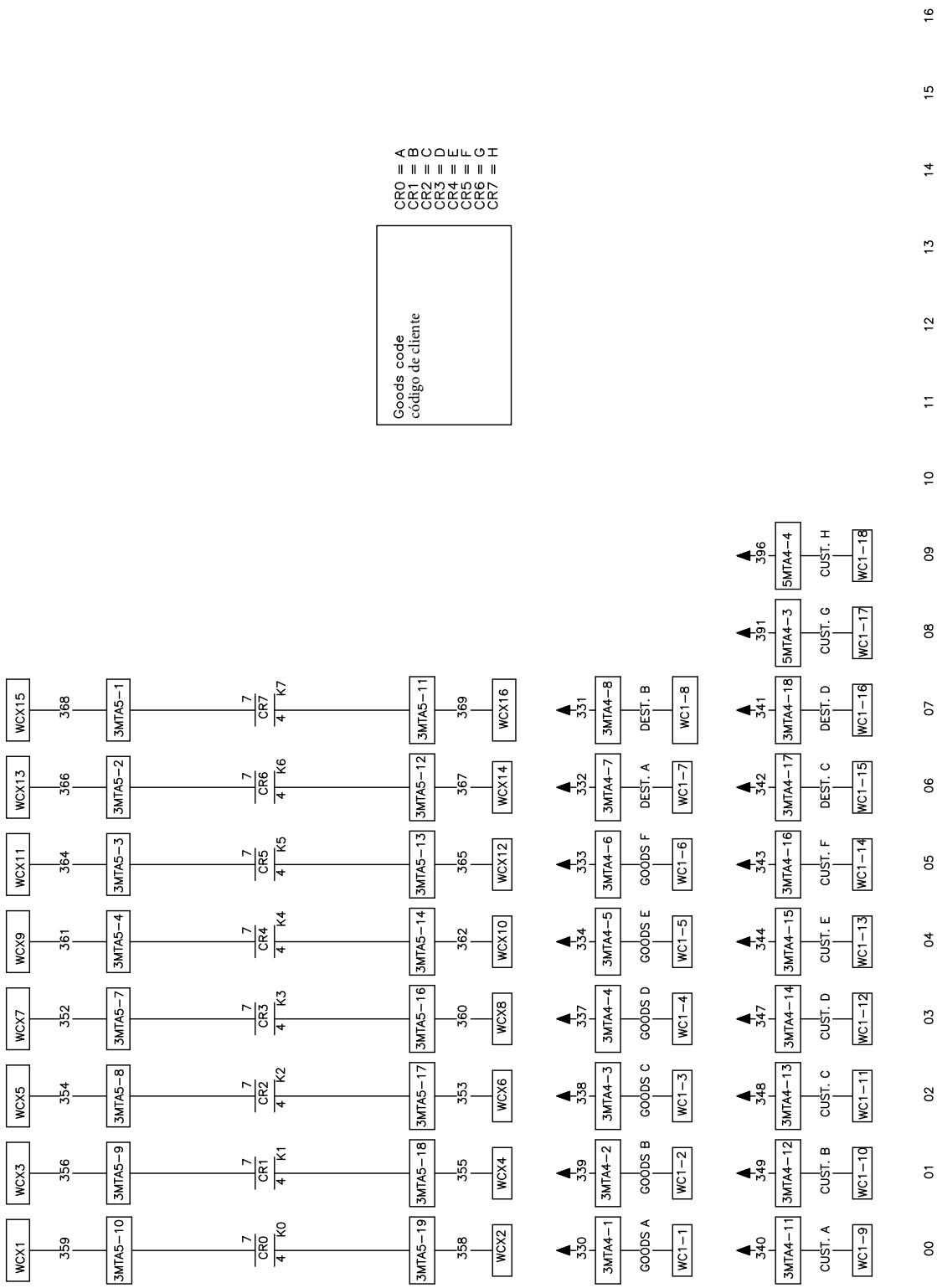

Data pass
passagem de dados

W6PM1SDP3BP

PELLERIN MILNOR CORPORATION

2018512A

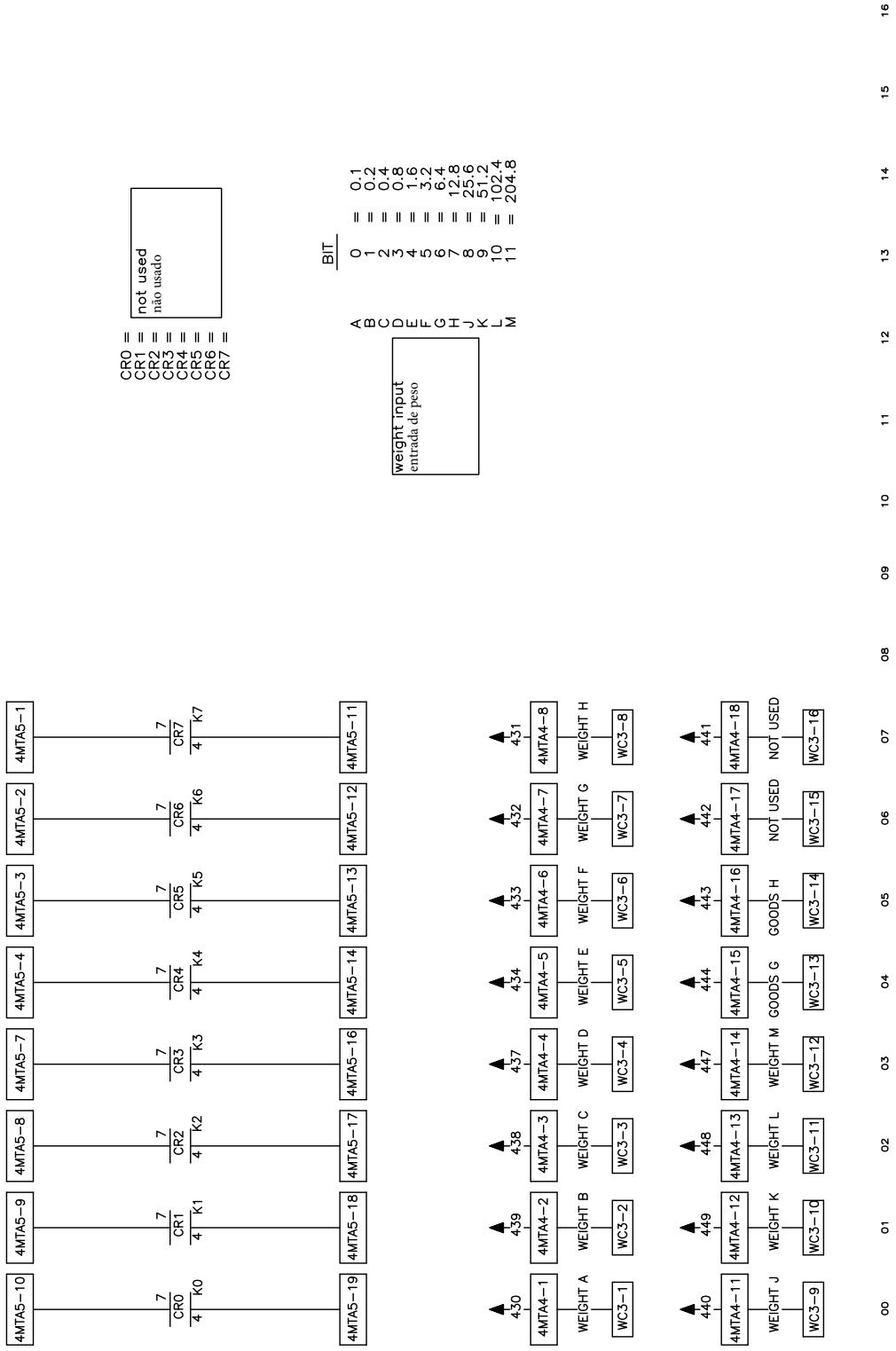

Data pass

passagem de dados

W6PM1SDP4P

PELLERIN MILNOR CORPORATION

2004492A

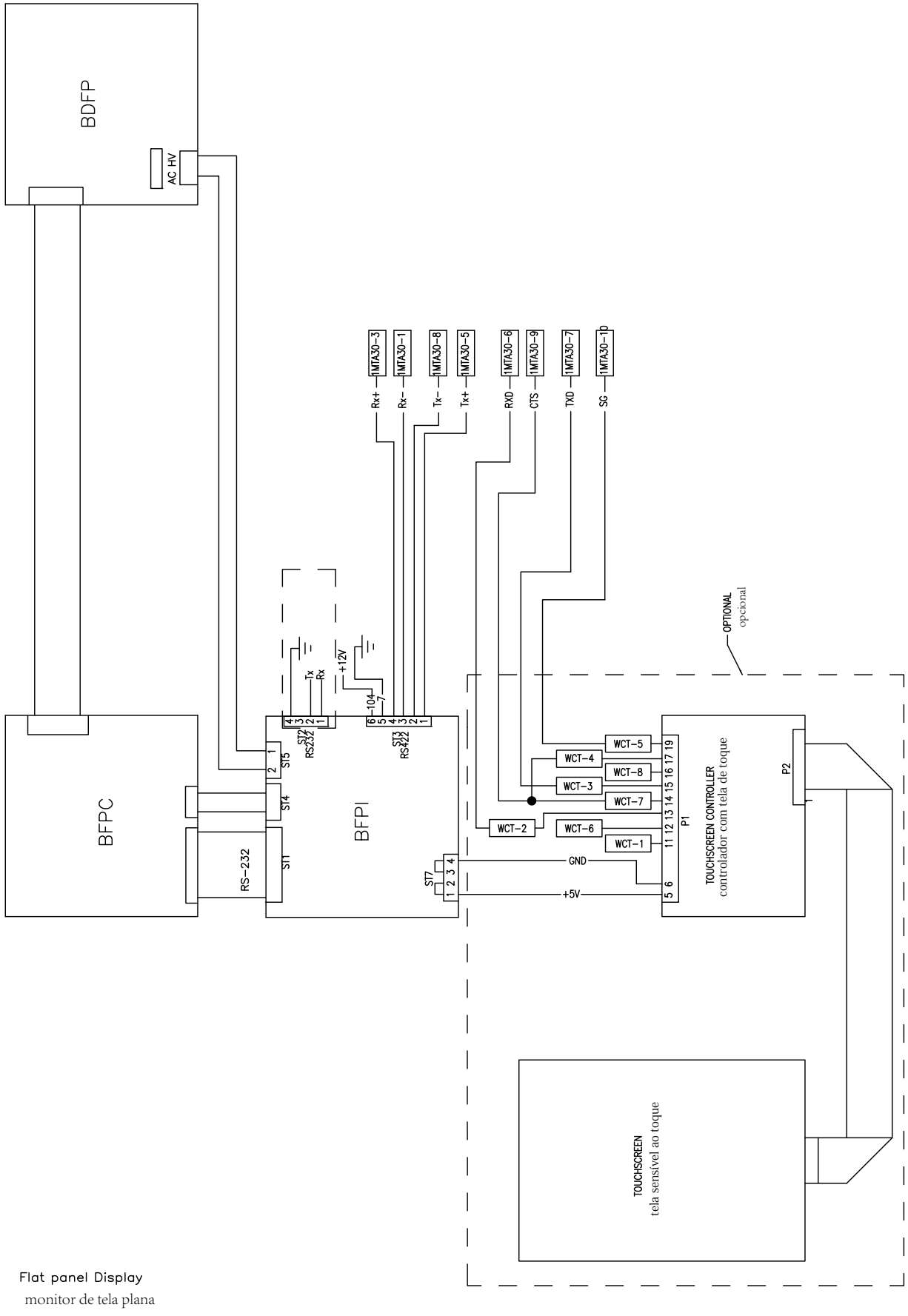

Flat panel Display

monitor de tela plana

W6PM1SECP

PELLERIN MILNOR CORPORATION

2016133A

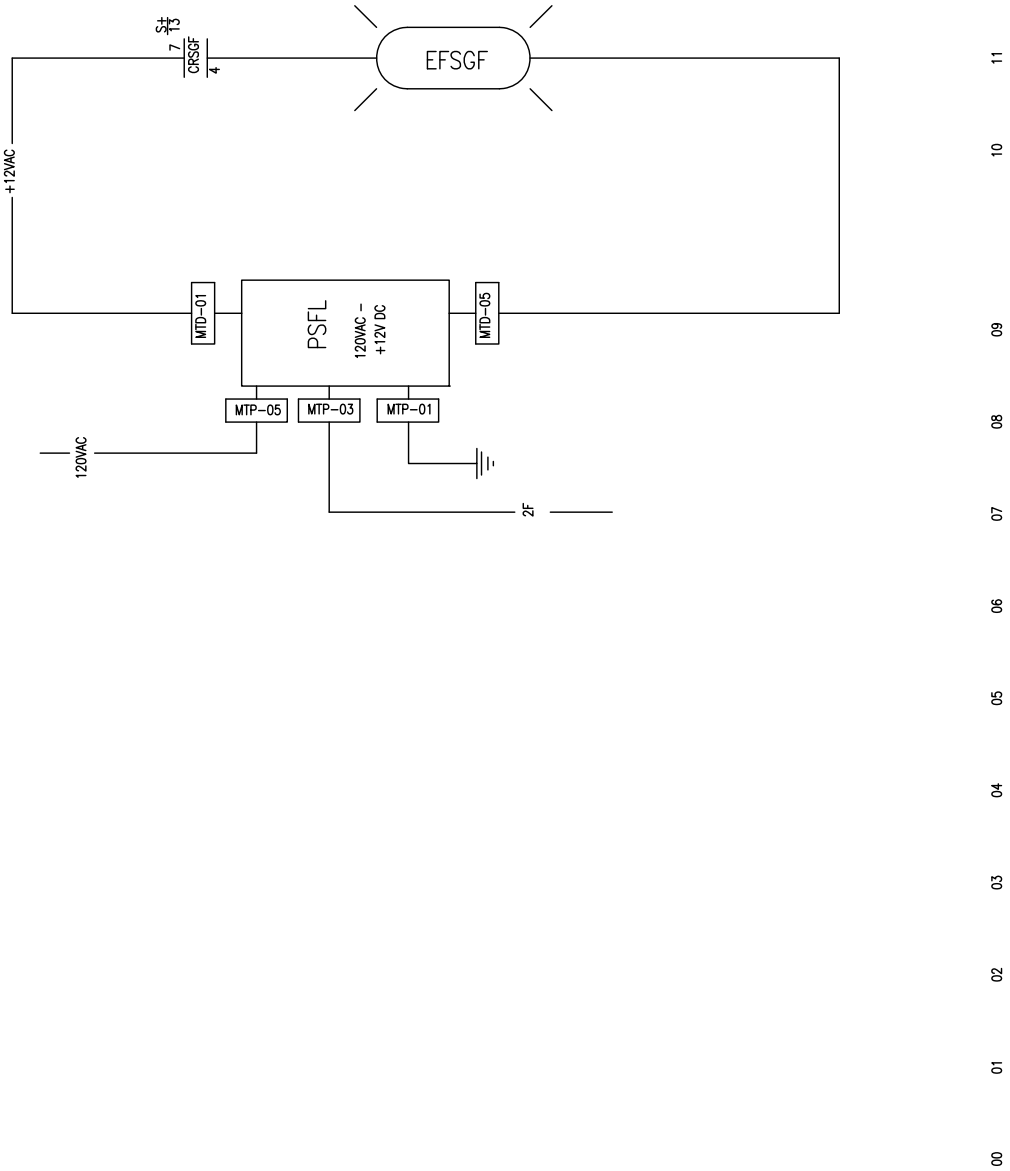

Optional flashing lights
luz intermitente opcional

W6PM1SFSP

PELLERIN MILNOR CORPORATION

2016525A

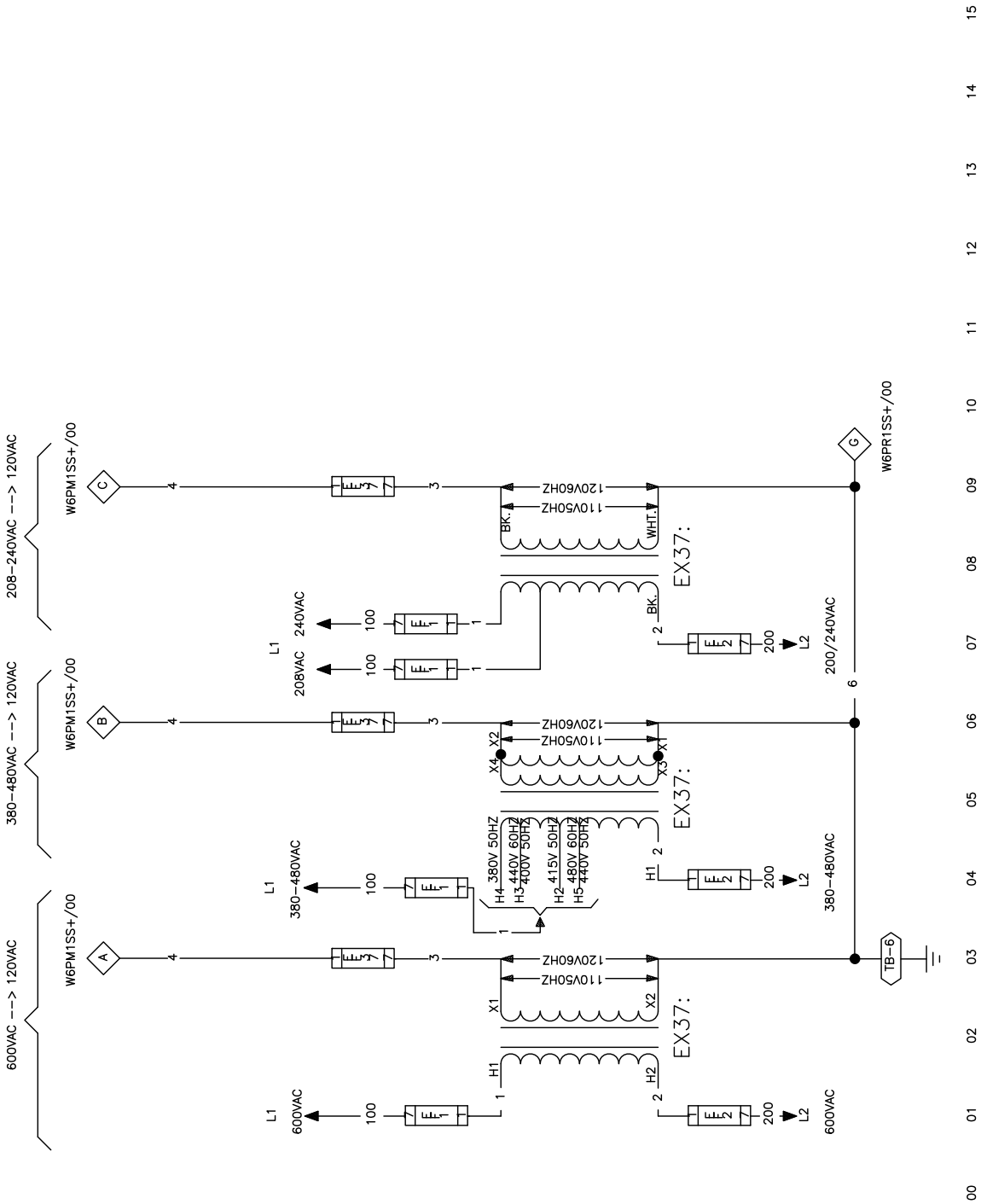

Control Circuit Power
alimentação do circuito de controle

W6PM1SHVP

PELLERIN MILNOR CORPORATION

99526A

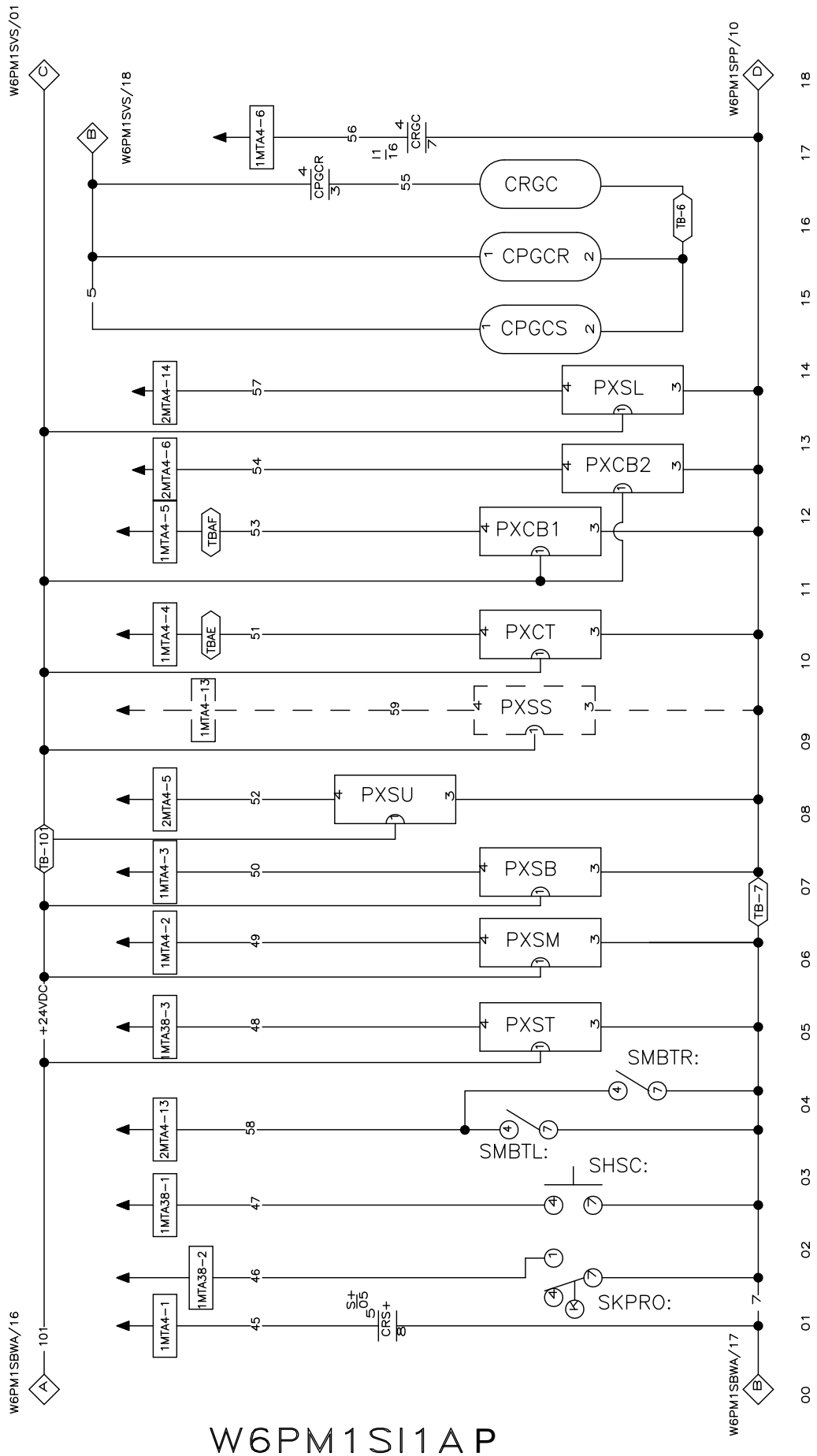

Inputs
entradas

W6PM1SI1AP

PELLERIN MILNOR CORPORATION

2018486A

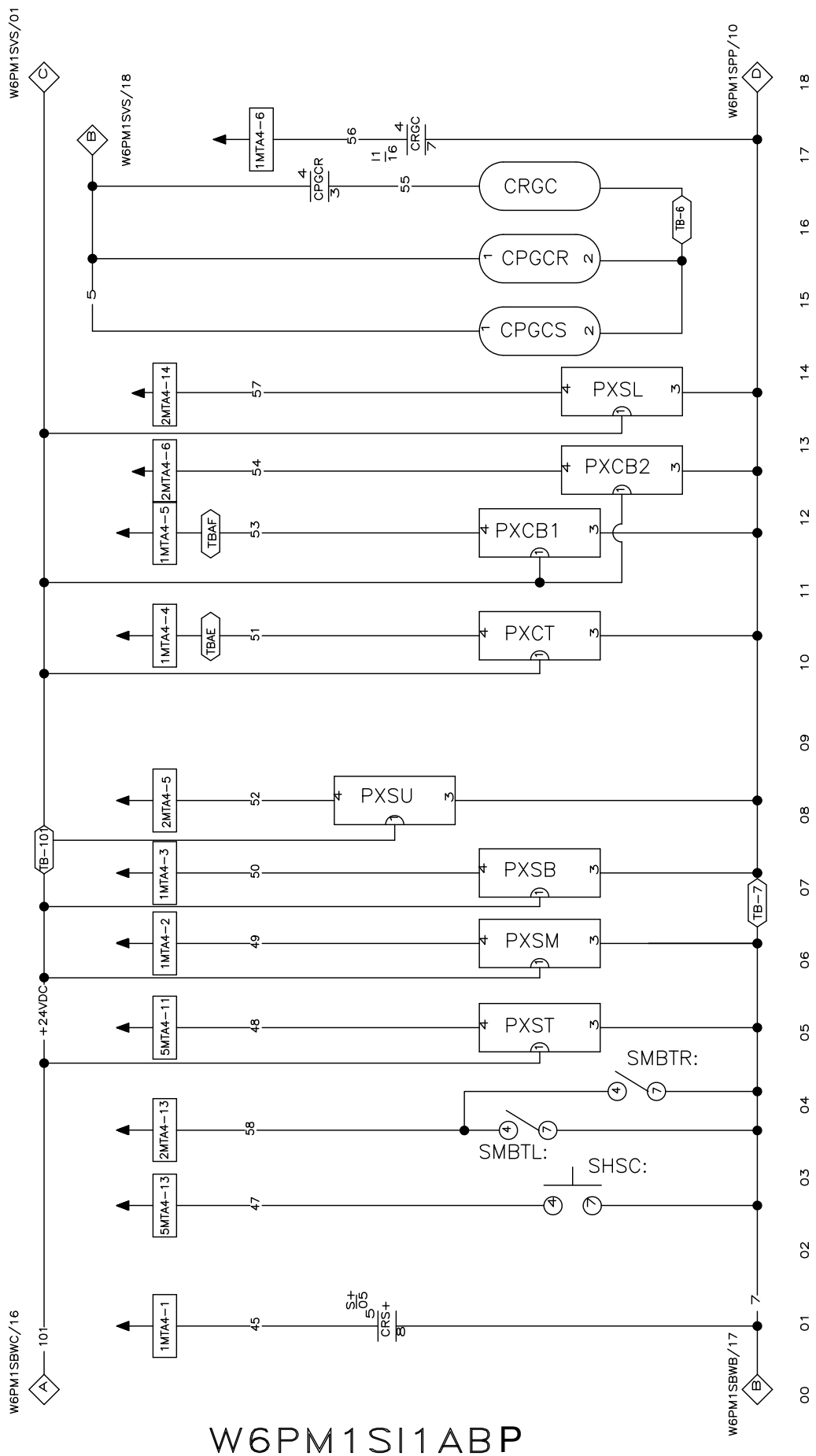

Inputs
entradas

W6PM1SI1ABP

PELLERIN MILNOR CORPORATION

2018512A

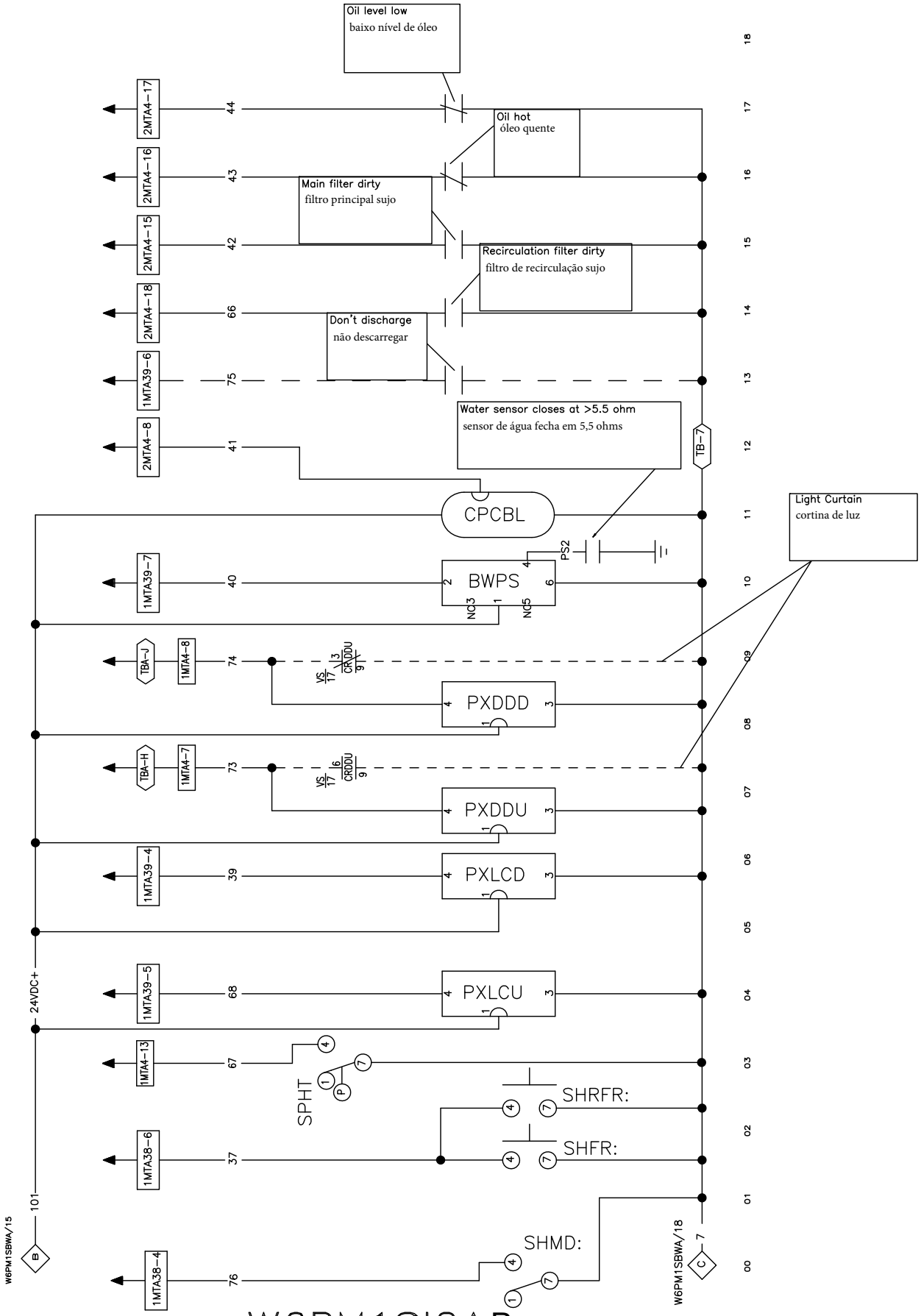

Inputs
entradas

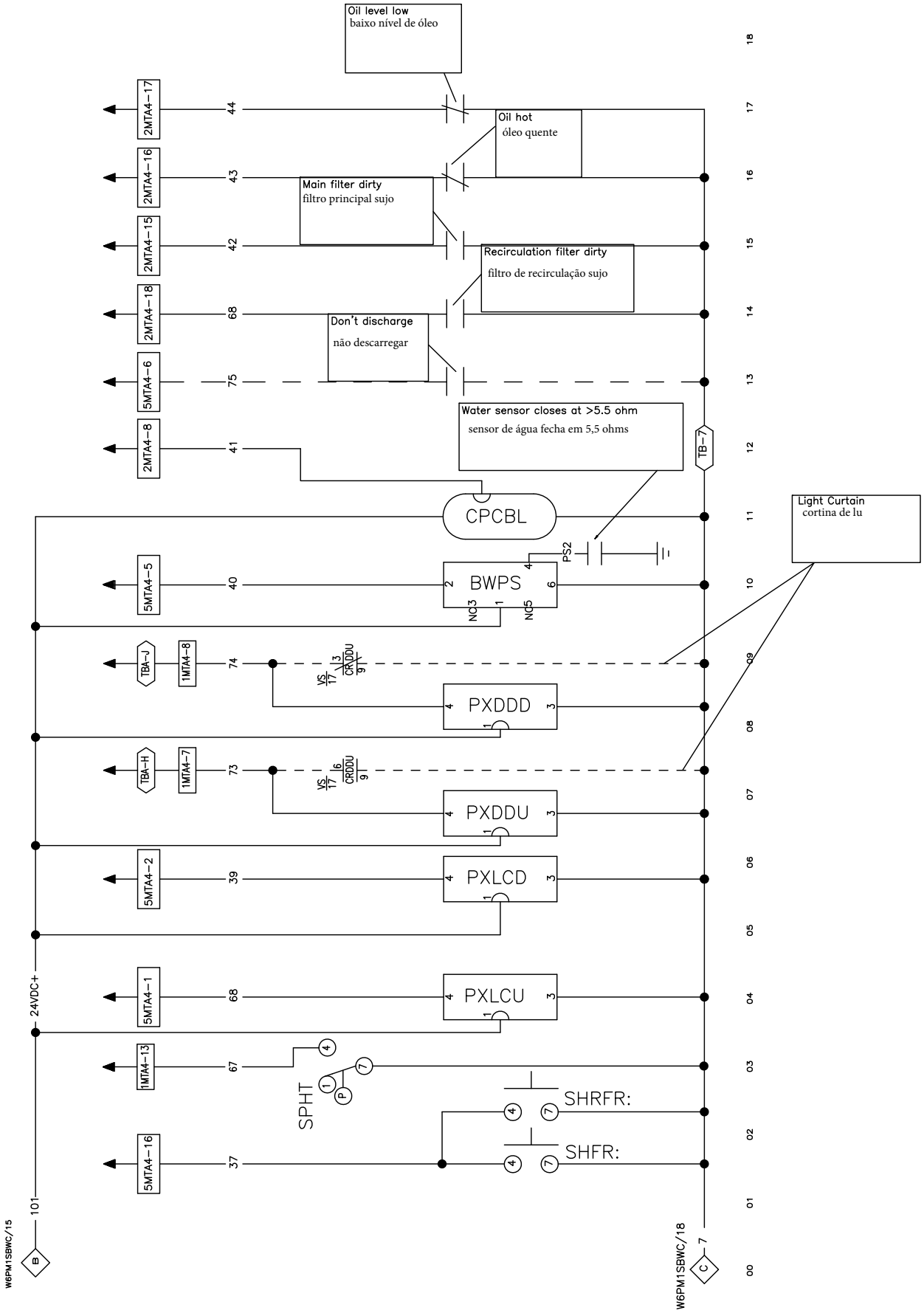

Inputs
entradas

W6PM1SI2BP

PELLERIN MILNOR CORPORATION

2021053A

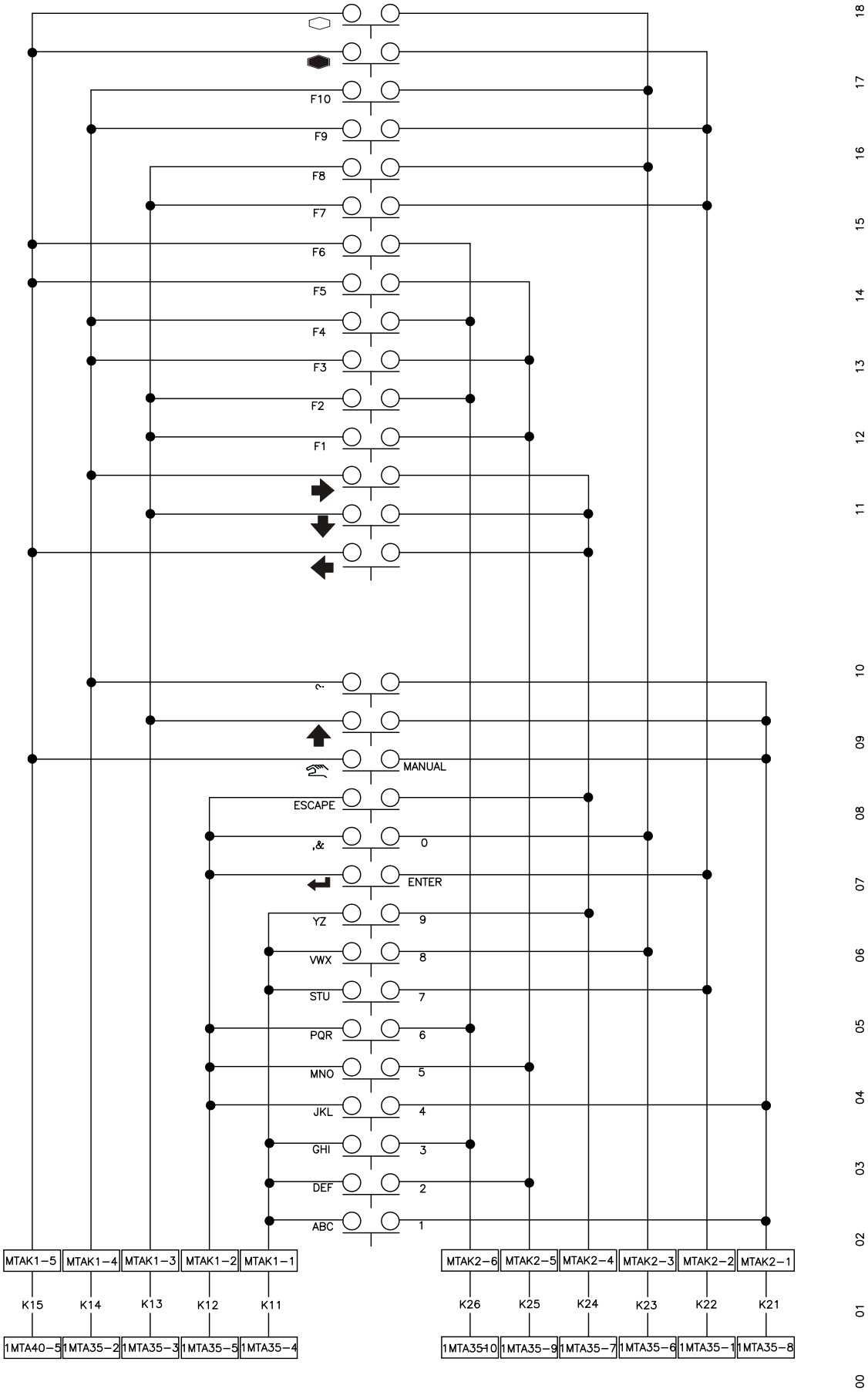

W6PM1SKPAP

Keypad
teclado

PELLERIN MILNOR CORPORATION

2007285A

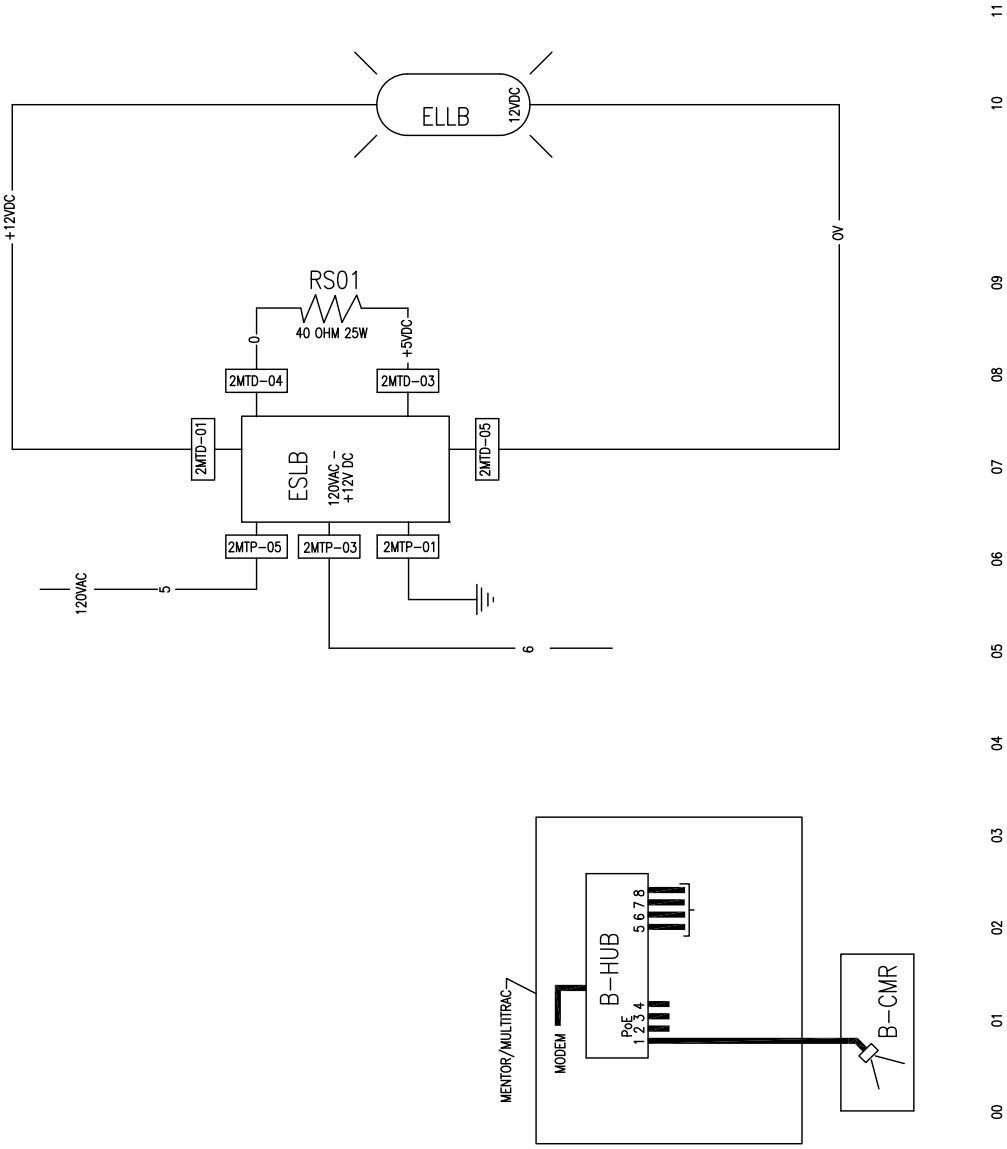

Light
Luz

W6PM1SLBP

PELLERIN MILNOR CORPORATION

2023112A

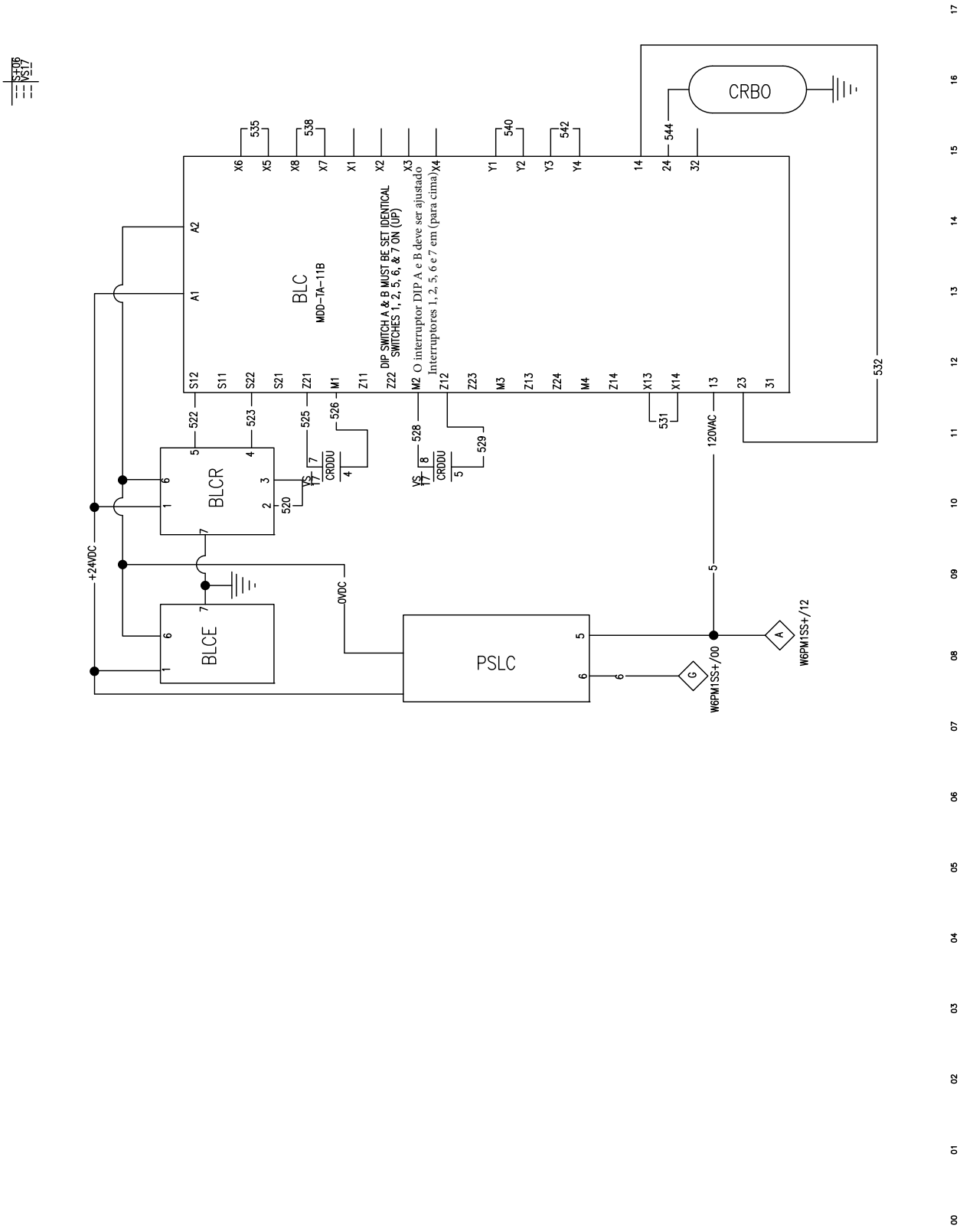

Light Curtain
Cortina de luz

W6PM1SLCP

PELLERIN MILNOR CORPORATION

2021346A

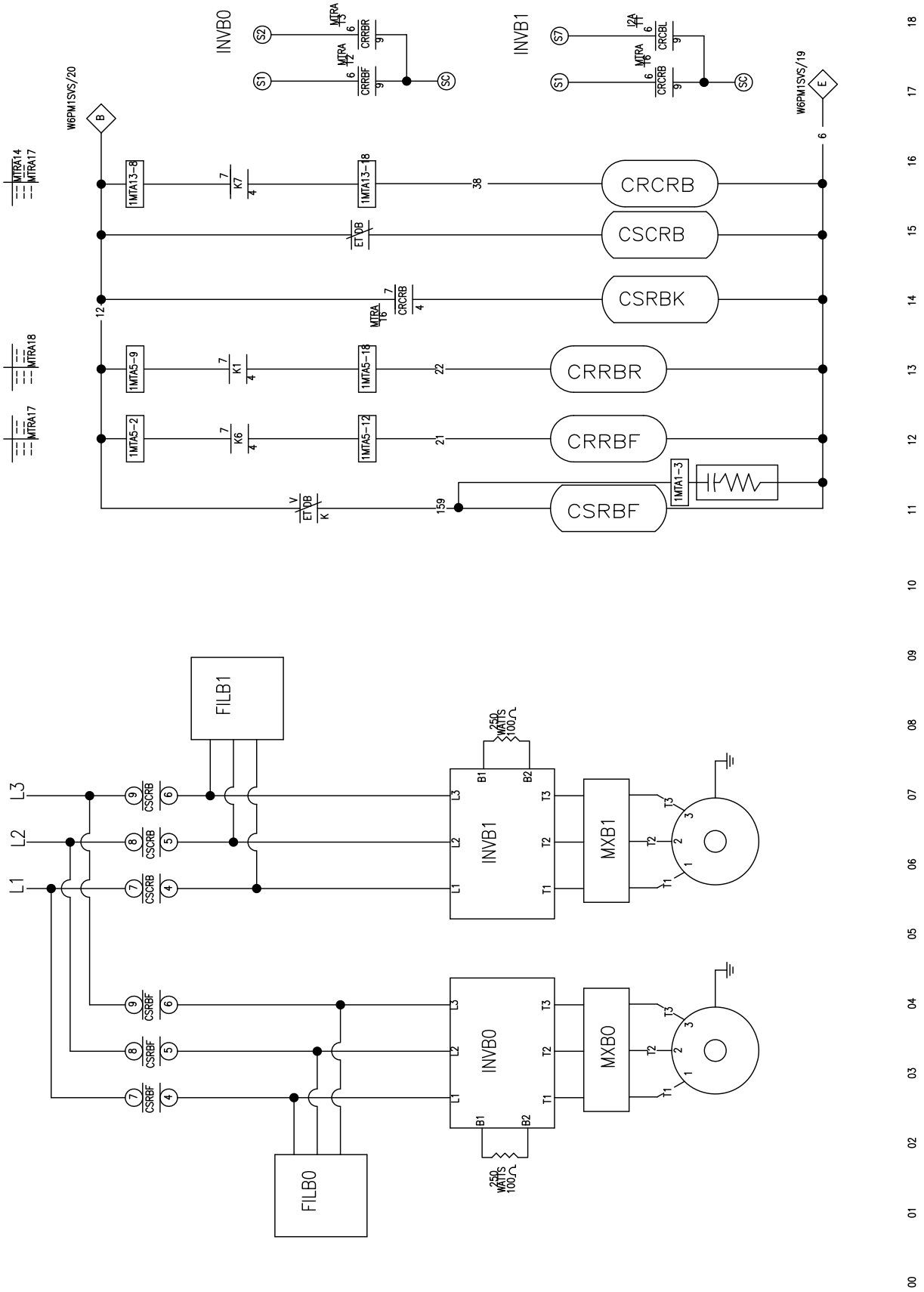

Inverter belt motor wiring
fiação do inversor do motor da correia1

W6PM1SMTRAP

PELLERIN MILNOR CORPORATION

2021053A

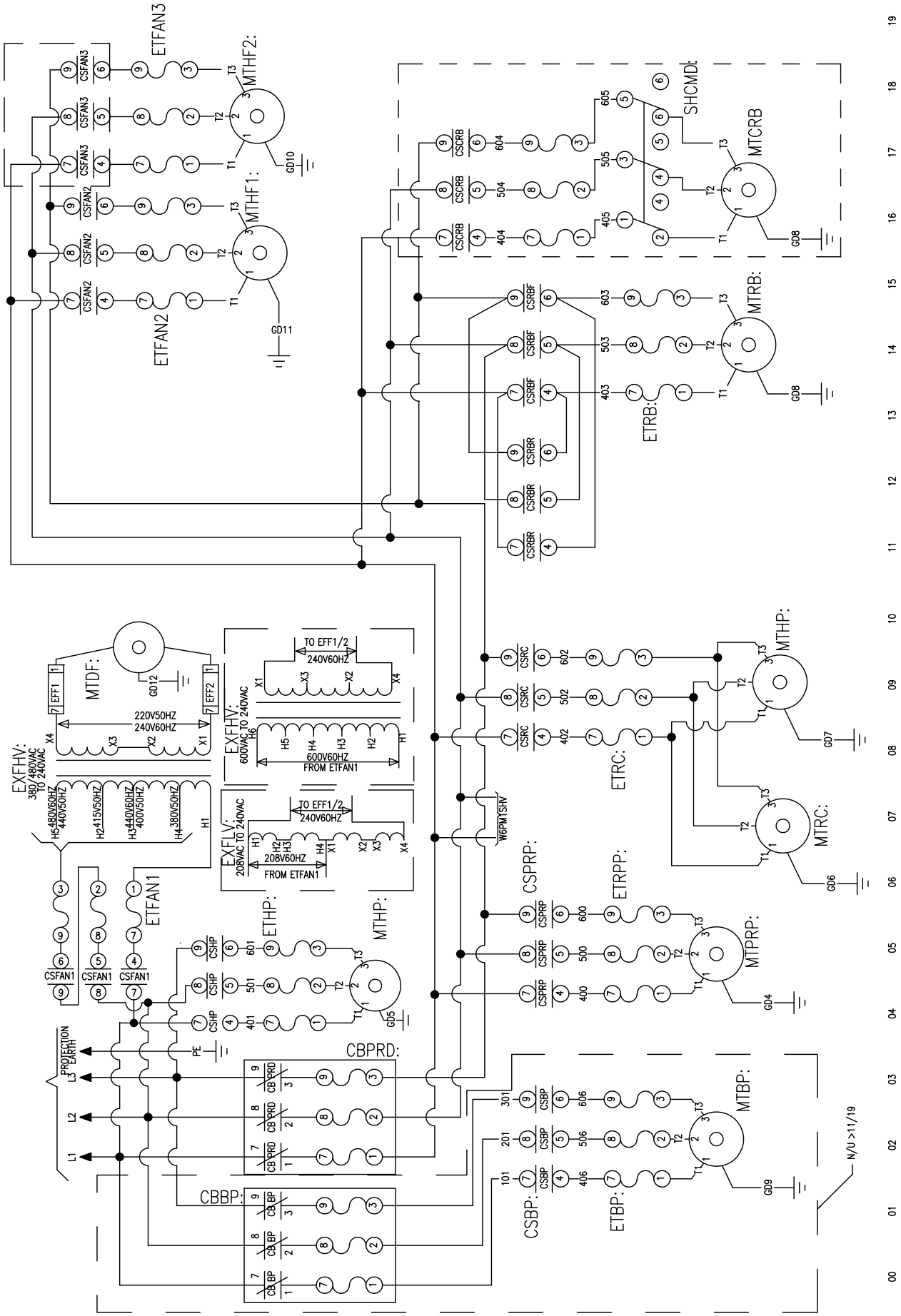

W6PM1SMTRP

PELLERIN MILNOR CORPORATION

2024334A

Motors
motores

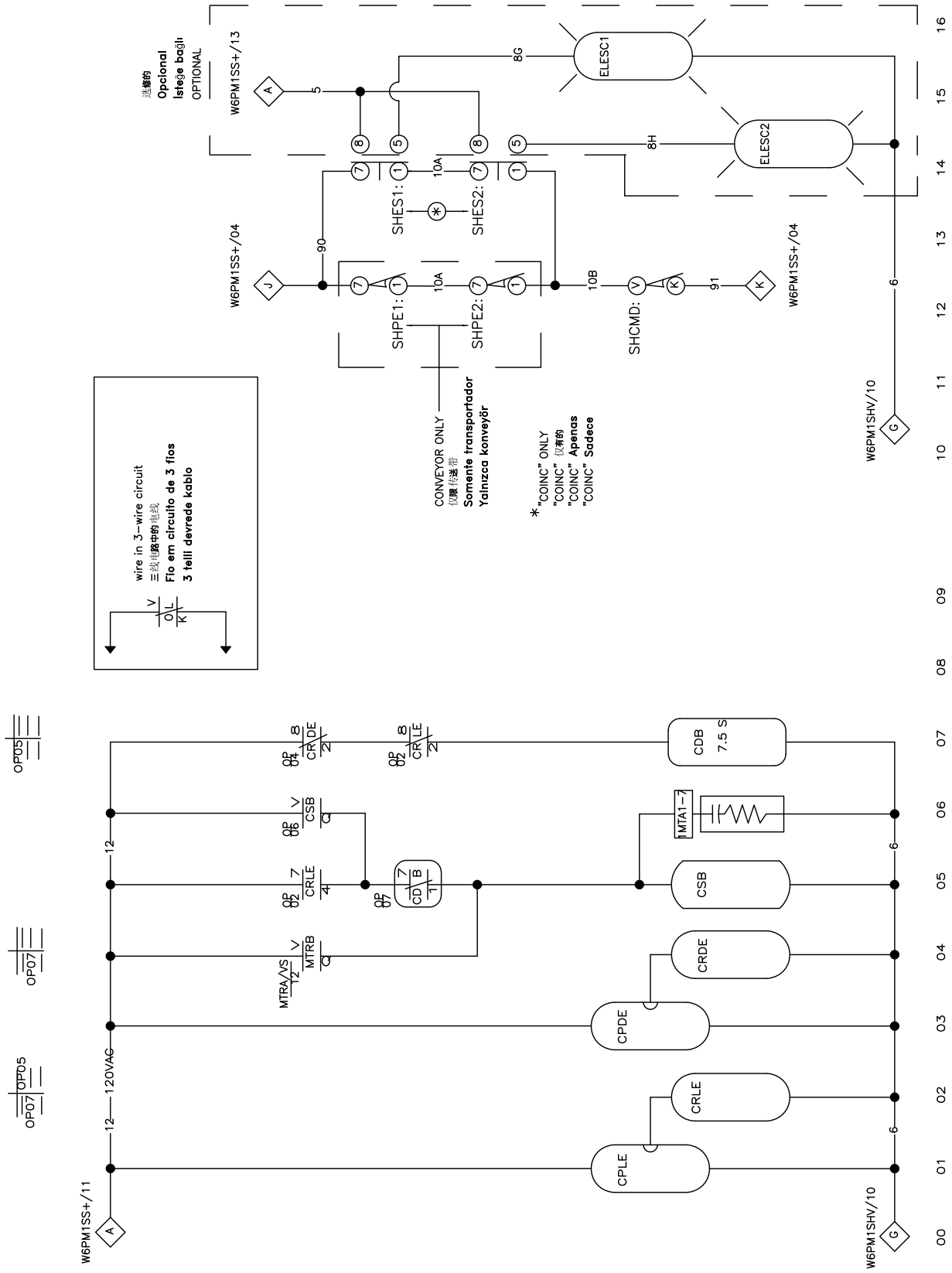

Discharge conveyor
卸料输送机
Transportador de descarga
Boşaltma Konveyörü

W6PM1SOPX

PELLERIN MILNOR CORPORATION

2025154A

COINC Pivoting/Elevating
Coinc 减转/升降
Coinc Pivotante/Elevador
Coinc Pivoting/Yükseltme

W6PM1SPC1X

PELLERIN MILNOR CORPORATION

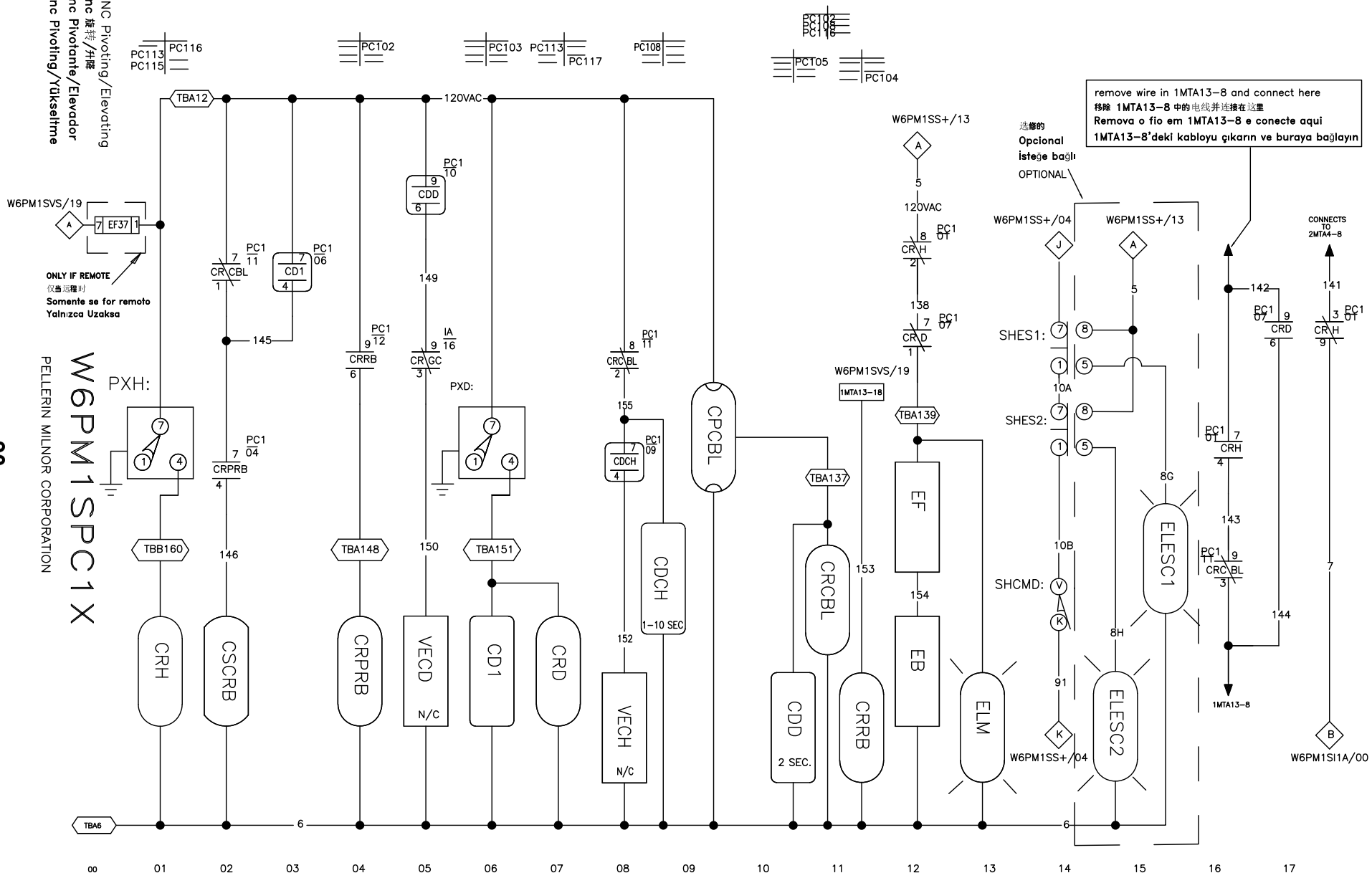

2025154A

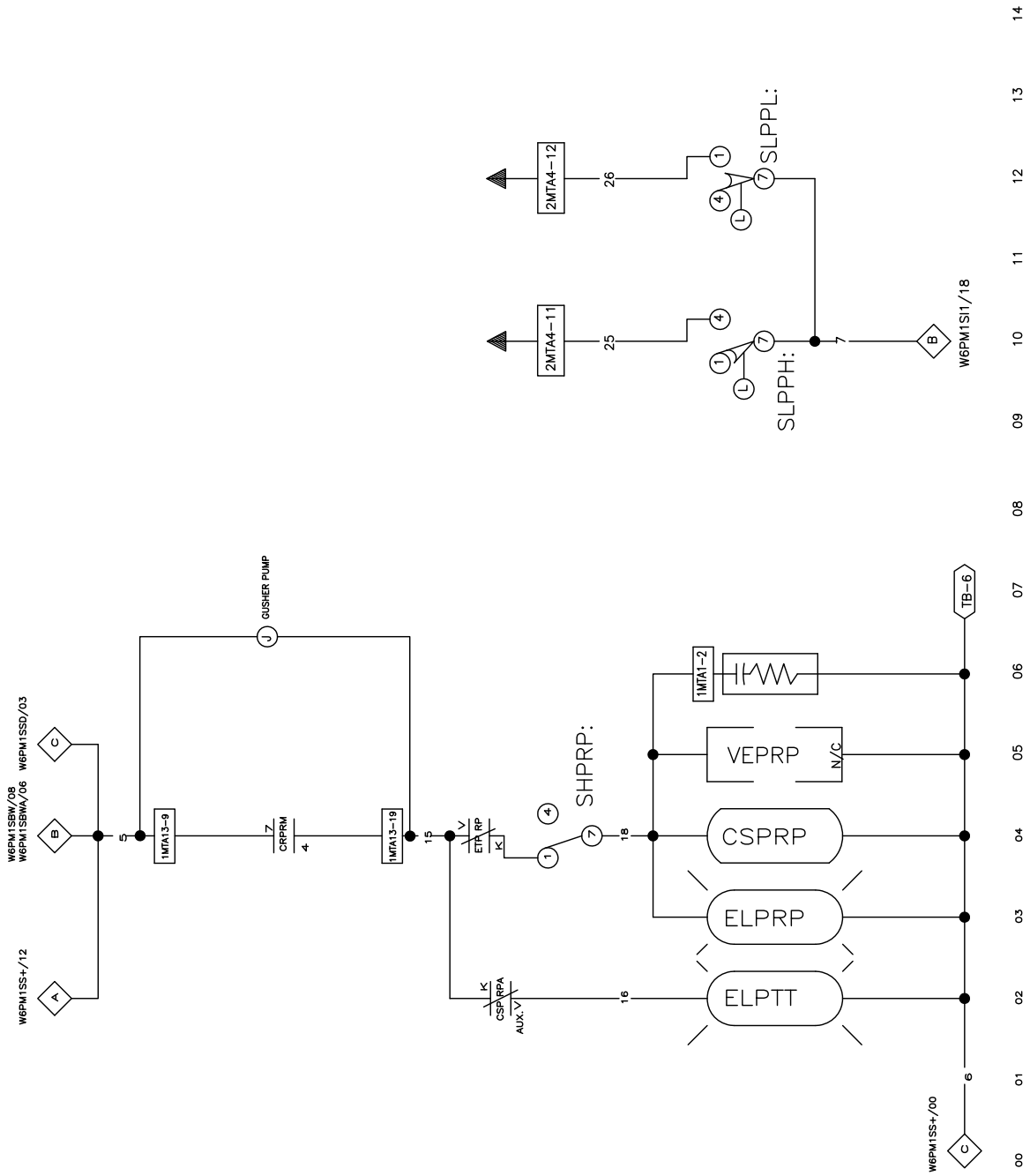

Press Pump
bomba de prensa

W6PM1SPPP

PELLERIN MILNOR CORPORATION

2017245A

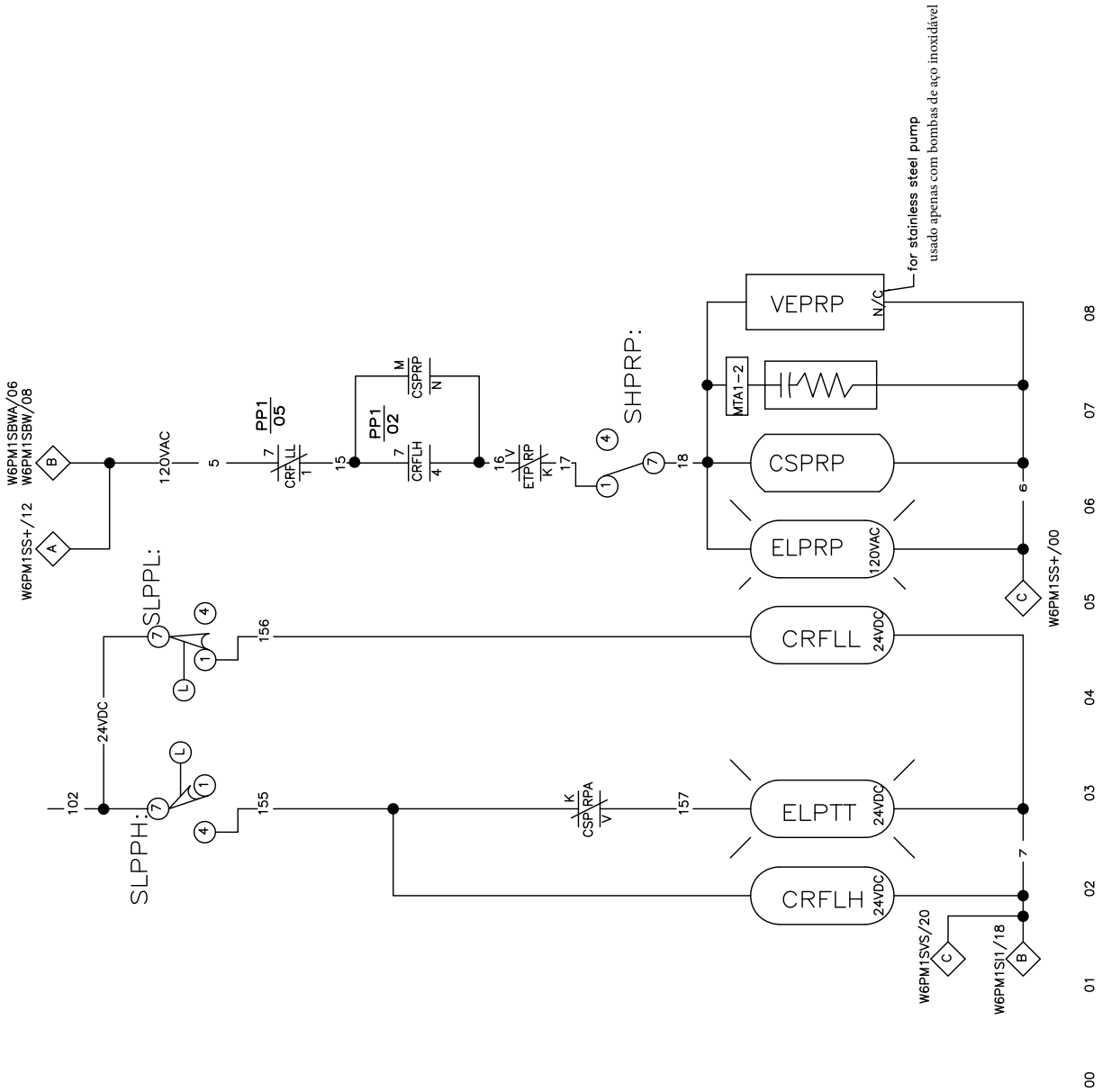

W6PM1SPP1P

Return pump+conductivity probes

bomba de retorno + sondas de condutividade

PELLERIN MILNOR CORPORATION

2024053A

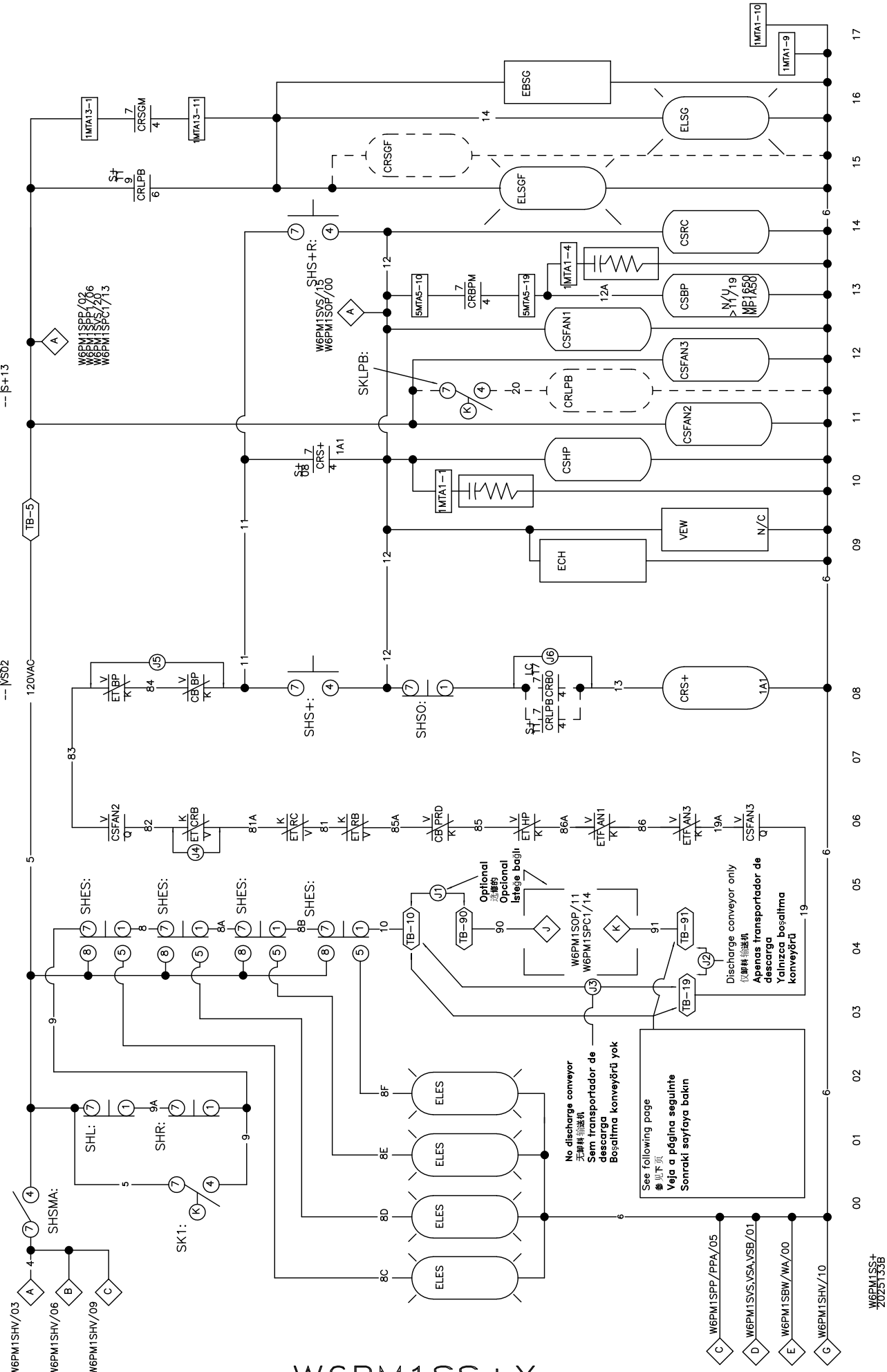

W6PM1SS+X
PELLERIN M ORPORATION
2025162A
W6PM1SS+
2025133B
Start Circuit
启动电路
Iniciar circuito
Devreyi başlat
W6PM1SHV/03
W6PM1SHV/06
W6PM1SHV/09
W6PM1SPP/PPA/05
W6PM1SVS,VSA,VSB/01
W6PM1SBW/WA/00
W6PM1SHV/10
SHSMA:
SK1:
SHL:
SHR:
SHES:
SHS+:
SHSO:
SHS+R:
SKLPB:
ELES
TB-5
TB-10
TB-90
TB-91
TB-19
120VAC
W6PM1SOP/11
W6PM1SPC1/14
Optional
选修的
Opcional
İsteğe bağlı
Discharge conveyor only
仅卸料输送机
Apenas transportador de descarga
Yalnızca boşaltma konveyörü
No discharge conveyor
无卸料输送机
Sem transportador de descarga
Boşaltma konveyörü yok
See following page
参见下页
Veja a página seguinte
Sonraki sayfaya bakın
W6PM1SPP/PPA/05
W6PM1SVS,VSA,VSB/01
W6PM1SBW/WA/00
W6PM1SHV/10
EBSG
ELSG
ELSGF
CRSGF
CSRC
CSBP
CSFAN1
CSFAN3
CSFAN2
CSHP
CRLPB
VEW
ECH
CRS+
CRSGM
CRLPB
CRBPM
CRS+
CRLPB
CRBO
CSFAN2
CSFAN3
ETCRB
ETRC
ETRB
CBPRD
ETHP
ETFAN1
ETFAN3
CBBP
ETBP
1MTA13-1
1MTA13-11
1MTA1-4
1MTA1-1
1MTA1-10
1MTA1-9
5MTA5-10
5MTA5-19

EN----------

Serious bodily injury or death can result to personnel in proximity to machinery/systems that transverse, elevate, extend, pivot, and/or tilt. The following mandatory minimum safety requirements must be installed with this machine:

• Safety fence enclosing machine movement areas

• Lockable electrical interlocks on all gates properly interfaced to the terminals shown here, to disable the machine movement when any gate is opened.

• Signs to alert personnel to these hazards placed prominently around fenced in area.

Local codes may have additional requirements.

PT----------

Lesões corporais graves ou a morte podem ocorrer às pessoas nas proximidades das máquinas/sistemas que atravessam, são elevados, estendidos, articulados e/ou inclinados. Os seguintes requisitos mínimos de segurança, obrigatórios, devem

- Cercado de segurança englobando as áreas de movimentação da máquina
- Bloqueadores elétricos em todos os portões, com interface apropriada com os terminais mostrados aqui, que desativam o movimento da máquina quando qualquer portão é aberto.
- Sinais para alertar o pessoal para estes riscos colocados proeminentemente ao redor de áreas cercadas.

Códigos locais podem ter requisitos adicionais.

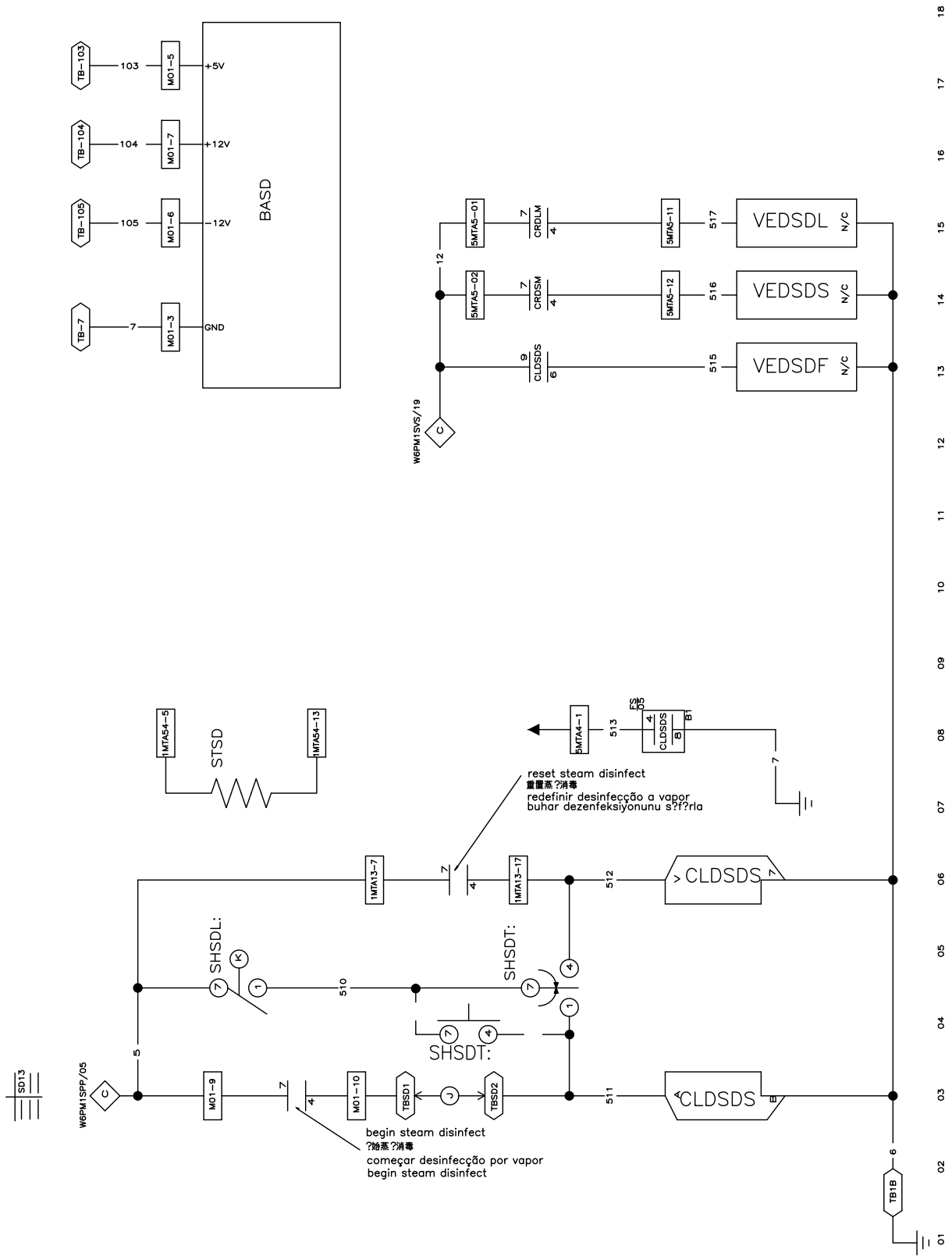

Steam disinfect
蒸?消毒
Desinfecção a vapor
Buhar dezenfeksiyonu

W6PM1SSDX

PELLERIN MILNOR CORPORATION

2025132A

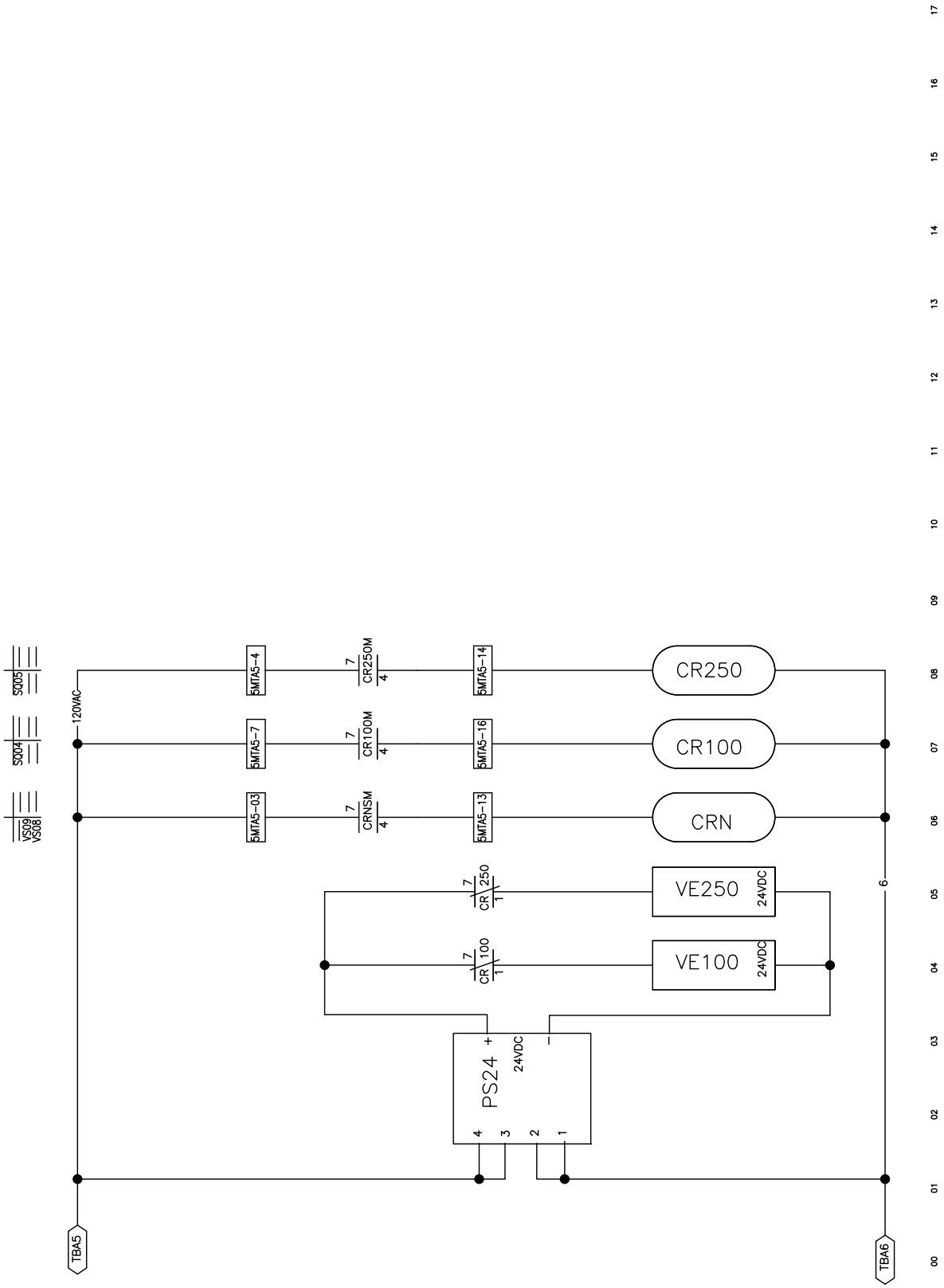

Delicate Care

Roupas delicadas

W6PM1SSQP

PELLERIN MILNOR CORPORATION

2023352A

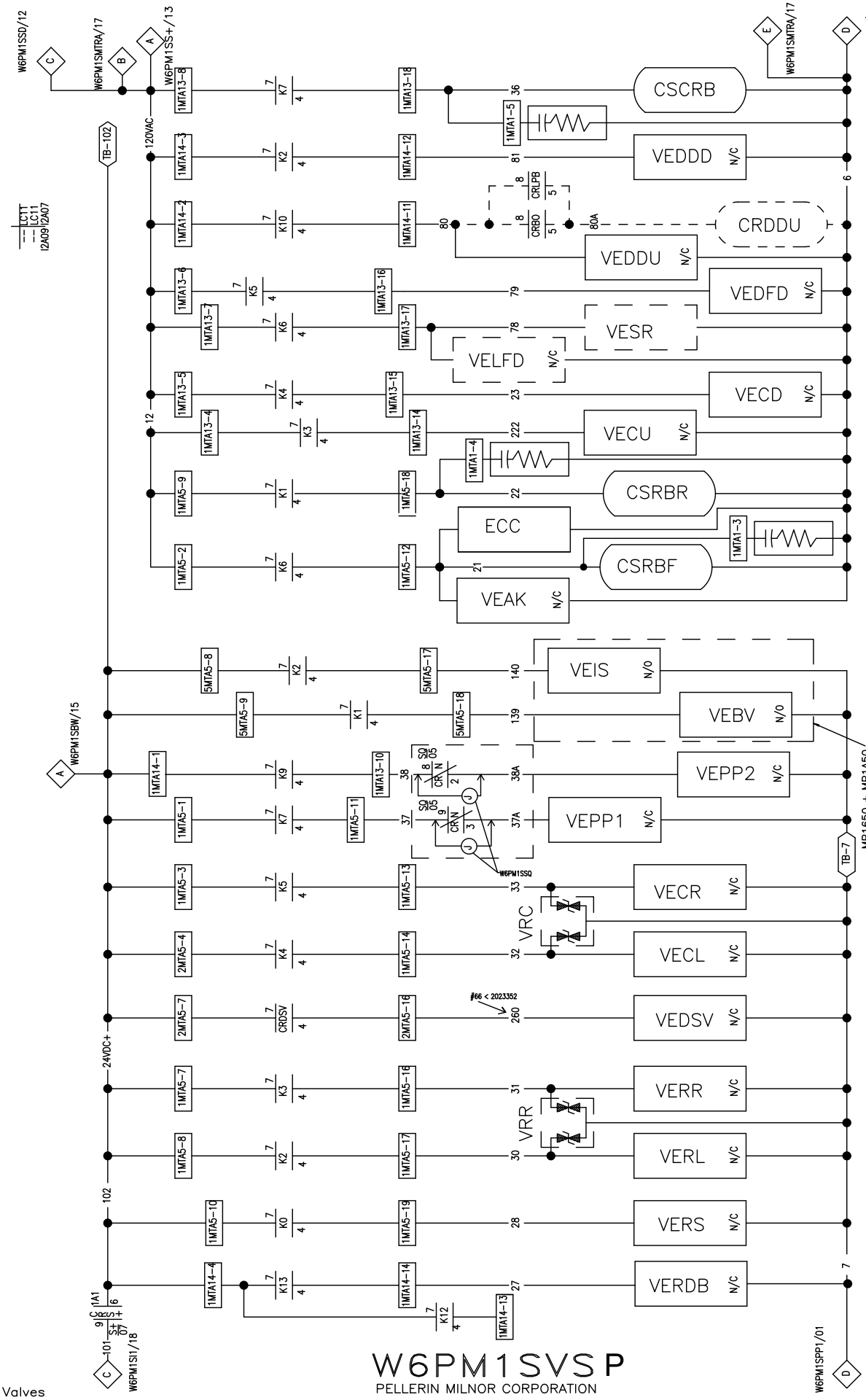

Valves
válvulas

English-Turkish / İngilizce -Türkçe

3

The text in this Circuit Guide is provided in the following languages:

1. **English**
2. Turkish

Bu Devre Kılavuzu'nda metni aşağıdaki dillerde sağlanır:

1. Englisch
2. Türkisch

Read the separate safety manual before installing, operating, or servicing

Işletme, yüklemeden önce ayrı emniyet kılavuzunu okuyun veya hizmet

How to Get the Necessary Repair Components

You can get components to repair your machine from the approved supplier where you got this machine. Your supplier will usually have the necessary components in stock. You can also get components from the Milnor® factory.

Tell the supplier the machine model and serial number and this data for each necessary component:

- The component number from this manual
- The component name if known
- The necessary quantity
- The necessary transportation requirements
- The schematic number
- If the component is a motor or electrical control, give the nameplate data from the used component.

To write the Milnor factory:

Pellerin Milnor Corporation
Post Office Box 400
Kenner, LA 70063-0400
United States

Telephone: 504-467-2787
Fax: 504-469-9777
Email: parts@milnor.com

Gerekli Onarım Bileşenleri Nasıl Gidilir?

Sen bu makine var onaylı tedarikçi makinenizi tamir parçaları alabilirsiniz. Sizin tedarikçi genellikle stok gerekli bileşenlere sahip olacak. Ayrıca Milnor ® fabrikadan bileşenleri alabilirsiniz.
Tedarikçi makinenin modeli ve seri numarası ve gerekli olan her bileşen için bu verileri söyle:

- Bu kılavuzda gelen bileşen numarası
- bileşen adı varsa
- gerekli miktar
- gerekli ulaşım şartları
- şematik numarası bilinen
- bileşen motor veya elektrik kontrol ise, kullanılan bileşen etiket verilerini verir.

Milnor fabrika yazmak için:

Pellerin Milnor Corporation
Post Office Box 400
Kenner, LA 70063-0400
United States

telefon: 504-467-2787
Fax: 504-469-9777
e-posta: parts@milnor.com

BA		
BAD-1	W6PM1SBW	08BSADCT
BAD-1	W6PM1SBWB	08BSADCT
BAD-1	W6PM1SBWC	08BSADCT
BAD-1	W6PM1SBWD	08BSADCT
BASD	W6PM1SSD	08B1BSDT
BBB-1	W6PM1SBW	08BSBB1T
BBB-1	W6PM1SBWB	08BSBB1T
BBB-1	W6PM1SBWC	08BSBB1T
B-CMR	W6PM1SLB	08BAMVNC
BDA-1	W6PM1SBW	08BSDACHT
BDA-1	W6PM1SBWB	08BSDACHT
BDA-1	W6PM1SBWC	08BSDACHT
BDA-1	W6PM1SBWD	08BSDACHT
BDFP	W6PM1SEC	08EFD320C
BDVFD	W6PM1SD	08BSEVFD5U
BDVFD	W6PM1SD	08BSEVFD5V
BFPC	W6PM1SEC	08EFD320C
BFPI	W6PM1SEC	08BSEDIFAT
BIO-1	W6PM1SBW	08BS816CT
BIO-1	W6PM1SBWB	08BS816CT
BIO-1	W6PM1SBWC	08BS816CT
BIO-1	W6PM1SBWD	08BS816CT
BIO-2	W6PM1SBW	08BS816CT
BIO-2	W6PM1SBWB	08BS816CT
BIO-2	W6PM1SBWC	08BS816CT
BIO-2	W6PM1SBWD	08BS816CT
BIO-3	W6PM1SBW	08BS816CT
BIO-3	W6PM1SBWB	08BS816CT
BIO-3	W6PM1SBWC	08BS816CT
BIO-3	W6PM1SBWD	08BS816CT
BIO-4	W6PM1SBWB	08BS816CT
BIO-4	W6PM1SBWC	08BS816CT
BIO-4	W6PM1SBWD	08BS816CT
BIO-5	W6PM1SBWC	08BS816CT
BIO-5	W6PM1SBWD	08BS816CT
BMTH	W6PM1SBW	08BS5MTHAT
BMTH	W6PM1SBWB	08BS8MTHAT
BMTH	W6PM1SBWC	08BS8MTHAT
BMTH	W6PM1SBWD	08BS8MTHAT
BO24-1	W6PM1SBW	08BSO24AT
BO24-1	W6PM1SBWB	08BSO24AT
BO24-1	W6PM1SBWC	08BSO24AT
BO24-1	W6PM1SBWD	08BSO24AT
BPB	W6PM1SBW	08BSPDT
BPB	W6PM1SBWB	08BSPE2T
BPB	W6PM1SBWC	08BHGQ7BS
BPB	W6PM1SBWD	08BHMX6LAT
BPC-1	W6PM1SBW	96RH708A3T
BPC-1	W6PM1SBWB	96RH708A3T

BWPS	W6PM1SI2	08BNWPSAT
BWPS	W6PM1SI2A	08BNWPSAT
BWPS	W6PM1SI2B	08BNWPSAT
CB		
CBFAN1	W6PM1SMTR	09FTB010T
CBPRD	W6PM1SMTR	09FTB016T
CD		
CD1	W6PM1SPC1	09CF002037
CDCH	W6PM1SPC1	09CA0100A37
CDD	W6PM1SPC1	09CF002037
CL		
CLDSDS <3-2025	W6PM1SSD	09CL2C-C37
CLDSDS >3-2025	W6PM1SSD	09CL2C-D37
CP		
CPCBL	W6PM1SI2	09RPE011
CPCBL	W6PM1SI2A	09RPE011
CPCBL	W6PM1SI2B	09RPE011
CPGCR	W6PM1SI1	09RPE010R
CPGCR	W6PM1SI1A	09RPE010R
CPGCR	W6PM1SI1B	09RPE010R
CPGCS	W6PM1SI1	09RPE010E
CPGCS	W6PM1SI1A	09RPE010E
CPGCS	W6PM1SI1B	09RPE010E
CPLC	W6PM1SLC	09RPE018LBA
CPLCC	W6PM1SLC	09RPE018LBC
CR		
CR100	W6PM1SSQ	09C024D37
CR250	W6PM1SSQ	09C024D37
CRBO	W6PM1SLC	09C024D37
CRCBL	W6PM1SPC1	09C024D37
CRD	W6PM1SPC1	09C024D37
CRDDU	W6PM1SVS	09C024D37
CRFLH	W6PM1SPP1	09C024D24
CRFLL	W6PM1SPP1	09C024D24
CRGC	W6PM1SI1	09C024D37
CRGC	W6PM1SI1A	09C024D37
CRGC	W6PM1SI1B	09C024D37
CRH	W6PM1SPC1	09C024D37
CRN	W6PM1SSQ	09C024D37
CRPRB	W6PM1SPC1	09C024D37
CRRB	W6PM1SPC1	09C024D37
CRS+	W6PM1SS+	09C024D37
CRSGG	W6PM1SS+	09C024D37
CS		
CSA	W6PM1SPC1	09MC08B337
CSCRB	W6PM1SVS	09MC08B337
CSFAN1	W6PM1SS+	09MC08B337
CSFAN2	W6PM1SS+	09MC08B337
CSFAN3	W6PM1SS+	09MC08B337
CSHP(MP16xx-H)	W6PM1SS+	09MC08G337

CSHP(MP16xx-L)	W6PM1SS+	09MC08L337
CSHP(MP1Axx-H)	W6PM1SS+	09MC08L337
CSHP(MP1Axx-L)	W6PM1SS+	09MC08U337
CSPRP	W6PM1SMTR	09MC08B337
CSRBF	W6PM1SVS	09MC08B337
CSRBR	W6PM1SVS	09MC08B337
CSRC	W6PM1SS+	09MC08C337
EB		
EBSG	W6PM1SS+	09H015
EC		
ECC	W6PM1SVS	38C201
ECH	W6PM1SS+	38C202
EF		
EF1	W6PM1SHV	09FF005AWN
EF2	W6PM1SHV	09FF005AWN
EF37	W6PM1SHV	09FF006AMA
EFF1	W6PM1SMTR	09FF002AWN
EFF2	W6PM1SMTR	09FF002AWN
EL		
ELES	W6PM1SS+	09N507E
ELES	W6PM1SS+	09N507E
ELES	W6PM1SS+	09N507E
ELES	W6PM1SS+	09N507E
ELLB	W6PM1SLB	09J092A12
ELM	W6PM1SPC1	09H025V37
ELPRP	W6PM1SPP	09J060A37
ELPRP	W6PM1SPP1	09J060A37
ELPTT	W6PM1SPP	09J060A37
ELPTT	W6PM1SPP1	09J060A24
ELSG	W6PM1SS+	09J060WH37
ELSGF	W6PM1SS+	09H025V37
ES		
ES24	W6PM1SBW	08PSL10C224
ES24	W6PM1SBWB	08PSL10C224
ES24	W6PM1SBWC	08PSL10C224
ES24	W6PM1SSQ	08PSL10C224
ES24	W6PM1SBWD	08PSL10C224
ESLB	W6PM1SLB	08PSS3401T
ESLC	W6PM1SLC	09RPE018LBD
ESPS	W6PM1SBW	08PSS3401T
ESPS	W6PM1SBWB	08PSS3401T
ESPS	W6PM1SBWC	08PSS3401T
ESPS	W6PM1SBWD	08PSS3401T
ESPS2	W6PM1SBWC	08PSS2401T
ESPS2	W6PM1SBWD	08PSS2402
ET		
ETCRB	W6PM1SMTR	09FTD0037T
ETFAN1	W6PM1SMTR	09FTD0010T
ETFAN2	W6PM1SMTR	09FTD0010T
ETFAN3	W6PM1SMTR	09FTD0010T

ETHP(MP16xx-H)	W6PM1SMTR	09FTD0121T
ETHP(MP16xx-L)	W6PM1SMTR	09FTD0230T
ETHP(MP1Axx-H)	W6PM1SMTR	09FTD0230T
ETHP(MP1Axx-L)	W6PM1SMTR	09FTD0040T
ETPRP	W6PM1SMTR	09FTD0037T
ETRB	W6PM1SMTR	09FTD0037T
ETRC	W6PM1SMTR	09FTC0016T
EVFLV	W6PM1SMTR	09UA050A32
EX		
EX37	W6PM1SHV	09UA050A37
EX37	W6PM1SHV	09UA050AAB
EX37	W6PM1SHV	09UA050A98
EXFHV	W6PM1SMTR	09UA050AAB
EXFHV	W6PM1SMTR	09UA050B98
KB		
KBMP	W6PM1SKP	08ND0206N
KBMP	W6PM1SKPA	08ND5X6GC
MT		
MTCRB	W6PM1SMTR	MESSAGE SN
MTDF	W6PM1SMTR	13AF210071
MTHF1	W6PM1SMTR	MESSAGE SN
MTHF2	W6PM1SMTR	MESSAGE SN
MTHP	W6PM1SMTR	MESSAGE SN
MTPRP	W6PM1SMTR	MESSAGE SN
MTRB	W6PM1SMTR	MESSAGE SN
MTRC	W6PM1SMTR	MESSAGE SN
PT1	W6PM1SBWB	PT1A/B
PT1	W6PM1SBWC	PT1A/B
PT1	W6PM1SBWD	PT1A/B
PT1A	MP1550/1640/1650	09N700B
PT1B	MP1656/1556	09N700D
PX		
PXCB1	W6PM1SI1	09RPS12ADS
PXCB1	W6PM1SI1A	09RPS12ADS
PXCB1	W6PM1SI1B	09RPS12ADS
PXCB2	W6PM1SI1	09RPS12ADS
PXCB2	W6PM1SI1A	09RPS12ADS
PXCB2	W6PM1SI1B	09RPS12ADS
PXCT	W6PM1SI1	09RPS30ADS
PXCT	W6PM1SI1A	09RPS30ADS
PXCT	W6PM1SI1B	09RPS30ADS
PXDDD	W6PM1SI2	09RPS30ADS
PXDDD	W6PM1SI2A	09RPS30ADS
PXDDD	W6PM1SI2B	09RPS30ADS
PXDDU	W6PM1SI2	09RPS30ADS
PXDDU	W6PM1SI2A	09RPS30ADS
PXDDU	W6PM1SI2B	09RPS30ADS
PXLCD	W6PM1SI2	09RPS30ADS
PXLCD	W6PM1SI2A	09RPS30ADS
PXLCD	W6PM1SI2B	09RPS30ADS

PXLCU	W6PM1SI2	09RPS30ADS
PXLCU	W6PM1SI2A	09RPS30ADS
PXLCU	W6PM1SI2B	09RPS30ADS
PXSB	W6PM1SI1	09RPS18ADS
PXSB	W6PM1SI1A	09RPS18ADS
PXSB	W6PM1SI1B	09RPS18ADS
PXSL	W6PM1SI1A	09RPS18ADS
PXSL	W6PM1SI1B	09RPS18ADS
PXSM	W6PM1SI1	09RPS30ADS
PXSM	W6PM1SI1A	09RPS30ADS
PXSM	W6PM1SI1B	09RPS30ADS
PXSS	W6PM1SI1B	09RPS30ADS
PXST	W6PM1SI1	09RPS30ADS
PXST	W6PM1SI1A	09RPS30ADS
PXST	W6PM1SI1B	09RPS30ADS
PXSU	W6PM1SI1	09RPS30ADS
PXSU	W6PM1SI1A	09RPS30ADS
PXSU	W6PM1SI1B	09RPS30ADS
RS		
RS01	W6PM1SLB	ECEUMTRES
RS02	W6PM1SBWC	ECEUMTRES
RS03	W6PM1SBWC	ECEUV8R
RS03	W6PM1SBWD	ECEUV8R
SH		
SHCMD	W6PM1SMTR	09N042204
SHCMD	W6PM1SS+	09N042204
SHDA	W6PM1SAIA	09N405M210
SHES	W6PM1SS+	09N506
SHES	W6PM1SS+	09N507F
SHES	W6PM1SS+	09N507F
SHES	W6PM1SS+	09N507F
SHES	W6PM1SS+	09N507F
SHESR	W6PM1SS+	09N506
SHFR	W6PM1SI2	09N405PB10
SHFR	W6PM1SI2A	09N405PB10
SHFR	W6PM1SI2B	09N405PB10
SHL	W6PM1SS+	09RS0001
SHMD	W6PM1SI2A	09N405M210
SHMD	W6PM1SI2B	09N405M210
SHPE1	W6PM1SS+	09R014A
SHPE2	W6PM1SS+	09R014A
SHPL	W6PM1SAI	MESSAGE EW
SHPRP	W6PM1SPP	09N405M210
SHPRP	W6PM1SPP1	09N405M210
SHR	W6PM1SS+	09RS0001
SHRFR	W6PM1SI2	09N405PB10
SHRFR	W6PM1SI2A	09N405PB10
SHRFR	W6PM1SI2B	09N405PB10
SHS+	W6PM1SS+	09N405PB10
SHS+R	W6PM1SS+	09N405PB10

SHSC	W6PM1SI1	09N405PY10
SHSC	W6PM1SI1A	09N405PY10
SHSC	W6PM1SI1B	09N405PY10
SHSDL	W6PM1SSD	09N127C
SHSDT	W6PM1SSD	09N405S320
SHSMA	W6PM1SS+	09N405M220
SHSO	W6PM1SS+	09N404PR01
SK		
SKI	W6PM1SS+	09N127C
SKPRO	W6PM1SI1	09N127C
SKPRO	W6PM1SI1A	09N127C
SKPRO	W6PM1SI1B	09N127C
SL		
SLPPH	W6PM1SPP	09R014A
SLPPH	W6PM1SPP1	09R014A
SLPPL	W6PM1SPP	09R014A
SLPPL	W6PM1SPP1	09R014A
SM		
SMBTL	W6PM1SI1A	09RM01209S
SMBTL	W6PM1SI1B	09RM01209S
SMBTR	W6PM1SI1A	09RM01209S
SMBTR	W6PM1SI1B	09RM01209S
SP		
SPHT	W6PM1SI2B	27E7106C
VE		
VE100	W6PM1SSQ	96RH712A02
VE250	W6PM1SSQ	96RH712A02
VEBP	W6PM1SVS	96RH708E37
VEBV	W6PM1SVS	96R302B37
VECD	W6PM1SVS	96R301B37
VECD	W6PM1SVS	96R301B37
VECL	W6PM1SVS	96RH712A01
VECR	W6PM1SVS	96RH712A01
VECU	W6PM1SVS	96R301B37
VEDDD	W6PM1SVS	96R301B37
VEDDU	W6PM1SVS	96R301B37
VEDFD	W6PM1SVS	96R301B37
VEDSDF	W6PM1SSD	96R301B37
VEDSDL	W6PM1SSD	96R301B37
VEHV	W6PM1SBWB	96RH708E39
VEHV	W6PM1SBWC	96RH708E39
VEHV	W6PM1SBWD	96RH708E39
VEIS	W6PM1SVS	96R302B37
VELFD	W6PM1SVS	96R301B37
VEPP1	W6PM1SVS	96RH710E37
VEPP2	W6PM1SVS	96RH710E37
VEPRP	W6PM1SSP	96TCC2AA37
VERDB	W6PM1SVS	96RH713S01C1
VERL	W6PM1SVS	96RH709E37
VERR	W6PM1SVS	96RH709E37

VERS	W6PM1SVS	09RH712E37
VEW	W6PM1SS+	96TDC2AA37
VR		
VRC	W6PM1SVS	09ARC0055J
VRR	W6PM1SVS	09ARC0055J

Legend of Symbols
Sembollerin Açıklaması

BA = Printed Circuit Board
Baskılı Devre

CB = Circuit Breaker
Devre kesiciler

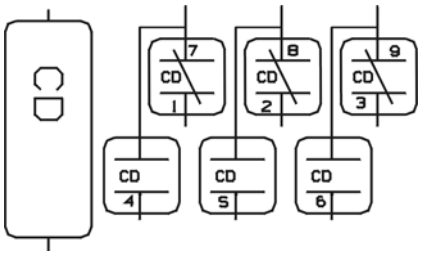

CD = Time Delay Relay
Zaman Gecikmesi Röle

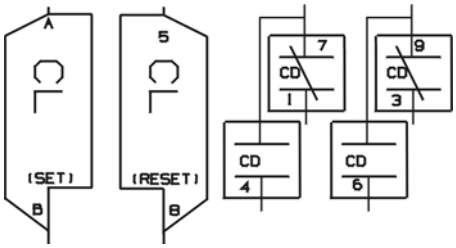

CL = Latch Relay
Röle mandal

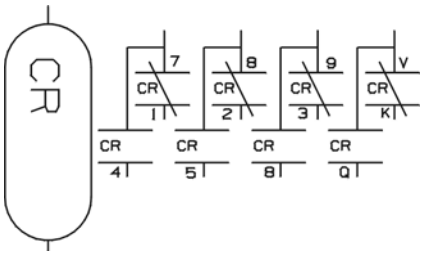

CR = Relay
Röle

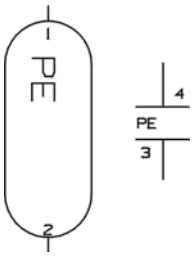

CP = Photo-Eye
Foğtoraf Göz

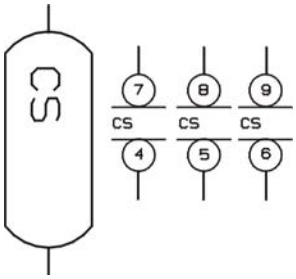

CS = Contactor/Motor Starter
Kontaktör / Motor Başlatan

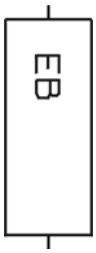

EB = Audible Signal
Sinyal

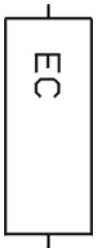

EC = Clutch
Debriyaj

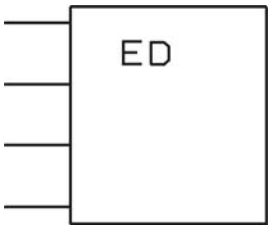

ED = Electronic Display
elektronik ekran

EF = Fuse
sigorta

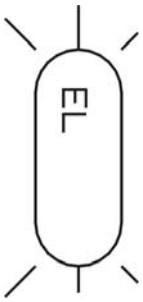

EL = Light
şıkı

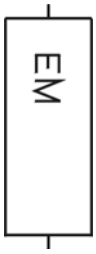

EM = Electro Magnatic Solenoid
Elektromanyetik Solenoid

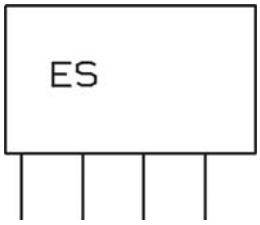

ES = Electronic Power Supply
Elektronik Güç Kaynağı

ET = Thermal Overload
termik Aş Yırı ük

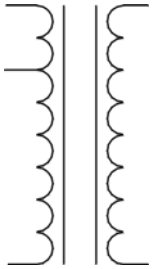

EX = Transformer
transformatör

KB = Keyboard/Keypad
Klavye / Tuş Takımı

MN = Electronic Monitor

Elektronik Monitör

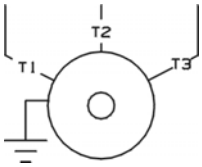

MR = Motor
Motor

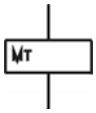

MT = Board Connector
Kurul Konnektör

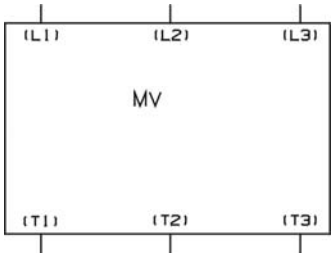

MV = Motor Inverter
Motor Inverter

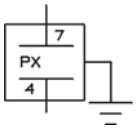

PX = Proximity Switch
Anahtarı

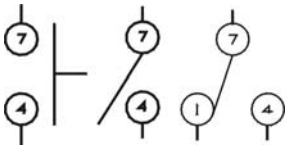

SH = Switch Hand Operated
Anahtarı el kumandalı

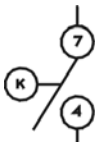

SK = Switch Key Operated
İşletilen Anahtar geçiş

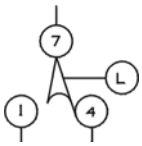

SL = Switch Level Operated
Anahtarı Seviye Operated

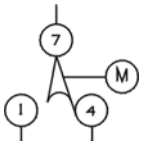

SM = Switch Mechanically Operated
Mekanik kumand galı eçiş

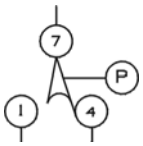

SP = Switch Pressure Operated
Anahtarı Basınç Kumandalı

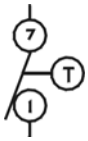

ST = Switch Temperature Operated
Anahtarı Sıcakl Opıkerated

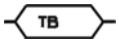

TB = Terminal Block
Terminal Bğluou

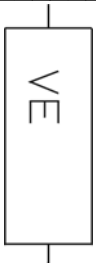

VE = Valve Electrically Operated
Vana elektrikle çalişabilme

WC = Wiring Connector
kablolama Connector

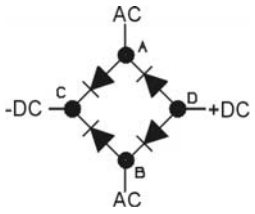

ZF = Rectifier
doğrultucu

The safety fence gate interlock switch installed by the end user must have a separate pole for each machine in the fenced area.
See MILNOR document BISUUI01 and BISUUI02 in the safety manual for additional information.

最终用户安装的安全围栏门联锁开关必须为围栏区域内的每台机器配备单独的杆。
有关更多信息，请参阅安全手册中的 MILNOR 文档 BISUUI01 和 BISUUI02。

エンド ユーザーが設置する安全フェンス ゲート インターロック スイッチには、フェンスで囲まれたエリア内の各マシンごとに個別のポールが必要です。
詳細については、安全マニュアルの MILNOR ドキュメント BISUUI01 および BISUUI02 を参照してください。

O interruptor de intertravamento do portão da cerca de segurança instalado pelo usuário final deve ter um poste separado para cada máquina na área cercada.
Consulte os documentos BISUUI01 e BISUUI02 da MILNOR no manual de segurança para obter informações adicionais.

Son kullanıcı tarafından monte edilen emniyet çit kapısı kilitleme anahtarı, çitle çevrili alandaki her makine için ayrı bir direğe sahip olmalıdır.
Ek bilgi için güvenlik kılavuzundaki MILNOR dokümanı BISUUI01 ve BISUUI02'ye bakın.

SAFETY FENCE GATE WIRING FOR
安全围栏门接线
安全柵ゲート配線
FIAÇÃO DE PORTÃO DE CERCA DE SEGURANÇA PARA
GÜVENLİK ÇİT KAPISI KABLOLAMA

SHUTTLES
班车
シャトル
Ônibus
Servisler
SEE W6SH5SS+, W6CD5SS+

2 STAGE PRESS
2级压榨
2段階プレス
Prensa de 2 estágios
2 Aşamalı Pres
SEE W6PR5SS+

SINGLE STAGE PRESS
单级压机
シングルステージプレス
Prensa de estágio único
Tek Kademeli Pres
SEE W6PM1SS+

CENTRIFUGAL EXTRACTORS
离心萃取机
遠心抽出機
Extrator centrífugo
Santrifüjlü Ekstraktör
SEE W6EX5S+

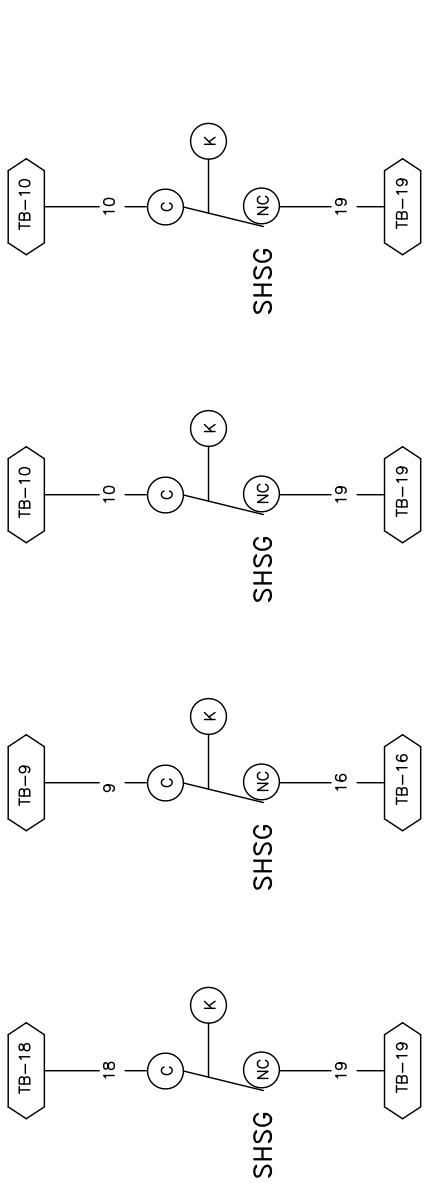

00 01 02 03 04 05 06 07 08 09 10 11 12 13

Customer installed Safety Fence
客户安装的安全围栏
顧客設置の安全フェンス
Cerca de segurança instalada pelo cliente
Müşteri Tarafından Kurulan Güvenlik Çiti

W6SYSSGX

PELLERIN MILNOR CORPORATION

2025256A

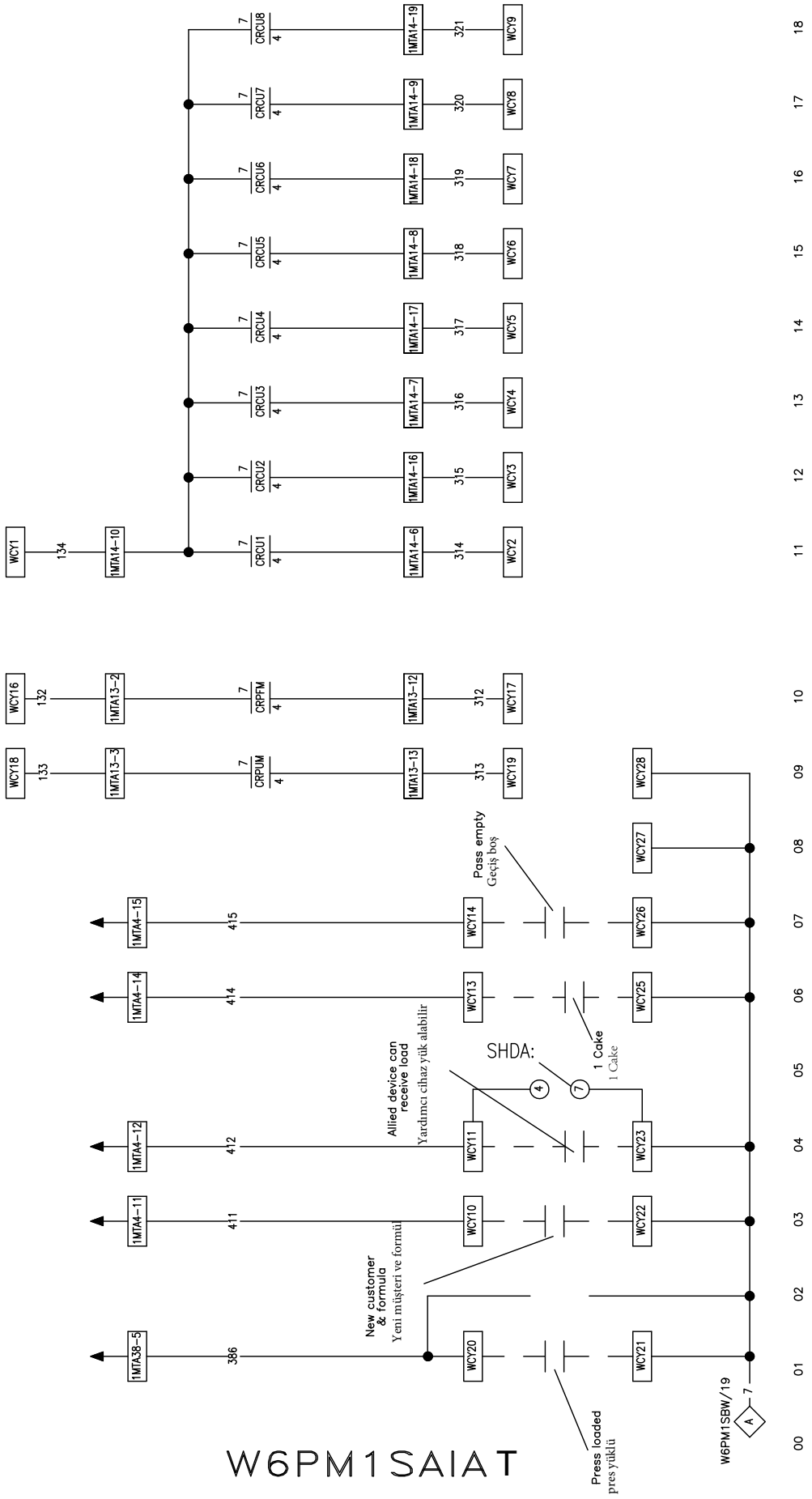

Allied Inputs
Yardımcı girişler

W6PM1SAIAT

PELLERIN MILNOR CORPORATION

2019206A

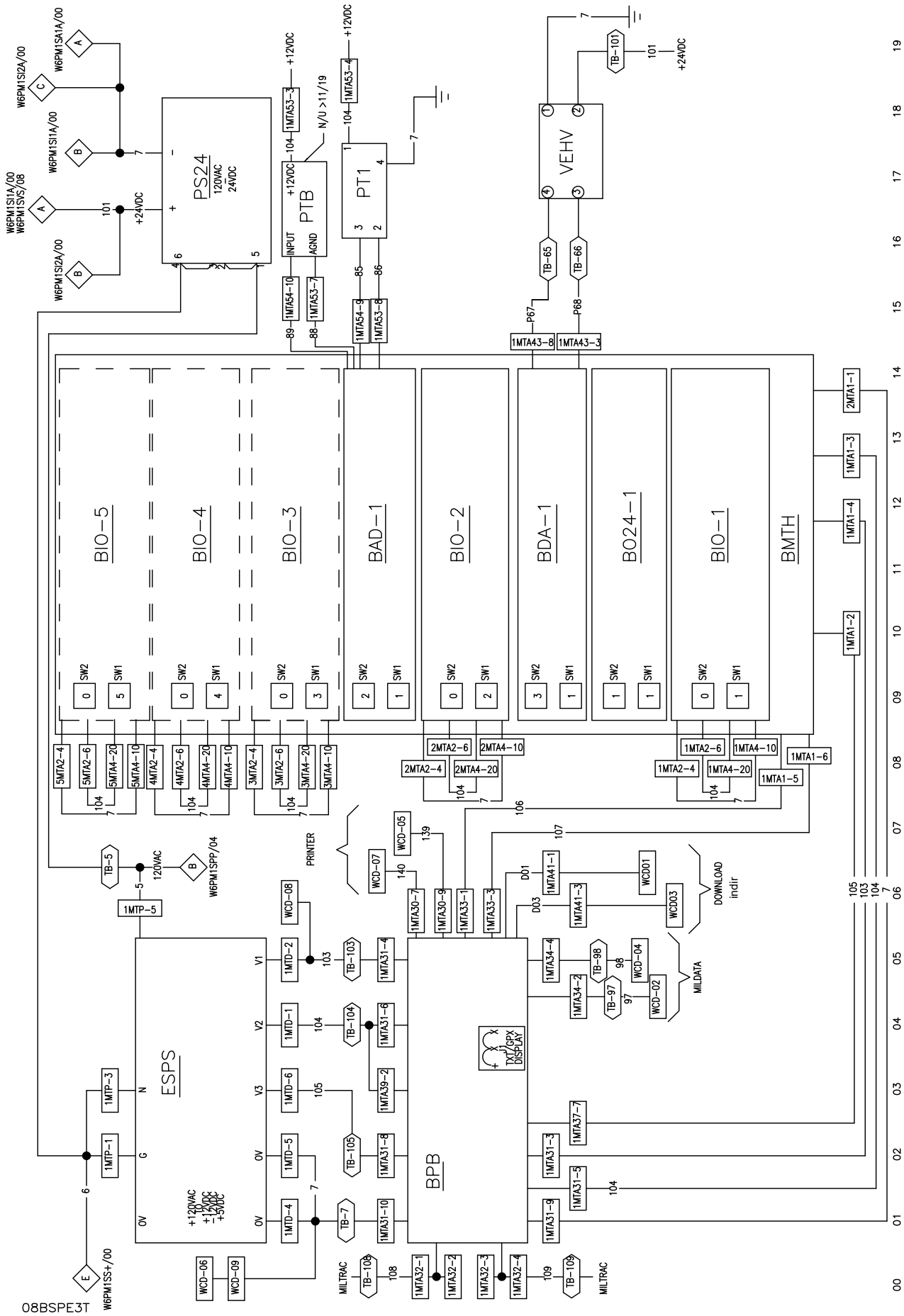

08BSPE3T
Wiring between the boards
Kartlar arasındaki kablolar

W6PM1SBWBT

PELLERIN MILNOR CORPORATION

2021144A

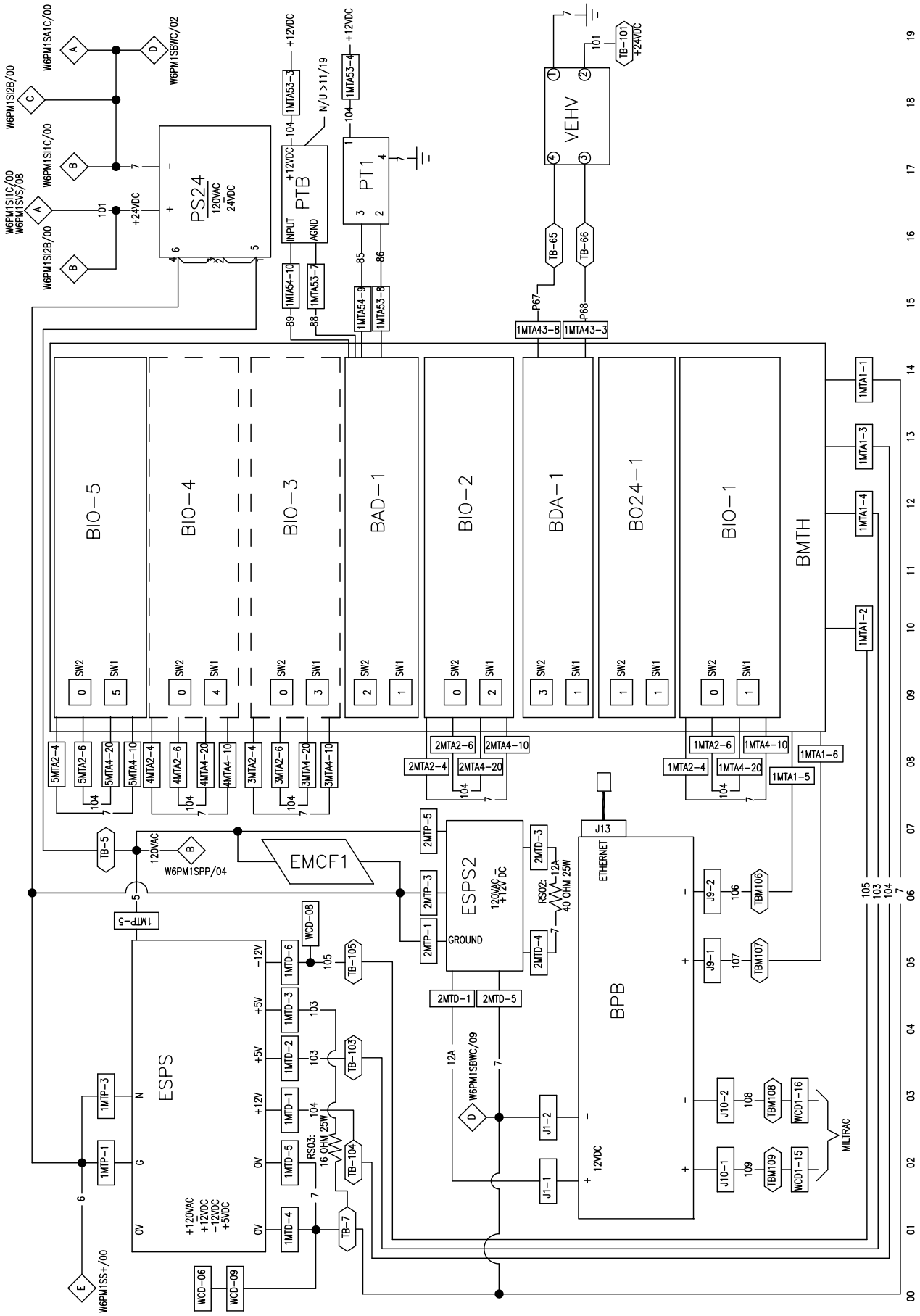

Q7
Wiring between the boards
电路板之间的布线
fiação entre as placas
panolar arasındaki kablolama

W6PM1SBWCX

PELLERIN MILNOR CORPORATION

2024474A

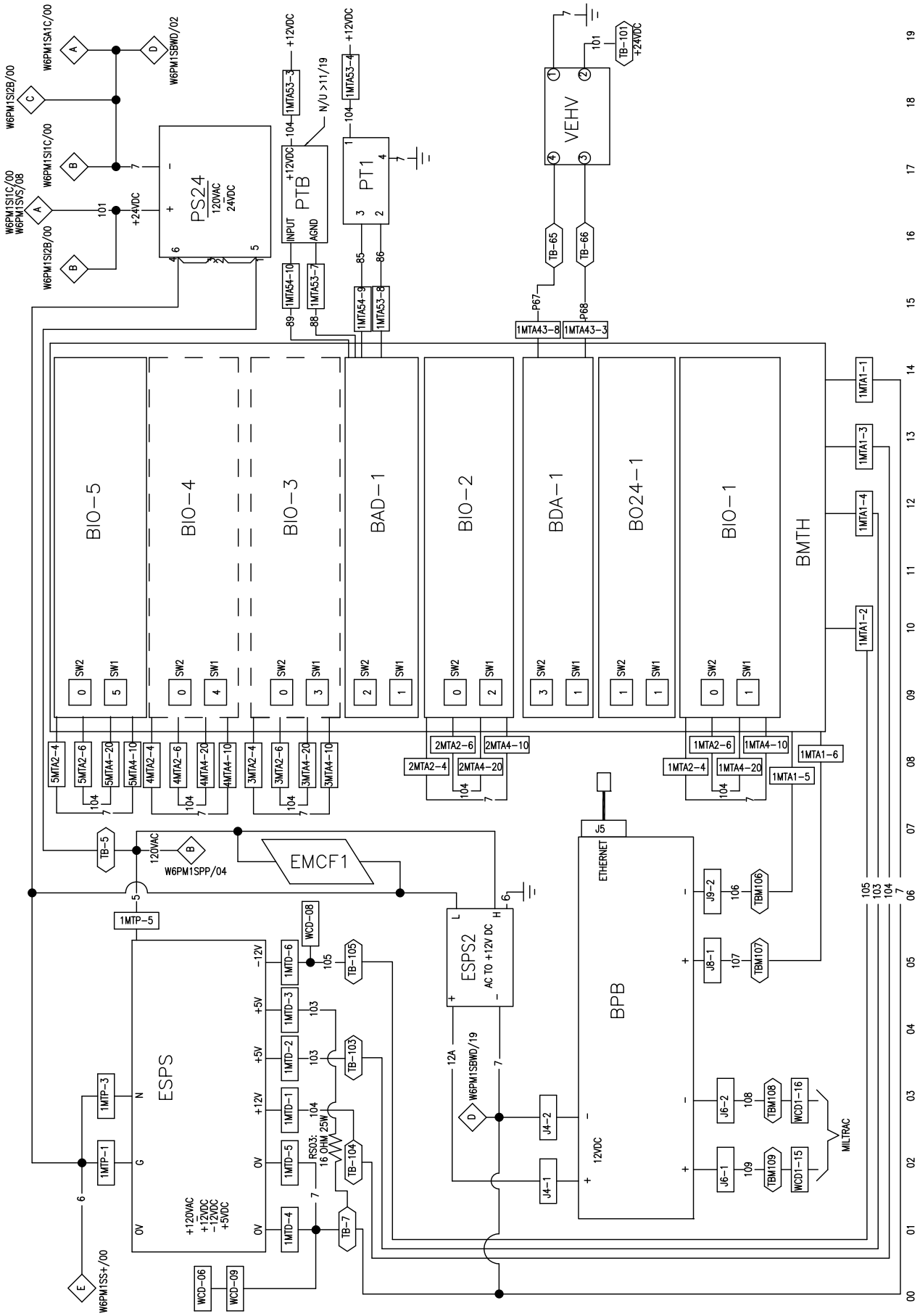

iMX6
Wiring between the boards
电路板之间的布线
fiação entre as placas
panolar arasındaki kablolama

W6PM1SBWDX

PELLERIN MILNOR CORPORATION

2024474A

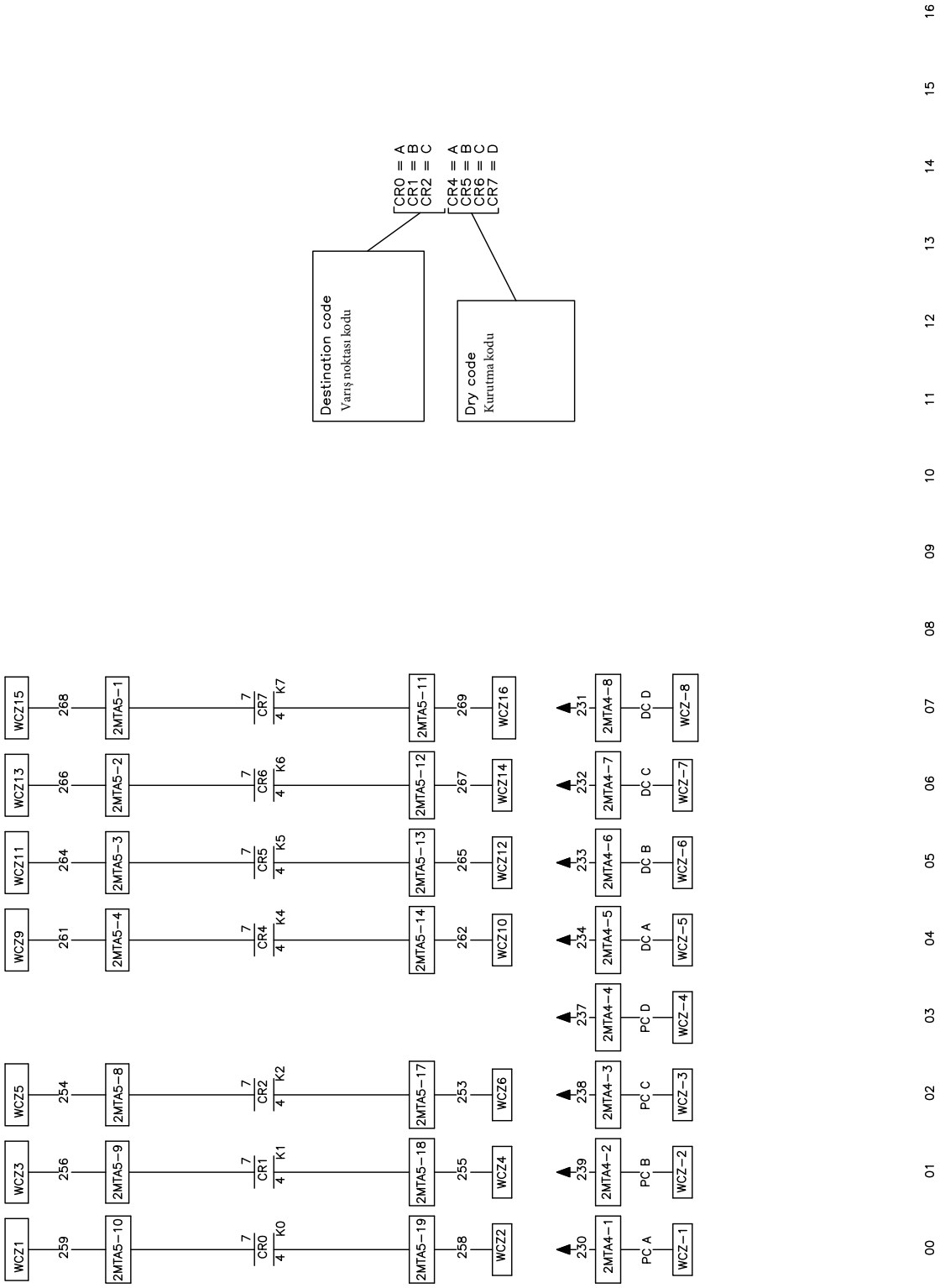

Data pass
Veri geçişi

W6PM1SDP2 T

PELLERIN MILNOR CORPORATION

2023196A

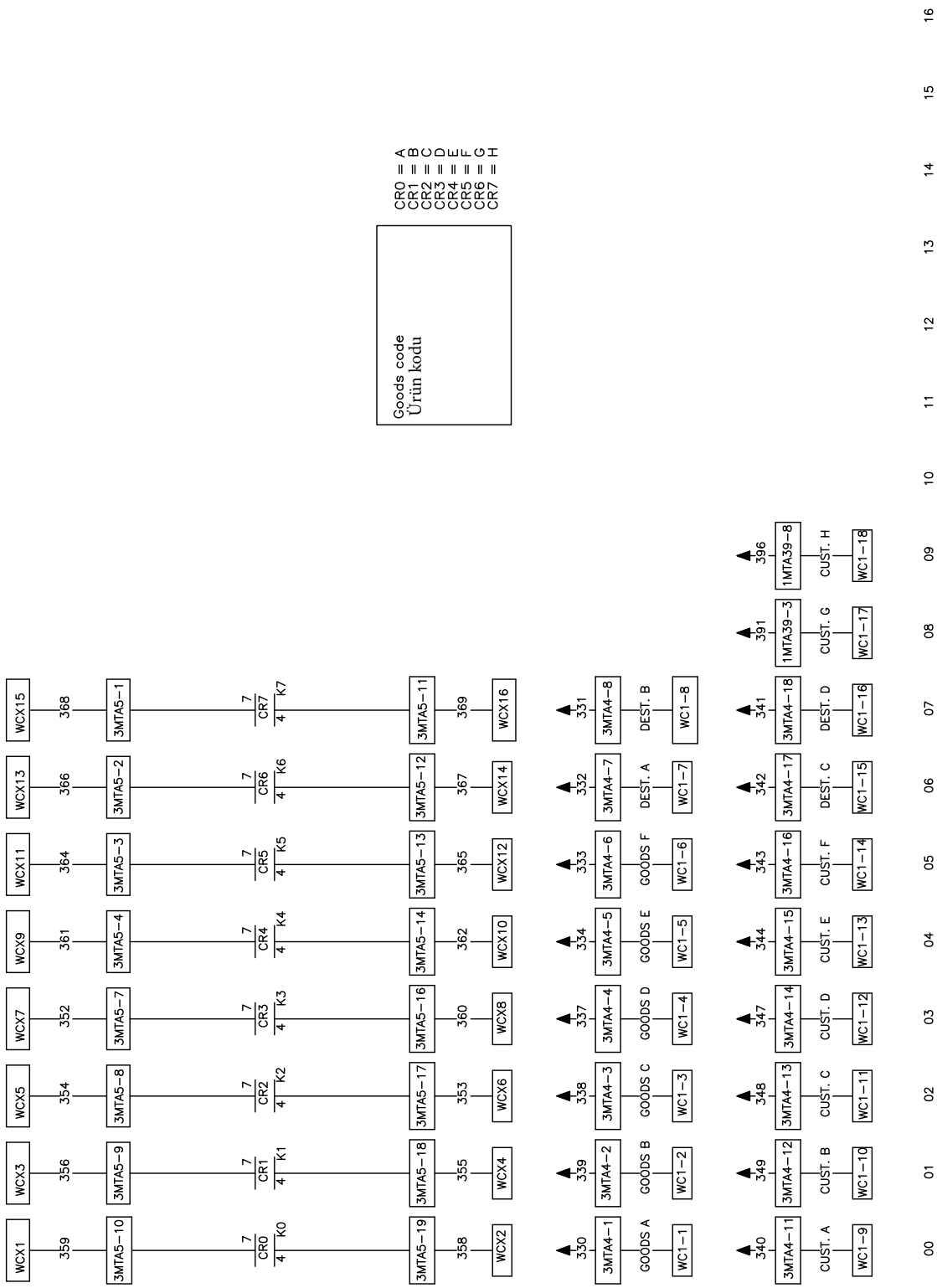

Data pass
Veri geçişi

W6PM1SDP3AT

PELLERIN MILNOR CORPORATION

2003174A

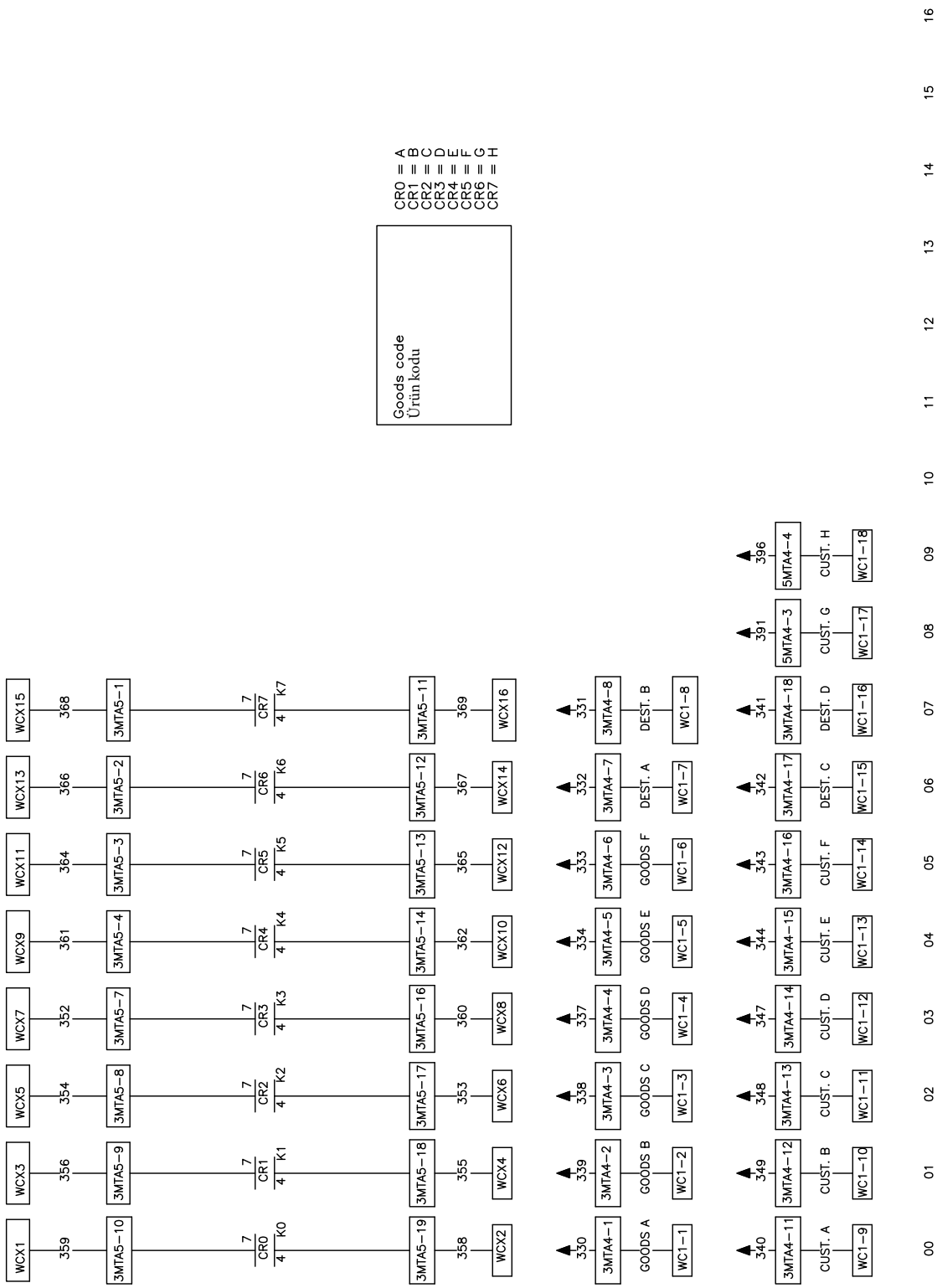

Data pass
Ürün kodu

W6PM1SDP3BT

PELLERIN MILNOR CORPORATION

2018512A

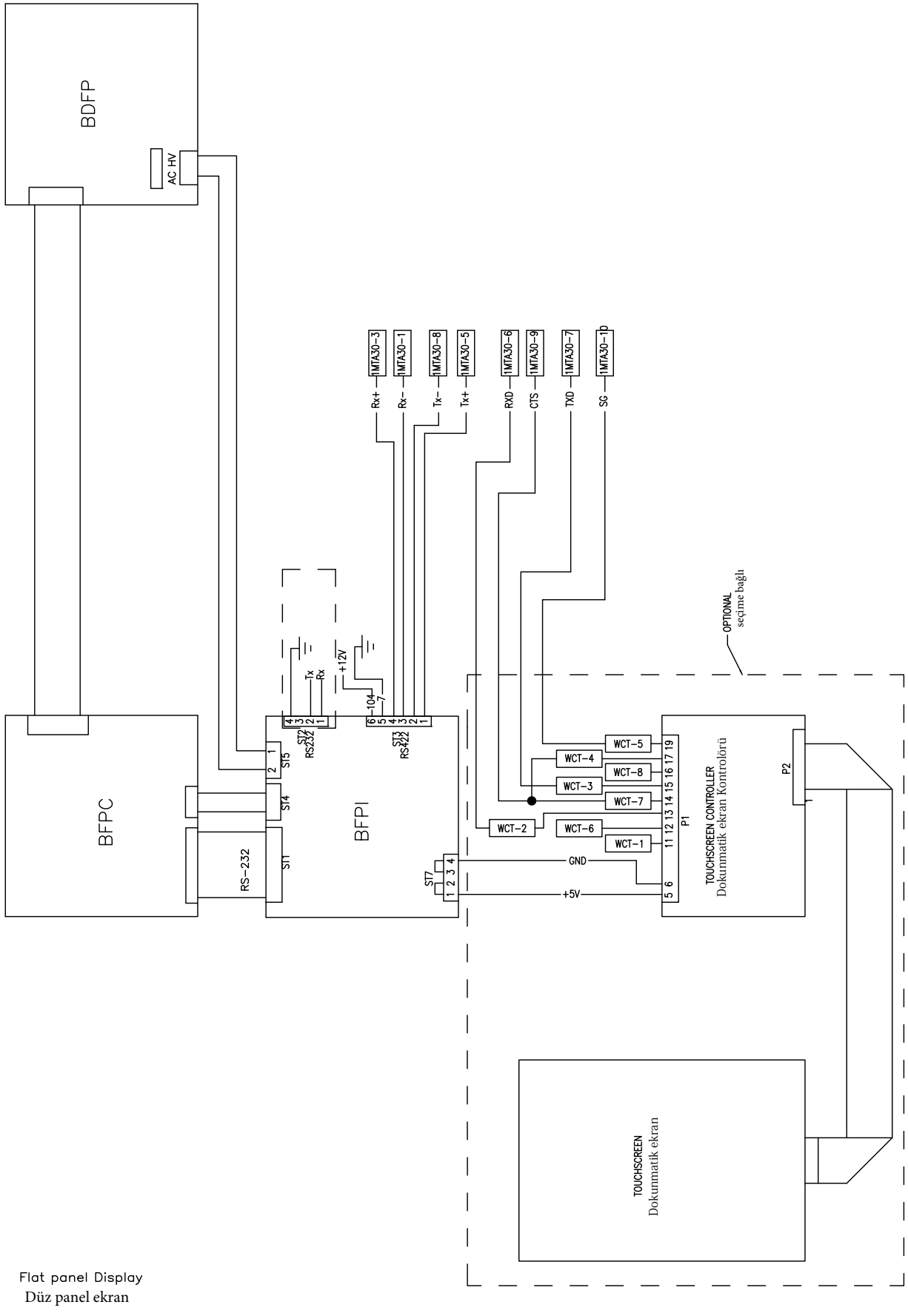

Flat panel Display
Düz panel ekran

W6PM1SECT

PELLERIN MILNOR CORPORATION

2016133A

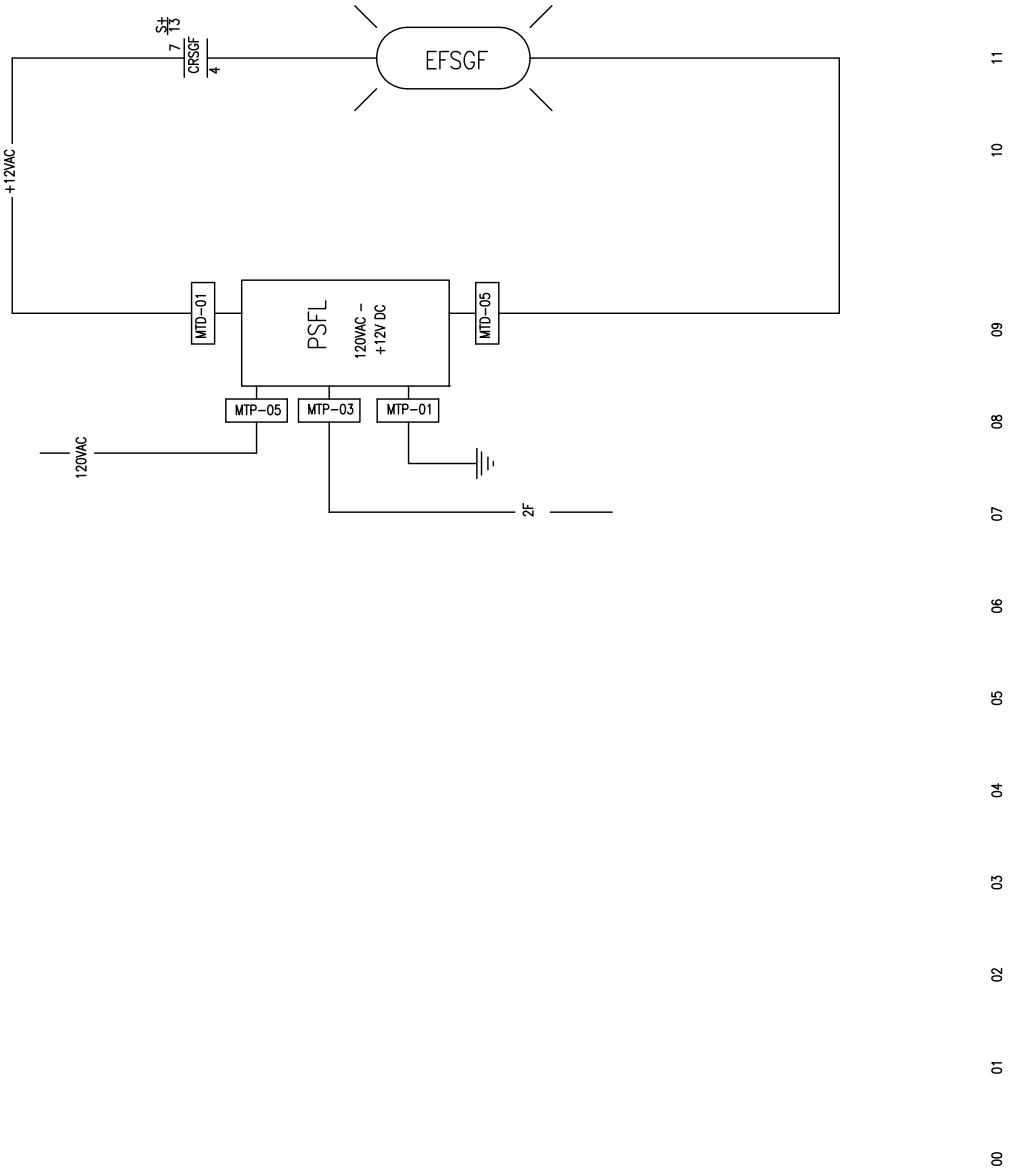

Optional flashing lights
Seçime bağlı yanıp sönün lambalar

W6PM1SFST

PELLERIN MILNOR CORPORATION

2016525A

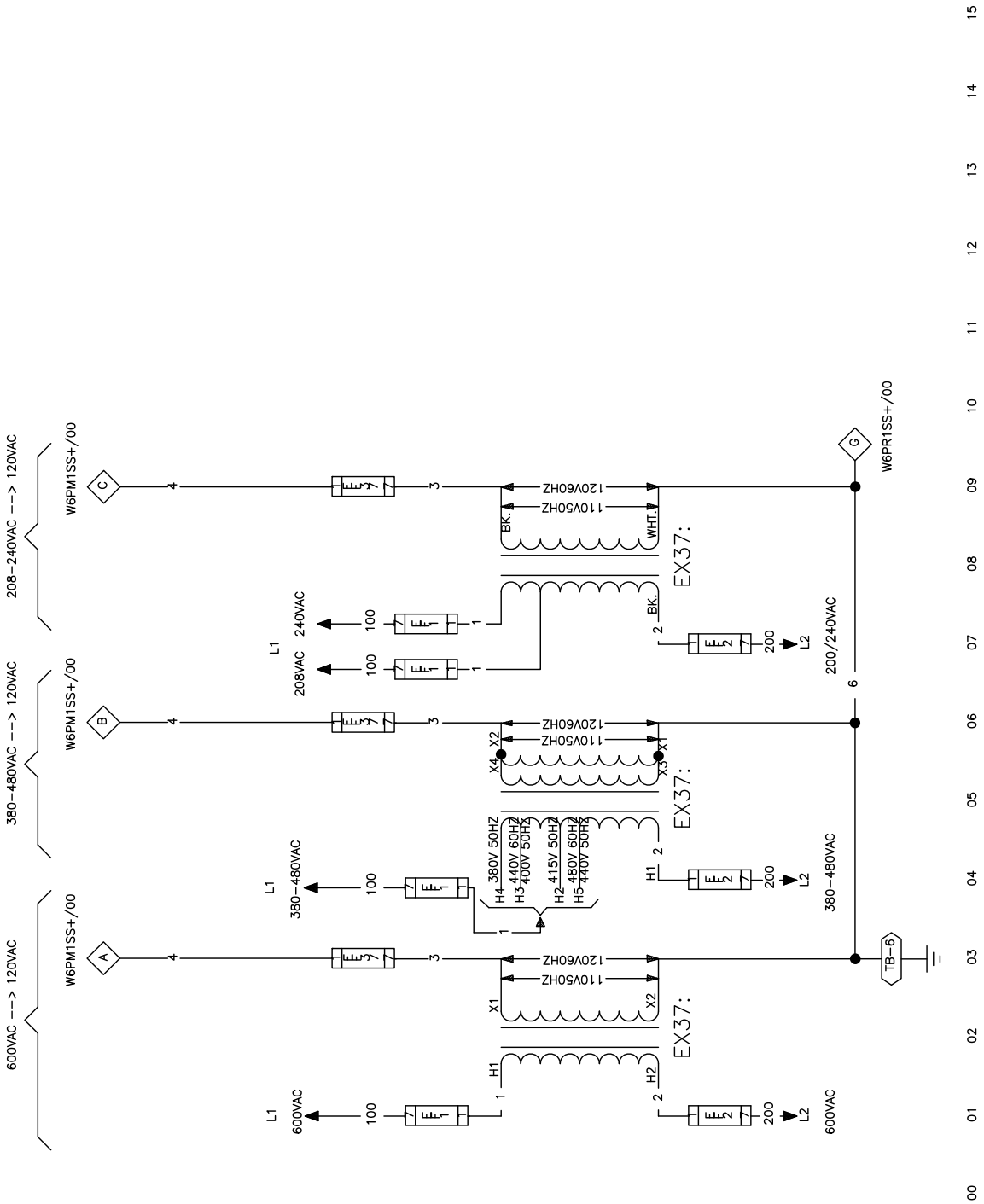

Control Circuit Power
Kontrol Devresi Gücü

W6PM1SHVT

PELLERIN MILNOR CORPORATION

99526A

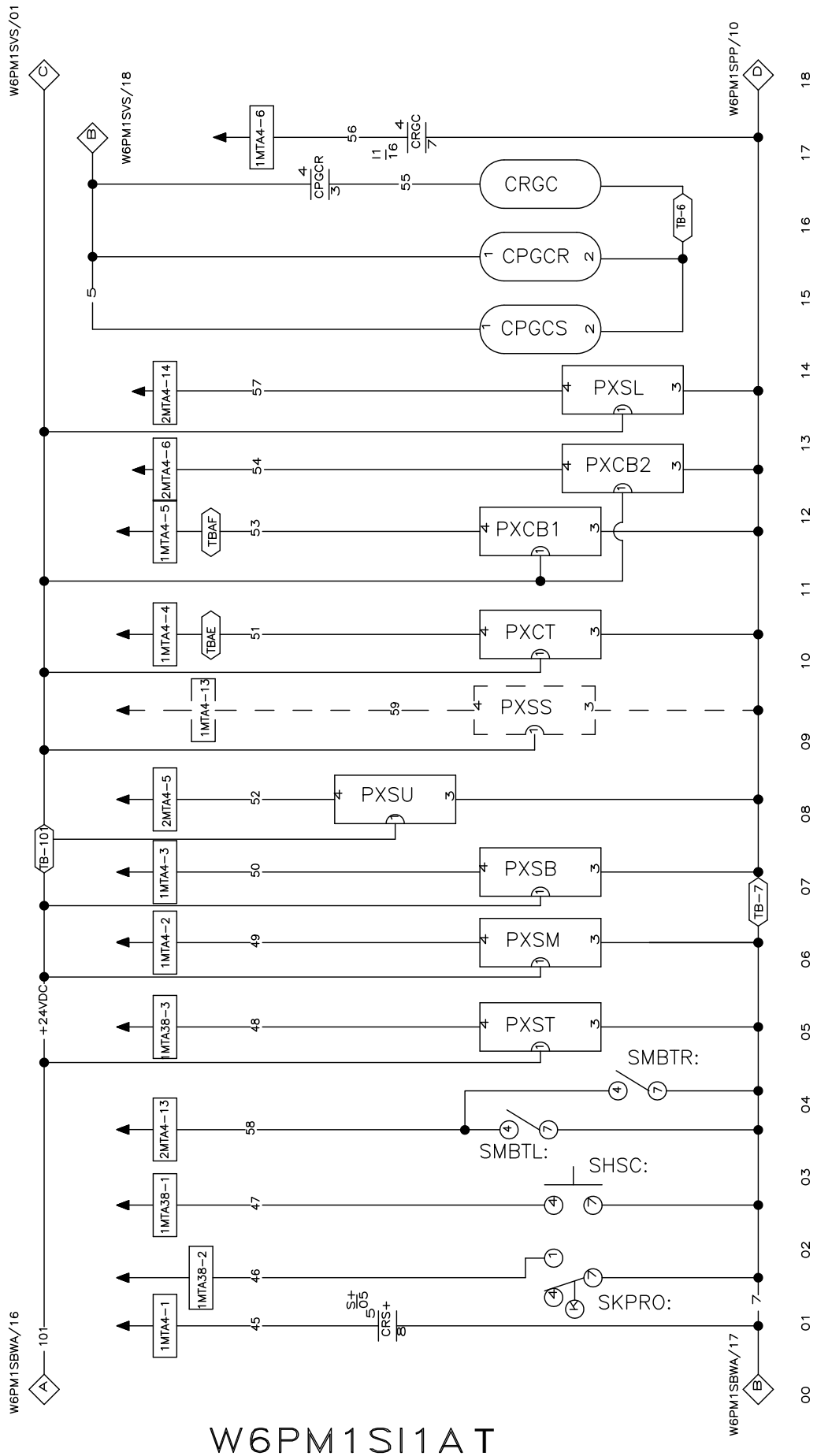

Inputs
Girişler

W6PM1SI1AT

PELLERIN MILNOR CORPORATION

2018486A

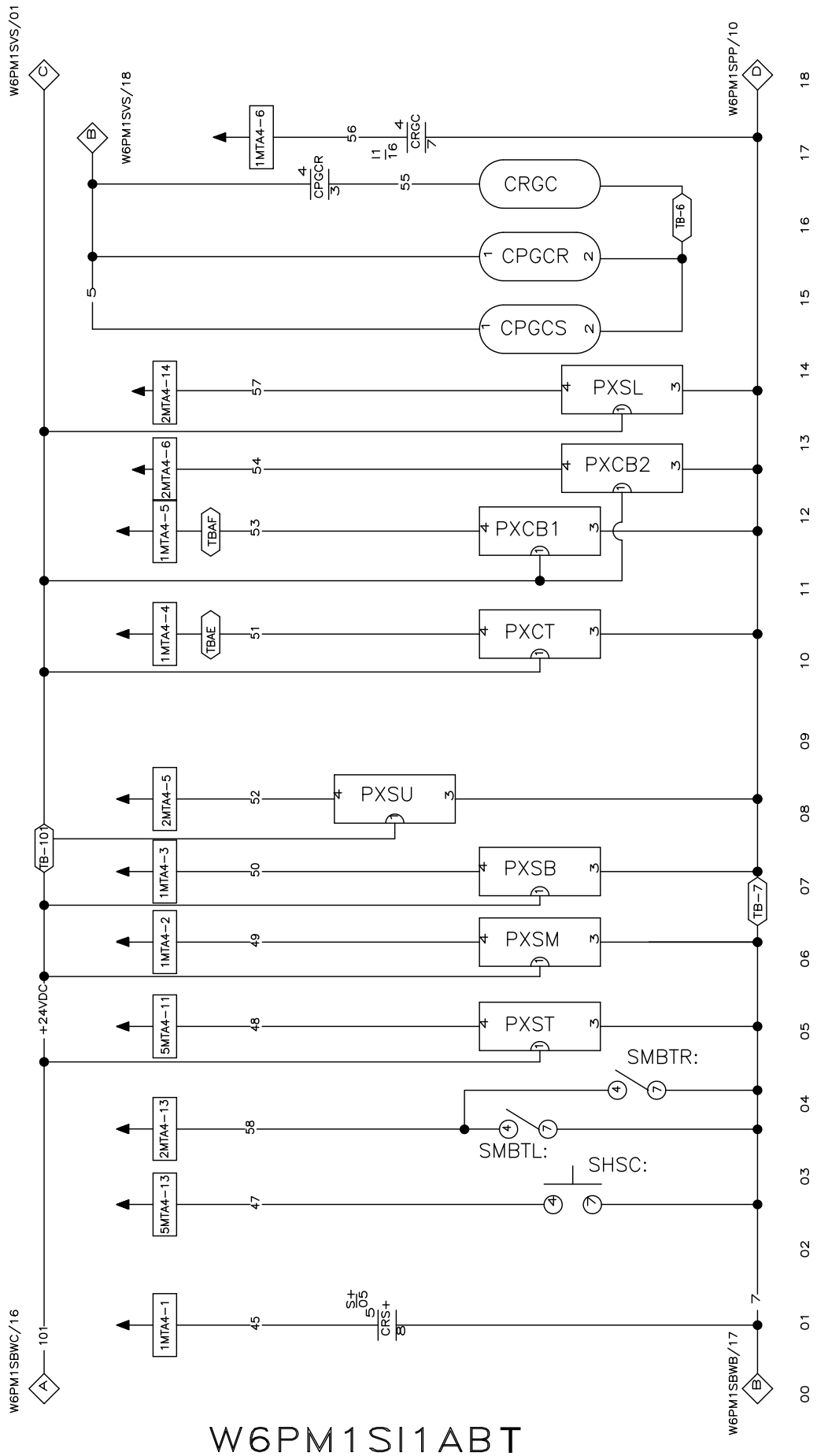

Inputs
Girişler

W6PM1SI1ABT

PELLERIN MILNOR CORPORATION

2018512A

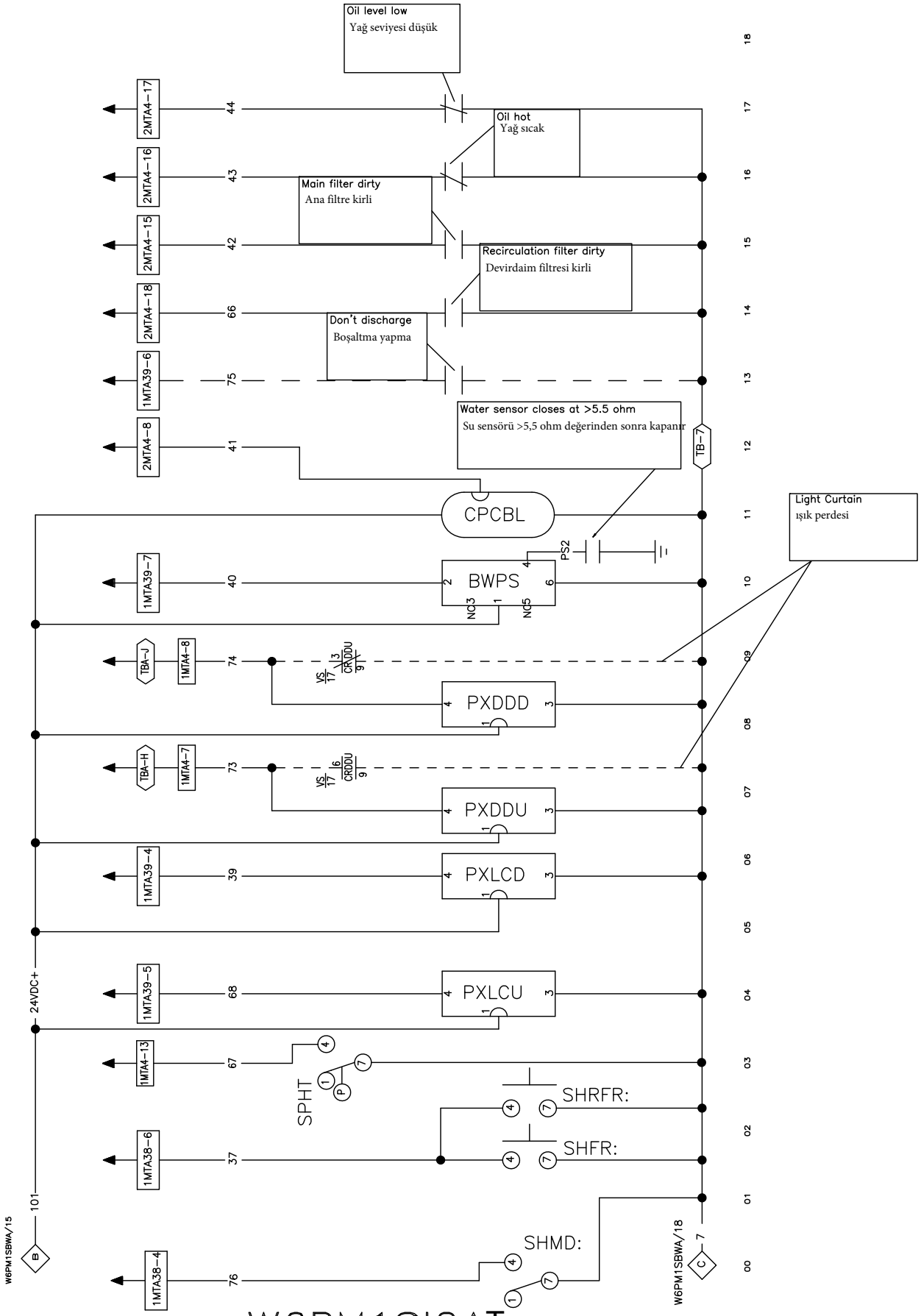

Inputs
Girişler

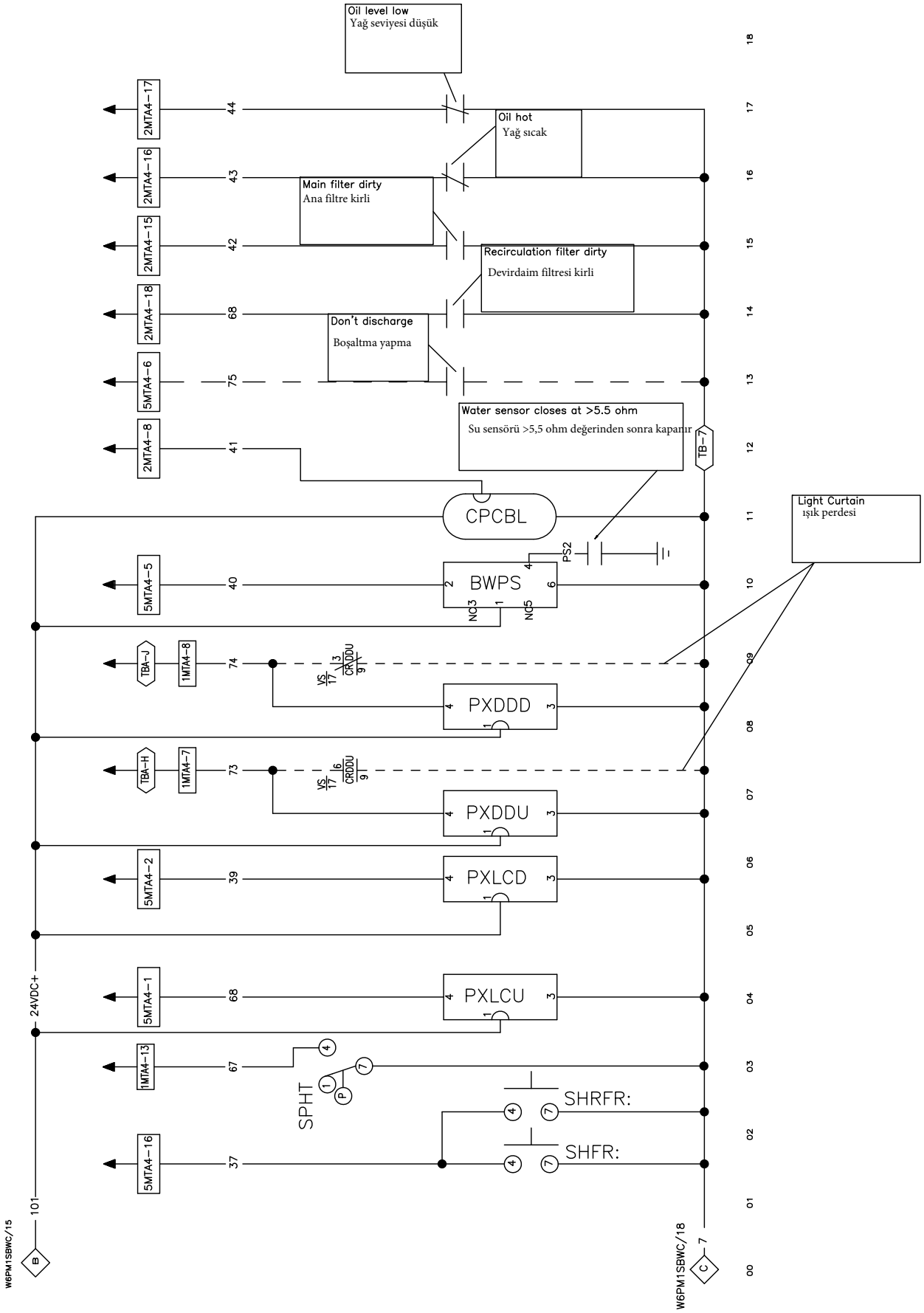

Inputs
Girişler

W6PM1SI2BT

PELLERIN MILNOR CORPORATION

2021053A

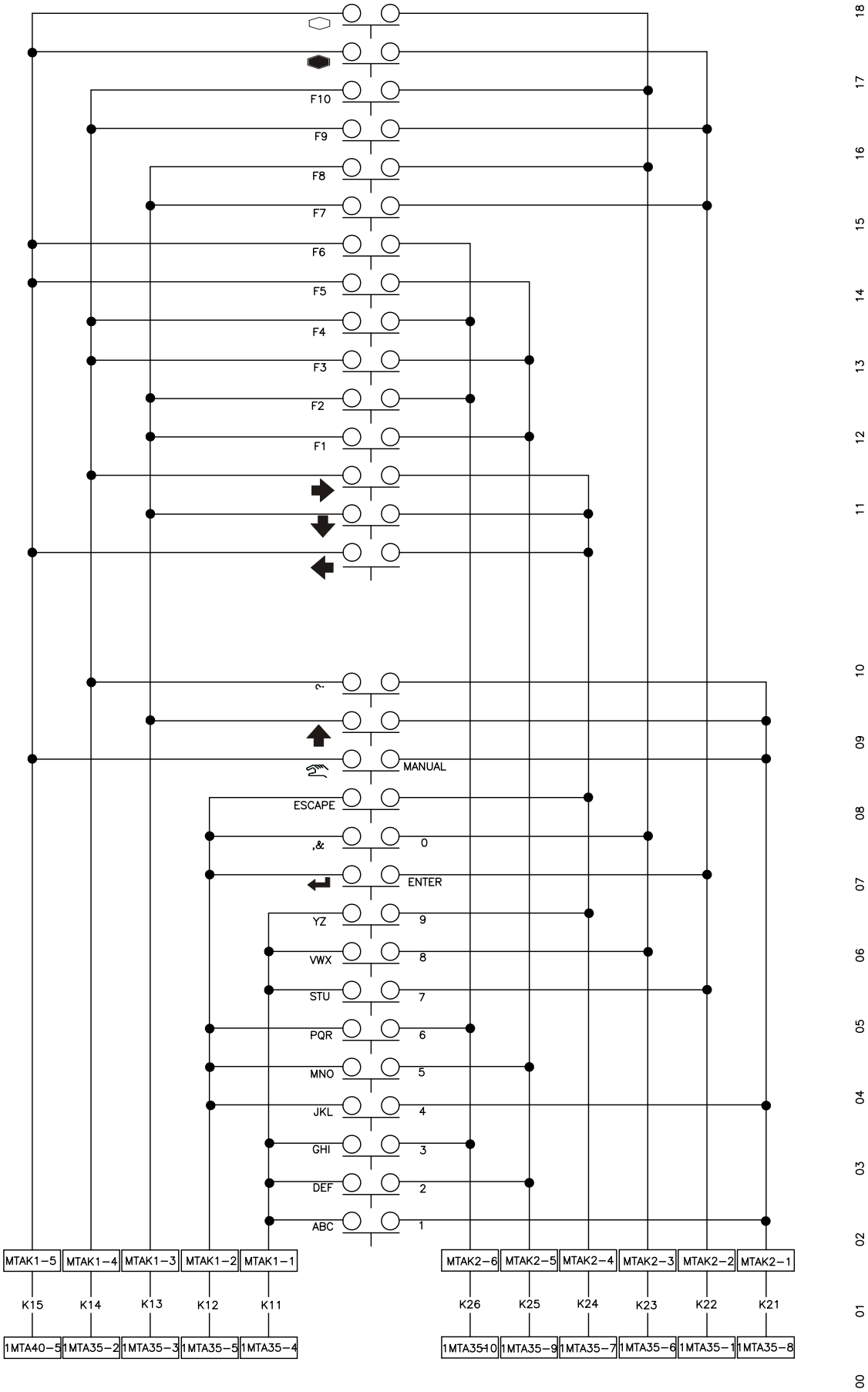

W6PM1SKPAT

PELLERIN MILNOR CORPORATION

Keypad
tuş takımı

2007285A

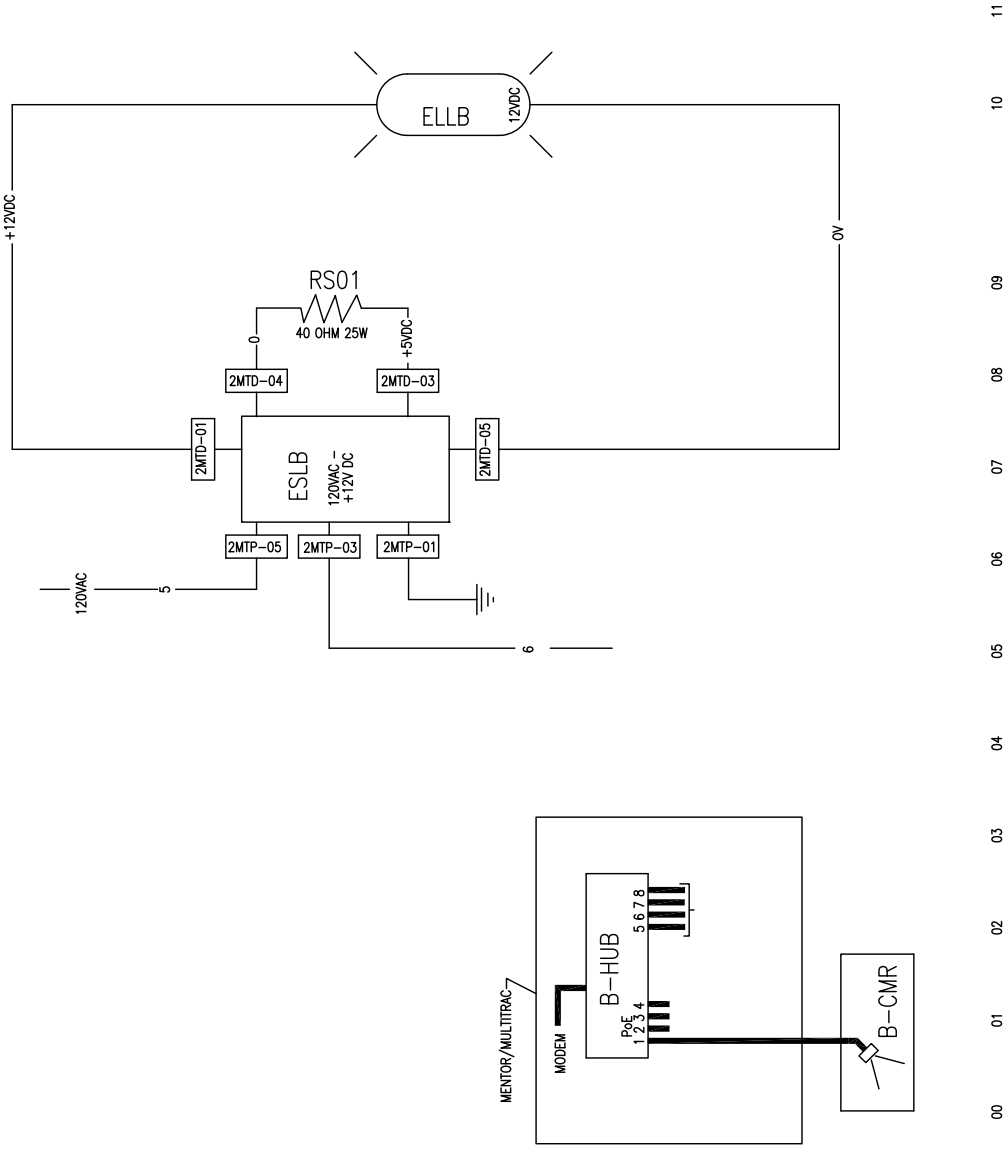

Light
ışık

W6PM1SLBT

PELLERIN MILNOR CORPORATION

2023112A

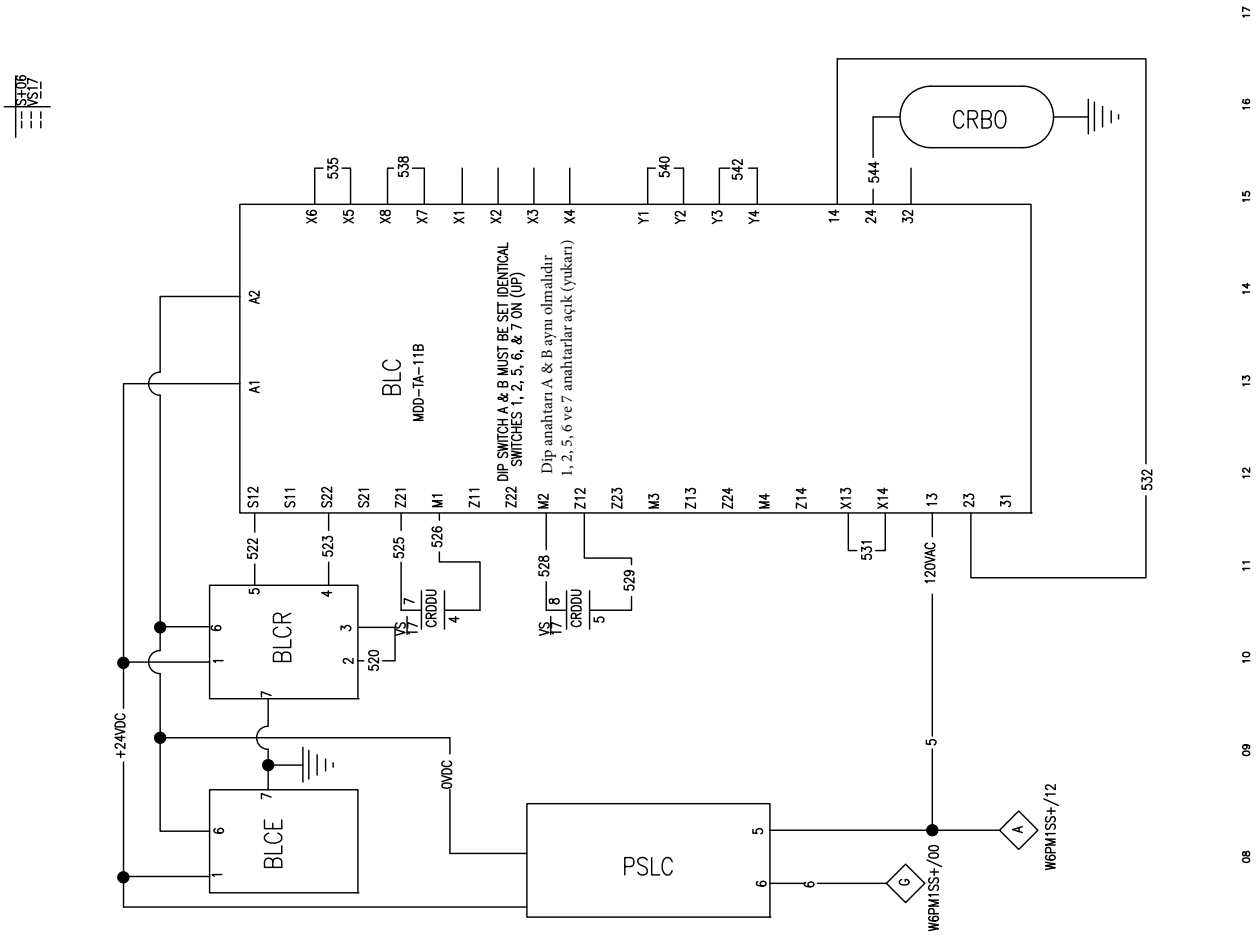

Light Curtain
ışık perdesi

W6PM1SLCT

PELLERIN MILNOR CORPORATION

2021346A

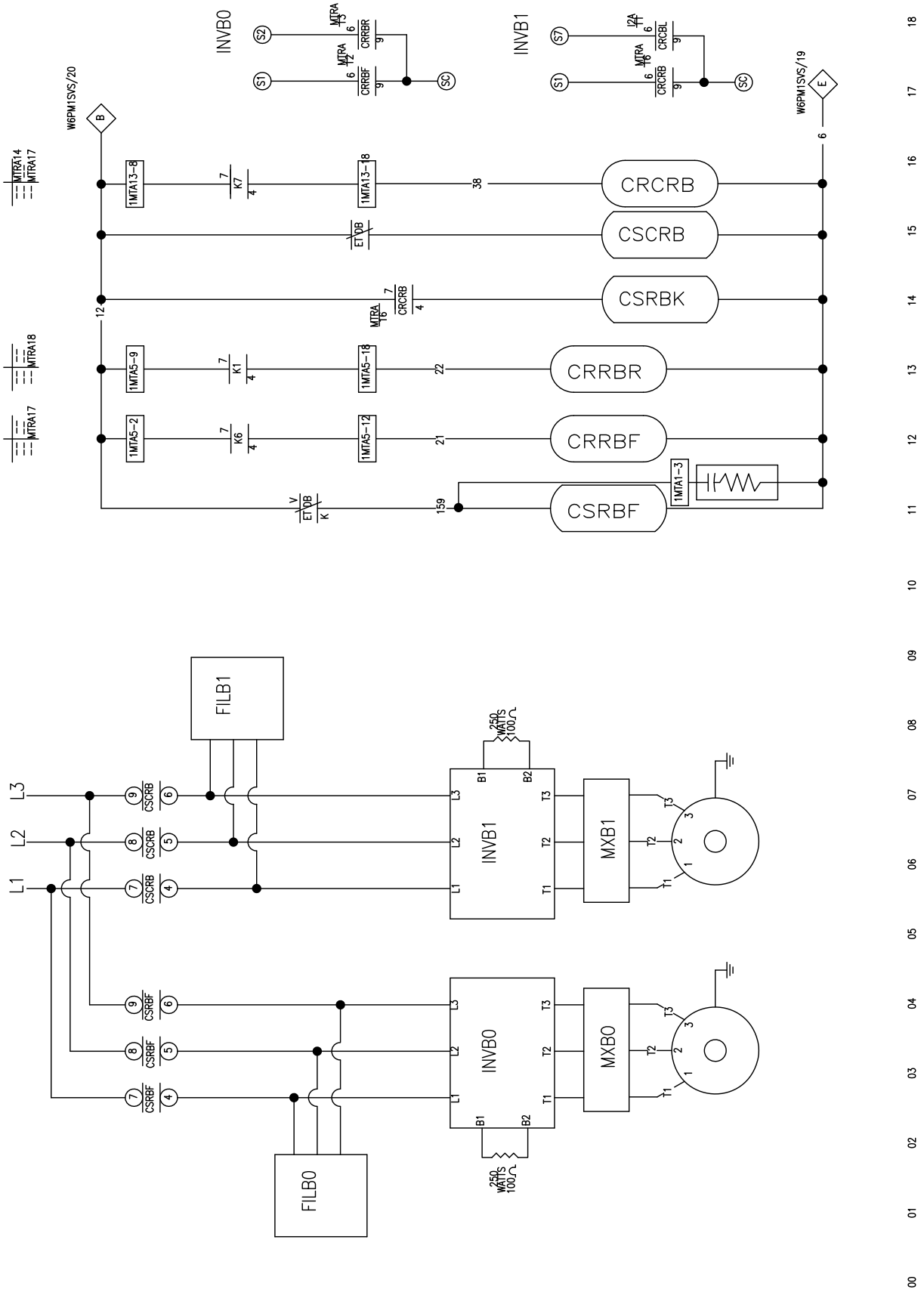

Inverter belt motor wiring
inverter kayışı motor kabloları

W6PM1SMTRAT

PELLERIN MILNOR CORPORATION

2021053A

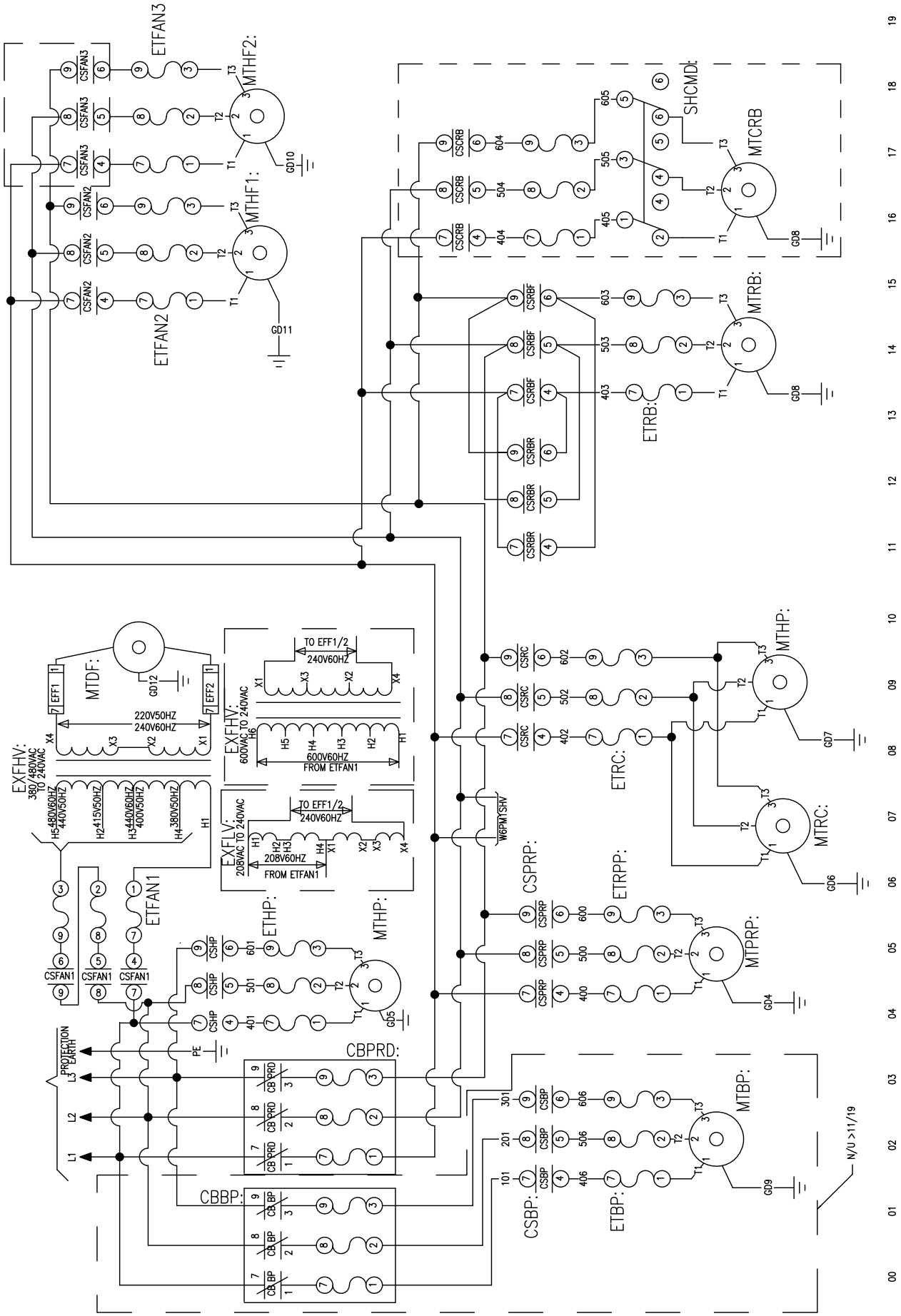

W6PM1SMTRT

PELLERIN MILNOR CORPORATION

2024334A

Motors
Motorlar

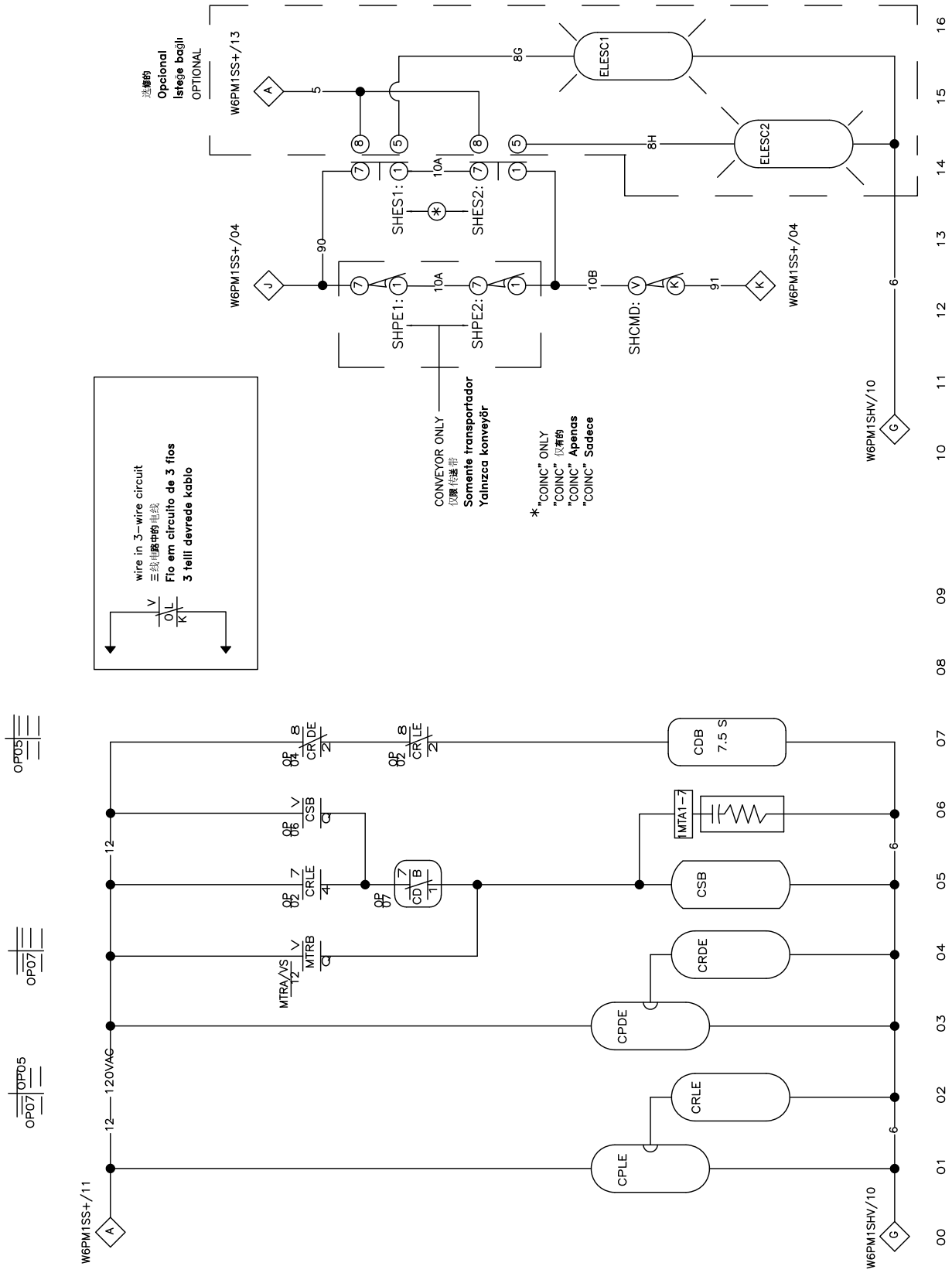

Discharge conveyor
卸料输送机
Transportador de descarga
Boşaltma Konveyörü

W6PM1SOPX

PELLERIN MILNOR CORPORATION

2025154A

COINC Pivoting/Elevating
Coinc 减转/升降
Coinc Pivotante/Elevador
Coinc Pivoting/Yükseltme

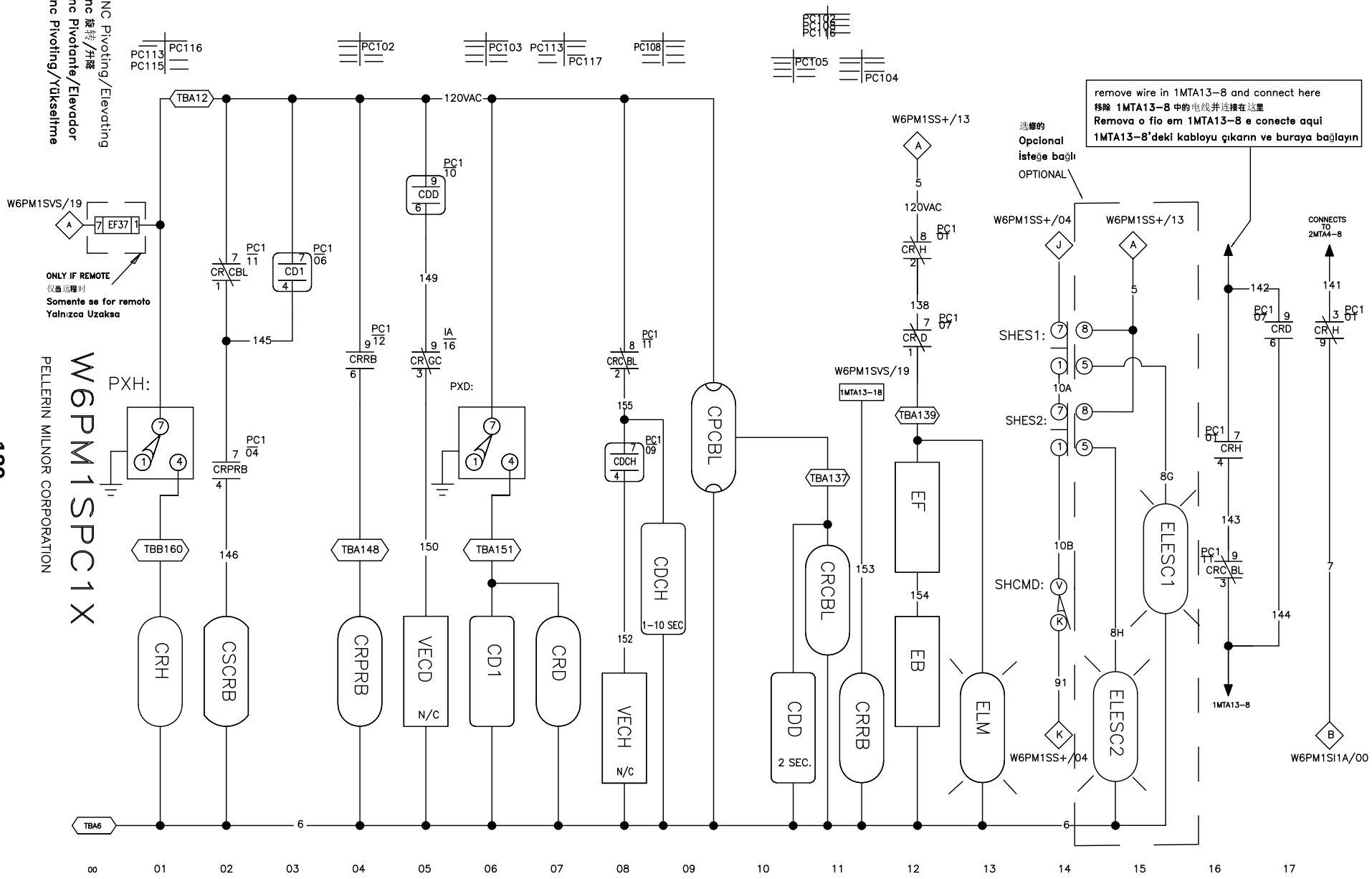

2025154A

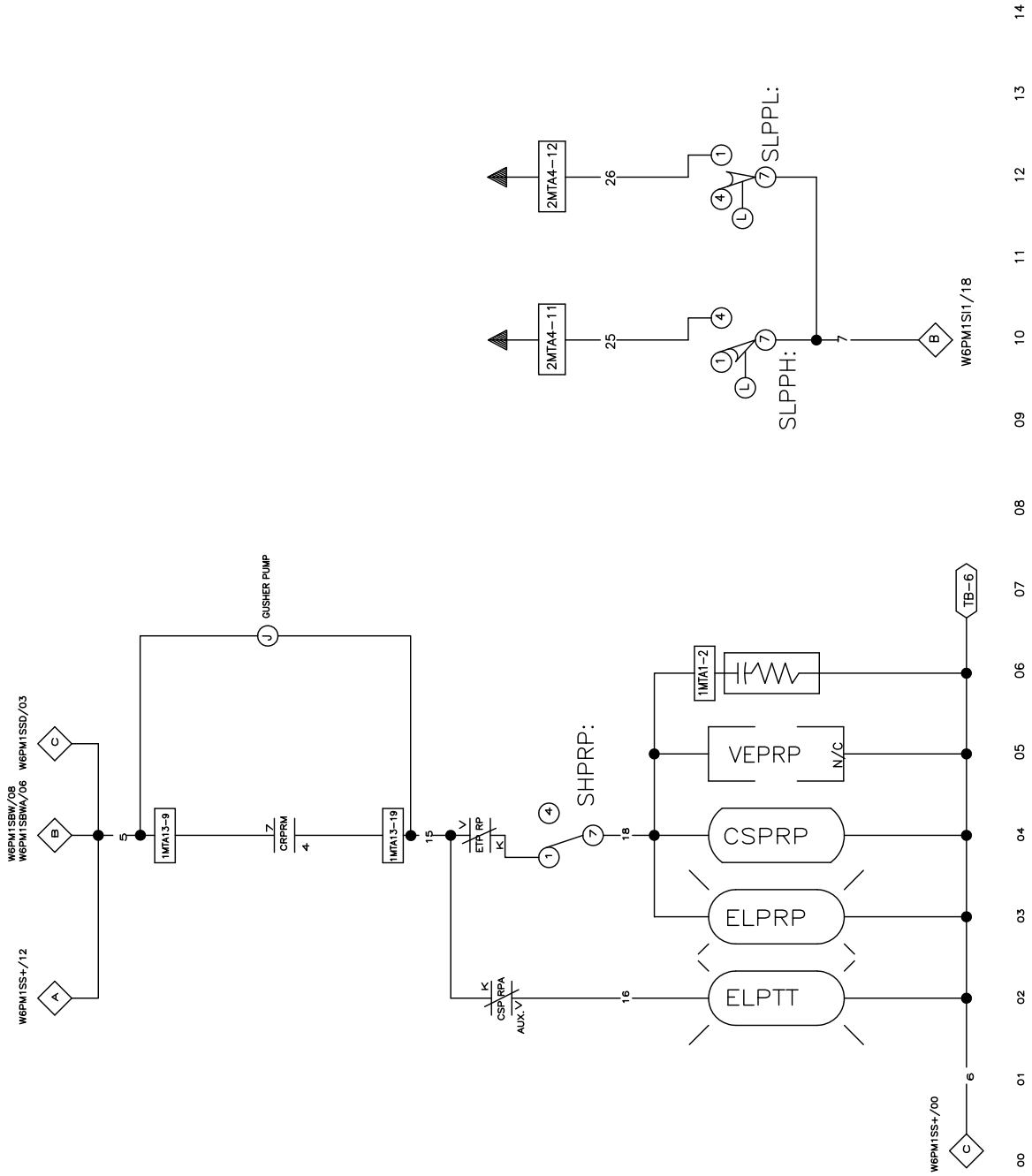

Press Pump
Pompaya bas

W6PM1SPPT

PELLERIN MILNOR CORPORATION

2017245A

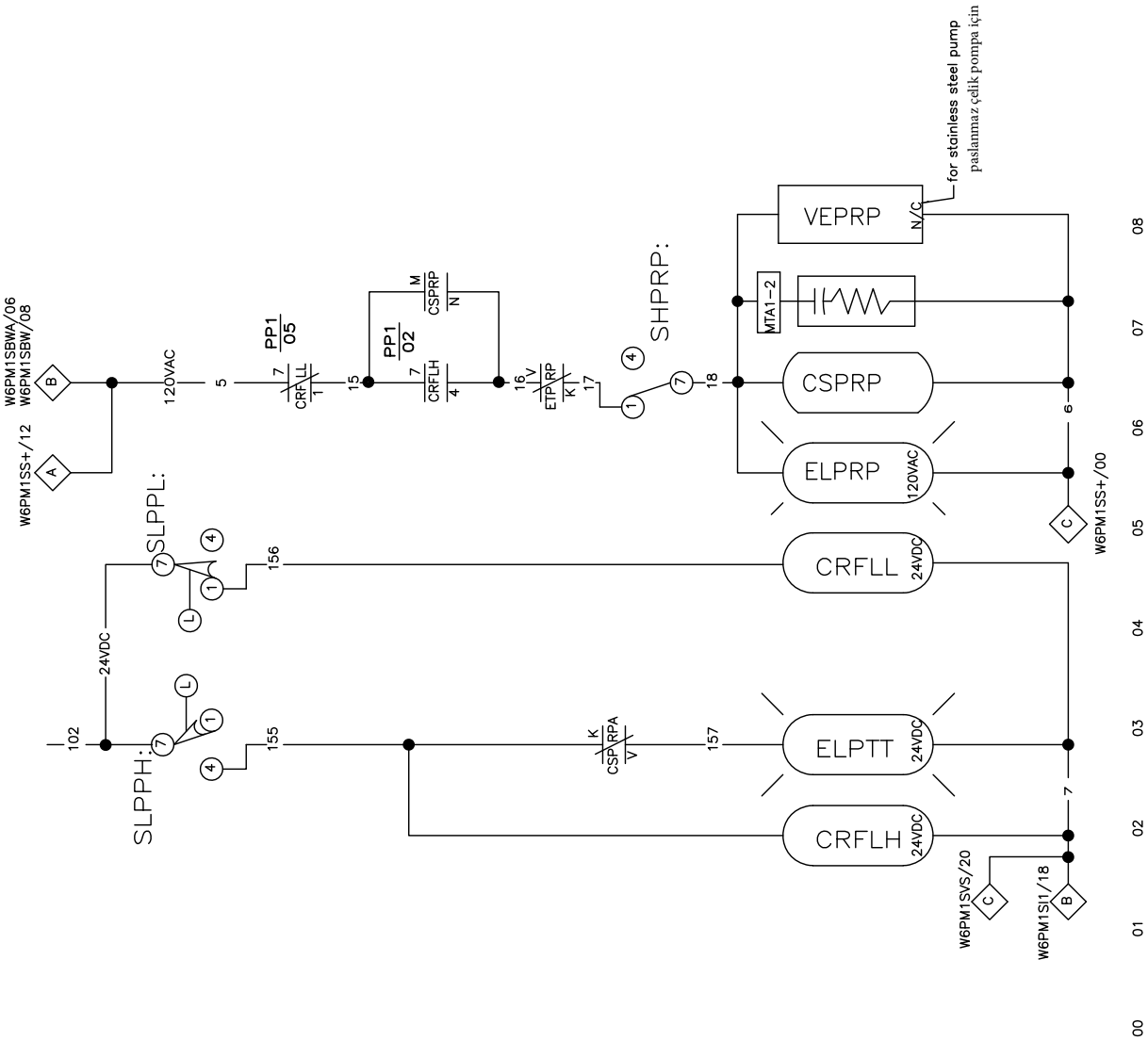

W6PM1SPP1T

Return pump+conductivity probes

Geri besleme pompası ve iletkenlik probu

PELLERIN MILNOR CORPORATION

2024053A

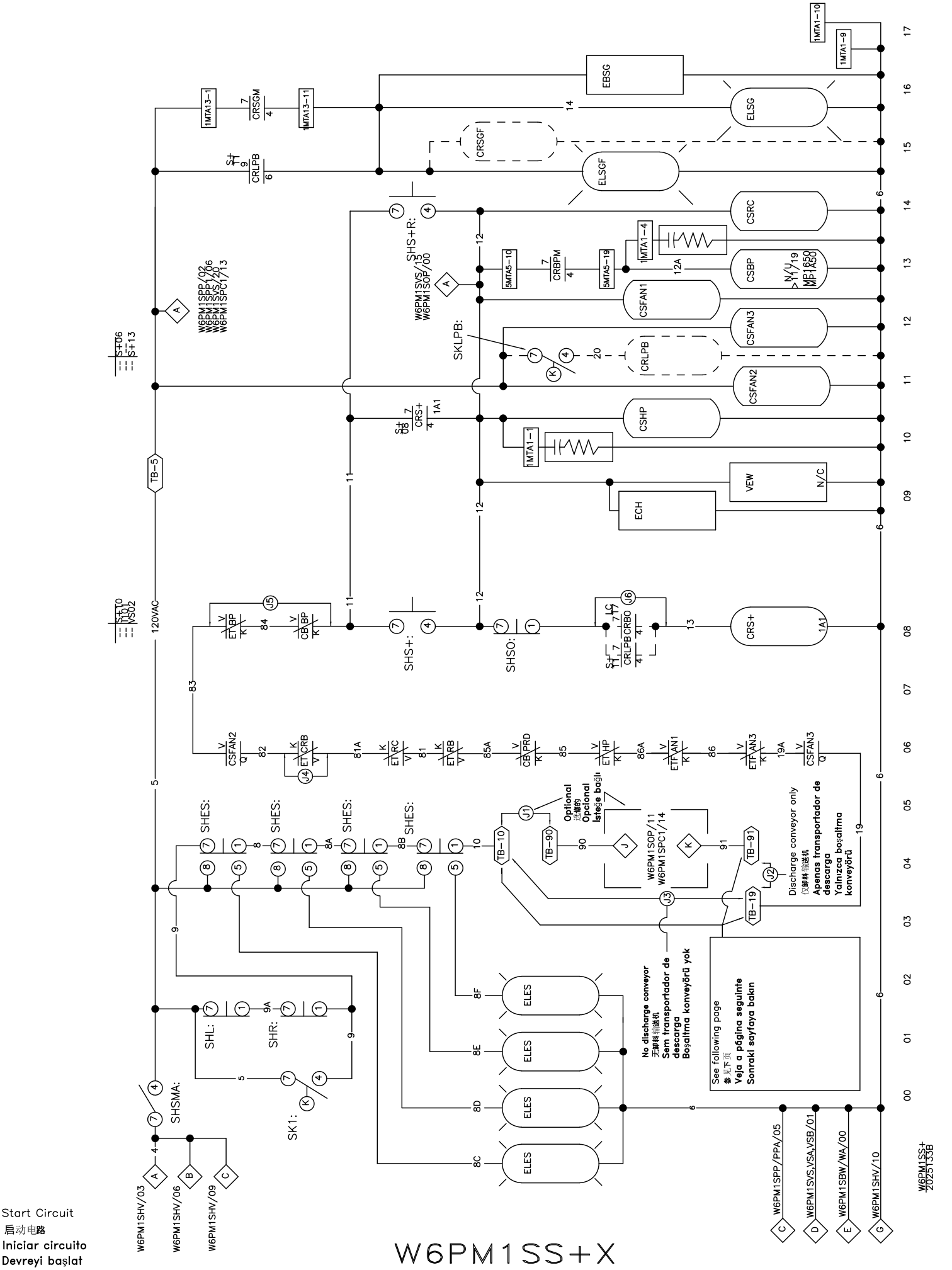

W6PM1SS+X
PELLERIN MI ORPORATION
2025162A
Start Circuit
启动电路
Iniciar circuito
Devreyi başlat
W6PM1SS+
2025133B
W6PM1SHV/03
W6PM1SHV/06
W6PM1SHV/09
W6PM1SHV/10
W6PM1SPP/PPA/05
W6PM1SVS,VSA,VSB/01
W6PM1SBW/WA/00
W6PM1SPP/02
W6PM1SPP/06
W6PM1SVS/20
W6PM1SPC1/13
W6PM1SVS/15
W6PM1SOP/00
W6PM1SOP/11
W6PM1SPC1/14
120VAC
TB-5
TB-10
TB-90
TB-91
TB-19
SHSMA:
SK1:
SHL:
SHR:
SHES:
SHS+:
SHSO:
SHS+R:
SKLPB:
ELES
ELSGF
ELSG
EBSG
CRSGF
CSRC
CSBP
CSFAN1
CSFAN2
CSFAN3
CSHP
CRLPB
CRS+
VEW
ECH
N/C
Optional
选修的
Opcional
İsteğe bağlı
Discharge conveyor only
仅卸料输送机
Apenas transportador de descarga
Yalnızca boşaltma konveyörü
No discharge conveyor
无卸料输送机
Sem transportador de descarga
Boşaltma konveyörü yok
See following page
参见下页
Veja a página seguinte
Sonraki sayfaya bakın

EN----------

Serious bodily injury or death can result to personnel in proximity to machinery/systems that transverse, elevate, extend, pivot, and/or tilt. The following mandatory minimum safety requirements must be installed with this machine:

• Safety fence enclosing machine movement areas

• Lockable electrical interlocks on all gates properly interfaced to the terminals shown here, to disable the machine movement when any gate is opened.

• Signs to alert personnel to these hazards placed prominently around fenced in area.

Local codes may have additional requirements.

TU----------

-Enine hareket eden, yükselen, uzayan, dönen ve/veya eğilen makinenin/sistemlerin yakınında bulunan personelin ciddi derecede bedensel yaralanmasına veya ölümüne neden olabilir. Aşağıdaki zorunlu asgari güvenlik gereksinimleri bu makineyle birlikte kurulmalıdır:

- Makinenin hareket alanlarını çevreleyen emniyet çiti
- Herhangi bir kapı açıldığında makine hareketini devre dışı bırakmak için tüm kapılar üzerinde kilitlenebilir elektrik kilitleri burada gösterilen terminallere düzgün bir şekilde bağlanmıştır.
- Bu tehlikelere karşı personeli uyaran işaretler çevrili alanın etrafına belirgin olacak şekilde yerleştirilmiştir.

Yerel kodlar ek gereksinimlere sahip olabilir.

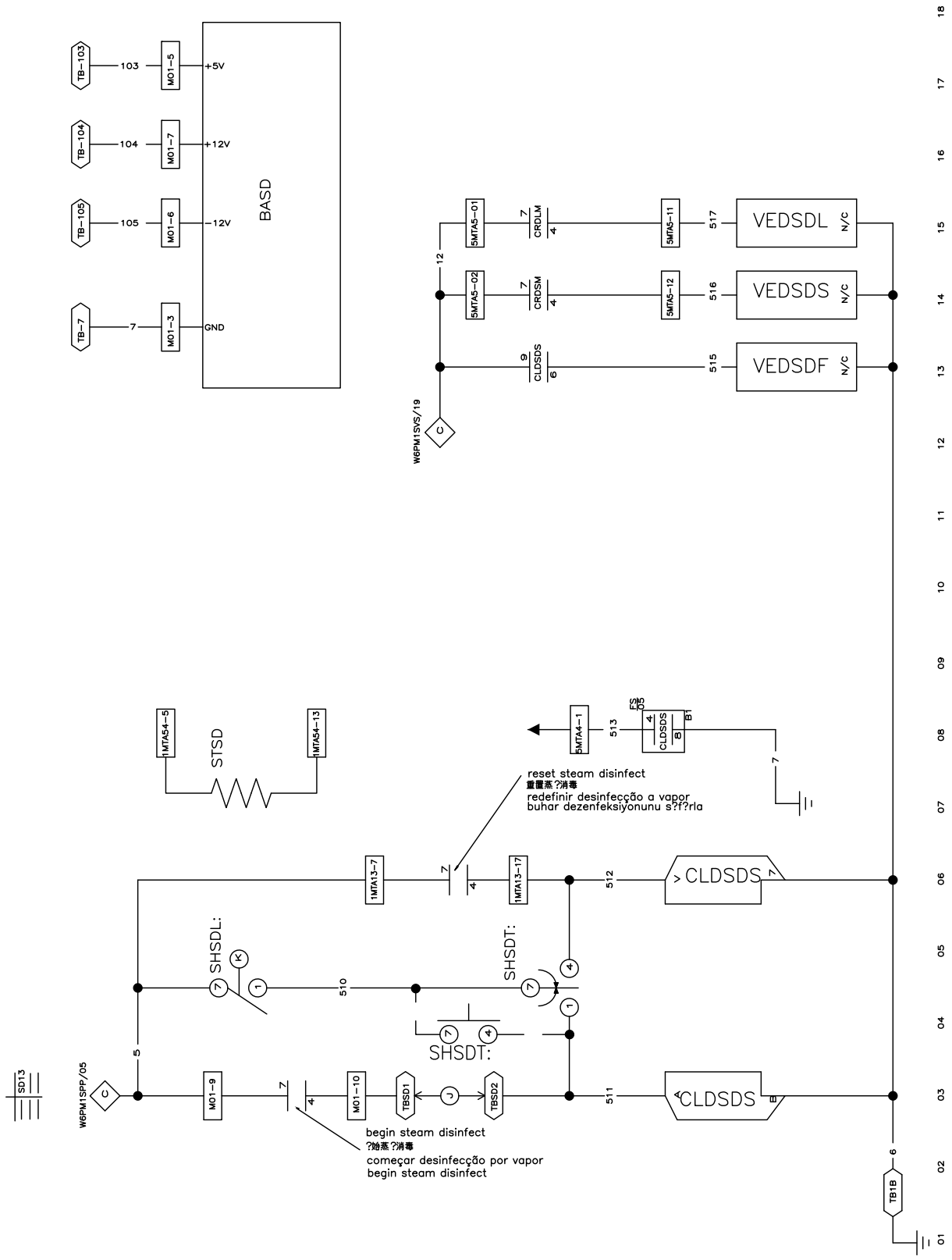

Steam disinfect
蒸?消毒
Desinfecção a vapor
Buhar dezenfeksiyonu

W6PM1SSDX

PELLERIN MILNOR CORPORATION

2025132A

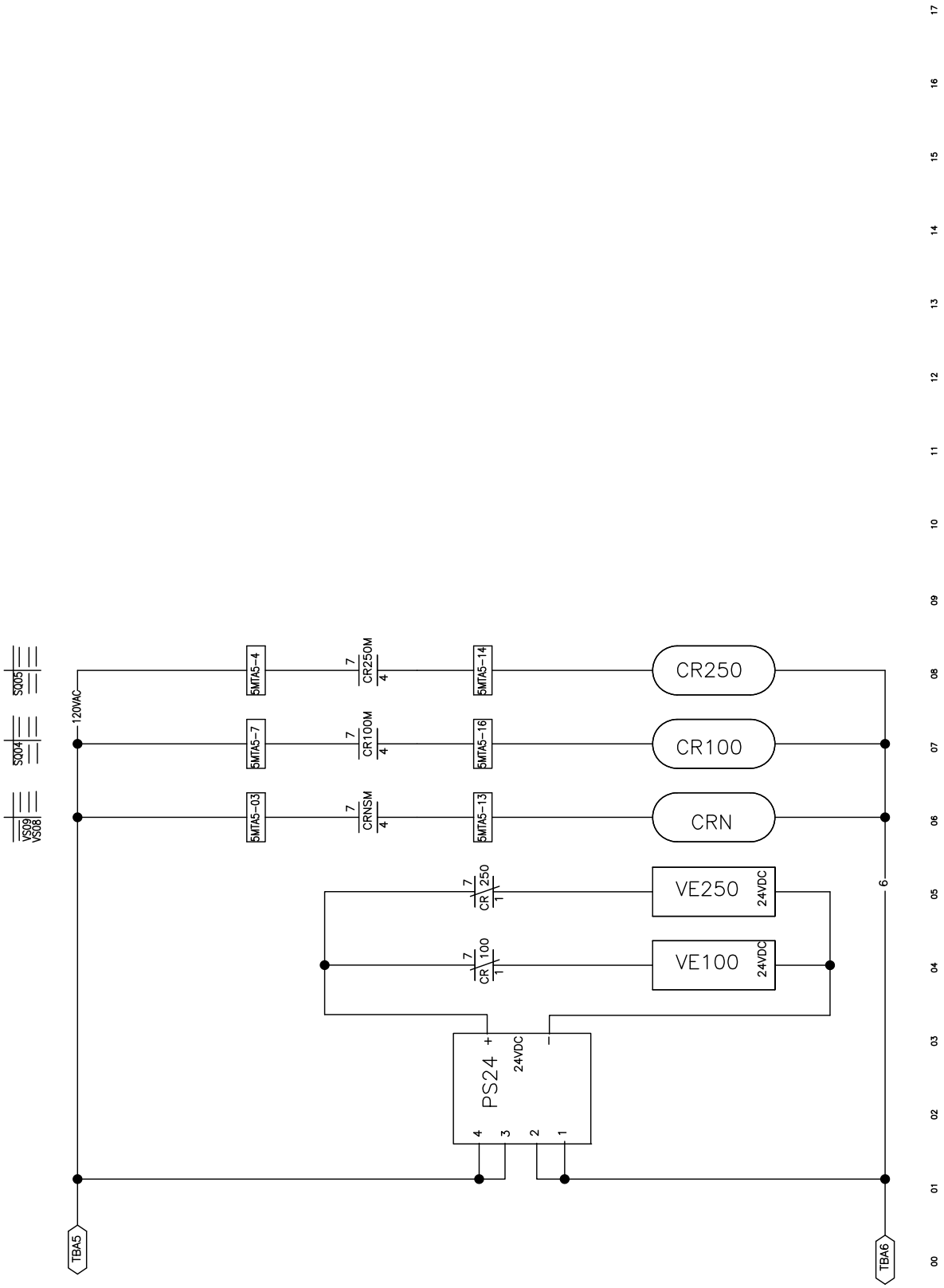

Delicate Care

Özenli Bakım

W6PM1SSQT

PELLERIN MILNOR CORPORATION

2023352A

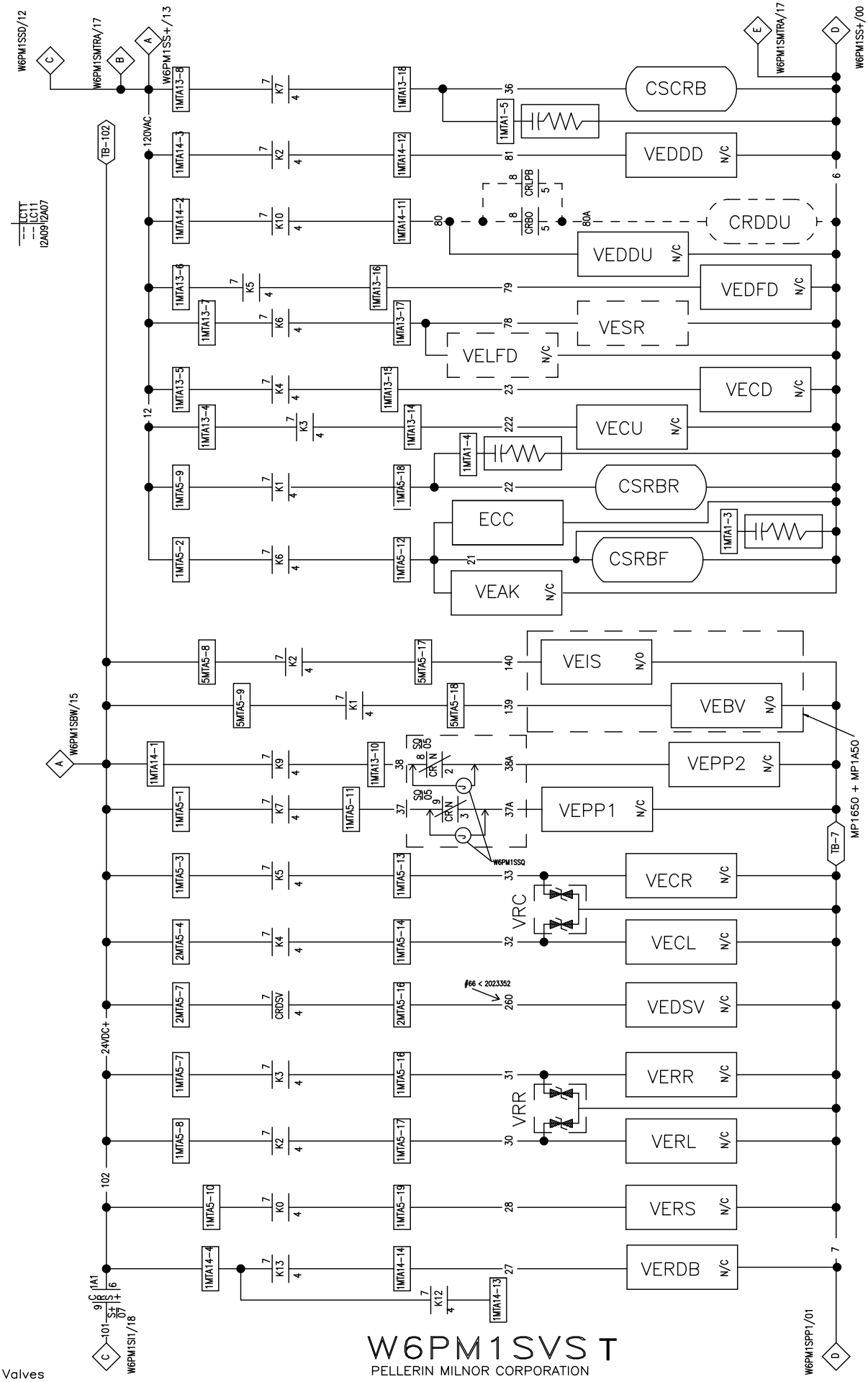

Valves
Vanalar