Published Manual Number/ECN: MC7MWFJ1AX/2025104A

- **Publishing System: TPAS2**
- **Access date: 04/28/2025**
- **Document ECNs: NOT latest**

MWF18/27/45J8, MWF63/77/100J7/C7

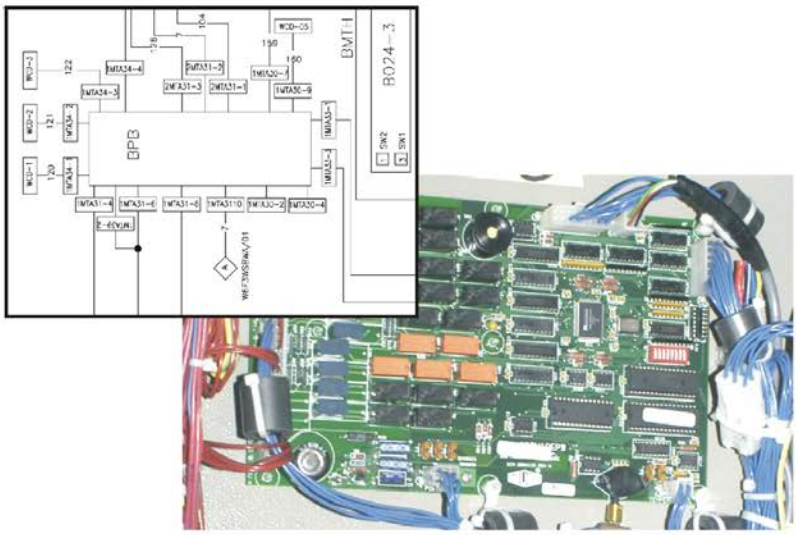

PELLERIN MILNOR CORPORATION POST OFFICE BOX 400, KENNER, LOUISIANA 70063-0400, U.S.A.

MC7MWFJ1AX/25104A

1	**English / 中国的**	
2	Text information / 文本信息	WX2011004CH/2014334A
3	Safety / 安全	WX2011003CH/2014334A
4	Repair parts / 维修配件	WX2011001CH/2014334A
5	Parts List / 零件清单	W7MWFJPLC/2023014N
10	Legend of Symbols / 常用符号表	WX2011002CH/2014334A
16	board wiring / 板接线	W7MWFJBWC/2017314A
17	supplies / 供给	W7MWFJCFC/2017314A
18	supplies / 供给	W7MWFJCMC/2017314A
19	electronic balance / 电子式均布控制	W7MWFJECC/2017314A
20	electric heat / 电加热	W7MWFJEHC/2017314A
21	electric valves / 电磁阀	W7MWFJEVC/2017314A
22	microprocessor inputs / 处理器输入	W7MWFJIAC/2020394A
23	control transfromers / 控制变压器	W7MWFJLVC/2017314A
24	48040F7B tilt circuit / 倾斜电路	W7MWFJRHC/2020394A
25	MWF63C7/77C7/100C7/125C7 tilt circuit / 倾斜电路	W7MWFJRHAC/2020394A
26	MWF27J8 start circuit / 启动电路 / circuito inicial	W7MWFJS+X/2025104A
27	MWF45/63/77/100J8/7 start circuit / 启动电路	W7MWFJS+AC/2017314A
28	MWF63/77/100C7 start circuit / 启动电路	W7MWFJS+BC/2020394A
29	MWF27J8 start circuit no fuse board / 启动电路无保险丝板 / iniciar circuito sem placa de fusíveis	W7MWFJS+CX/2025104A
30	MWF45/63/77/100J7/125J7 start circuit / 启动电路	W7MWFJS+DC/2020394A
31	MWF63/77/100/125C7 start circuit / 启动电路	W7MWFJS+EC/2020394A
32	MW18-77 speed controller / 调速器	W7MWFJVPAC/2021072A
33	MWF27/45/63/77J8/7 1PH speed controller / 调速器	W7MWFJVPBC/2020424A
34	MWF63, 77, 100J7/C7, 125J7/C7 speed controller / 调速器	W7MWFJVPCC/2020424A
35	**English/Português**	
36	Text information / Informações em texto	WX2011004PT/2014484A
37	Safety / Segurança	WX2011003PT/2014484A
38	Repair parts / Peças de manutenção	WX2011001PT/2014484A
39	Parts List / Lista de peças	W7MWFJPLP/2023014N
44	Legend of Symbols / Legenda dos símbolos	WX2011002PT/2014484A
52	board wiring / Fiação da placa	W7MWFJBWP/2017314A
53	supplies / materiais	W7MWFJCFP/2017314A
54	12 chemicals / 12 produtos químicos	W7MWFJCMP/2017314A
55	electronic balance / equilíbrio eletrônico	W7MWFJECP/2017314A
56	electric heat / aquecimento elétrico	W7MWFJEHP/2017314A
57	electric valves / Válvulas elétricas	W7MWFJEVP/2017314A

MC7MWFJ1AX/25104A

58	microprocessor inputs / Entradas de microprocessador	W7MWFJIAP/2020394A
59	control transfromers / transformador de controle	W7MWFJLVP/2017314A
60	48040F7B tilt circuit / circuito de inclinação	W7MWFJRHP/2020394A
61	MWF63C7/77C7/100C7/125C7 tilt circuit / circuito de inclinação	W7MWFJRHAP/2020394A
62	MWF27J8 start circuit / 启动电路 / circuito inicial	W7MWFJS+X/2025104A
63	MWF45/63/77/100J8/7 start circuit / Circuito de partida	W7MWFJS+AP/2017314A
64	MWF63/77/100C7 start circuit / Circuito de partida	W7MWFJS+BP/2020394A
65	MWF27J8 start circuit no fuse board / 启动电路无保险丝板 / iniciar circuito sem placa de fusíveis	W7MWFJS+CX/2025104A
66	MWF45/63/77/100J7/125J7 start circuit / Circuito de partida	W7MWFJS+DP/2020394A
67	MWF63/77/100/125C7 start circuit / Circuito de partida	W7MWFJS+EP/2020394A
68	MWF27/45/63/77 speed controller / controlador de velocidade	W7MWFJVPAP/2021072A
69	MWF27/45/63/77J8/7 1PH speed controller / controlador de velocidade	W7MWFJVPBP/2020424A
70	MWF63, 77, 100J7/C7, 125J7/C7 speed controller / controlador de velocidade	W7MWFJVPCP/2020424A

English / 中国的 1

The text in this Circuit Guide is provided in the following languages:

1. **English**
2. Chinese

這個電路指南中的文字以下語言提供：

1. 英語
2. 中文

Read the separate safety manual before installing, operating, or servicing

阅读单独的安全手册在安装，操作或维修前

How to Get the Necessary Repair Components

You can get components to repair your machine from the approved supplier where you got this machine. Your supplier will usually have the necessary components in stock. You can also get components from the Milnor® factory.

Tell the supplier the machine model and serial number and this data for each necessary component:

- The component number from this manual
- The component name if known
- The necessary quantity
- The necessary transportation requirements
- The schematic number
- If the component is a motor or electrical control, give the nameplate data from the used component.

To write the Milnor factory:

Pellerin Milnor Corporation
Post Office Box 400
Kenner, LA 70063-0400
United States

Telephone: 504-467-2787
Fax: 504-469-9777
Email: parts@milnor.com

如何获取必要的维修组件

您可以从您购买机器的授权供应商处获取组件以维修您的设备。您的供应商通常会在库存中存有必要的组件。您还可以从美国美罗 (Milnor)工厂获取组件。

如需获得某一组件，请告知供应商对应的机器型号、序列号和以下数据：

- 本手册所示的组件编号
- 组件名称，如果已知
- 所需要的数量
- 必要的运输要求
- 电路图编号
- 如果组件是电动机或电气控制元件，请提供原组件的铭牌数据。

美国美罗公司
邮箱 400
肯纳，路易斯安那州 70063-0400
美国

电话： 504-467-2787
传真： 504-469-9777
电子邮件：parts@milnor.com

MC7MWFJ1AX

AC			
ACBA	< 7-2022	W7MWFJEC	EACCLRM3
ACBA	< 7-2022	W7MWFJEC	EACCLRM8
BA			
ACBA		W7MWFJEC	EACCLRM3
BADV		W7MWFJBW	98CMCR1823
BAFR		W7MWFJS+	08BHFRCT
BAFR		W7MWFJS+A	08BHFRCT
BAFR		W7MWFJS+B	08BHFRCT
BAUP		W7MWFJBW	98CMCR1822
BBAD-1		W7MWFJEC	98CMCR1822
CL			
CLA		W7MWFJS+A	09CL2C-C71
CLA		W7MWFJS+B	09CL2C-C71
CLA		W7MWFJS+D	09CL2C-C71
CLA		W7MWFJS+E	09CL2C-C71
CLA-CHOKE		W7MWFJS+B	10YCLCHOKE
CLA-CHOKE		W7MWFJS+A	10YCLCHOKE
CLA-CHOKE		W7MWFJS+D	10YCLCHOKE
CLA-CHOKE		W7MWFJS+E	10YCLCHOKE
CR			
CRALT		W7MWFJEC	09C024D71
CRC1		W7MWFJCM	09C024D71
CRC2		W7MWFJCM	09C024D71
CRC3		W7MWFJCM	09C024D71
CRC4		W7MWFJCM	09C024D71
CRC5		W7MWFJCM	09C024D71
CRC6		W7MWFJCM	09C024D71
CRD		W7MWFJS+	09C024D71
CRD		W7MWFJS+B	09C024D71
CRD		W7MWFJS+A	09C024D71
CRD		W7MWFJS+C	09C024D71
CRD		W7MWFJS+D	09C024D71
CRD		W7MWFJS+E	09C024D71
CRDB		W7MWFJS+B	09C024D71
CRDB		W7MWFJS+E	09C024D71
CRDL		W7MWFJS+	09C024D71
CRDL		W7MWFJS+B	09C024D71
CRDL		W7MWFJS+A	09C024D71
CRDL		W7MWFJS+C	09C024D71
CRDL		W7MWFJS+D	09C024D71
CRDL		W7MWFJS+E	09C024D71
CRDOA		W7X8ZRHA	09C024D71
CRDOA		W7MWFJRH	09C024D71
CRE		W7MWFJS+	09C024D71
CRE		W7MWFJS+C	09C024D71
CRE1		W7MWFJS+B	09C024D71
CRE1		W7MWFJS+D	09C024D71
CRE1		W7MWFJS+E	09C024D71
CRFDL		W7MWFJRH	09C024D71

CRFDR		W7MWFJRH	09C024D71
CRRDL		W7X8ZRHA	09C024D71
CRRDL		W7MWFJRH	09C024D71
CRRDR		W7X8ZRHA	09C024D71
CRRDR		W7MWFJRH	09C024D71
CS			
CSVS	MWF27J7	W7MWFJS+	98CMCR3004
CSVS	MWF45J7	W7MWFJS+A	98CMCR3601
CSVS	MWF63,77J7<250V	W7MWFJS+A	98CMCR4201
CSVS	MWF63,77J7>250V	W7MWFJS+A	98CMCR4202
CSVS	MWF63,77J/C7<250V	W7MWFJS+B	98CMCR4201
CSVS	MWF63,77J/C7>250V	W7MWFJS+B	98CMCR4202
CSVS		W7MWFJVPB	09MC08C371
CSVS	MWF100J7>250V	W7MWFJVPC	09MC08G371
CSVS	MWF100J7<250V	W7MWFJVPC	09MC08N371
CSVS		W7MWFJS+C	98CMCR3004
CSVS		W7MWFJS+D	98CMCR3601
CSVS		W7MWFJS+D	98CMCR4201
CSVS		W7MWFJS+D	98CMCR4202
CSVS		W7MWFJS+E	98CMCR4201
CSVS		W7MWFJS+E	98CMCR4202
EF			
EF1		W7MWFJS+	09FF002AMG
EF1		W7MWFJS+C	09FF002AMG
EF2		W7MWFJS+	09FF002AMG
EF2		W7MWFJS+B	09FF002AMG
EF2		W7MWFJS+B	09FF002AMG
EF2		W7MWFJS+A	09FF002AMG
EF2		W7MWFJS+A	09FF002AMG
EF2		W7MWFJS+C	09FF002AMG
EF2		W7MWFJS+D	09FF002AMG
EF2		W7MWFJS+D	09FF002AMG
EF2		W7MWFJS+E	09FF002AMG
EF2		W7MWFJS+E	09FF002AMG
EFP1		W7MWFJLV	09FF005AWN
EFP2		W7MWFJLV	09FF005AWN
EM			
EMDL		W7MWFJS+	09K063C24
EMDL		W7MWFJS+C	09K063C24
ES			
ESPS		W7MWFJBW	98CMCR3003
ET			
ETVS	MWF100J7 >250V	W7MWFJVPC	09FTD0121T
ETVS	MWF100J7 <250V	W7MWFJVPC	09FTD0230T
ETVS	MWF27J7	W7MWFJVPA	09FTD0120T
ETVS	MWF27J7 <250V	W7MWFJVPA	98CMCR3005
ETVS	MWF27J7 >250V	W7MWFJVPA	98CMCR3006
ETVS	MWF45J7 <250V	W7MWFJVPA	98CMCR3602
ETVS	MWF45J7 >250V	W7MWFJVPA	98CMCR3603
ETVS	MWF63,77J7 <250V	W7MWFJVPA	98CMCR4203

ETVS	MWF63,77J7 >250V	W7MWFJVPA	98CMCR4204
ETVS	MWF27J7 1PH	W7MWFJVPB	09FTD0120T
EX			
EXHV-1	208/240VAC	W7MWFJLV	98CMCR0902
EXHV-2	380-480VAV	W7MWFJLV	09UA025AAB
EXHV-3	600VAC	W7MWFJLV	09U251AB71
MT			
MTVP		W7MWFJS+A	13AF100A71
MTVP		W7MWFJS+D	13AF100A71
MTVP		W7MWFJS+E	13AF100A71
MTWE		W7MWFJVPA	MESSAGE SO
MTWE		W7MWFJVPB	MESSAGE SO
MTWE		W7MWFJVPC	MESSAGE SO
MV			
MVDBR	MWF27J7	W7MWFJVPA	09MV100RES
MVDBR	MWF45J7	W7MWFJVPA	09MV050REV
MVDBR	MWF63,77J7	W7MWFJVPA	09MV010REV
MVDBR	MWF27J7 1PH	W7MWFJVPB	09MV100RES
MVDBR	MWF100J7 <250V	W7MWFJVPC	09MV11DBRL
MVDBR	MWF100J7 >250V	W7MWFJVPC	09MV10DBRJ
MVINV-H	MWF27J7 >250V	W7MWFJVPA	09MWB00996
MVINV-H	MWF45J7 >250V	W7MWFJVPA	09MWB01896
MVINV-H	MWF63J7 >250V	W7MWFJVPA	09MWB02496
MVINV-H	MWF77J7 >250V	W7MWFJVPA	09MWB02496
MVINV-H	MWF100J7 >250V	W7MWFJVPB	09MWC03996
MVINV-L	MWF27J7 <250V	W7MWFJVPA	09MWB01774
MVINV-L	MWF45J7 <250V	W7MWFJVPA	09MWB03374
MVINV-L	MWF63J7 <250V	W7MWFJVPA	09MWB04774
MVINV-L	MWF77J7 <250V	W7MWFJVPA	09MWB04774
MVINV-L	MWF100J7 <250V	W7MWFJVPB	09MWC07574
PX			
PXDO		W7X8ZRHA	09RPS18CAS
PXDO		W7MWFJRH	09RPS18CAS
PXFDL		W7X8ZRHA	09RPS12AAS
PXFDL		W7MWFJRH	09RPS12AAS
PXFDR		W7MWFJRH	09RPS12AAS
PXRDL		W7MWFJRH	09RPS12AAS
PXRDR		W7X8ZRHA	09RPS12AAS
PXRDR		W7MWFJRH	09RPS12AAS
SH			
SH01		W7MWFJLV	08BHFRCT
SHCW		W7MWFJVPC	09N405M320
SHDO		W7MWFJIA	09N405PB10
SHDO		W7MWFJS+	09N405PB10
SHDO		W7MWFJS+B	09N405PB10
SHDO		W7MWFJS+A	09N405PB10
SHDO		W7MWFJS+C	09N405PB10
SHDO		W7MWFJS+D	09N405PB10
SHDO		W7MWFJS+E	09N405PB10
SHES		W7MWFJS+	09N508A

SHES		W7MWFJS+B	09N508A
SHES		W7MWFJS+A	09N508A
SHES		W7MWFJS+C	09N508A
SHES		W7MWFJS+D	09N508A
SHES		W7MWFJS+E	09N508A
SHMF		W7MWFJEV	09N405PB10
SHSMA		W7MWFJS+	09N405M220
SHSMA		W7MWFJS+B	09N405M220
SHSMA		W7MWFJS+A	09N405M220
SHSMA		W7MWFJS+C	09N405M220
SHSMA		W7MWFJS+D	09N405M220
SHSMA		W7MWFJS+E	09N405M220
SHU		W7X8ZRHA	09N405S320
SHU		W7MWFJRH	09N405S320
SHWCF		W7MWFJCF	09N405PB10
SK			
SKPR		W7MWFJIA	09N127C
SM			
SMD		W7MWFJS+	09R010D
SMD		W7MWFJS+B	09R014A
SMD		W7MWFJS+A	09R014A
SMD		W7MWFJS+C	09R010D
SMD		W7MWFJS+D	09R014A
SMD		W7MWFJS+E	09R014A
SMDE		W7MWFJS+B	09R012
SMDE		W7MWFJS+A	09R012
SMDE		W7MWFJS+D	09R012
SMDE		W7MWFJS+E	09R012
SME		W7MWFJS+	09R010D
SME		W7MWFJS+C	09R010D
SMEX		W7MWFJIA	09R008ASTD
SMWVB		W7MWFJIA	SAE03 151
SP			
SPA		W7MWFJS+B	09N082A
SPA		W7MWFJS+A	09N082A
SPA		W7MWFJS+D	09N082A
SPA		W7MWFJS+E	09N082A
SPBP		W7MWFJIA	09N082B05
SPBS		W7MWFJIA	09N082A
SPD		W7MWFJS+B	09N082B10
SPD		W7MWFJS+A	09N082B10
SPD		W7MWFJS+D	09N082B10
SPD		W7MWFJS+E	09N082B10
ST			
STDB		W7MWFJS+	30RA175T
STDB		W7MWFJS+A	30RA175T
STDB		W7MWFJS+C	30RA175T
STDB		W7MWFJS+D	30RA175T
STDB		W7MWFJS+E	30RA175T
VE			

VEBP		W7MWFJS+A	96TBC2BA71
VEBP		W7MWFJS+B	96TBC2BA71
VEBR		W7MWFJS+A	96R301B71
VEBR		W7MWFJS+B	96R301B71
VEC01		W7MWFJCF	96P013B71
VEC02		W7MWFJCF	96P013B71
VEC03		W7MWFJCF	96P013B71
VEC04		W7MWFJCF	96P013B71
VEC05		W7MWFJCF	96P013B71
VECD	MWF45CHEMICAL #4 <250C	W7MWFJEV	96P057A71
VECD	MWF45CHEMICAL #5 <250C	W7MWFJEV	96P056A71
VECD	MWF45<250C	W7MWFJEV	96P152A71
VECD	MWF45<250C	W7MWFJEV	96R301B71
VED	MWF63/77/100C7	W7X8ZRHA	96R301B71
VED		W7MWFJRH	96R301B71
VEDL	MWF45<250C	W7MWFJS+B	98CMCR3001
VEDL	MWF45<250C	W7MWFJS+A	98CMCR3001
VEDL		W7MWFJS+D	98CMCR3001
VEDL		W7MWFJS+E	98CMCR3001
VEDR	208/240VAC	W7MWFJEV	96D350A71
VEDR	MWF45<250D	W7MWFJEV	96R301B71
VEDRR	MWF45<250D	W7MWFJEV	96D350B71
VEDRR	MWF45<250D	W7MWFJEV	96R301B71
VEF		W7MWFJRH	96R301B71
VEFL	MWF45<250D	W7MWFJEV	96P057A71
VEFL	MWF45<250D	W7MWFJEV	96P056A71
VEFLS	MWF45MWF27<250M	W7MWFJEV	96P013G71
VEPPO	MWF45MWF45,63,77<250M	W7MWFJS+A	98CMCR3002
VEPPO	MWF45MWF45,63,77<250M	W7MWFJS+B	98CMCR3002
VEPPO		W7MWFJS+D	98CMCR3002
VEPPO		W7MWFJS+E	98CMCR3002
VER		W7MWFJRH	96R301B71
VESTM	MWF45FLUSH <250F	W7MWFJEV	98CMCR3001
VESTM	MWF45<250D	W7MWFJEV	96R301B71
VEU	MWF63/77/100C7	W7X8ZRHA	96R301B71
VEU		W7MWFJRH	96R301B71
VEWC	MWF45MWF45,63,77<250M	W7MWFJEV	96P057A71
VEWC	MWF45<250S	W7MWFJEV	98CMCR3001
VEWC	MWF45<250C	W7MWFJEV	98CMCR3001
VEWC	MWF45<250C	W7MWFJEV	96R301B71
VEWC	MWF45<250C	W7MWFJEV	98CMCR3001
VEWC	MWF45<250C	W7MWFJEV	98CMCR3001
VEWH	MWF45<250H	W7MWFJEV	96P057A71
VEWH	MWF45<250H	W7MWFJEV	96R301B71
VEWVX	MWF45<250H	W7MWFJEV	96P057A71
VEWVX	MWF45<250H	W7MWFJEV	96P056A71
VEWVX	MWF45<250E	W7MWFJEV	96P152A71
VEWVX	MWF45<250E	W7MWFJEV	96R301B71

Legend of Symbols 常用符号表

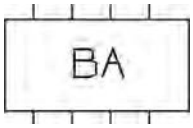

BA = Printed Circuit Board
印刷电路板

CB = Circuit Breaker
断路器

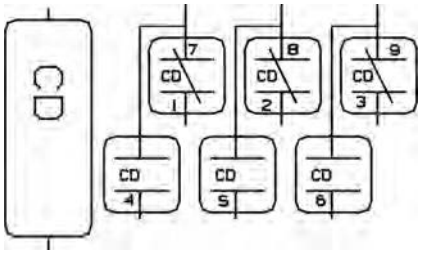

CD = Time Delay Relay
延时继电器

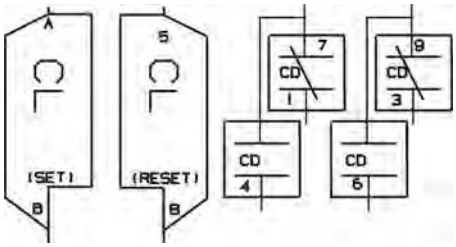

CL = Latch Relay
锁存继电器

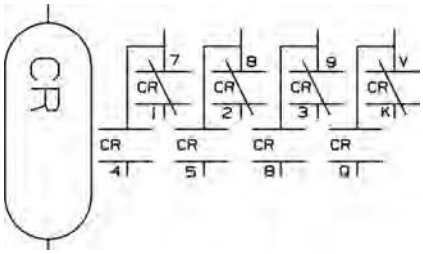

CR = Relay
继电器

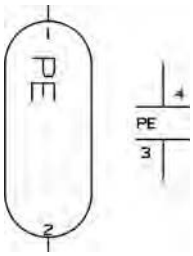

CP = Photo-Eye
光眼

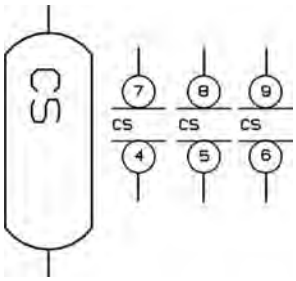

CS = Contactor/Motor Starter
接触器/电动机起动器

EB = Audible Signal
声音信号

EC = Clutch
离合器

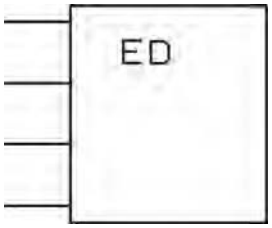

ED = Electronic Display
电子显示**屏**

EF = Fuse
保险丝

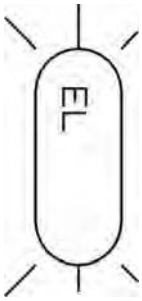

EL = Light
灯

EM = Electro Magnatic Solenoid
电磁线圈

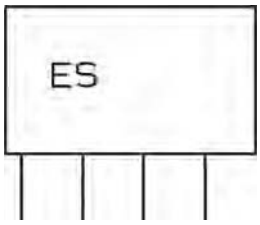

ES = Electronic Power Supply
电子电源

ET = Thermal Overload
热过载

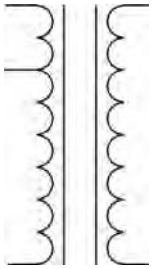

EX = Transformer
变压器

KB = Keyboard/Keypad
键盘/键盘

MN = Electronic Monitor
电子显示监控器

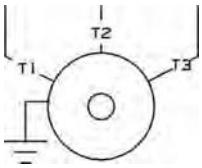

MR = Motor
马达

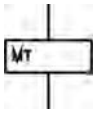

MT = Board Connector
板连接器

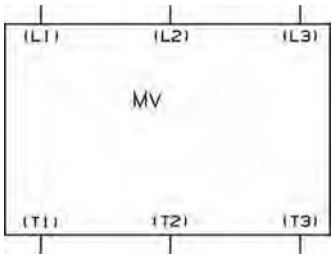

MV = Motor Inverter
电机变频器逆变器

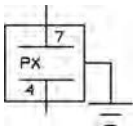

PX = Proximity Switch
接近开关

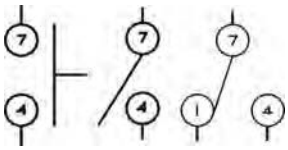

SH = Switch Hand Operated
切换手动操作

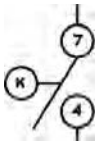

SK = Switch Key Operated
切换通过按键操作

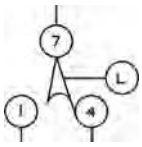

SL = Switch Level Operated
液位开关

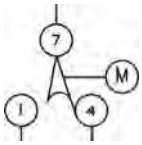

SM = Switch Mechanically Operated
机械操作开关

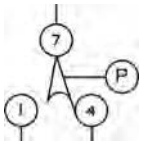

SP = Switch Pressure Operated
开关压力

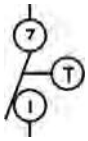

ST = Switch Temperature Operated
温度开关

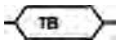

TB = Terminal Block
接线端子

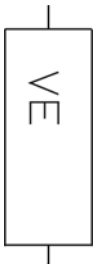

VE = Valve Electrically Operated
电磁阀

WC = Wiring Connector
接线连接器

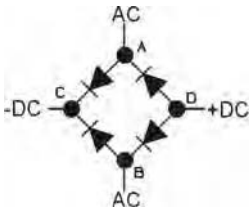

ZF = Rectifier
整流器

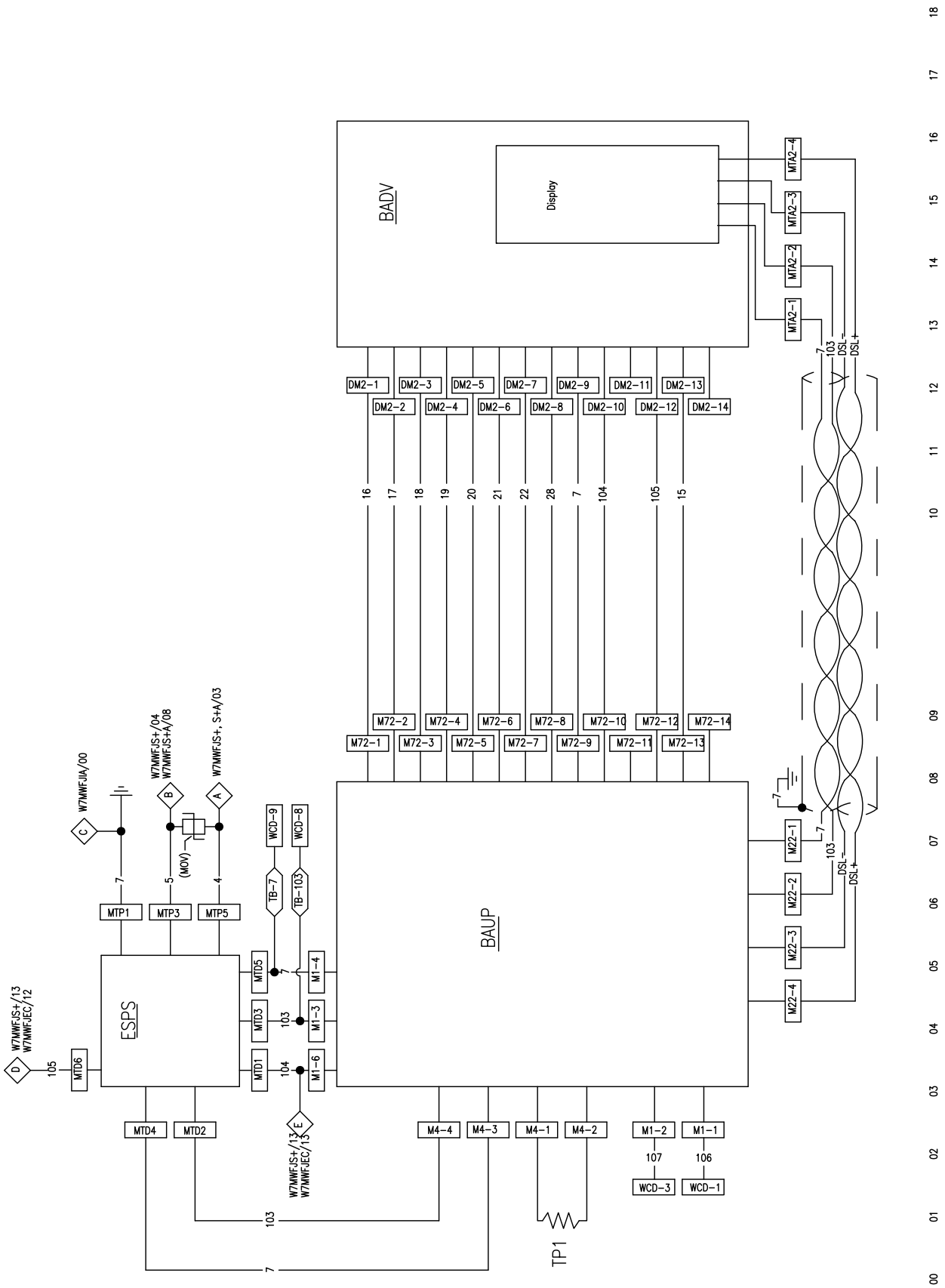

W7MWFJBWC

board wiring
板接线

PELLERIN MILNOR CORPORATION

2017314A

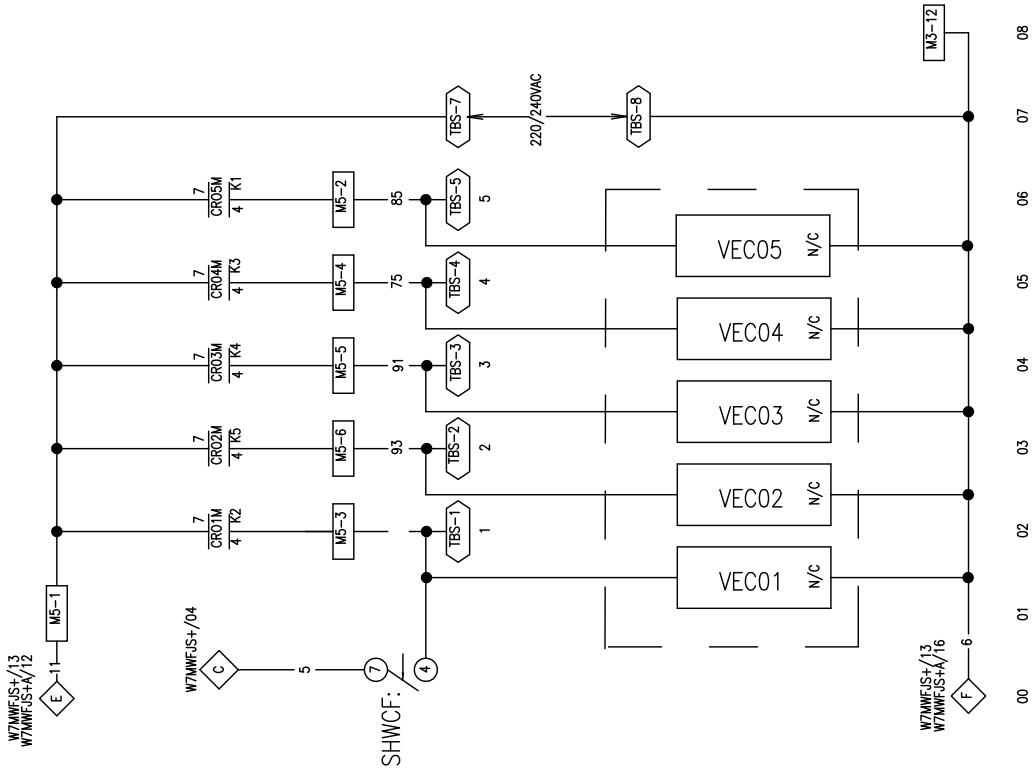

supplies
供给

W7MWFJCF C

PELLERIN MILNOR CORPORATION

2017314A

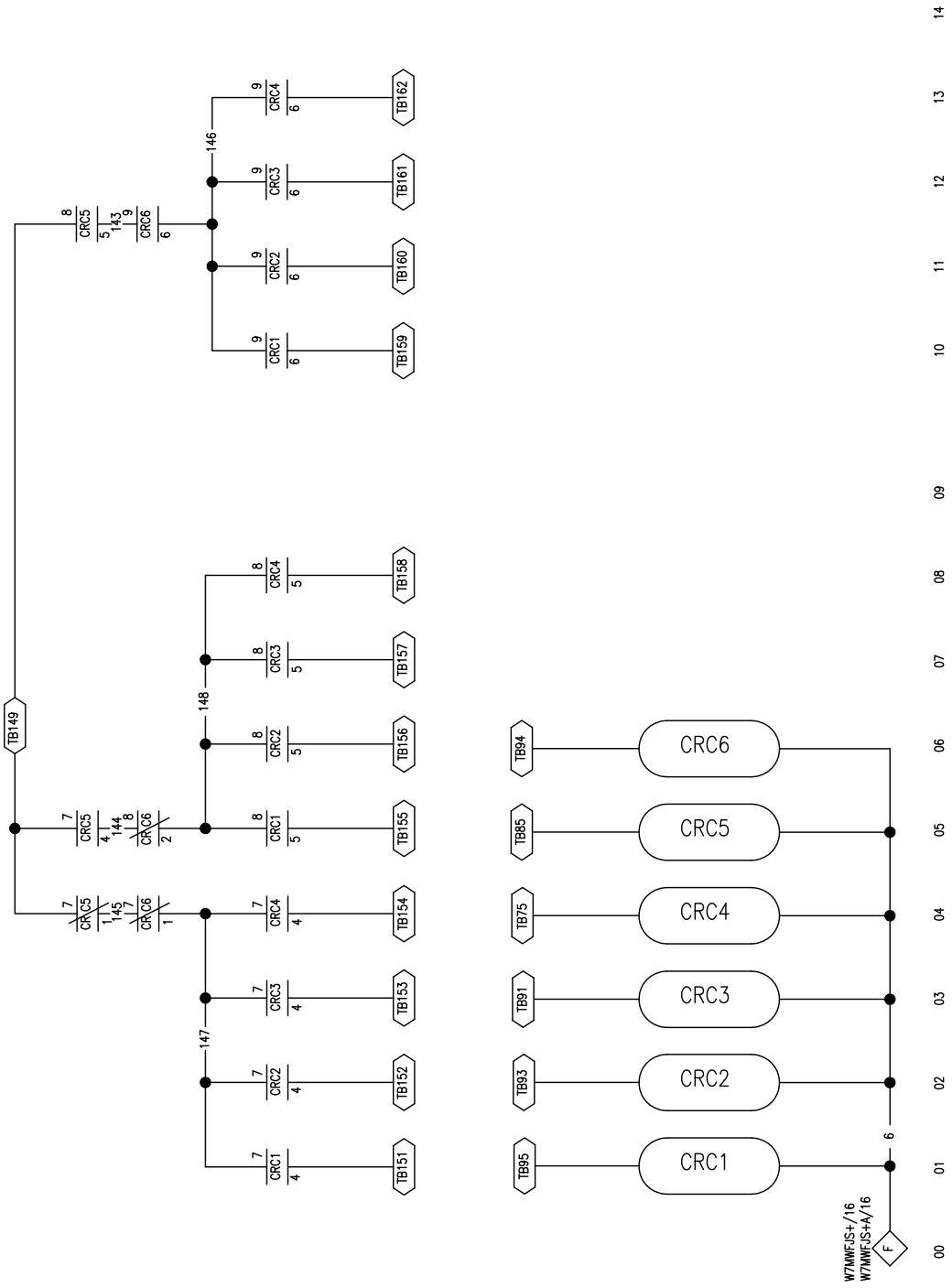

W7MWFJCMC

supplies

supplies / 供给

PELLERIN MILNOR CORPORATION

2017314A

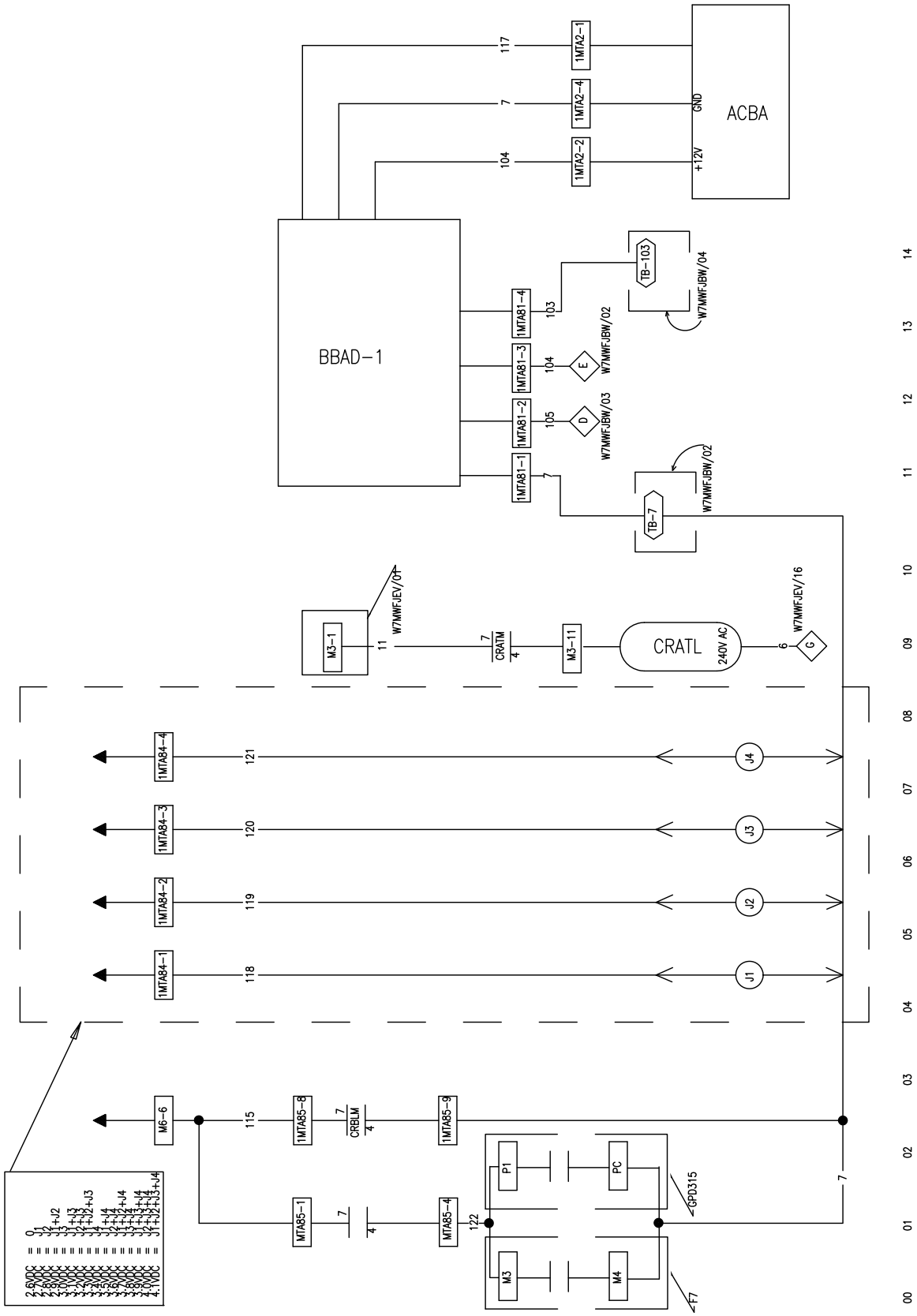

electronic balance
电子式均布控制

W7MWFJECC

PELLERIN MILNOR CORPORATION

2017314A

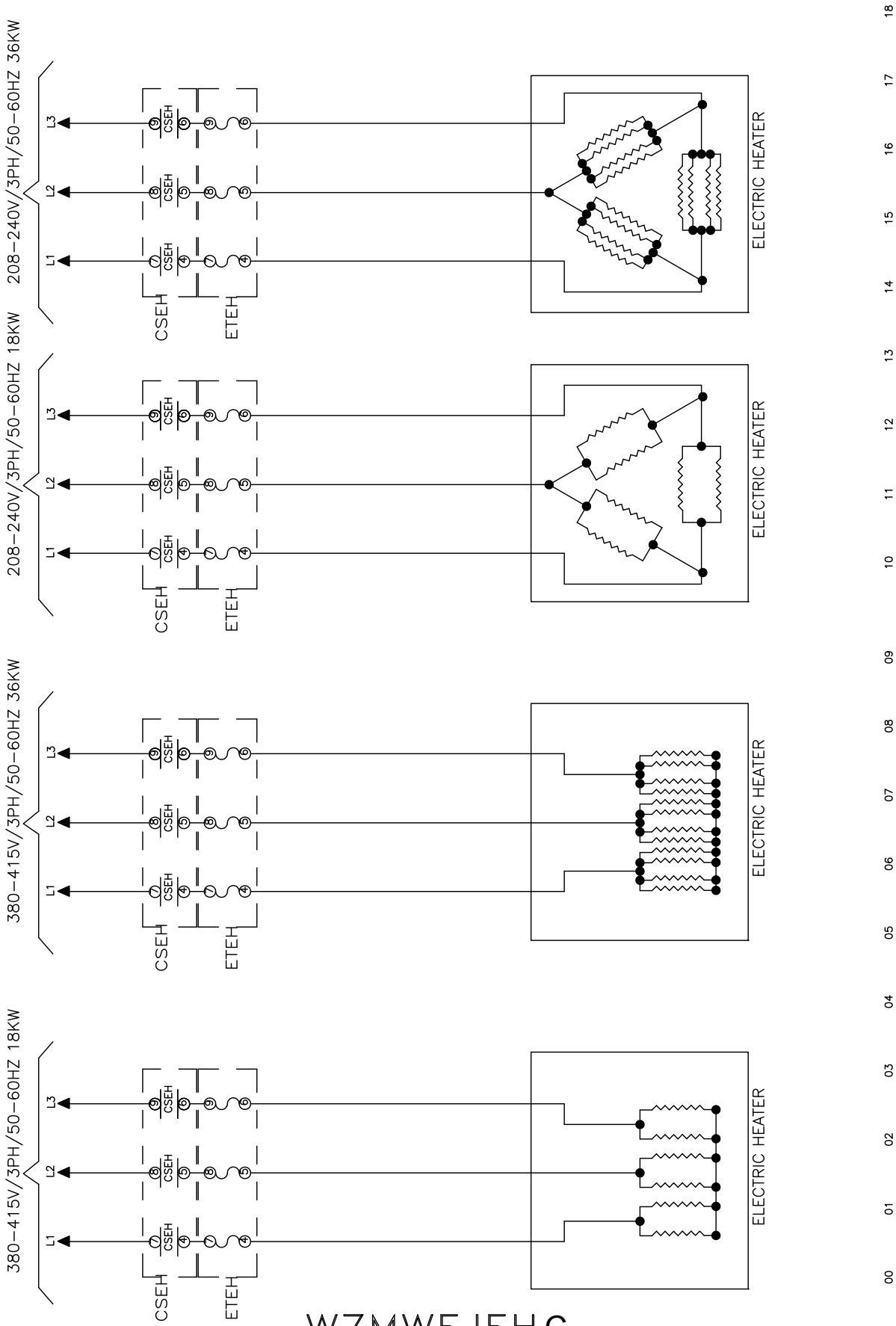

W7MWFJEHC

PELLERIN MILNOR CORPORATION

electric heat
电加热

2017314A

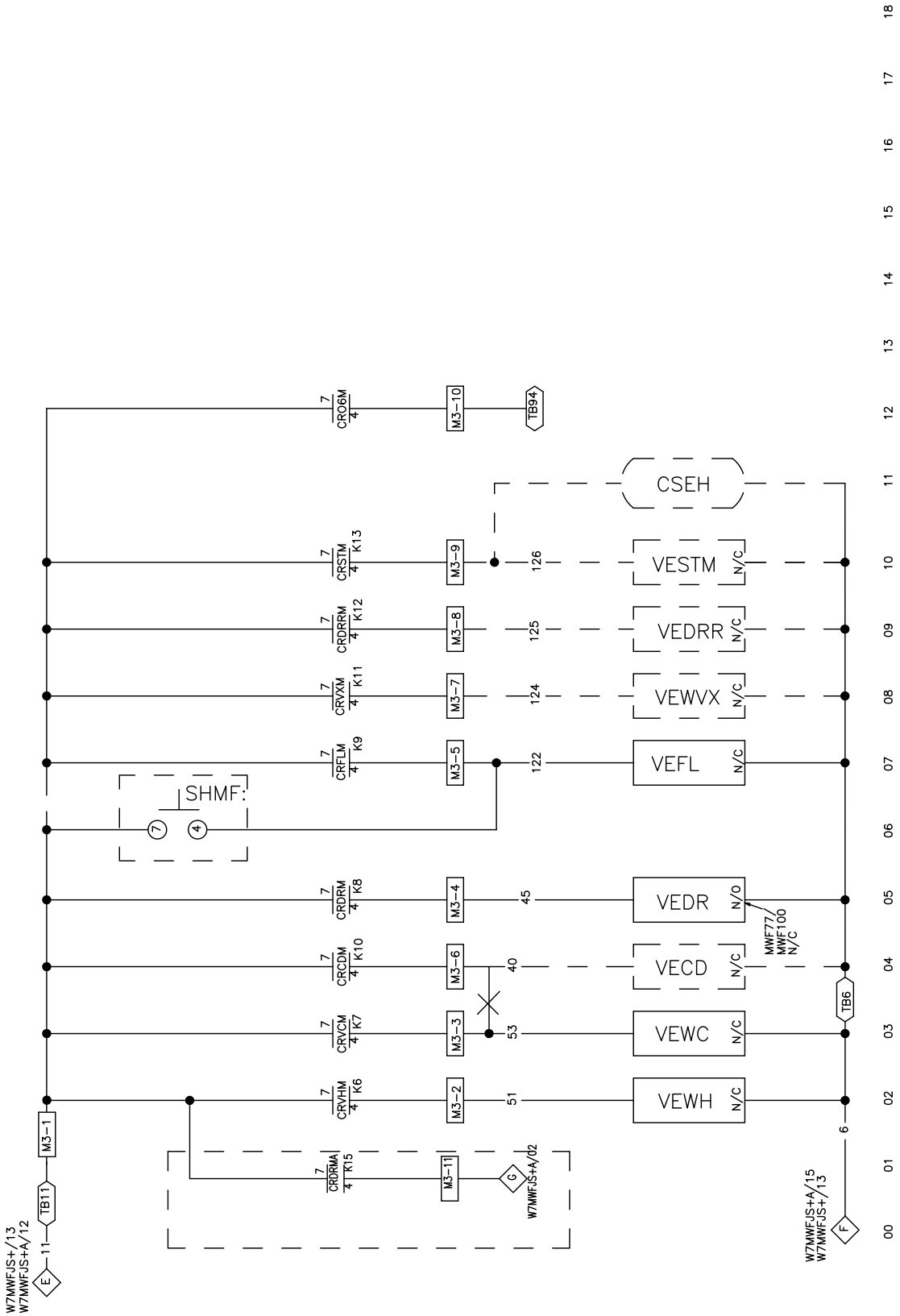

W7MWFJEVC

electric valves
电磁阀

PELLERIN MILNOR CORPORATION

2017314A

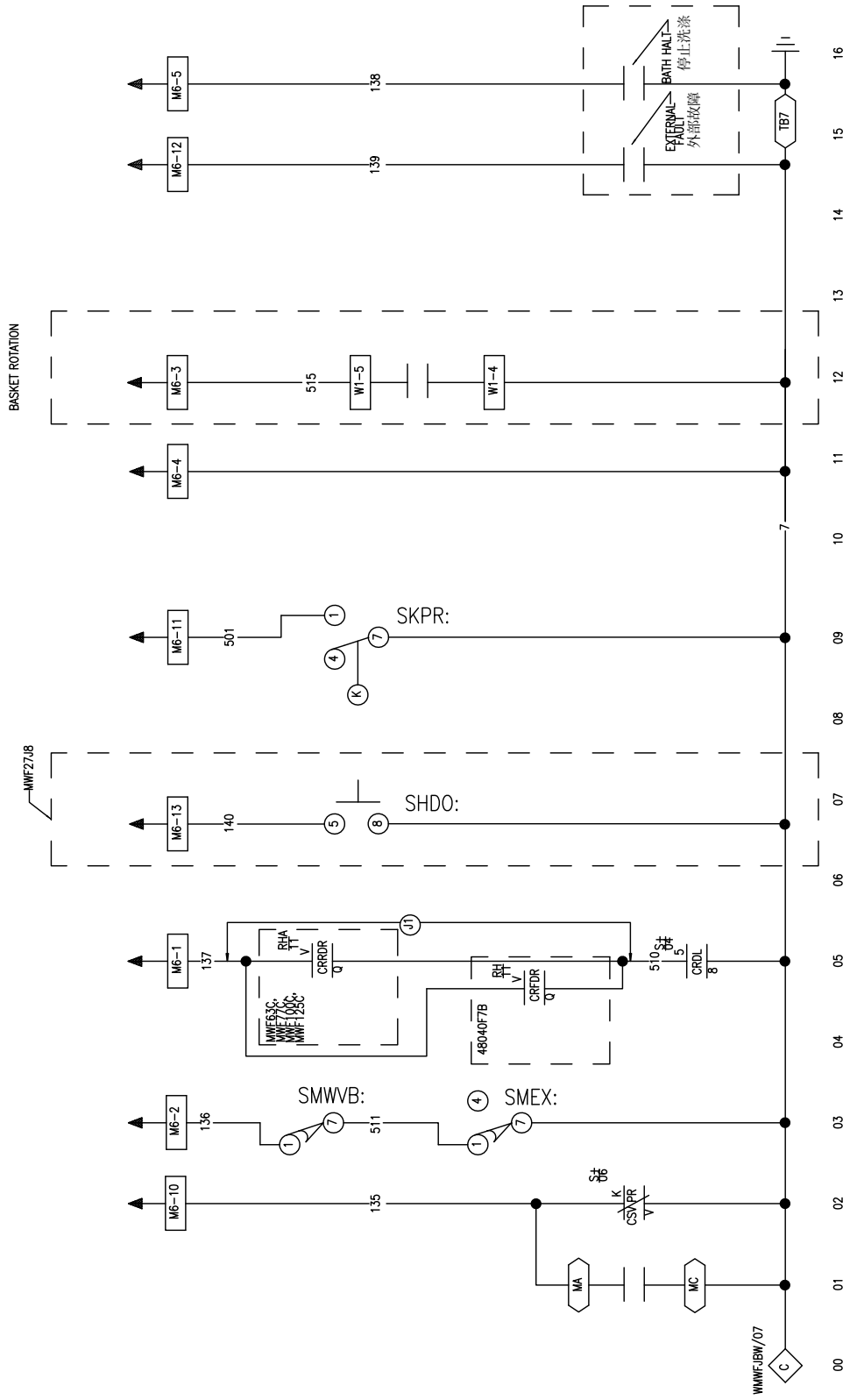

W7MWFJIAC

microprocessor inputs
处理器输入

PELLERIN MILNOR CORPORATION

2020394B

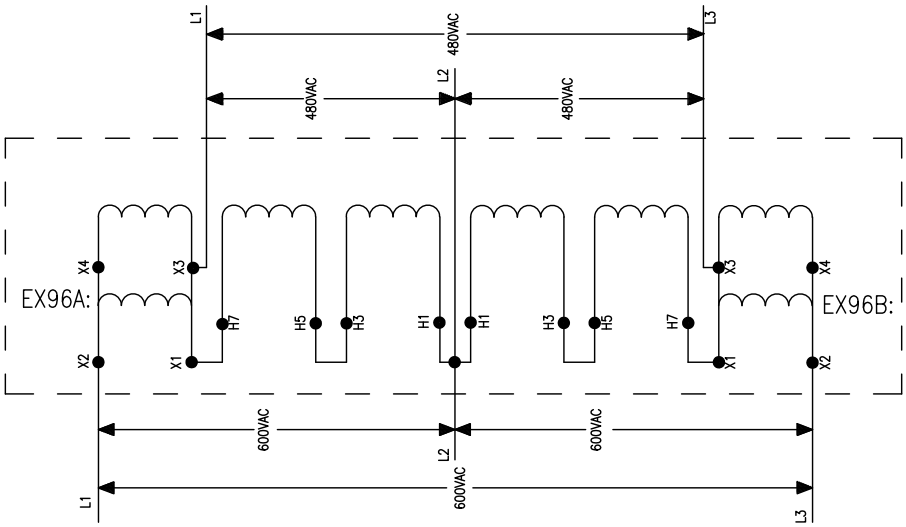

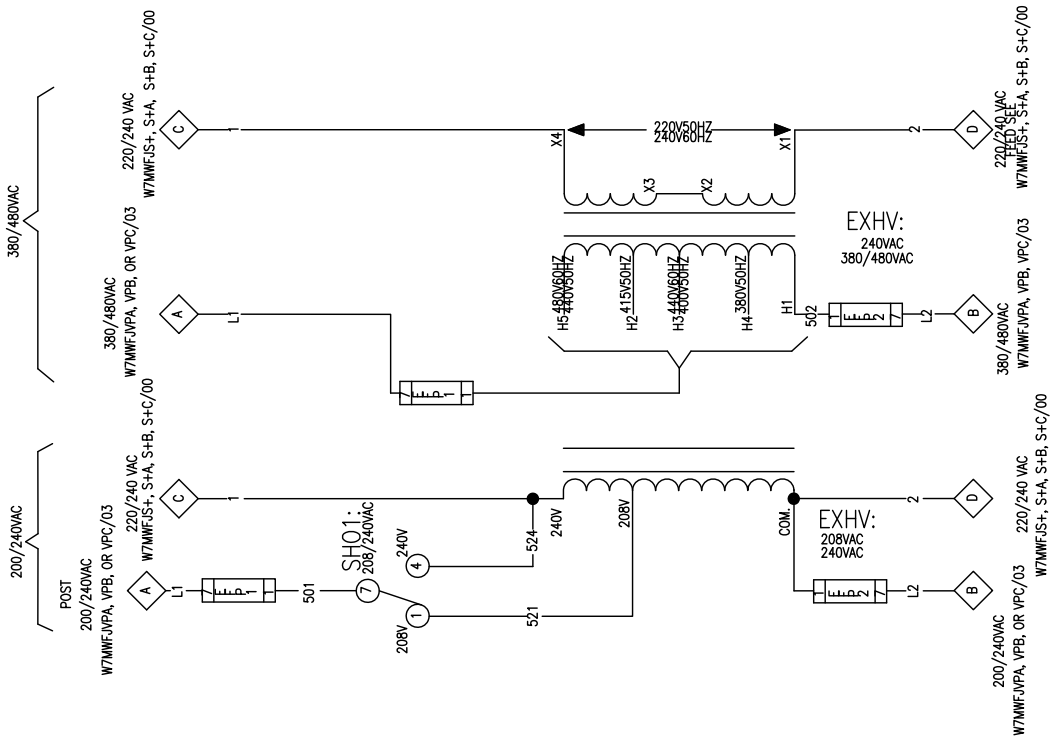

W7MWFJLVC

PELLERIN MILNOR CORPORATION

control transformers
控制变压器

2017314B

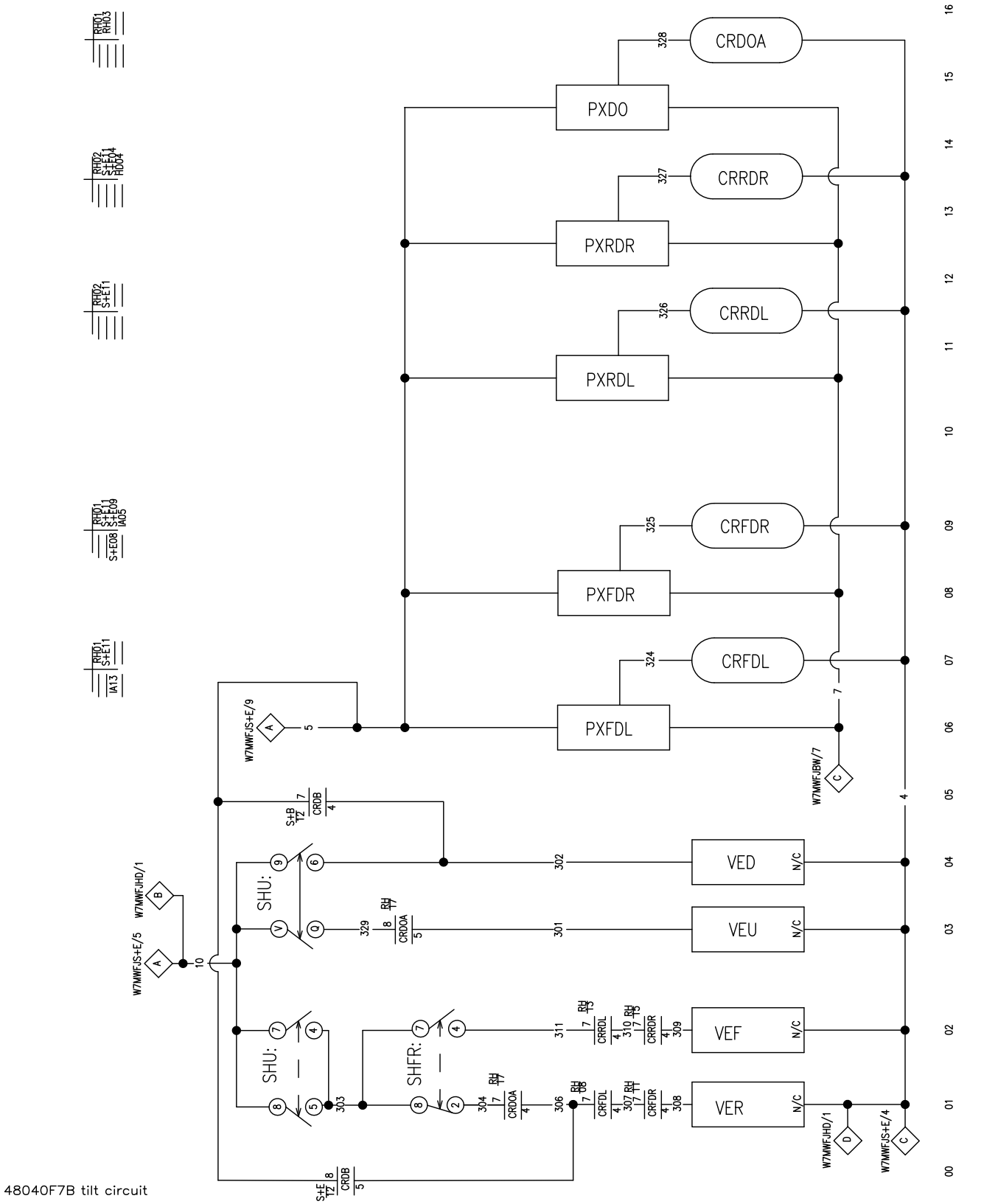

48040F7B tilt circuit

倾斜电路

W7MWFJRHC

PELLERIN MILNOR CORPORATION

2020394A

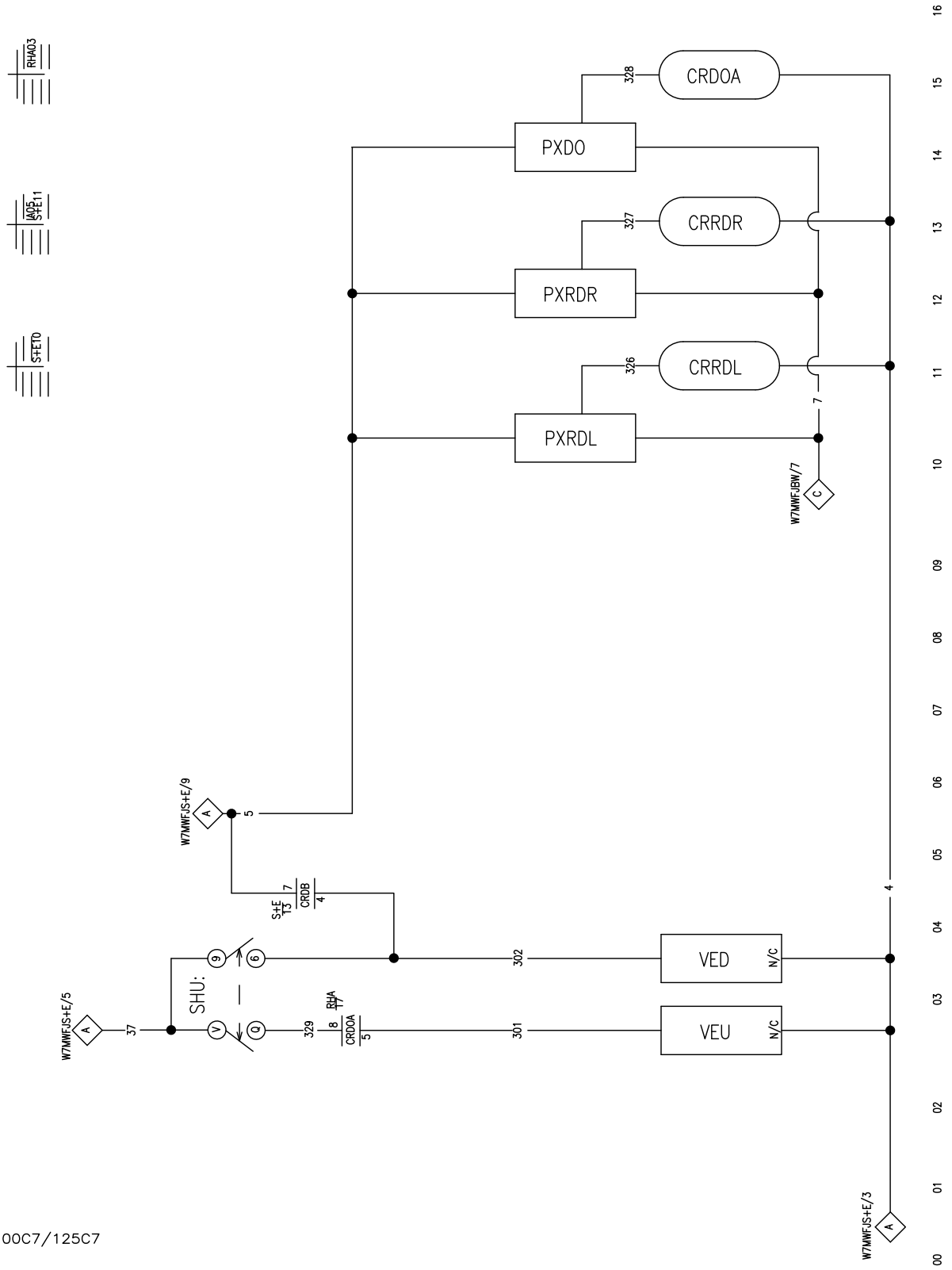

MWF63/77/100C7/125C7
tilt circuit
倾斜电路

W7MWFJRHAC

PELLERIN MILNOR CORPORATION

2020394A

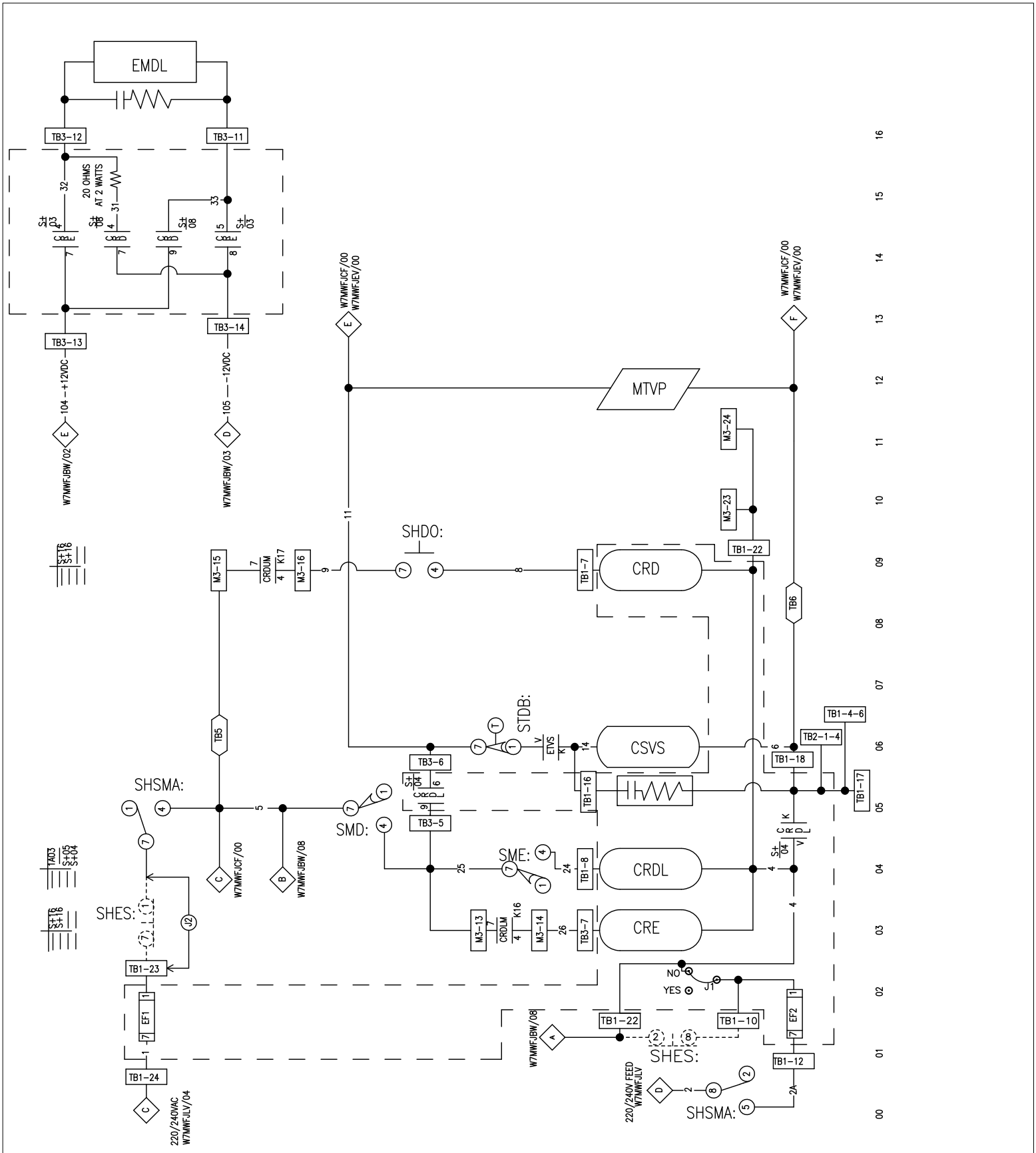

W7MWFJS+X

PELLERIN MILNOR CORPORATION

MWF27J8
start circuit
启动电路
circuito inicial

2025104B

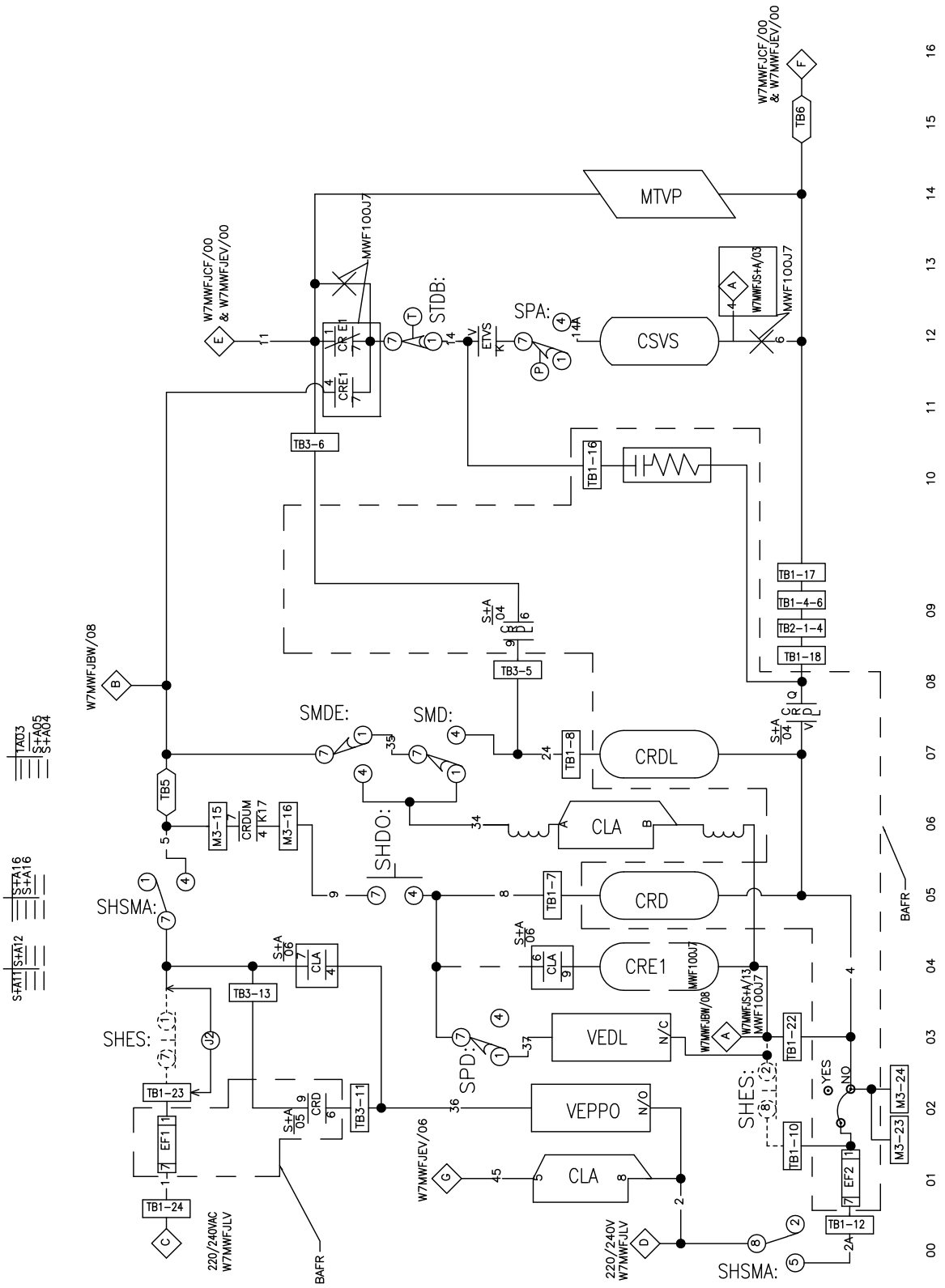

W7MWFJS+AC

MWF45, 63, 77 &100J7
start circuit
启动电路

PELLERIN MILNOR CORPORATION

2016432A

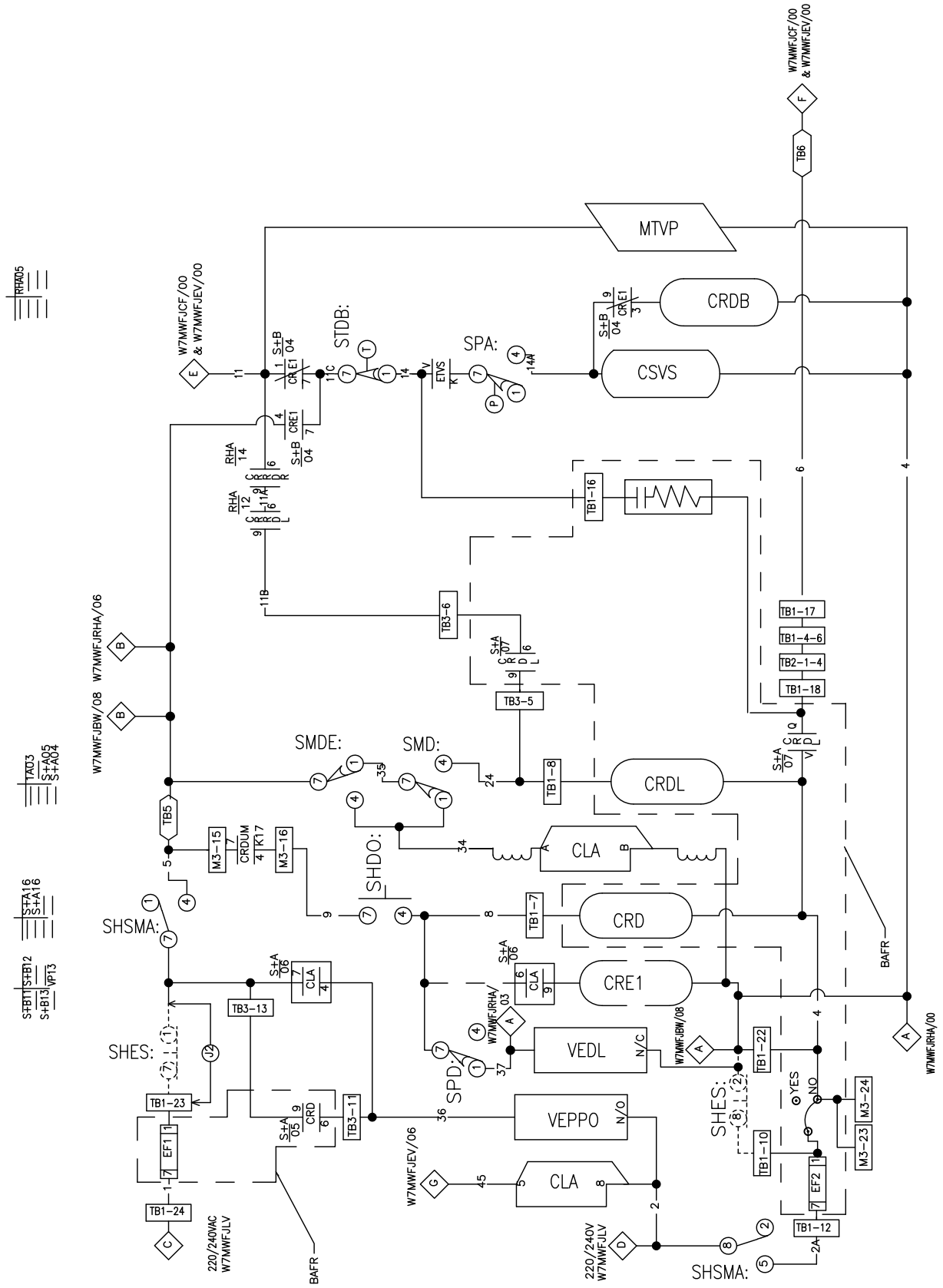

W7MWFJS+BC

MWF63C7, 77C7 &100C7
start circuit
启动电路

PELLERIN MILNOR CORPORATION

2020394A

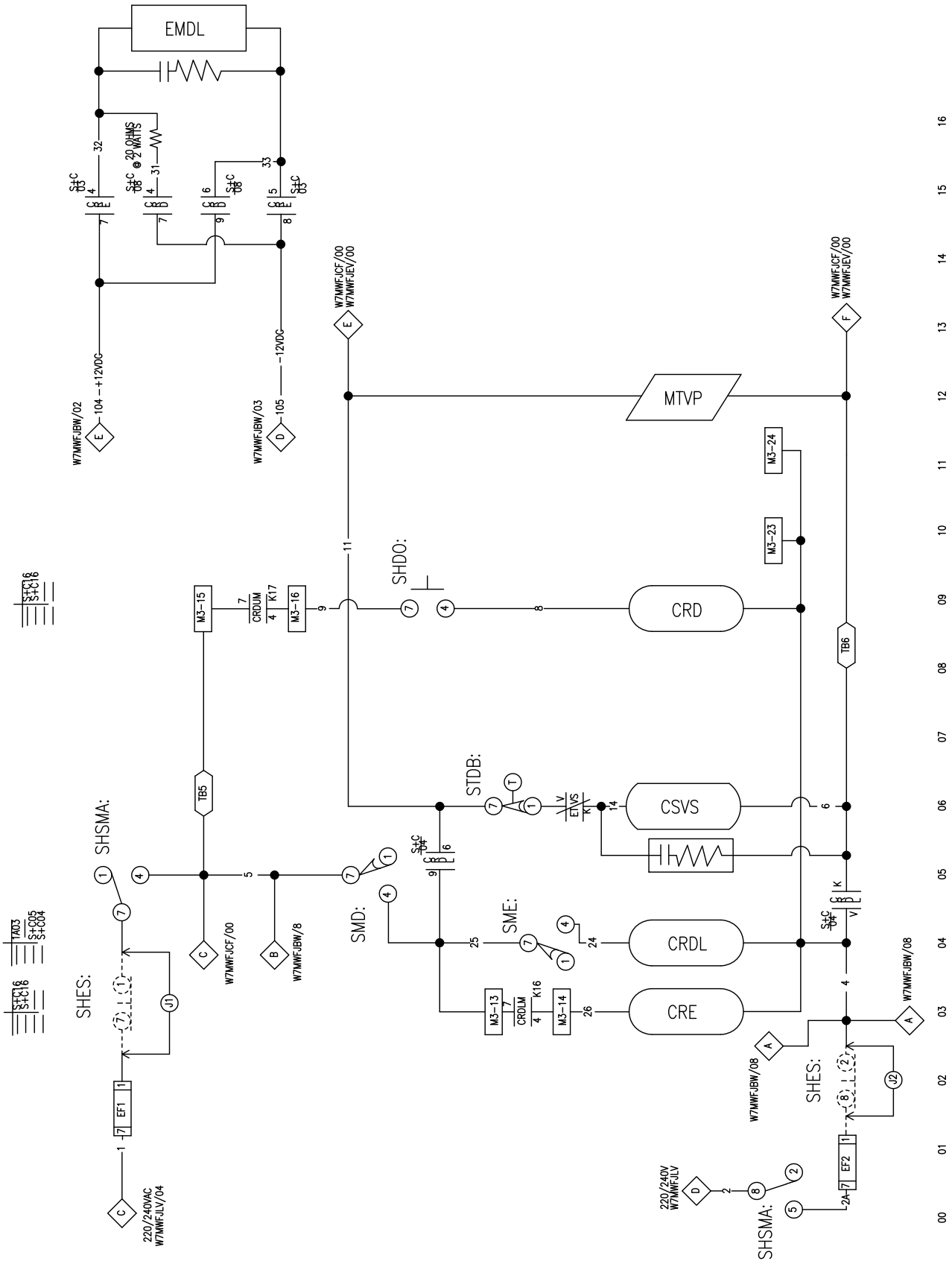

W7MWFJS+CX

MWF18/27J8 No Fuse Board
start circuit

启动电路无保险丝板

iniciar circuito sem placa de fus í veis

PELLERIN MILNOR CORPORATION

2025104A

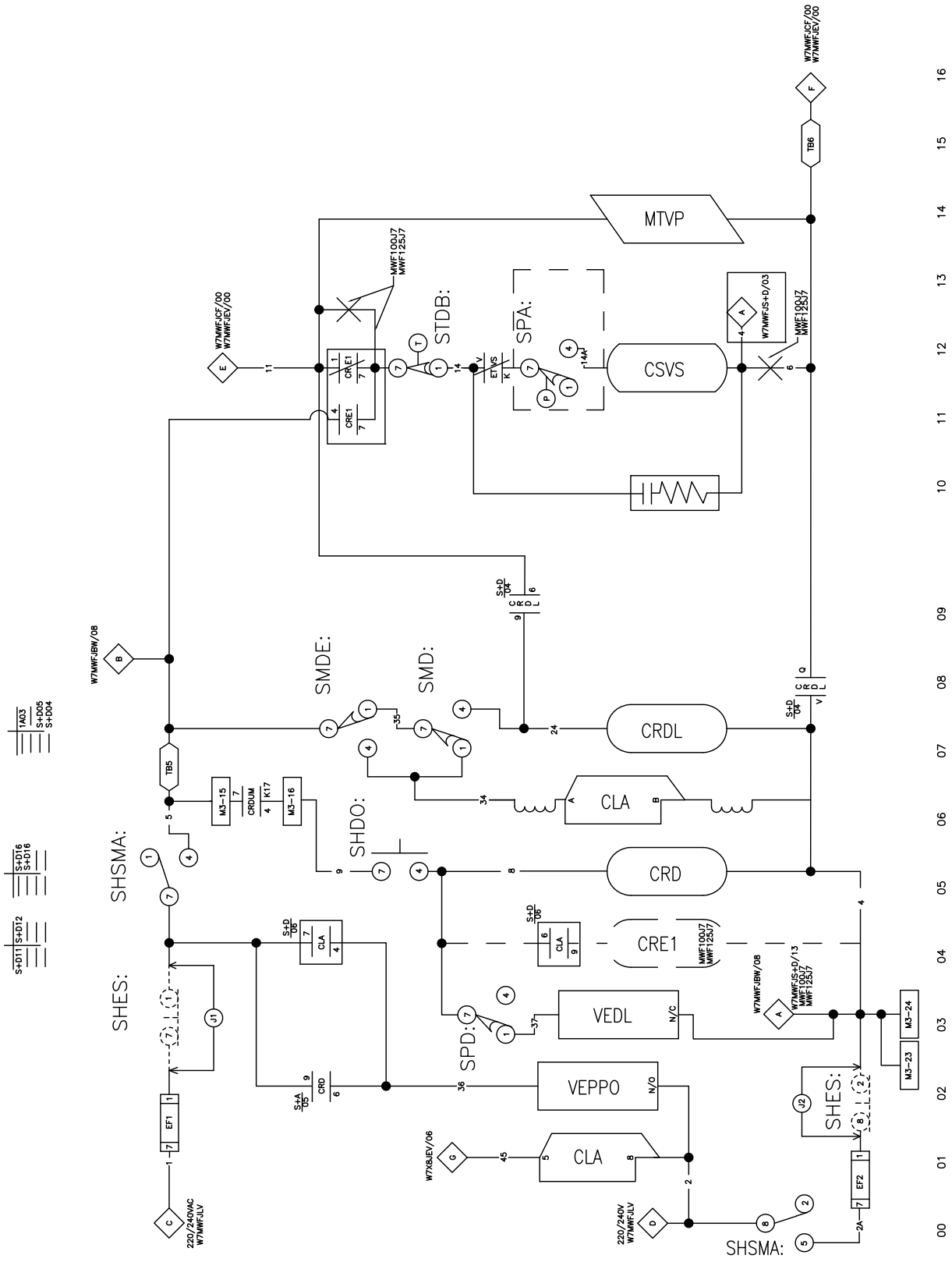

W7MWFJS+DC

MWF45, 63, 77,100J7 & 125J7
No Fuse Board
start circuit
启动电路

PELLERIN MILNOR CORPORATION

2020394A

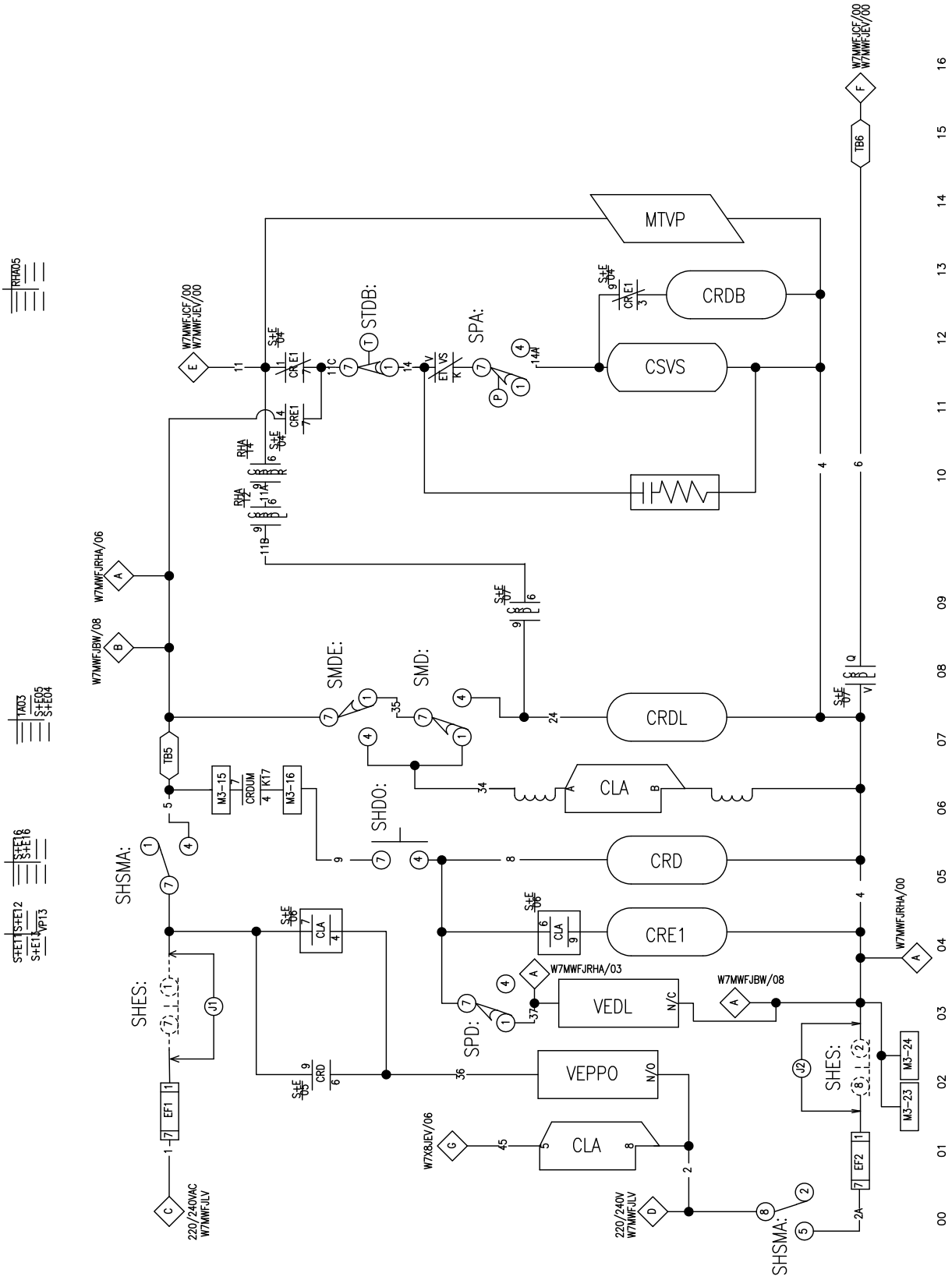

W7MWFJS+EC

PELLERIN MILNOR CORPORATION

2020394A

MWF63, 77, 100 & 125C7
start circuit
启动电路

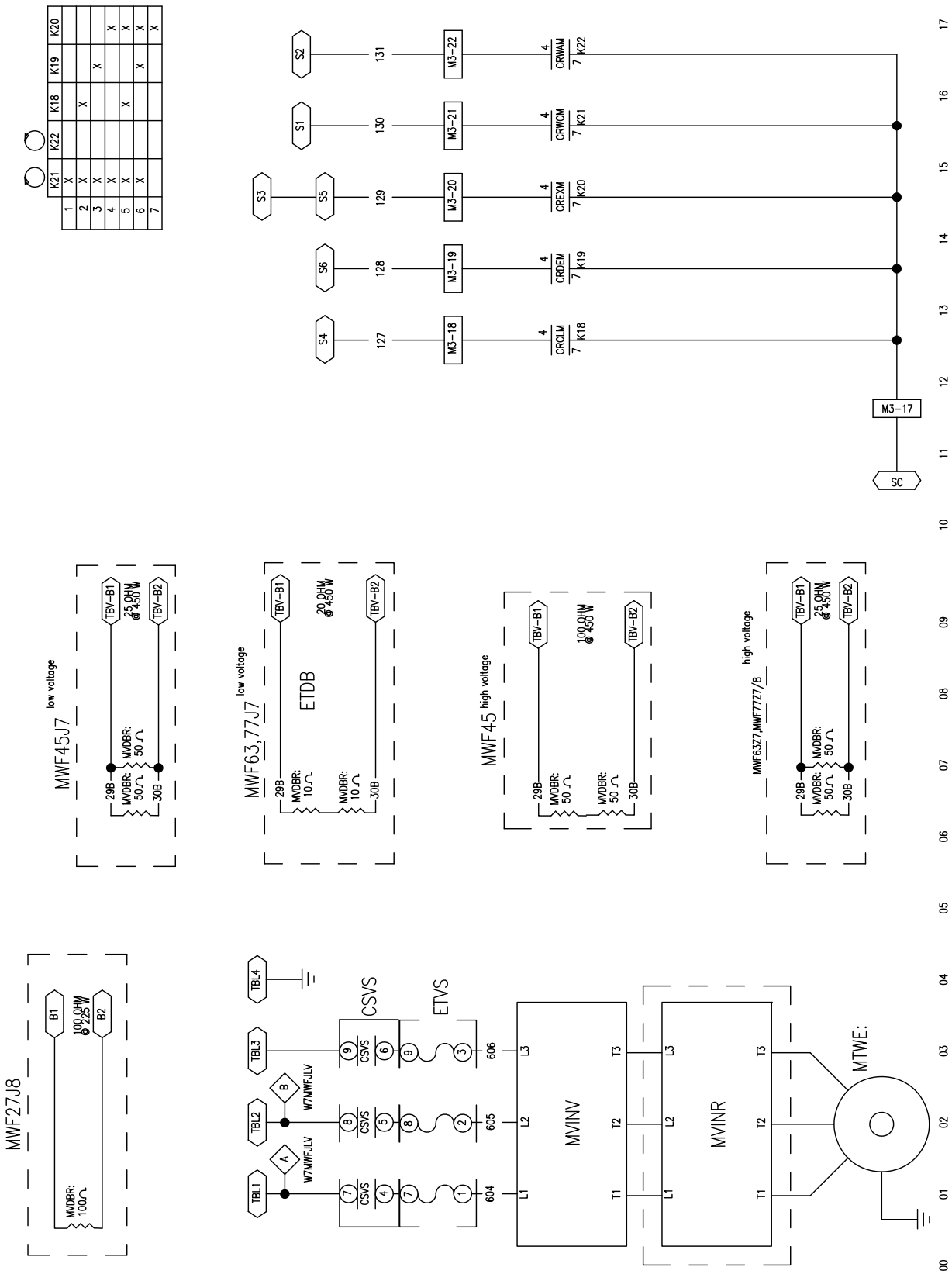

W7MWFJVPAC

PELLERIN MILNOR CORPORATION

MWF18–77
speed controller
调速器

2021072A

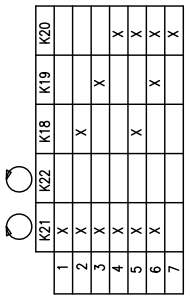

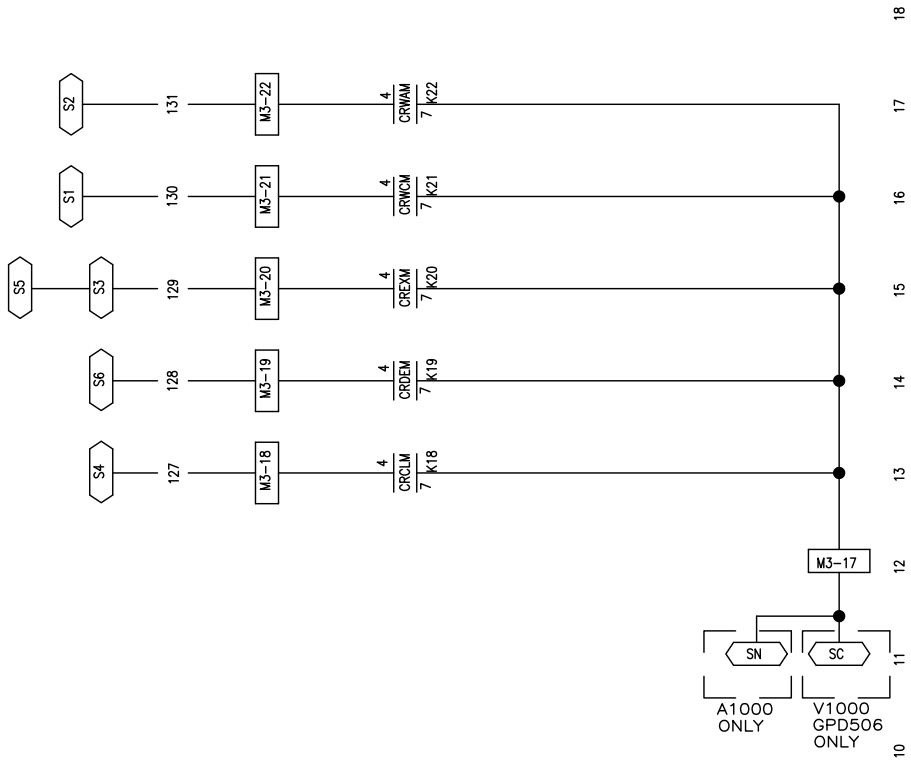

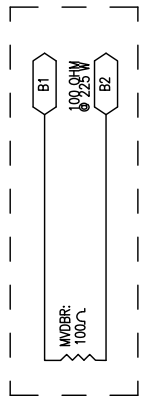

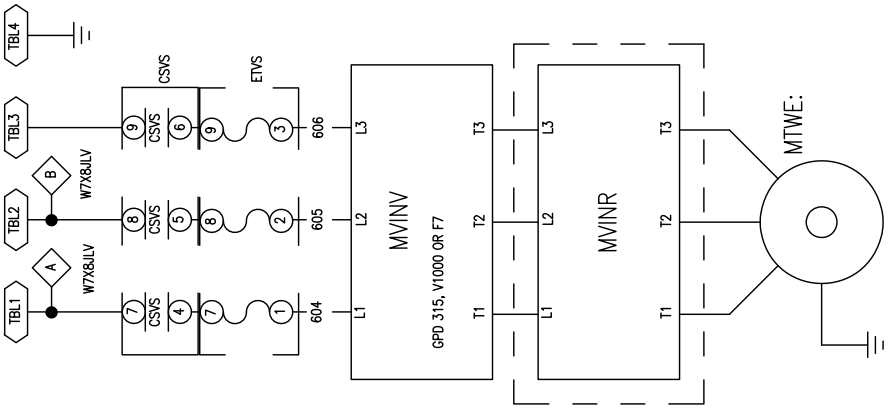

W7MWFJVPBC

PELLERIN MILNOR CORPORATION

MWF27,45,63,77J7,1PH
speed controller
调速器

2020424A

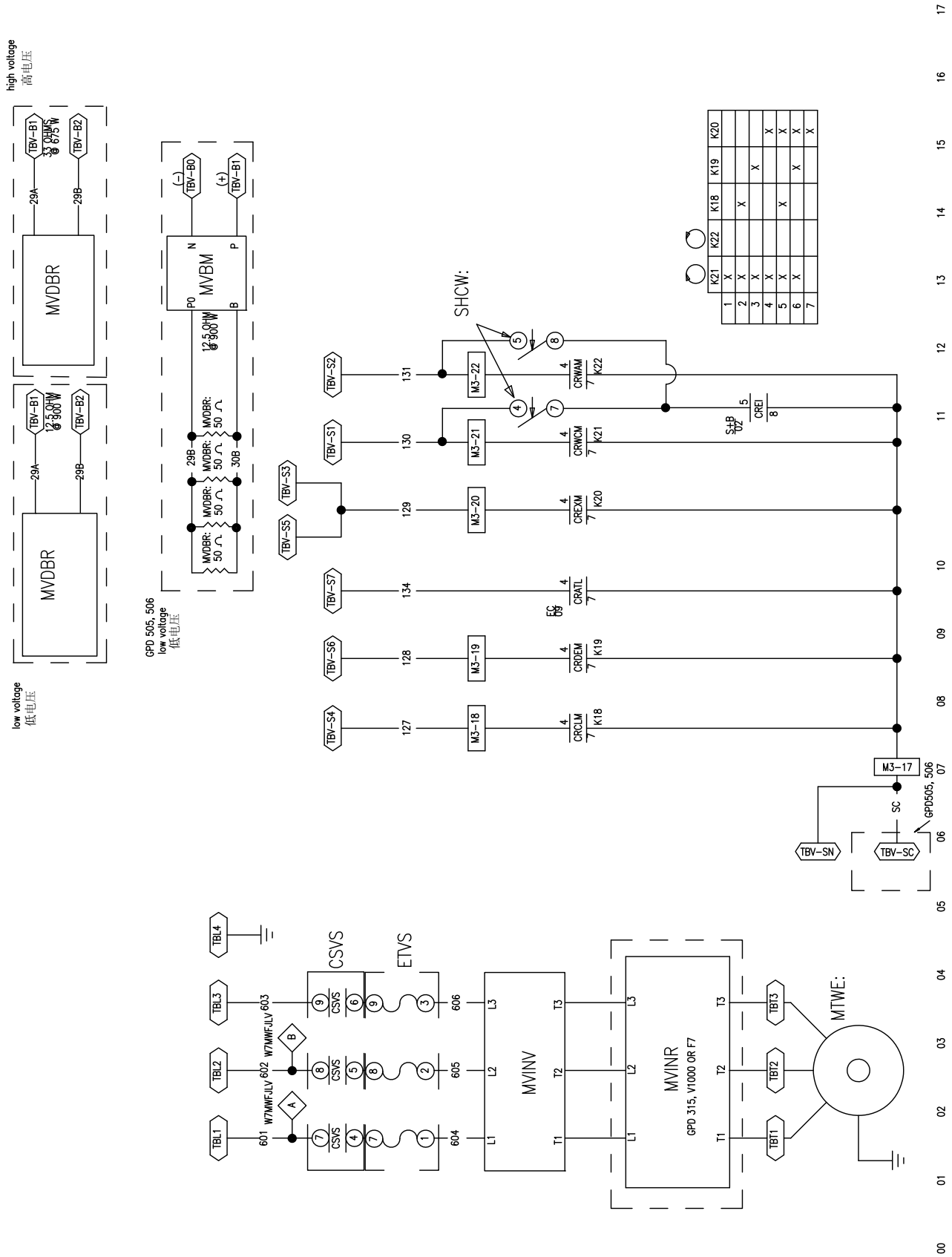

W7MWFJVPCC

MWF63C7, MWF77C7, MWF100J7/C7, MWF125J7/C7
speed controller
调速器

PELLERIN MILNOR CORPORATION

2020424A

English/Português

2

The text in this Circuit Guide is provided in the following languages:

1. **English**
2. Portuguese

O texto neste circuito guia é fornecido nos seguintes idiomas:

1. Inglês
2. **Português**

Read the separate safety manual before installing, operating, or servicing

---

Leia o manual separado de segurança antes de instalar, funcionar ou fazer a manutenção.

How to Get the Necessary Repair Components

You can get components to repair your machine from the approved supplier where you got this machine. Your supplier will usually have the necessary components in stock. You can also get components from the Milnor® factory.

Tell the supplier the machine model and serial number and this data for each necessary component:

- The component number from this manual
- The component name if known
- The necessary quantity
- The necessary transportation requirements
- The schematic number
- If the component is a motor or electrical control, give the nameplate data from the used component.

To write the Milnor factory:

Pellerin Milnor Corporation
Post Office Box 400
Kenner, LA 70063-0400
United States

Telephone: 504-467-2787
Fax: 504-469-9777
Email: parts@milnor.com

Como Obter os Componentes de Manutenção Necessários

Você pode obter componentes para consertar a sua máquina do fornecedor aprovado onde adquiriu esta máquina. O seu fornecedor geralmente terá os componentes necessários em estoque. Você também pode obter componentes da fábrica Milnor.

Informe ao fornecedor, o modelo e o número de série da máquina e estes dados para cada componente necessário:

- O número do componente fornecido neste manual
- O nome do componente, se conhecido
- A quantidade necessária
- Os requisitos de transporte necessários
- O número da visão esquemática
- Se o componente for um motor ou controle elétrico, forneça os dados da placa de identificação do componente usado

Para entrar em contato com a fábrica Milnor por escrito:

Pellerin Milnor Corporation
caixa postal 400
Kenner, LA 70063-0400
Estados Unidos

telefone: 504-467-2787
Fax: 504-469-9777
E-mail: parts@milnor.com

AC			
ACBA	< 7-2022	W7MWFJEC	EACCLRM3
ACBA	< 7-2022	W7MWFJEC	EACCLRM8
BA			
ACBA		W7MWFJEC	EACCLRM3
BADV		W7MWFJBW	98CMCR1823
BAFR		W7MWFJS+	08BHFRCT
BAFR		W7MWFJS+A	08BHFRCT
BAFR		W7MWFJS+B	08BHFRCT
BAUP		W7MWFJBW	98CMCR1822
BBAD-1		W7MWFJEC	98CMCR1822
CL			
CLA		W7MWFJS+A	09CL2C-C71
CLA		W7MWFJS+B	09CL2C-C71
CLA		W7MWFJS+D	09CL2C-C71
CLA		W7MWFJS+E	09CL2C-C71
CLA-CHOKE		W7MWFJS+B	10YCLCHOKE
CLA-CHOKE		W7MWFJS+A	10YCLCHOKE
CLA-CHOKE		W7MWFJS+D	10YCLCHOKE
CLA-CHOKE		W7MWFJS+E	10YCLCHOKE
CR			
CRALT		W7MWFJEC	09C024D71
CRC1		W7MWFJCM	09C024D71
CRC2		W7MWFJCM	09C024D71
CRC3		W7MWFJCM	09C024D71
CRC4		W7MWFJCM	09C024D71
CRC5		W7MWFJCM	09C024D71
CRC6		W7MWFJCM	09C024D71
CRD		W7MWFJS+	09C024D71
CRD		W7MWFJS+B	09C024D71
CRD		W7MWFJS+A	09C024D71
CRD		W7MWFJS+C	09C024D71
CRD		W7MWFJS+D	09C024D71
CRD		W7MWFJS+E	09C024D71
CRDB		W7MWFJS+B	09C024D71
CRDB		W7MWFJS+E	09C024D71
CRDL		W7MWFJS+	09C024D71
CRDL		W7MWFJS+B	09C024D71
CRDL		W7MWFJS+A	09C024D71
CRDL		W7MWFJS+C	09C024D71
CRDL		W7MWFJS+D	09C024D71
CRDL		W7MWFJS+E	09C024D71
CRDOA		W7X8ZRHA	09C024D71
CRDOA		W7MWFJRH	09C024D71
CRE		W7MWFJS+	09C024D71
CRE		W7MWFJS+C	09C024D71
CRE1		W7MWFJS+B	09C024D71
CRE1		W7MWFJS+D	09C024D71
CRE1		W7MWFJS+E	09C024D71
CRFDL		W7MWFJRH	09C024D71

CRFDR		W7MWFJRH	09C024D71
CRRDL		W7X8ZRHA	09C024D71
CRRDL		W7MWFJRH	09C024D71
CRRDR		W7X8ZRHA	09C024D71
CRRDR		W7MWFJRH	09C024D71
CS			
CSVS	MWF27J7	W7MWFJS+	98CMCR3004
CSVS	MWF45J7	W7MWFJS+A	98CMCR3601
CSVS	MWF63,77J7<250V	W7MWFJS+A	98CMCR4201
CSVS	MWF63,77J7>250V	W7MWFJS+A	98CMCR4202
CSVS	MWF63,77J/C7<250V	W7MWFJS+B	98CMCR4201
CSVS	MWF63,77J/C7>250V	W7MWFJS+B	98CMCR4202
CSVS		W7MWFJVPB	09MC08C371
CSVS	MWF100J7>250V	W7MWFJVPC	09MC08G371
CSVS	MWF100J7<250V	W7MWFJVPC	09MC08N371
CSVS		W7MWFJS+C	98CMCR3004
CSVS		W7MWFJS+D	98CMCR3601
CSVS		W7MWFJS+D	98CMCR4201
CSVS		W7MWFJS+D	98CMCR4202
CSVS		W7MWFJS+E	98CMCR4201
CSVS		W7MWFJS+E	98CMCR4202
EF			
EF1		W7MWFJS+	09FF002AMG
EF1		W7MWFJS+C	09FF002AMG
EF2		W7MWFJS+	09FF002AMG
EF2		W7MWFJS+B	09FF002AMG
EF2		W7MWFJS+B	09FF002AMG
EF2		W7MWFJS+A	09FF002AMG
EF2		W7MWFJS+A	09FF002AMG
EF2		W7MWFJS+C	09FF002AMG
EF2		W7MWFJS+D	09FF002AMG
EF2		W7MWFJS+D	09FF002AMG
EF2		W7MWFJS+E	09FF002AMG
EF2		W7MWFJS+E	09FF002AMG
EFP1		W7MWFJLV	09FF005AWN
EFP2		W7MWFJLV	09FF005AWN
EM			
EMDL		W7MWFJS+	09K063C24
EMDL		W7MWFJS+C	09K063C24
ES			
ESPS		W7MWFJBW	98CMCR3003
ET			
ETVS	MWF100J7 >250V	W7MWFJVPC	09FTD0121T
ETVS	MWF100J7 <250V	W7MWFJVPC	09FTD0230T
ETVS	MWF27J7	W7MWFJVPA	09FTD0120T
ETVS	MWF27J7 <250V	W7MWFJVPA	98CMCR3005
ETVS	MWF27J7 >250V	W7MWFJVPA	98CMCR3006
ETVS	MWF45J7 <250V	W7MWFJVPA	98CMCR3602
ETVS	MWF45J7 >250V	W7MWFJVPA	98CMCR3603
ETVS	MWF63,77J7 <250V	W7MWFJVPA	98CMCR4203

ETVS	MWF63,77J7 >250V	W7MWFJVPA	98CMCR4204
ETVS	MWF27J7 1PH	W7MWFJVPB	09FTD0120T
EX			
EXHV-1	208/240VAC	W7MWFJLV	98CMCR0902
EXHV-2	380-480VAV	W7MWFJLV	09UA025AAB
EXHV-3	600VAC	W7MWFJLV	09U251AB71
MT			
MTVP		W7MWFJS+A	13AF100A71
MTVP		W7MWFJS+D	13AF100A71
MTVP		W7MWFJS+E	13AF100A71
MTWE		W7MWFJVPA	MESSAGE SO
MTWE		W7MWFJVPB	MESSAGE SO
MTWE		W7MWFJVPC	MESSAGE SO
MV			
MVDBR	MWF27J7	W7MWFJVPA	09MV100RES
MVDBR	MWF45J7	W7MWFJVPA	09MV050REV
MVDBR	MWF63,77J7	W7MWFJVPA	09MV010REV
MVDBR	MWF27J7 1PH	W7MWFJVPB	09MV100RES
MVDBR	MWF100J7 <250V	W7MWFJVPC	09MV11DBRL
MVDBR	MWF100J7 >250V	W7MWFJVPC	09MV10DBRJ
MVINV-H	MWF27J7 >250V	W7MWFJVPA	09MWB00996
MVINV-H	MWF45J7 >250V	W7MWFJVPA	09MWB01896
MVINV-H	MWF63J7 >250V	W7MWFJVPA	09MWB02496
MVINV-H	MWF77J7 >250V	W7MWFJVPA	09MWB02496
MVINV-H	MWF100J7 >250V	W7MWFJVPB	09MWC03996
MVINV-L	MWF27J7 <250V	W7MWFJVPA	09MWB01774
MVINV-L	MWF45J7 <250V	W7MWFJVPA	09MWB03374
MVINV-L	MWF63J7 <250V	W7MWFJVPA	09MWB04774
MVINV-L	MWF77J7 <250V	W7MWFJVPA	09MWB04774
MVINV-L	MWF100J7 <250V	W7MWFJVPB	09MWC07574
PX			
PXDO		W7X8ZRHA	09RPS18CAS
PXDO		W7MWFJRH	09RPS18CAS
PXFDL		W7X8ZRHA	09RPS12AAS
PXFDL		W7MWFJRH	09RPS12AAS
PXFDR		W7MWFJRH	09RPS12AAS
PXRDL		W7MWFJRH	09RPS12AAS
PXRDR		W7X8ZRHA	09RPS12AAS
PXRDR		W7MWFJRH	09RPS12AAS
SH			
SH01		W7MWFJLV	08BHFRCT
SHCW		W7MWFJVPC	09N405M320
SHDO		W7MWFJIA	09N405PB10
SHDO		W7MWFJS+	09N405PB10
SHDO		W7MWFJS+B	09N405PB10
SHDO		W7MWFJS+A	09N405PB10
SHDO		W7MWFJS+C	09N405PB10
SHDO		W7MWFJS+D	09N405PB10
SHDO		W7MWFJS+E	09N405PB10
SHES		W7MWFJS+	09N508A

SHES		W7MWFJS+B	09N508A
SHES		W7MWFJS+A	09N508A
SHES		W7MWFJS+C	09N508A
SHES		W7MWFJS+D	09N508A
SHES		W7MWFJS+E	09N508A
SHMF		W7MWFJEV	09N405PB10
SHSMA		W7MWFJS+	09N405M220
SHSMA		W7MWFJS+B	09N405M220
SHSMA		W7MWFJS+A	09N405M220
SHSMA		W7MWFJS+C	09N405M220
SHSMA		W7MWFJS+D	09N405M220
SHSMA		W7MWFJS+E	09N405M220
SHU		W7X8ZRHA	09N405S320
SHU		W7MWFJRH	09N405S320
SHWCF		W7MWFJCF	09N405PB10
SK			
SKPR		W7MWFJIA	09N127C
SM			
SMD		W7MWFJS+	09R010D
SMD		W7MWFJS+B	09R014A
SMD		W7MWFJS+A	09R014A
SMD		W7MWFJS+C	09R010D
SMD		W7MWFJS+D	09R014A
SMD		W7MWFJS+E	09R014A
SMDE		W7MWFJS+B	09R012
SMDE		W7MWFJS+A	09R012
SMDE		W7MWFJS+D	09R012
SMDE		W7MWFJS+E	09R012
SME		W7MWFJS+	09R010D
SME		W7MWFJS+C	09R010D
SMEX		W7MWFJIA	09R008ASTD
SMWVB		W7MWFJIA	SAE03 151
SP			
SPA		W7MWFJS+B	09N082A
SPA		W7MWFJS+A	09N082A
SPA		W7MWFJS+D	09N082A
SPA		W7MWFJS+E	09N082A
SPBP		W7MWFJIA	09N082B05
SPBS		W7MWFJIA	09N082A
SPD		W7MWFJS+B	09N082B10
SPD		W7MWFJS+A	09N082B10
SPD		W7MWFJS+D	09N082B10
SPD		W7MWFJS+E	09N082B10
ST			
STDB		W7MWFJS+	30RA175T
STDB		W7MWFJS+A	30RA175T
STDB		W7MWFJS+C	30RA175T
STDB		W7MWFJS+D	30RA175T
STDB		W7MWFJS+E	30RA175T
VE			

VEBP		W7MWFJS+A	96TBC2BA71
VEBP		W7MWFJS+B	96TBC2BA71
VEBR		W7MWFJS+A	96R301B71
VEBR		W7MWFJS+B	96R301B71
VEC01		W7MWFJCF	96P013B71
VEC02		W7MWFJCF	96P013B71
VEC03		W7MWFJCF	96P013B71
VEC04		W7MWFJCF	96P013B71
VEC05		W7MWFJCF	96P013B71
VECD	MWF45CHEMICAL #4 <250C	W7MWFJEV	96P057A71
VECD	MWF45CHEMICAL #5 <250C	W7MWFJEV	96P056A71
VECD	MWF45<250C	W7MWFJEV	96P152A71
VECD	MWF45<250C	W7MWFJEV	96R301B71
VED	MWF63/77/100C7	W7X8ZRHA	96R301B71
VED		W7MWFJRH	96R301B71
VEDL	MWF45<250C	W7MWFJS+B	98CMCR3001
VEDL	MWF45<250C	W7MWFJS+A	98CMCR3001
VEDL		W7MWFJS+D	98CMCR3001
VEDL		W7MWFJS+E	98CMCR3001
VEDR	208/240VAC	W7MWFJEV	96D350A71
VEDR	MWF45<250D	W7MWFJEV	96R301B71
VEDRR	MWF45<250D	W7MWFJEV	96D350B71
VEDRR	MWF45<250D	W7MWFJEV	96R301B71
VEF		W7MWFJRH	96R301B71
VEFL	MWF45<250D	W7MWFJEV	96P057A71
VEFL	MWF45<250D	W7MWFJEV	96P056A71
VEFLS	MWF45MWF27<250M	W7MWFJEV	96P013G71
VEPPO	MWF45MWF45,63,77<250M	W7MWFJS+A	98CMCR3002
VEPPO	MWF45MWF45,63,77<250M	W7MWFJS+B	98CMCR3002
VEPPO		W7MWFJS+D	98CMCR3002
VEPPO		W7MWFJS+E	98CMCR3002
VER		W7MWFJRH	96R301B71
VESTM	MWF45FLUSH <250F	W7MWFJEV	98CMCR3001
VESTM	MWF45<250D	W7MWFJEV	96R301B71
VEU	MWF63/77/100C7	W7X8ZRHA	96R301B71
VEU		W7MWFJRH	96R301B71
VEWC	MWF45MWF45,63,77<250M	W7MWFJEV	96P057A71
VEWC	MWF45<250S	W7MWFJEV	98CMCR3001
VEWC	MWF45<250C	W7MWFJEV	98CMCR3001
VEWC	MWF45<250C	W7MWFJEV	96R301B71
VEWC	MWF45<250C	W7MWFJEV	98CMCR3001
VEWC	MWF45<250C	W7MWFJEV	98CMCR3001
VEWH	MWF45<250H	W7MWFJEV	96P057A71
VEWH	MWF45<250H	W7MWFJEV	96R301B71
VEWVX	MWF45<250H	W7MWFJEV	96P057A71
VEWVX	MWF45<250H	W7MWFJEV	96P056A71
VEWVX	MWF45<250E	W7MWFJEV	96P152A71
VEWVX	MWF45<250E	W7MWFJEV	96R301B71

Legend of Symbols
Legenda dos símbolos

BA = Printed Circuit Board
Placa de circuito impresso

CB = Circuit Breaker
Disjuntor

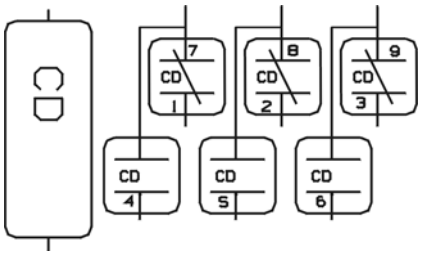

CD = Time Delay Relay
Relé de ação retardada

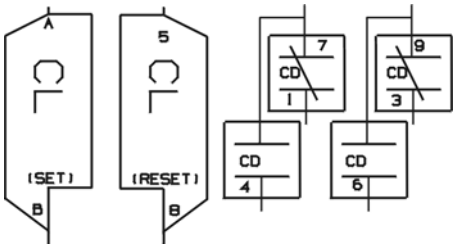

CL = Latch Relay
Relé de trava

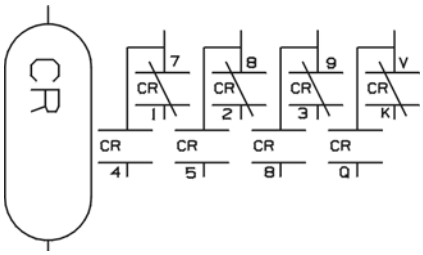

CR = Relay
Relé

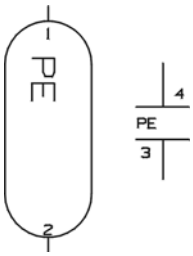

CP = Photo-Eye
Fotoelétrico

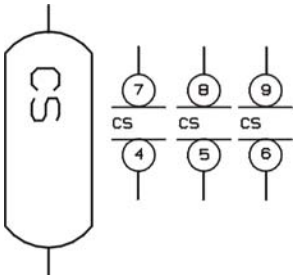

CS = Contactor/Motor Starter
Contator/Arranque do Motor

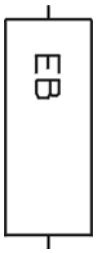

EB = Audible Signal
Sinal Sonoro

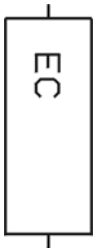

EC = Clutch
Embreagem

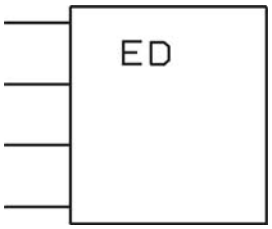

ED = Electronic Display
Tela eletrônica

EF = Fuse
Fusível

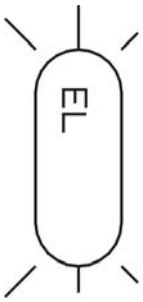

EL = Light
Luz

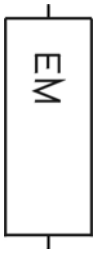

EM = Electro Magnatic Solenoid
Solenoide eletromagnético

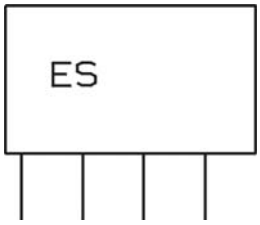

ES = Electronic Power Supply
Fonte de alimentação eletrônica

ET = Thermal Overload
Sobrecarga térmica

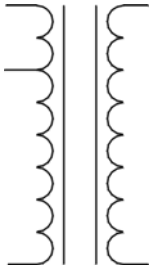

EX = Transformer
Transformador

KB = Keyboard/Keypad
Teclado/Teclado

MN = Electronic Monitor
Monitor eletrônico

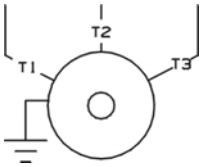

MR = Motor
Motor

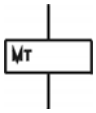

MT = Board Connector
Conector da placa

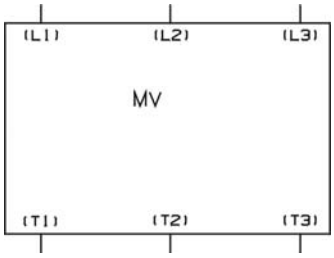

MV = Motor Inverter
Inversor do Motor

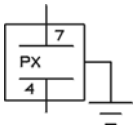

PX = Proximity Switch
Sensor de proximidade

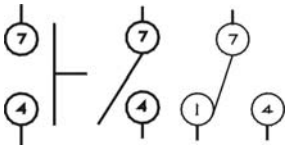

SH = Switch Hand Operated
Interruptor, Acionado à mão

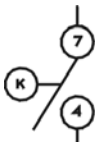

SK = Switch Key Operated
Interruptor, Acionado por teclado

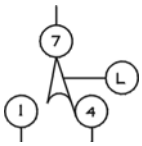

SL = Switch Level Operated
Interruptor, Acionado por nível

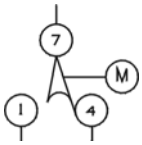

SM = Switch Mechanically Operated
Interruptor, Acionado mecanicamente

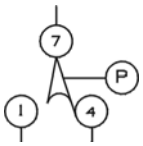

SP = Switch Pressure Operated
Interruptor, Acionado por pressão

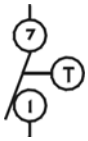

ST = Switch Temperature Operated
Interruptor, Acionado por temperatura

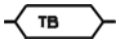

TB = Terminal Block
Bloco terminal

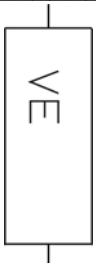

VE = Valve Electrically Operated
Válvula, Acionada por energia elétrica

WC = Wiring Connector
Conector de fiação elétrica

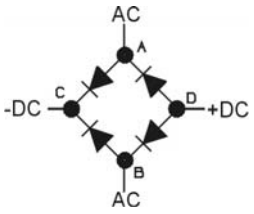

ZF = Rectifier
Retificador

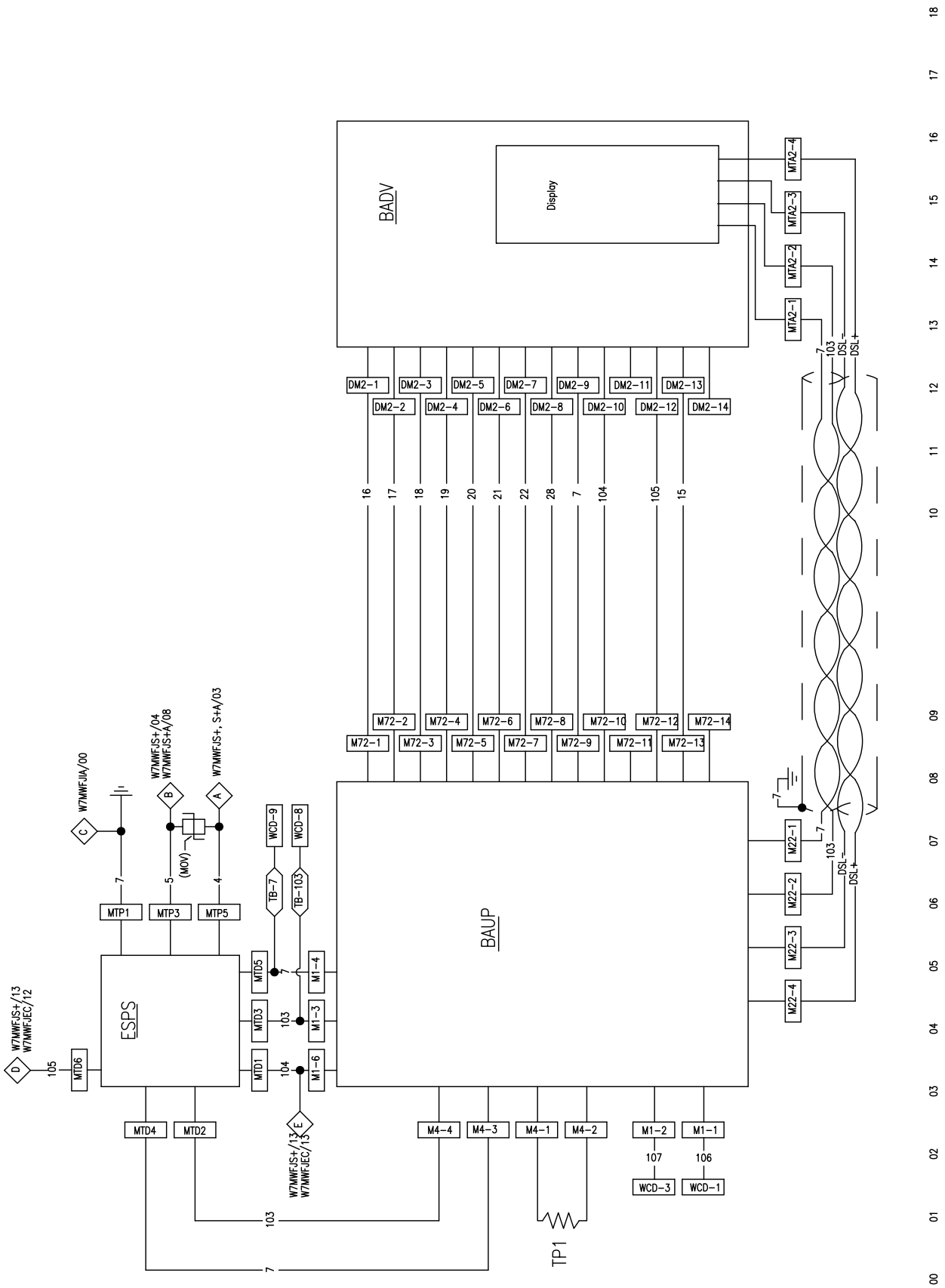

W7MWFJBWP

board wiring
Fiação da placa

PELLERIN MILNOR CORPORATION

2017314A

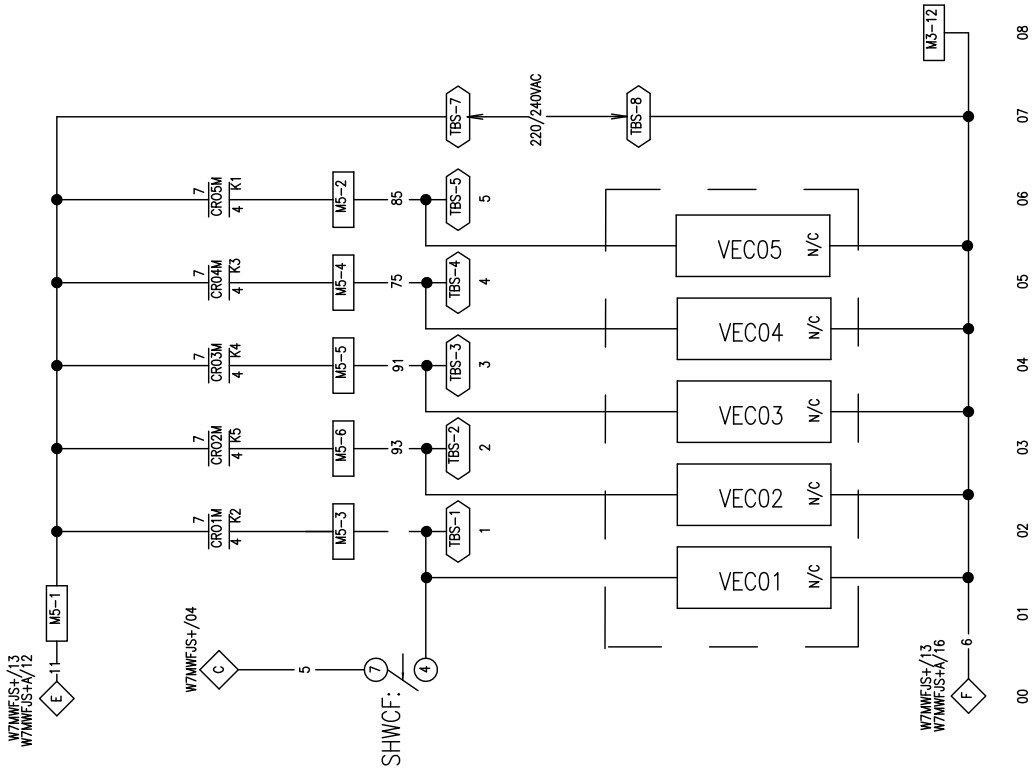

W7MWFJCFP

PELLERIN MILNOR CORPORATION

supplies
materiais

2017314A

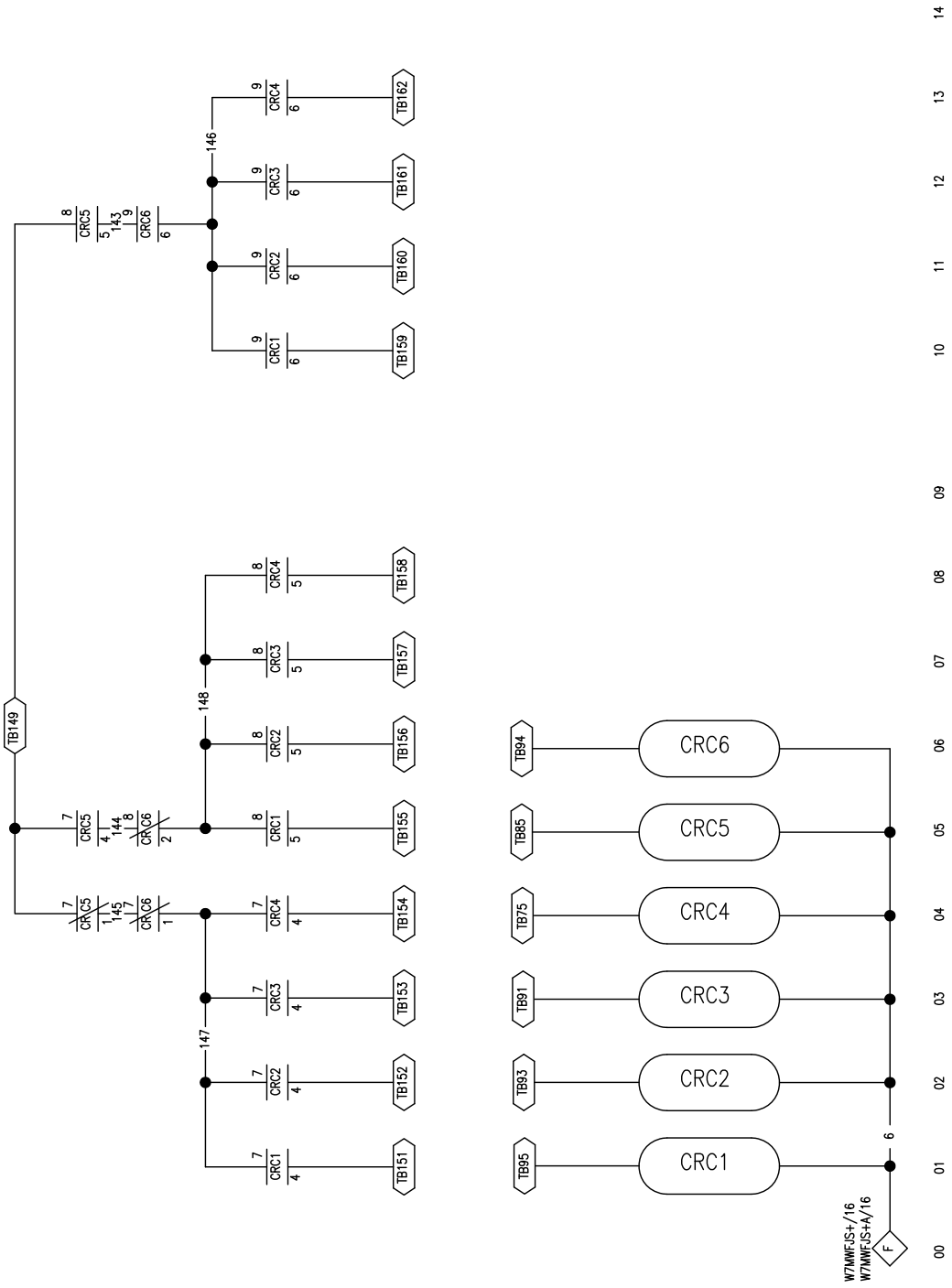

W7MWFJCMP

supplies

12 produtos qu í micos

PELLERIN MILNOR CORPORATION

2017314A

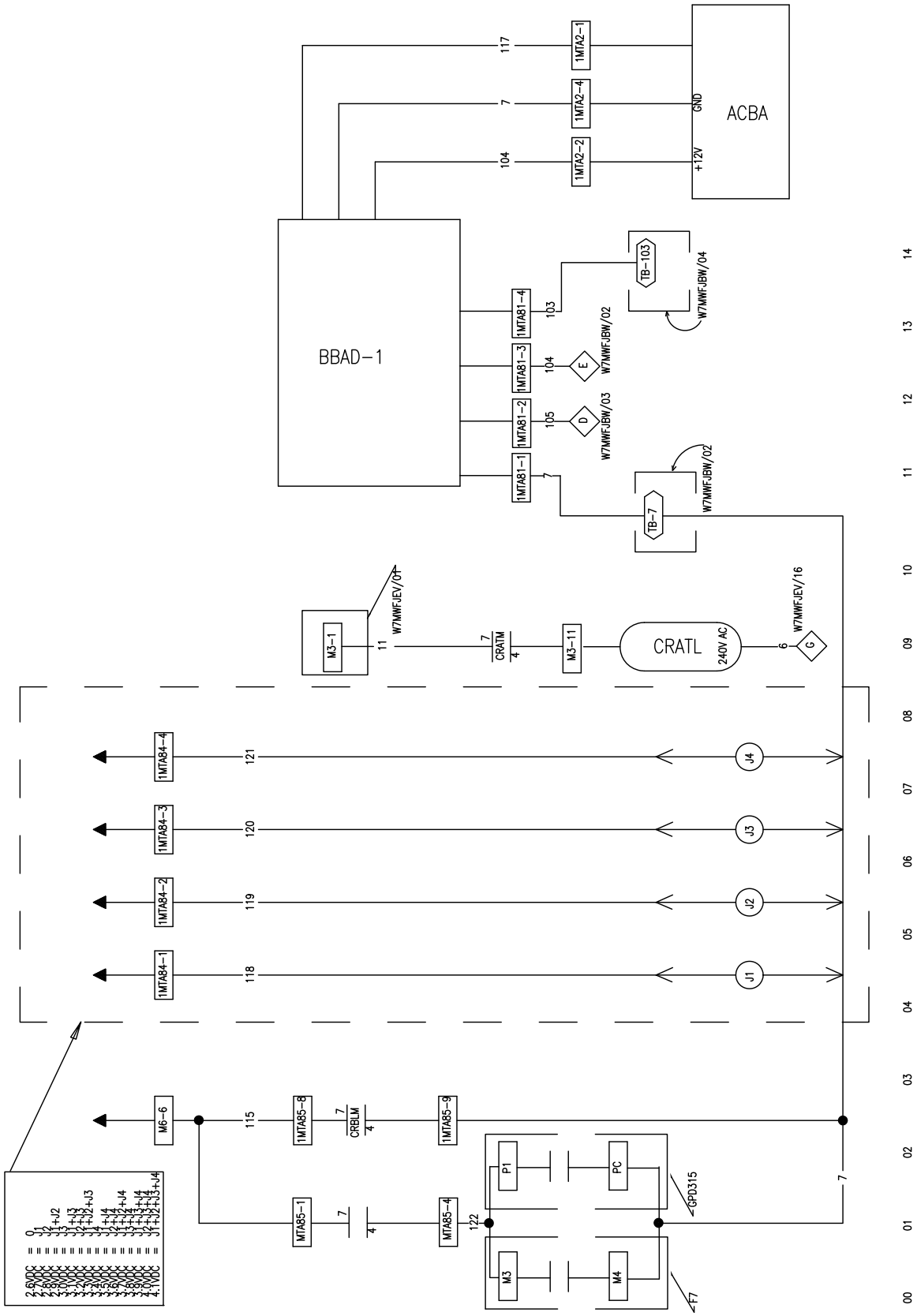

W7MWFJECP

PELLERIN MILNOR CORPORATION

electronic balance
equil í brio eletrônico

2017314A

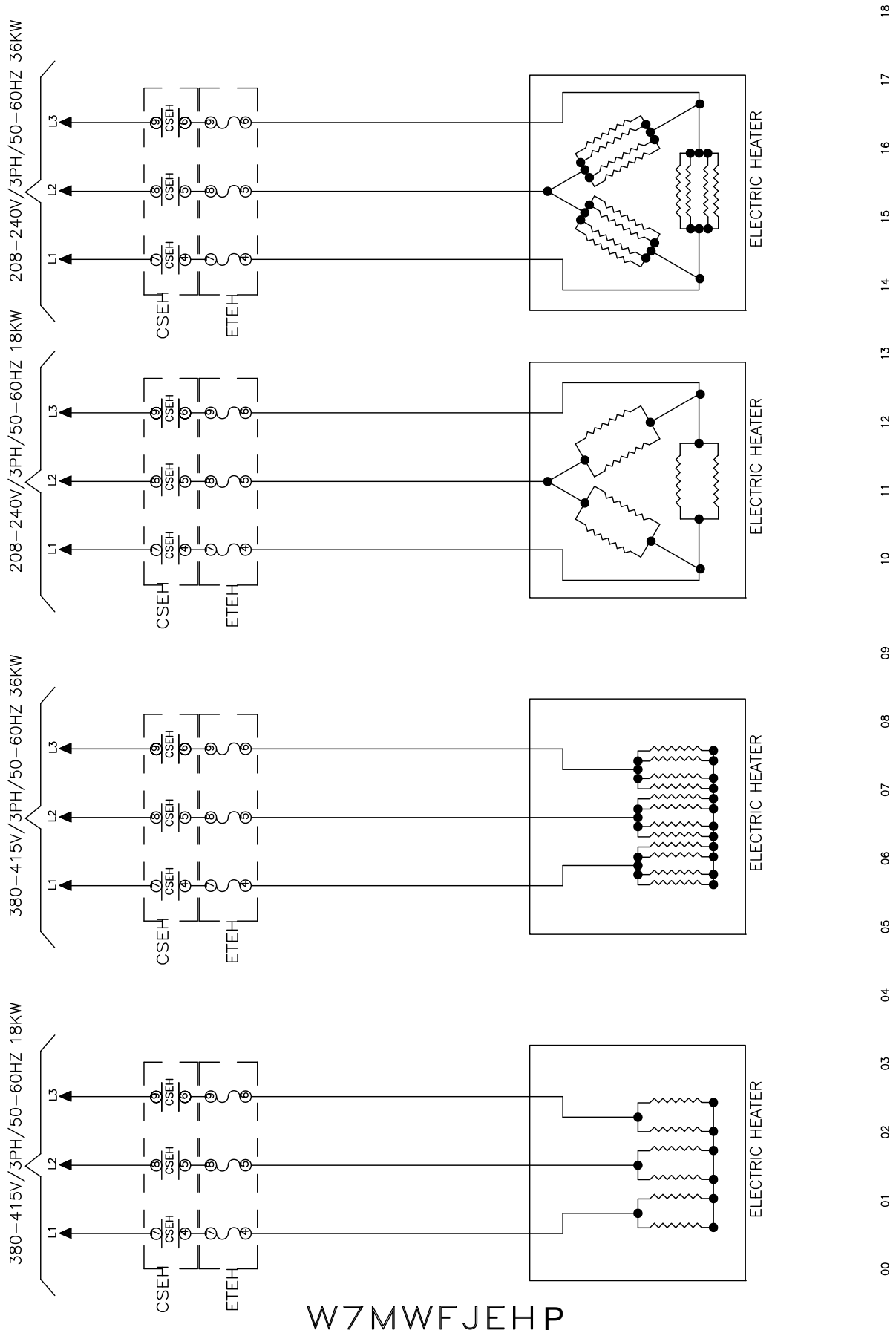

W7MWFJEHP

PELLERIN MILNOR CORPORATION

electric heat

aquecimento elétrico

2017314A

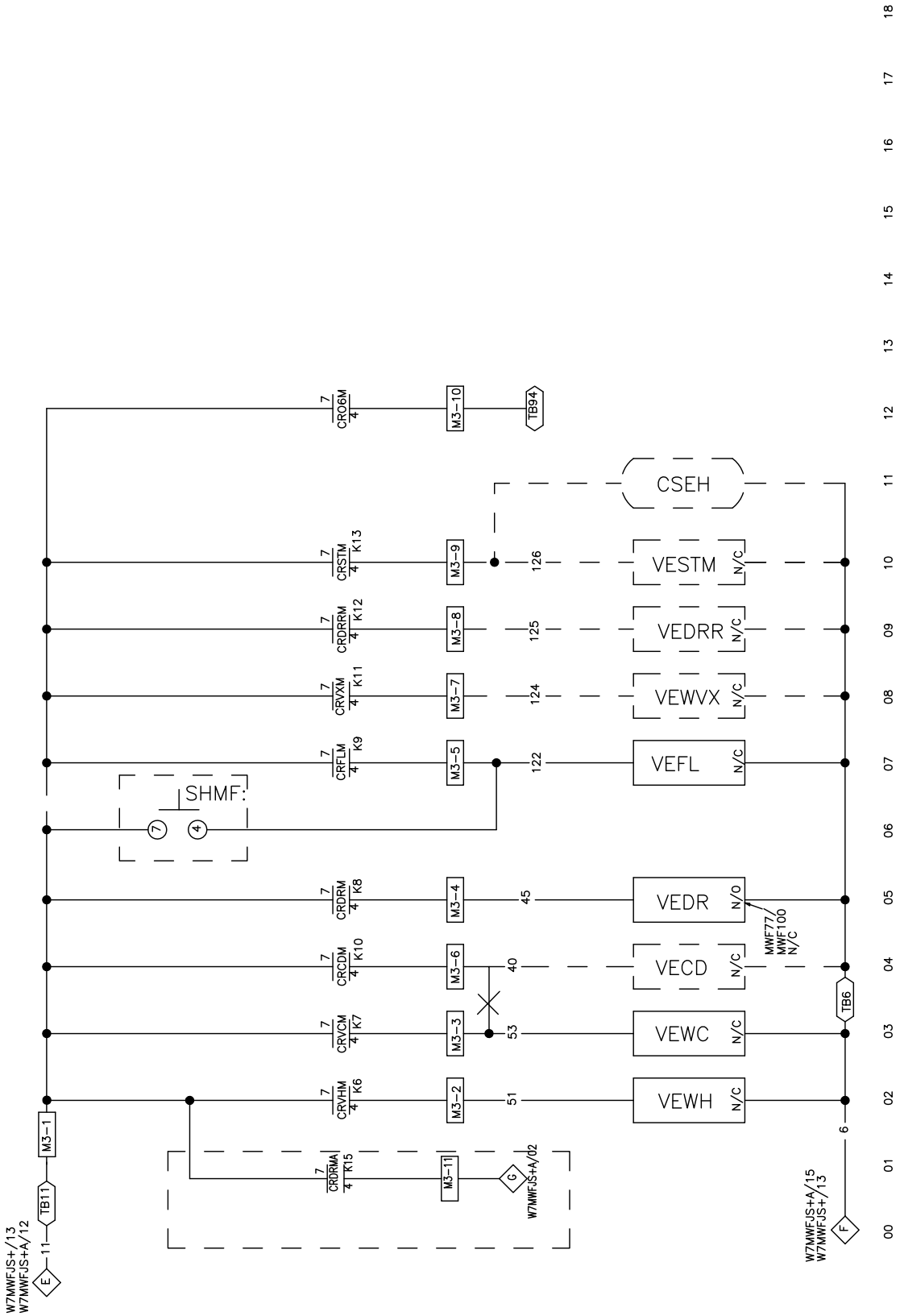

W7MWFJEVP

PELLERIN MILNOR CORPORATION

electric valves
V á lvulas el é tricas

2017314A

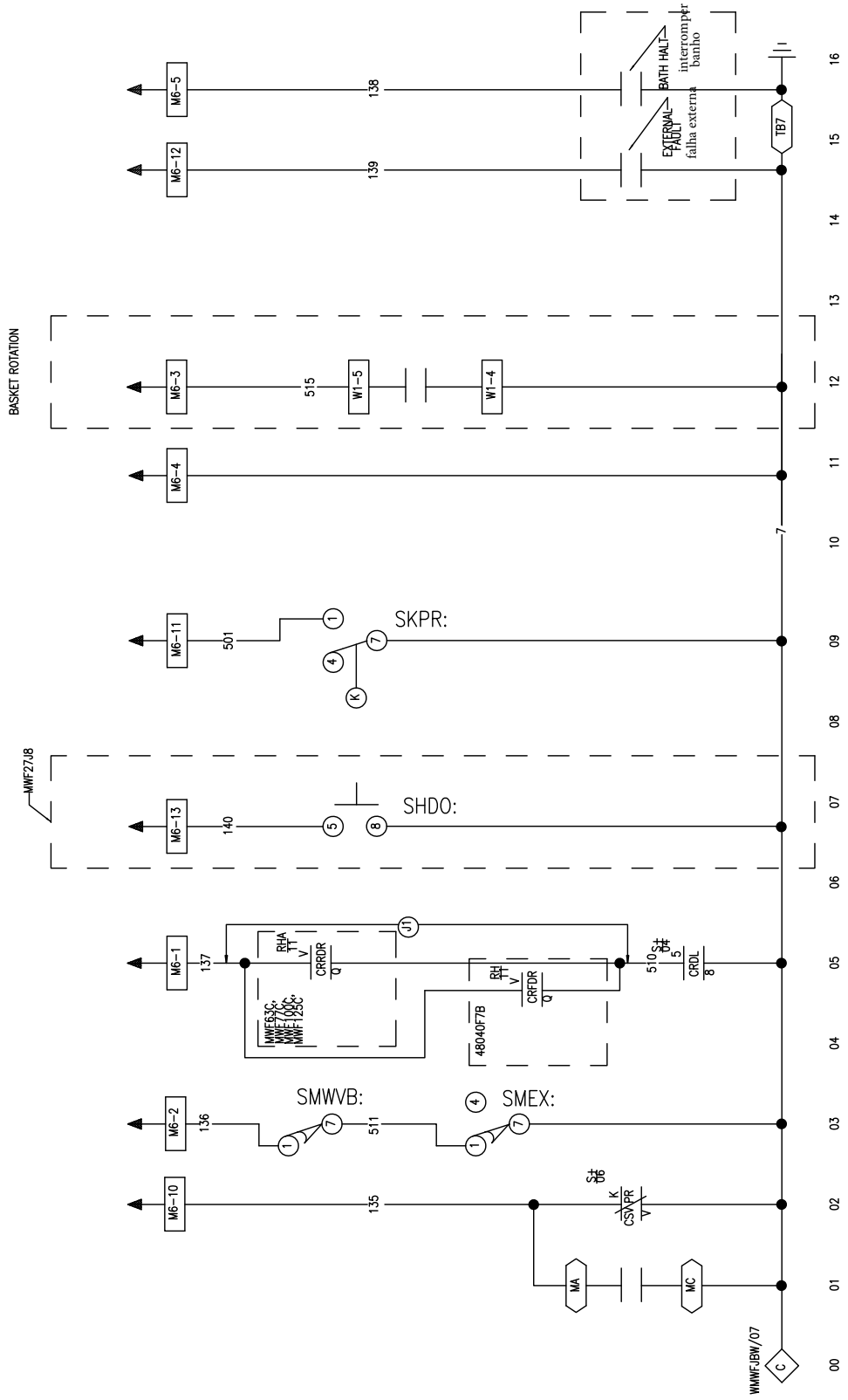

W7MWFJIAP

PELLERIN MILNOR CORPORATION

2020394B

microprocessor inputs
Entradas de microprocessador

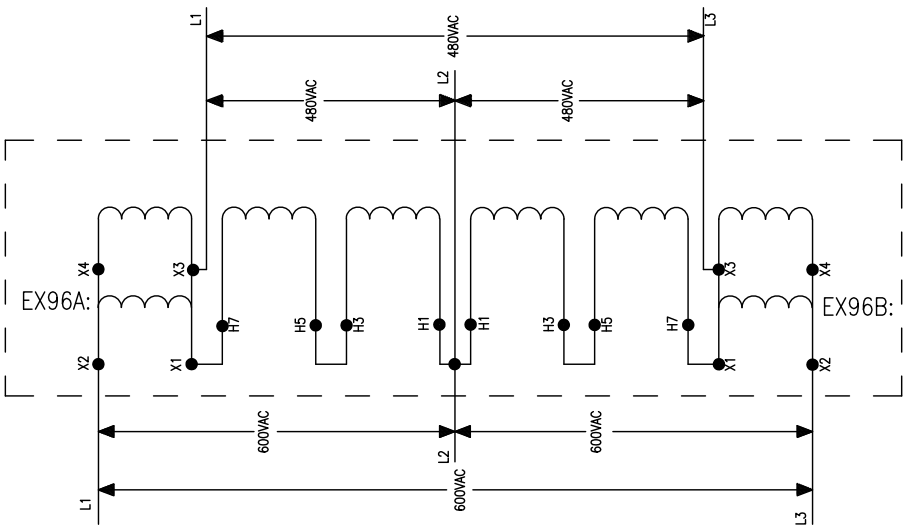

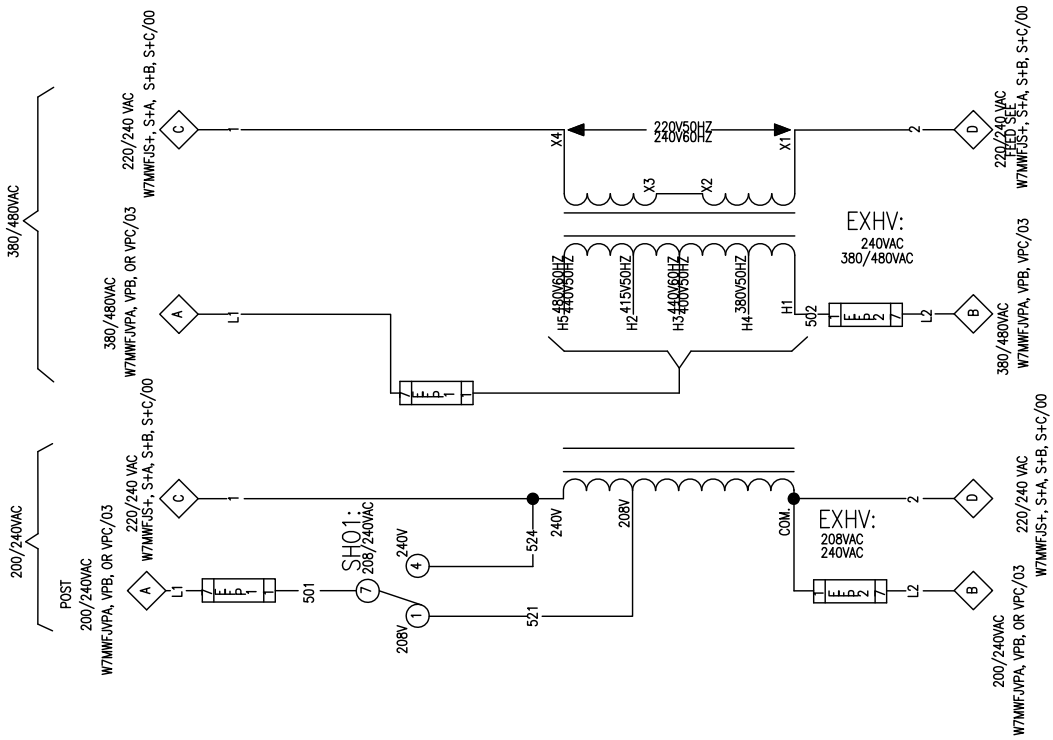

W7MWFJLVP

PELLERIN MILNOR CORPORATION

control transformers
transformador de controle

2017314B

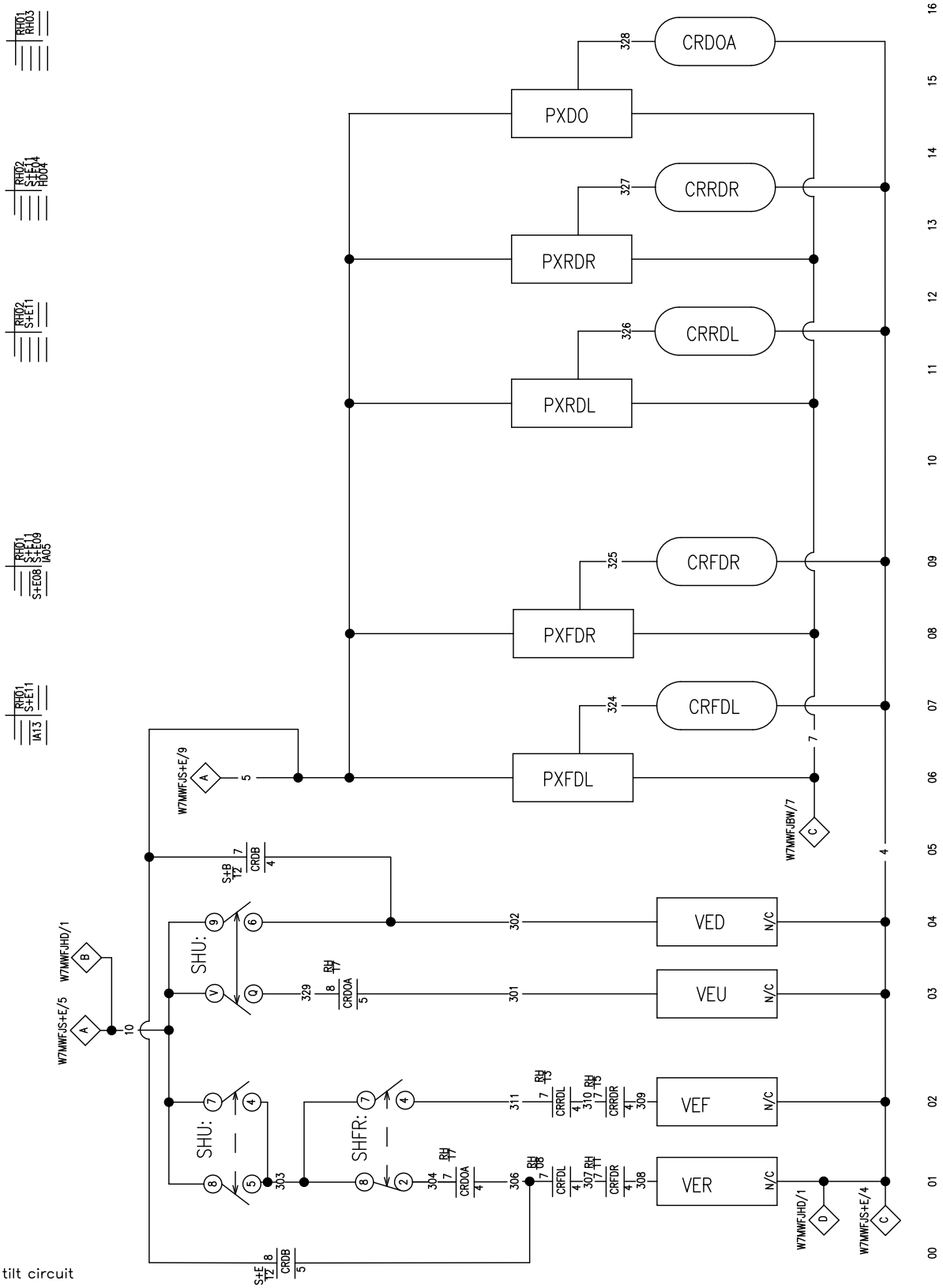

48040F7B tilt circuit

circuito de inclinação

W7MWFJRHP

PELLERIN MILNOR CORPORATION

2020394A

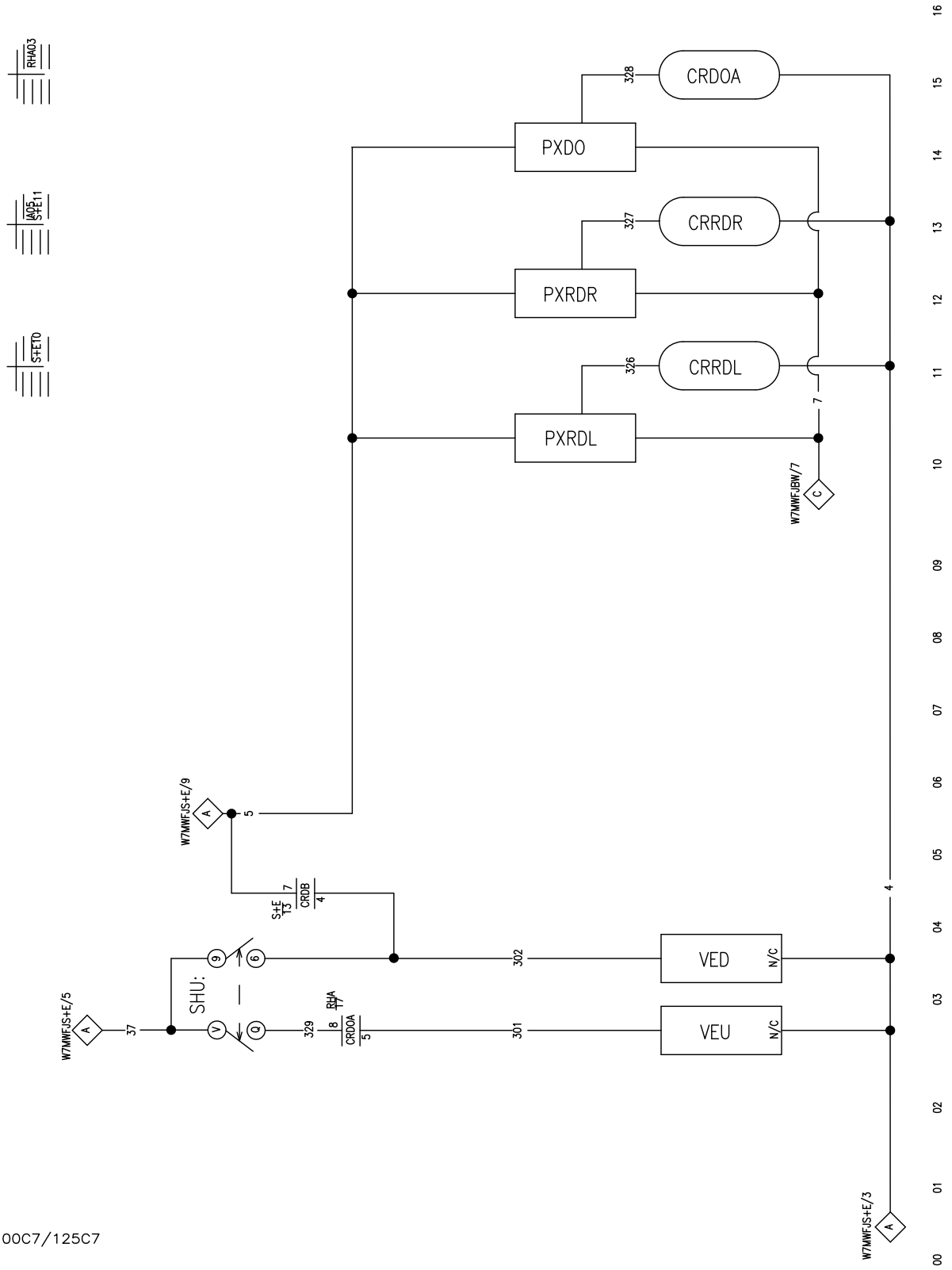

MWF63/77/100C7/125C7
tilt circuit
circuito de inclinação

W7MWFJRHAP

PELLERIN MILNOR CORPORATION

2020394A

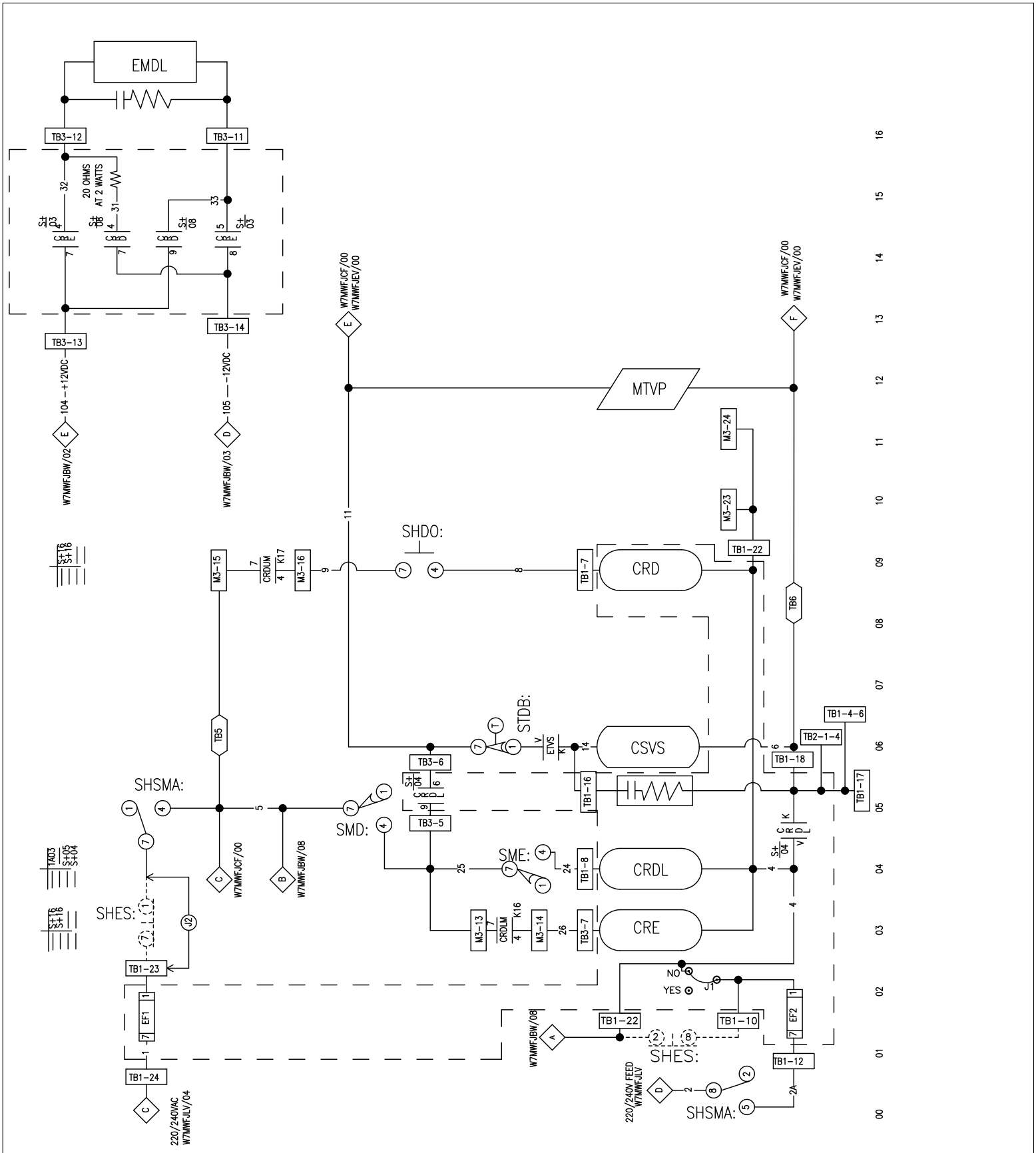

W7MWFJS+X

PELLERIN MILNOR CORPORATION

MWF27J8
start circuit
启动电路
circuito inicial

2025104B

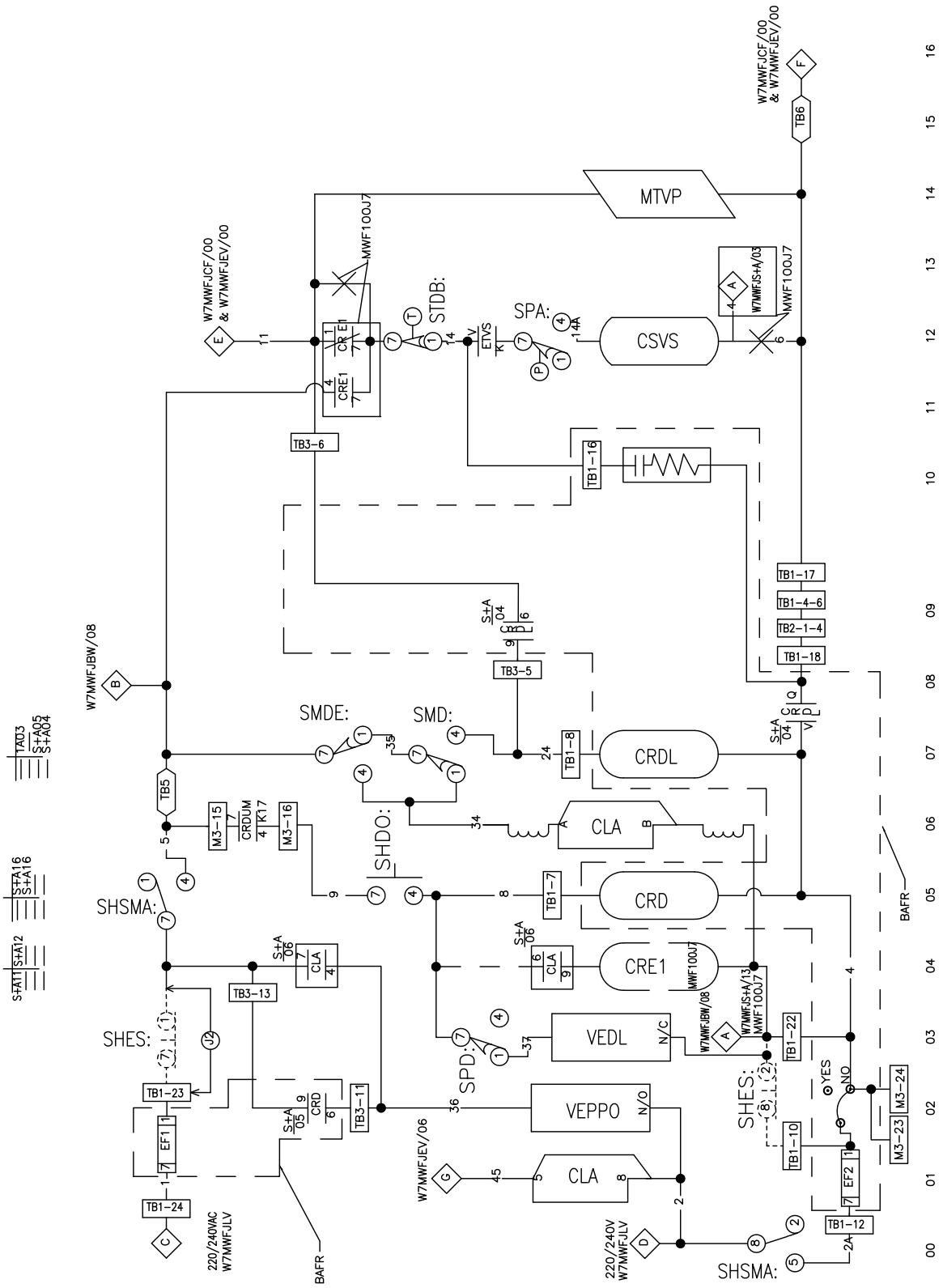

W7MWFJS+AP

MWF45, 63, 77 &100J7
start circuit
Circuito de partida

PELLERIN MILNOR CORPORATION

2016432A

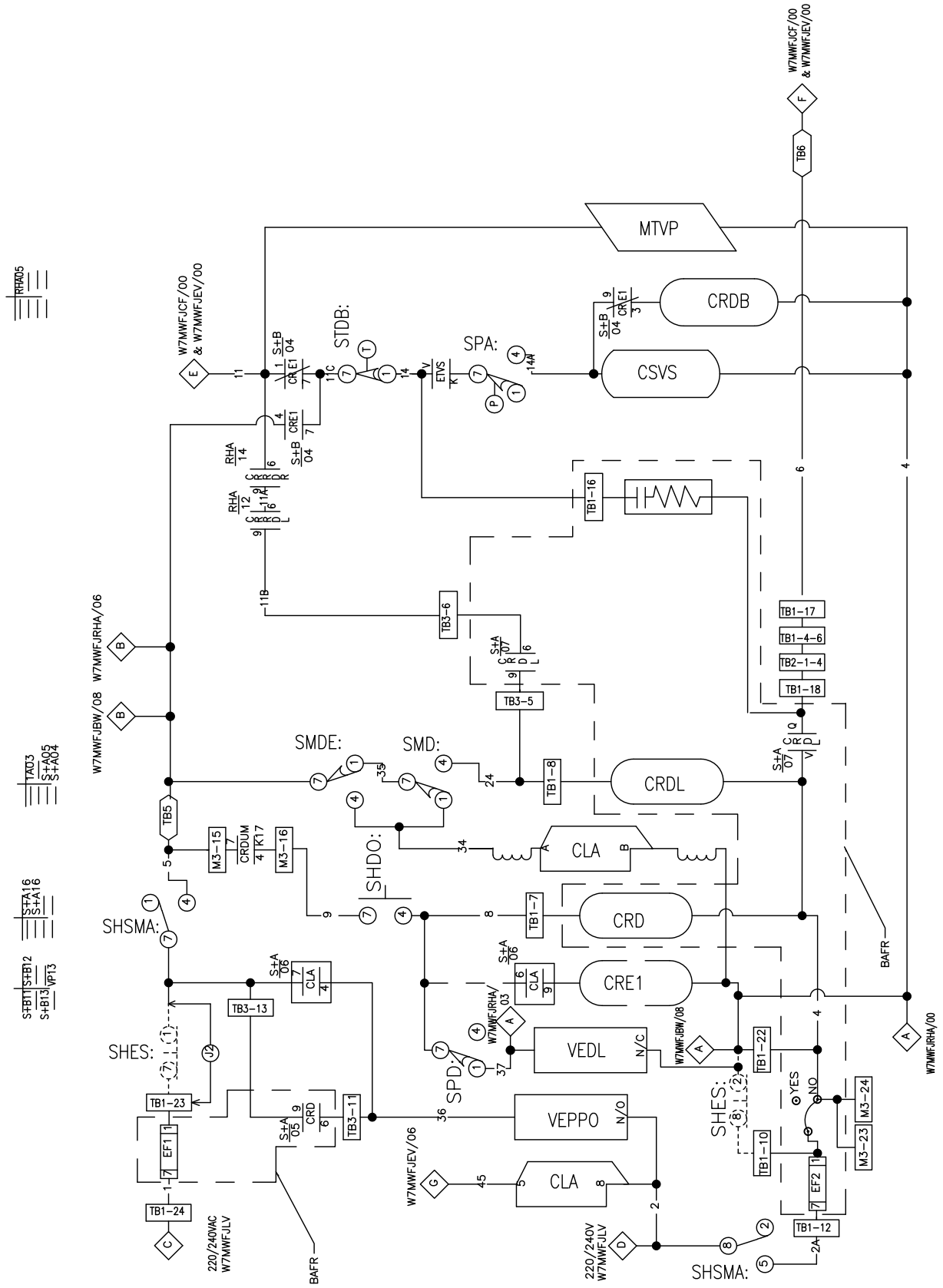

W7MWFJS+BP

MWF63C7, 77C7 &100C7
start circuit
Circuito de partida

PELLERIN MILNOR CORPORATION

2020394A

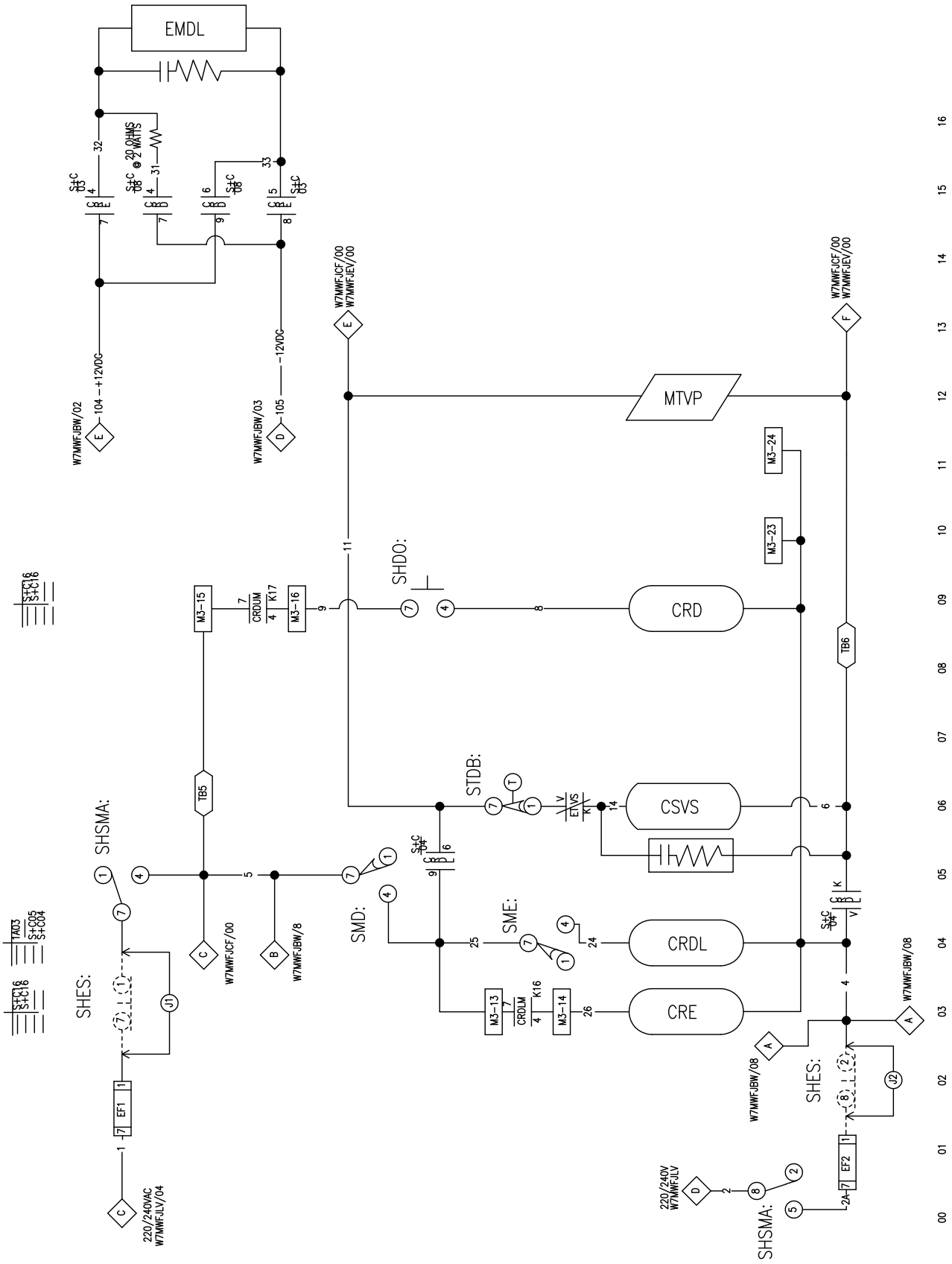

W7MWFJS+CX

MWF18/27J8 No Fuse Board
start circuit

启动电路无保险丝板

iniciar circuito sem placa de fus í veis

PELLERIN MILNOR CORPORATION

2025104A

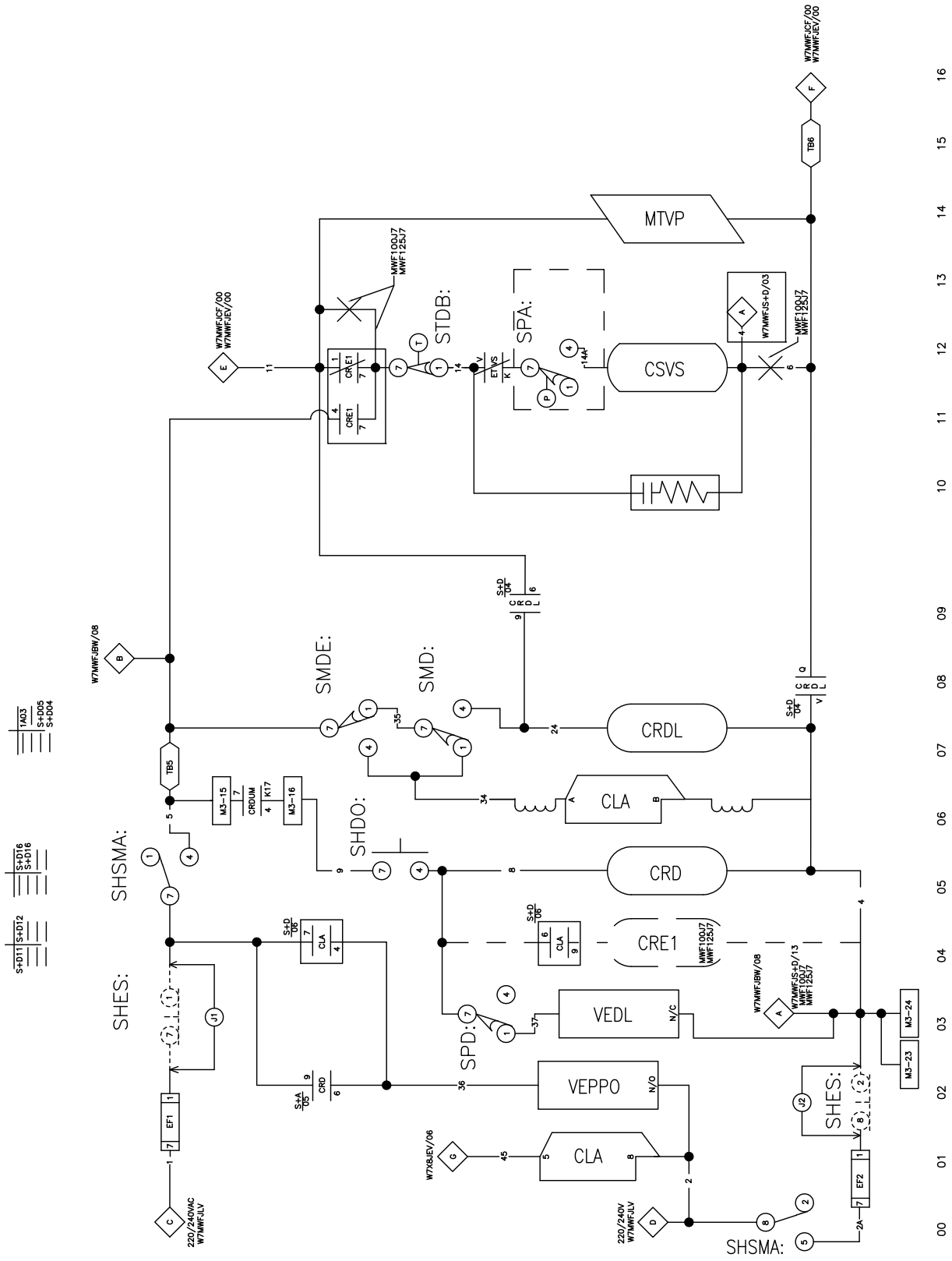

W7MWFJS+DP

MWF45, 63, 77,100J7 & 125J7
No Fuse Board
start circuit
Circuito de partida

PELLERIN MILNOR CORPORATION

2020394A

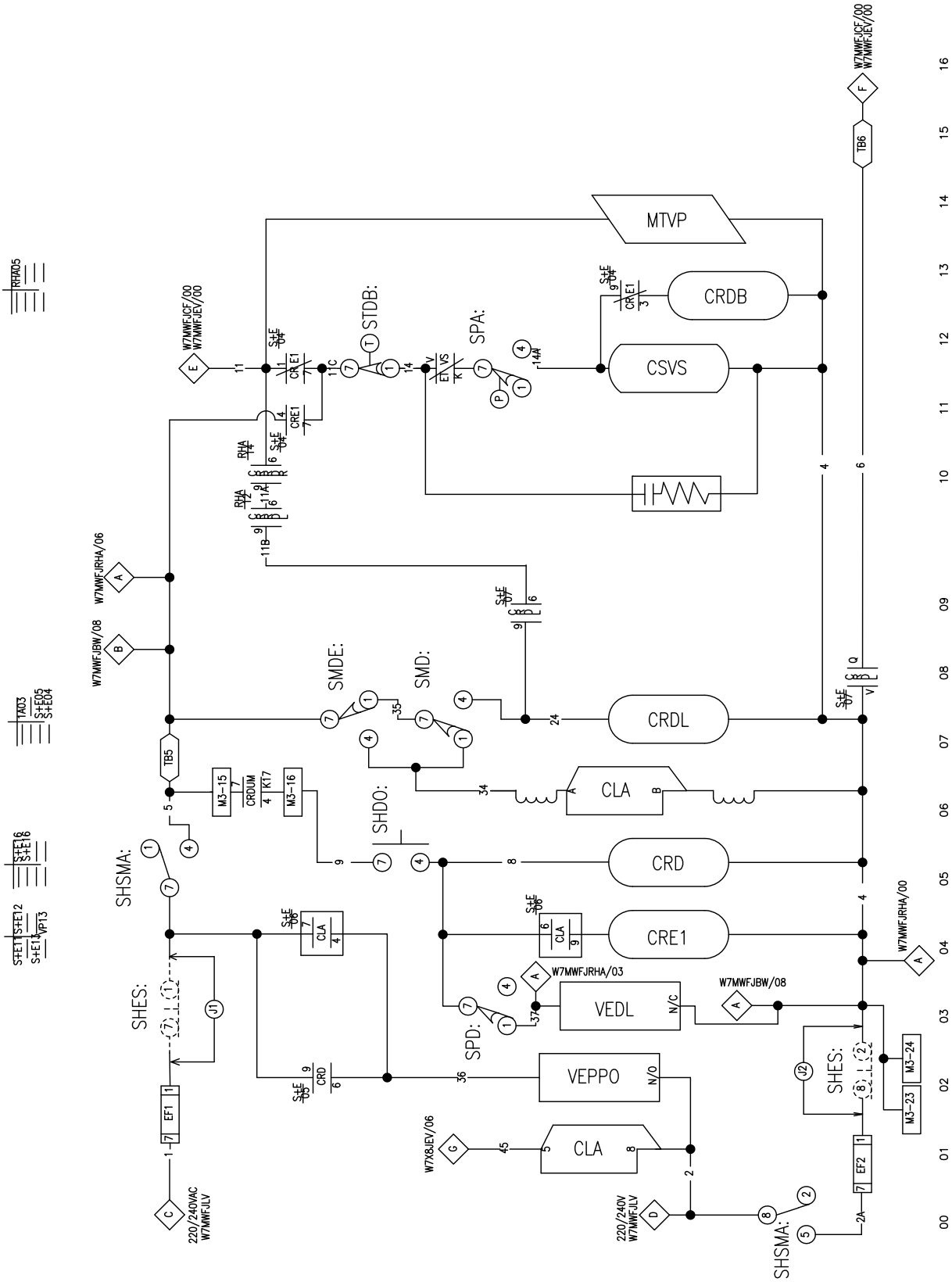

W7MWFJS+EP

PELLERIN MILNOR CORPORATION

MWF63, 77, 100 & 125C7
start circuit
Circuito de partida

2020394A

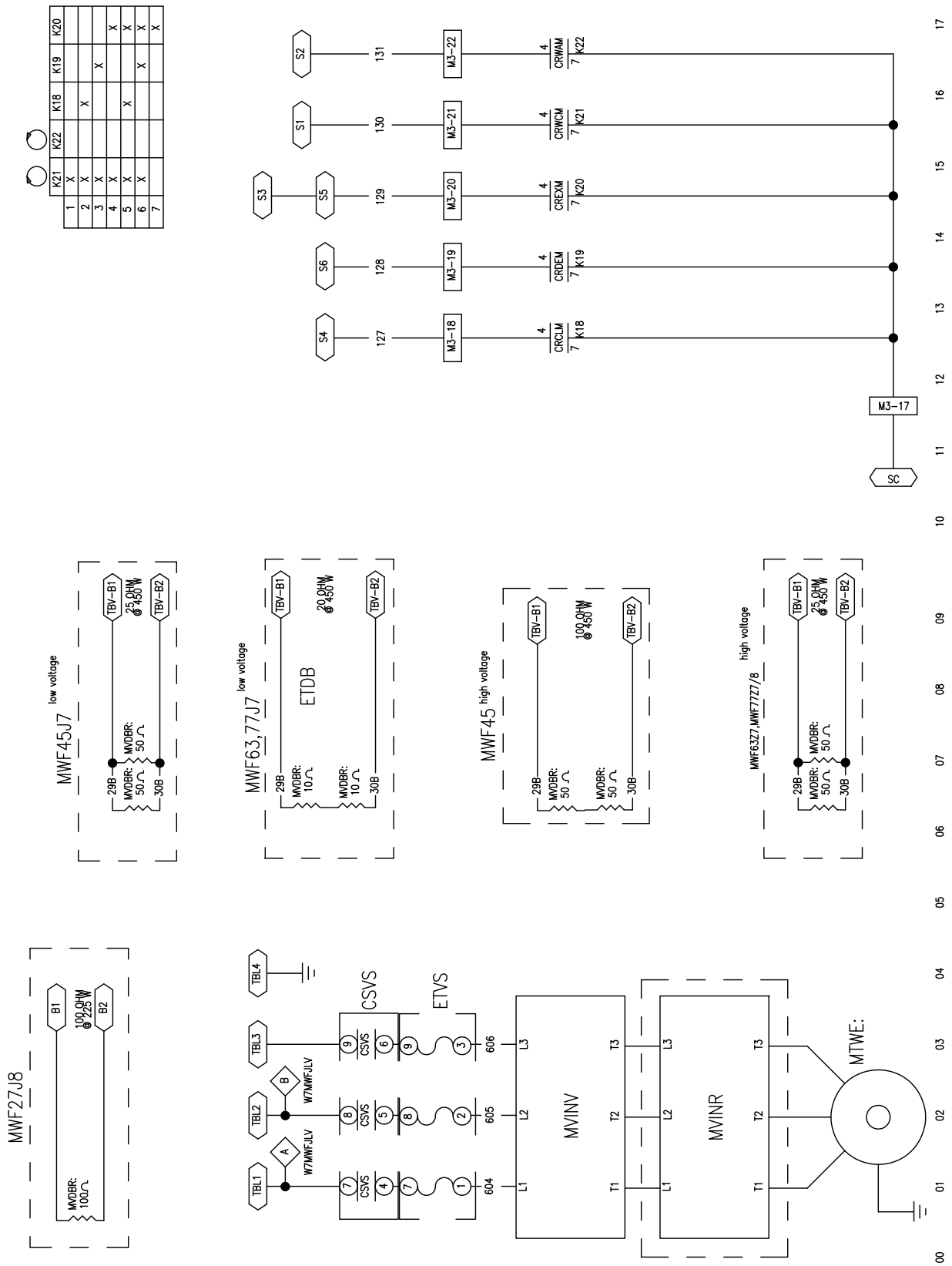

W7MWFJVPAP

MWF18–77
speed controller
controlador de velocidade

PELLERIN MILNOR CORPORATION

2021072A

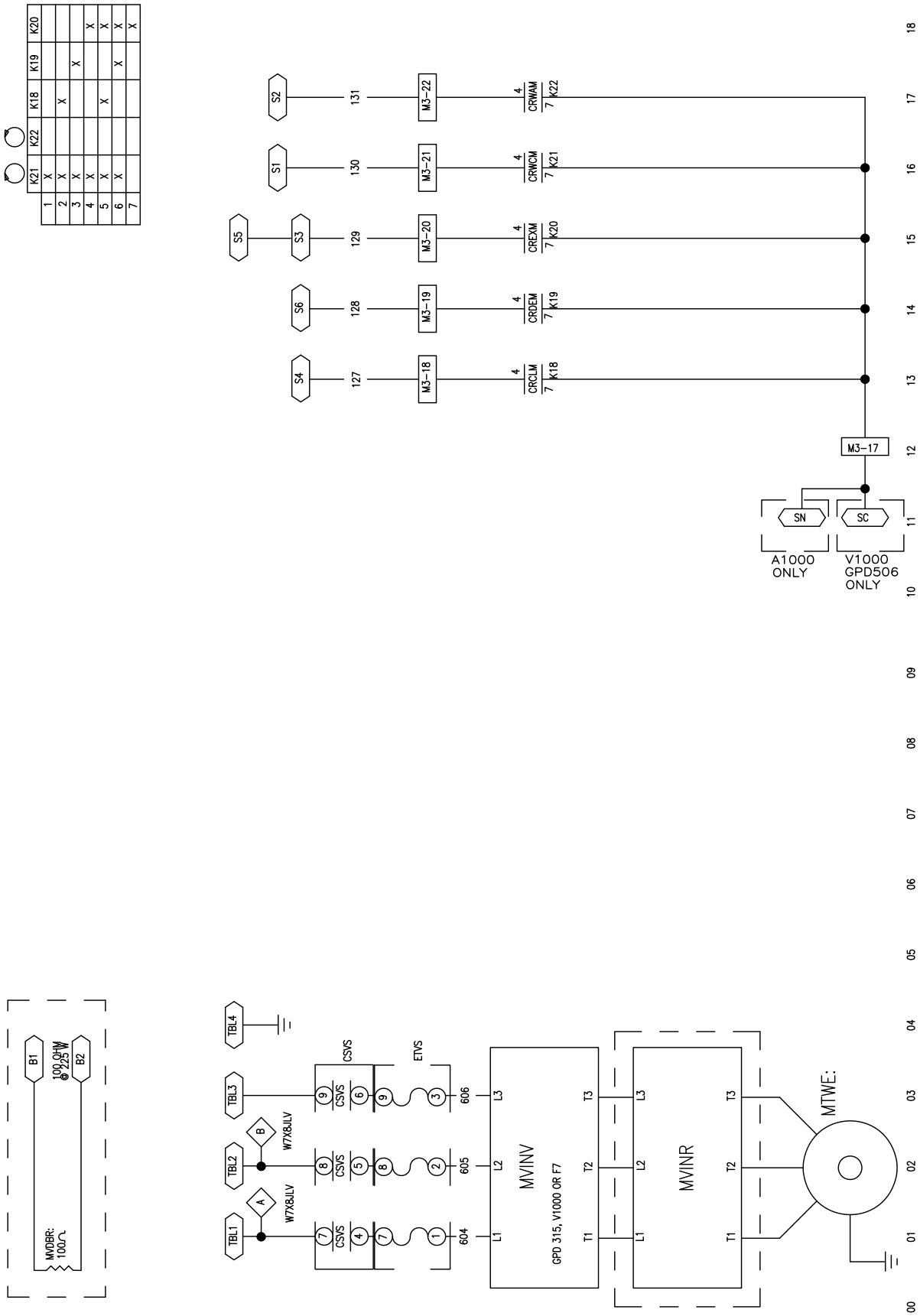

W7MWFJVPBP

PELLERIN MILNOR CORPORATION

MWF27,45,63,77J7,1PH
speed controller
controlador de velocidade

2020424A

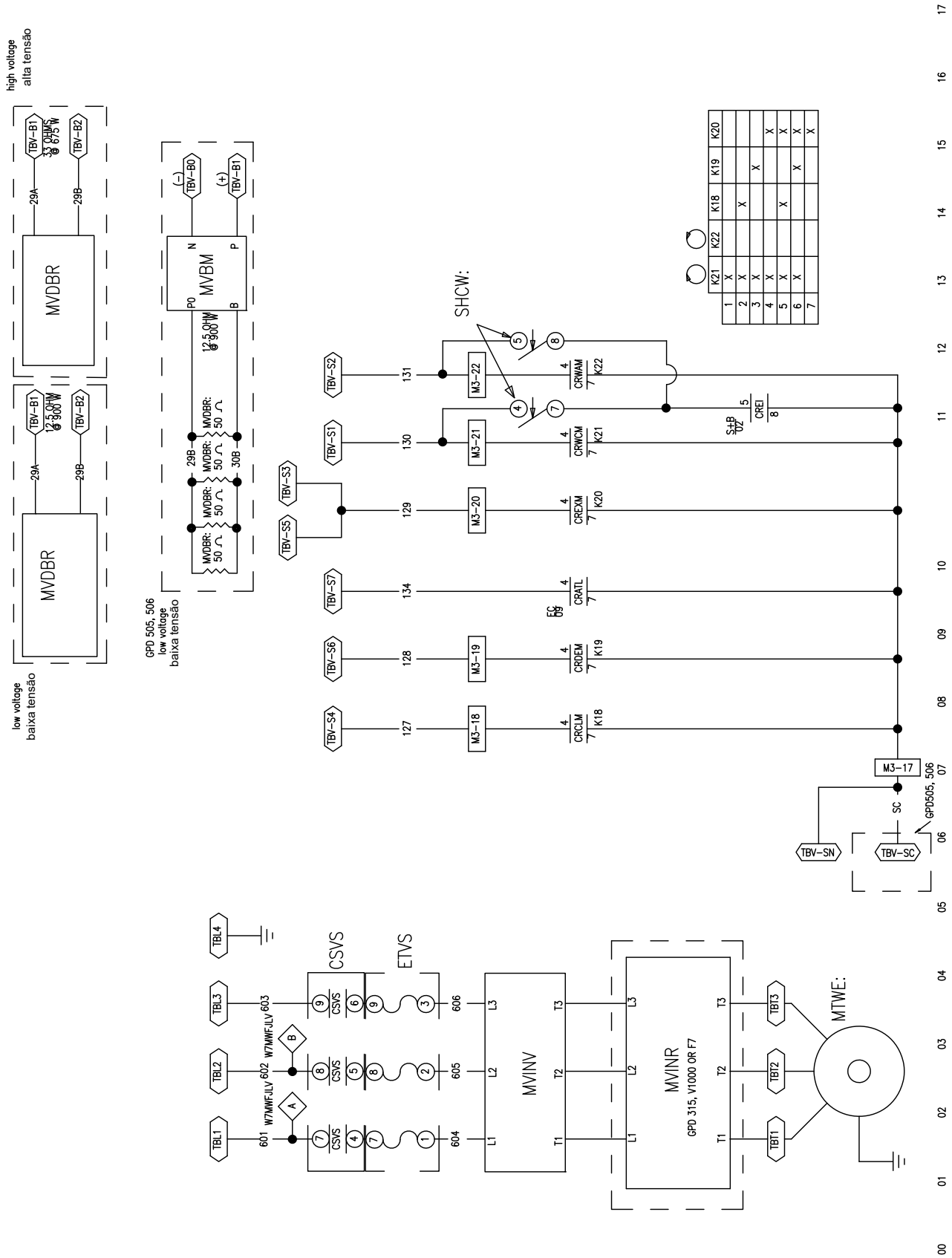

W7MWFJVPCP

MWF63C7, MWF77C7, MWF100J7/C7, MWF125J7/C7
speed controller
controlador de velocidade

PELLERIN MILNOR CORPORATION

2020424A