Published Manual Number/ECN: MC7MWFZ1AX/2025104A

- **Publishing System: TPAS2**
- **Access date: 04/29/2025**
- **Document ECNs: NOT latest**

MWF18, 27, 45Z8, 63, 77, 100Z7, Y7, 48040F7Z/D

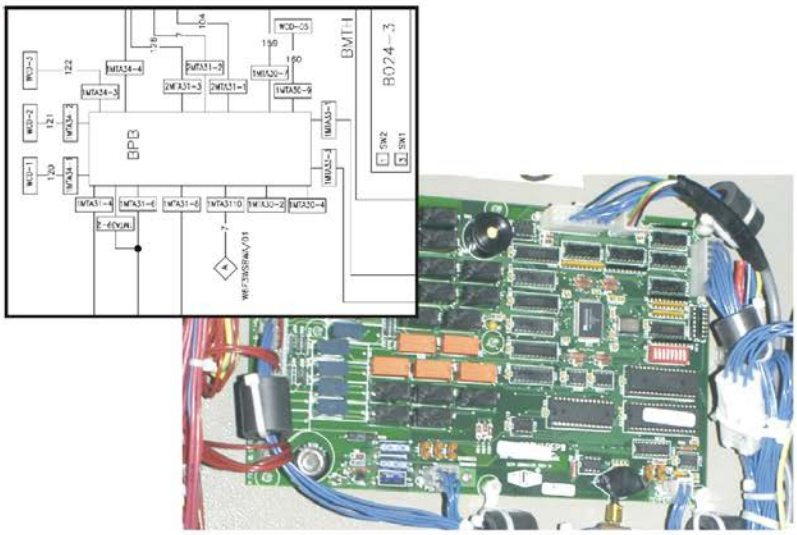

PELLERIN MILNOR CORPORATION POST OFFICE BOX 400, KENNER, LOUISIANA 70063-0400, U.S.A.

MC7MWFZ1AX/25104A

1	**English / 中国的**	
2	Text information / 文本信息	WX2011004CH/2014334A
3	Safety / 安全	WX2011003CH/2014334A
4	Repair parts / 维修配件	WX2011001CH/2014334A
5	Parts List / 零件清单	W7X8ZPLC/2023014N
10	Legend of Symbols / 常用符号表	WX2011002CH/2014334A
16	board wiring / 板接线	W7X8ZBWC/2021034A
17	flushing supplies / 冲洗用品	W7X8ZCFC/2023052A
18	12 chemical flushing / 12 化学冲洗	W7X8ZCMC/2013133A
19	extract speed limit control / 甩干极限速度控制	W7X8ZECC/2023014A
20	electric heat / 电加热	W7X8ZEHC/2013133A
21	electric valves / 电磁阀	W7X8ZEVC/2013133A
22	48040F7D electric valves / 电磁阀	W7X8ZEVAC/2013133A
23	hydraulic door / 液压门	W7X8ZHDC/2019034A
24	microprocessor inputs / 处理器输入	W7X8ZIAC/2023052A
25	control transformer / 控制变压器	W7X8ZLVC/2021073A
26	48040F7D tilt circuit / 倾斜电路	W7X8ZRHC/2020392A
27	MWF63,77,100,125Y7 tilt circuit / 倾斜电路	W7X8ZRHAC/2020392A
28	MWF27Z8 start circuit / 启动电路 /Circuito de partida	W7X8ZS+X/2025104A
29	MWF45Z8, 63/77/100Z/Y7 start circuit / 启动电路	W7X8ZS+AC/2019034A
30	48040F7D start circuit / 启动电路	W7X8ZS+BC/2019034B
31	48040F7Z start circuit / 启动电路	W7X8ZS+CC/2020392B
32	MWF18/27Z8 start circuit, no fuse board/ 启动电路无保险丝板 / iniciar circuito sem placa de fusíveis	W7X8ZS+DX/2025104A
33	MWF45Z8, MWF63Z7, 77Z/Y7, 100Z/Y7, 125Z/Y7 start circuit-no fuse board/ 启动电路	W7X8ZS+EC/2020392A
34	MWF18/27/45Z8, 63/77ZY7 inverter / 变频器/ inversor	W7X8ZVPAX/2024473A
35	MWF100Z7,48040F7D/Z inverter / 变频器	W7X8ZVPBC/2021332A
37	**English/Português**	
38	Text information / Informações em texto	WX2011004PT/2014484A
39	Safety / Segurança	WX2011003PT/2014484A
40	Repair parts / Peças de manutenção	WX2011001PT/2014484A
41	Parts List / Lista de peças	W7X8ZPLP/2023014N
46	Legend of Symbols / Legenda dos símbolos	WX2011002PT/2014484A
54	board wiring / Fiação da placa	W7X8ZBWP/2021034A
55	flushing supplies / Materiais para lavagem	W7X8ZCFP/2023052A
56	12 chemical flushing / 12 produtos químicos	W7X8ZCMP/2013133A
57	extract speed limit control / controle de limite da velocidade de extração	W7X8ZECP/2023014A

MC7MWFZ1AX/25104A

58	electric heat / aquecimento elétrico	W7X8ZEHP/2013133A
59	electric valves / Válvulas elétricas	W7X8ZEVP/2013133A
60	48040F7D electric valves / Válvulas elétricas	W7X8ZEVAP/2013133A
61	hydraulic door / porta hidráulica	W7X8ZHDP/2019034A
62	microprocessor inputs / Entradas de microprocessador	W7X8ZIAP/2023052A
63	control transformer / transformador de controle	W7X8ZLVP/2021073A
64	48040F7D tilt circuit / circuito de inclinação	W7X8ZRHP/2020392A
65	MWF63,77,100,125Y7 tilt circuit / circuito de inclinação	W7X8ZRHAP/2020392A
66	MWF27Z8 start circuit / 启动电路 /Circuito de partida	W7X8ZS+X/2025104A
67	MWF45Z8, 63/77/100Z/Y7 start circuit / Circuito de partida	W7X8ZS+AP/2019034A
68	48040F7D start circuit / Circuito de partida	W7X8ZS+BP/2019034B
69	48040F7Z start circuit / Circuito de partida	W7X8ZS+CP/2020392B
70	MWF18/27Z8 start circuit, no fuse board/ 启动电路无保险丝板 / iniciar circuito sem placa de fusíveis	W7X8ZS+DX/2025104A
71	MWF45Z8, MWF63Z7, 77Z/Y7, 100Z/Y7, 125Z/Y7 start circuit-no fuse board/ Circuito de partida	W7X8ZS+EP/2020392A
72	MWF18/27/45Z8, 63/77ZY7 inverter / 变频器/ inversor	W7X8ZVPAX/2024473A
73	MWF100Z/Y7, MWF125Z/Y7, 48040F7D/Z inverter / inversor	W7X8ZVPBP/2021332A

English / 中国的 1

The text in this Circuit Guide is provided in the following languages:

1. **English**
2. Chinese

這個電路指南中的文字以下語言提供：

1. 英語
2. 中文

Read the separate safety manual before installing, operating, or servicing

阅读单独的安全手册在安装，操作或维修前

How to Get the Necessary Repair Components

You can get components to repair your machine from the approved supplier where you got this machine. Your supplier will usually have the necessary components in stock. You can also get components from the Milnor® factory.

Tell the supplier the machine model and serial number and this data for each necessary component:

- The component number from this manual
- The component name if known
- The necessary quantity
- The necessary transportation requirements
- The schematic number
- If the component is a motor or electrical control, give the nameplate data from the used component.

To write the Milnor factory:

Pellerin Milnor Corporation
Post Office Box 400
Kenner, LA 70063-0400
United States

Telephone: 504-467-2787
Fax: 504-469-9777
Email: parts@milnor.com

如何获取必要的维修组件

您可以从您购买机器的授权供应商处获取组件以维修您的设备。您的供应商通常会在库存中存有必要的组件。您还可以从美国美罗 (Milnor)工厂获取组件。

如需获得某一组件，请告知供应商对应的机器型号、序列号和以下数据：

- 本手册所示的组件编号
- 组件名称，如果已知
- 所需要的数量
- 必要的运输要求
- 电路图编号
- 如果组件是电动机或电气控制元件，请提供原组件的铭牌数据。

美国美罗公司
邮箱 400
肯纳，路易斯安那州 70063-0400
美国

电话： 504-467-2787
传真： 504-469-9777
电子邮件：parts@milnor.com

MC7MWFZ1AX

AC			
ACBA	< 7-2022	W7X8ZEC	EACCLRM3
ACBA	> 7-2022	W7X8ZEC	EACCLRM8
BA			
BAFR		W7X8ZS+	08BHFRCT
BAFR		W7X8ZS+A	08BHFRCT
BAUP		W7X8ZBW	08BHA9D3T
BBAD-1		W7X8ZEC	08BSBADCTE
BIO		W7X8ZBW	08BHF120AT
BSP		W7X8ZBW	08BNDSRAT
CD			
CDDH		W7X8ZHD	09CF001071
CL			
CLA		W7X8ZS+A	09CL2C-C71
CLA		W7X8ZS+B	09CL2C-C71
CLA		W7X8ZS+C	09CL2C-C71
CLA-CHOKE		W7X8ZS+A	10YCLCHOKE
CLA-CHOKE		W7X8ZS+B	10YCLCHOKE
CLA-CHOKE		W7X8ZS+C	10YCLCHOKE
CP			
CPSP		W7X8ZBW	09RPE013Q
CR			
CRA		W7X8ZS+B	09C024D71
CRA		W7X8ZS+C	09C024D71
CRAD		W7X8ZVPB	09C024D71
CRC1		W7X8ZCM	09C024D71
CRC2		W7X8ZCM	09C024D71
CRC3		W7X8ZCM	09C024D71
CRC4		W7X8ZCM	09C024D71
CRC5		W7X8ZCM	09C024D71
CRC6		W7X8ZCM	09C024D71
CRD		W7X8ZS+	09C024D71
CRD		W7X8ZS+A	09C024D71
CRD		W7X8ZS+B	09C024D71
CRD		W7X8ZS+C	09C024D71
CRDB		W7X8ZS+A	09C024D71
CRDB		W7X8ZS+B	09C024D71
CRDL		W7X8ZS+	09C024D71
CRDL		W7X8ZS+A	09C024D71
CRDL		W7X8ZS+B	09C024D71
CRDL		W7X8ZS+C	09C024D71
CRDOA		W7X8ZRH	09C024D71
CRDOA		W7X8ZRHA	09C024D71
CRDRA		W7X8ZSRH	09C024D71
CRE		W7X8ZS+	09C024D71
CREI		W7X8ZS+B	09C024D71
CREI		W7X8ZS+C	09C024D71
CRFDL		W7X8ZRH	09C024D71
CRFDL		W7X8ZRH	09C024D71
CRFDR		W7X8ZRH	09C024D71

CRFDR		W7X8ZSRH	09C024D71
CRRDL		W7X8ZRH	09C024D71
CRRDL		W7X8ZRHA	09C024D71
CRRDL		W7X8ZSRH	09C024D71
CRRDR		W7X8ZRH	09C024D71
CRRDR		W7X8ZRHA	09C024D71
CRRDR		W7X8ZSRH	09C024D71
CS			
CSDO		W7X8ZHD	09MC08C371
CSVS	MWF27Z8	W7X8ZS+	98CMCR3004
CSVS	MWF45Z8	W7X8ZS+A	98CMCR3601
CSVS	MWF63-77 <350V	W7X8ZS+A	98CMCR4201
CSVS	MWF63-77 >350V	W7X8ZS+A	98CMCR4202
CSVS		W7X8ZS+B	09MC08E371
CSVS		W7X8ZS+C	09MC08E371
CSVS	MWF45,63,77	W7X8ZVPA	09MC08G371
CSVS	48040>350V	W7X8ZVPB	09MC08G371
CSVS	48040<350V	W7X8ZVPB	09MC08N371
EF			
EF1		W7X8ZS+	09FF002AMG
EF2		W7X8ZS+	09FF002AMG
EF2		W7X8ZS+A	09FF002AMG
EFP1	>250V	W7X8ZLV	09FF003AWV
EFP2	>250V	W7X8ZLV	09FF003AWV
EM			
EMDL		W7X8ZS+	09K063C24
EP1		W7X8ZS+A	09FF002AMG
ES			
ESPS		W7X8ZBW	08PSS3401T
ET			
ETVS	MWF27	W7X8ZVPA	09FTD0120T
ETVS		W7X8ZVPA	09FTD0121T
ETVS	MWF27 LV	W7X8ZVPA	98CMCR3005
ETVS	MWF45 <350V	W7X8ZVPA	98CMCR3602
ETVS	MWF45 >350V	W7X8ZVPA	98CMCR3603
ETVS	MWF63,77 <350V	W7X8ZVPA	98CMCR4203
ETVS	MWF63, 77 >350V	W7X8ZVPA	98CMCR4204
EX			
EXHV		W7X8ZLV	MESSAGE EW
EXHV-1		W7X8ZLV	98CMCR0902
EXHV-2		W7X8ZLV	09UA025AAB
EXHV-3		W7X8ZLV	09U251AB71
MOV		W7X8ZBW	08M0V0240
MT			
MTVP		W7X8ZS+A	13AF100A71
MTVP		W7X8ZS+B	13AF100A71
MTVP		W7X8ZS+C	13AF100A71
MTWE		W7X8ZVPA	MESSAGE SO
MTWE		W7X8ZVPB	MESSAGE SO
MV			

MVDBR		W7X8ZVPA	09MV100RET
MVDBR		W7X8ZVPB	09MV050REV
MVFLT		W7X8ZVPA	09MVFILTR1
MVFLT		W7X8ZVPB	09MVFILTR1
MVINR-H		W7X8ZVPA	09MX100A96
MVINR-H		W7X8ZVPA	09MX250A96
MVINR-H		W7X8ZVPB	09MX400A96
MVINR-L		W7X8ZVPA	09MX100A74
MVINR-L		W7X8ZVPA	09MX200A74
MVINR-L		W7X8ZVPB	09MX600A96
MVINV-H		W7X8ZVPA	09MWB00996
MVINV-H		W7X8ZVPA	09MWB01896
MVINV-H		W7X8ZVPA	09MWB02496
MVINV-H		W7X8ZVPB	09MWC03996
MVINV-L		W7X8ZVPA	09MWB01774
MVINV-L		W7X8ZVPA	09MWB03374
MVINV-L		W7X8ZVPA	09MWB04774
MVINV-L		W7X8ZVPB	09MWC07574
PX			
PXDO		W7X8ZRH	09RPS18CAS
PXDO		W7X8ZRHA	09RPS18CAS
PXFDL		W7X8ZRH	09RPS12AAS
PXFDL		W7X8ZRHA	09RPS12AAS
PXFDR		W7X8ZRH	09RPS12AAS
PXRDL		W7X8ZRH	09RPS12AAS
PXRDR		W7X8ZRH	09RPS12AAS
PXRDR		W7X8ZRHA	09RPS12AAS
RS01		W7X8ZBW	09AR16R25
SH			
SH01		W7X8ZLV	09N050
SHCW		W7X8ZVPB	09N405M320
SHDO		W7X8ZIA	09N405PB10
SHDO		W7X8ZS+	09N405PB10
SHDO		W7X8ZS+A	09N405PB10
SHDO		W7X8ZS+B	09N405PB10
SHDO		W7X8ZS+C	09N405PB10
SHES		W7X8ZS+	09N508A
SHES		W7X8ZS+A	09N508A
SHES		W7X8ZS+B	09N508A
SHES		W7X8ZS+C	09N508A
SHFR		W7X8ZRH	09N405M320
SHMF		W7X8ZEV	09N405PB10
SHMF		W7X8ZEVA	09N405PB10
SHSMA		W7X8ZS+	09N405M220
SHSMA		W7X8ZS+A	09N405M220
SHSMA		W7X8ZS+B	09N405M220
SHSMA		W7X8ZS+C	09N405M220
SHU		W7X8ZRH	09N405S320
SHU		W7X8ZRHA	09N405S320
SHWD		W7X8ZIA	09N405M210

SHWDO		W7X8ZHD	09N405S320
SHWDO		W7X8ZS+B	09N405S320
SK			
SKPR		W7X8ZIA	09N127C
SM			
SMD		W7X8ZS+	02 04177
SMD		W7X8ZS+A	09R014A
SMD		W7X8ZS+B	09R014A
SMD		W7X8ZS+C	09R014A
SMDE		W7X8ZS+A	09R012
SMDE		W7X8ZS+B	09R012
SMDE		W7X8ZS+C	09R012
SME		W7X8ZS+	09R010D
SMEX		W7X8ZIA	09R008ASTD
SMWVB		W7X8ZIA	SAE03 151
SP			
SPA		W7X8ZS+A	09N082A
SPBP		W7X8ZIA	09N082B05
SPBS		W7X8ZIA	09N082A
SPD		W7X8ZS+A	09N082B10
SPD		W7X8ZS+B	09N082B10
SPD		W7X8ZS+C	09N082B10
ST			
STDB		W7X8ZS+	30RA175T
STDB		W7X8ZS+A	30RA175T
STDB		W7X8ZS+B	30RA175T
STDB		W7X8ZS+C	30RA175T
TP1		W7X8ZBW	30R0043P
VE			
VEBP		W7X8ZS+A	96TBC2BA71
VEBP		W7X8ZS+B	96TBC2BA71
VEBP		W7X8ZS+C	96TBC2BA71
VEBR		W7X8ZS+A	96R301B71
VEBR		W7X8ZS+B	96R301B71
VEBR		W7X8ZS+C	96R301B71
VEC1		W7X8ZCF	--
VEC2		W7X8ZCF	--
VEC3		W7X8ZCF	--
VEC4		W7X8ZCF	--
VEC5		W7X8ZCF	--
VEC6		W7X8ZCF	--
VEC7		W7X8ZCF	--
VEC8		W7X8ZCF	--
VECD		W7X8ZEV	96P057A71
VECD		W7X8ZEV	96P056A71
VECD		W7X8ZEV	96P152A71
VECD		W7X8ZEV	96R301B71
VECD		W7X8ZEVA	96R301B71
VED		W7X8ZRH	96R301B71
VED		W7X8ZRHA	96R301B71

VEDL		W7X8ZS+A	98CMCR3001
VEDL		W7X8ZS+B	96R301B71
VEDL		W7X8ZS+C	96R301B71
VEDR		W7X8ZEV	96D350A71
VEDR		W7X8ZEV	96R301B71
VEDR		W7X8ZEVA	96R301B71
VEDRR		W7X8ZEV	96D350B71
VEDRR		W7X8ZEV	96R301B71
VEDRR		W7X8ZEVA	96R301B71
VEF		W7X8ZRH	96R301B71
VEFL		W7X8ZEV	96P057A71
VEFL		W7X8ZEV	96P056A71
VEFL		W7X8ZEVA	96R301B71
VEFL		W7X8ZEVA	96R301B71
VEFLS		W7X8ZEV	96P013G71
VEFLS		W7X8ZEVA	96P013G71
VEHDC		W7X8ZHD	96RH706E71
VEHDL		W7X8ZS+B	96R301B71
VEHDO		W7X8ZHD	96RH706E71
VEPPO		W7X8ZS+A	98CMCR3002
VEPPO		W7X8ZS+B	96R302B71
VEPPO		W7X8ZS+C	96R302B71
VESTM		W7X8ZEV	98CMCR3001
VESTM		W7X8ZEV	96R301B71
VESTM		W7X8ZEVA	96R301B71
VEU		W7X8ZRH	96R301B71
VEU		W7X8ZRHA	96R301B71
VEWC		W7X8ZEV	96P057A71
VEWC		W7X8ZEV	98CMCR3001
VEWC		W7X8ZEV	98CMCR3001
VEWC		W7X8ZEV	96R301B71
VEWC		W7X8ZEV	98CMCR3001
VEWC		W7X8ZEV	98CMCR3001
VEWC		W7X8ZEVA	96R301B71
VEWH		W7X8ZEV	96P057A71
VEWH		W7X8ZEV	96R301B71
VEWH		W7X8ZEVA	96R301B71
VEWVX		W7X8ZEV	96P057A71
VEWVX		W7X8ZEV	96P056A71
VEWVX		W7X8ZEV	96P152A71
VEWVX		W7X8ZEV	96R301B71
VEWVX		W7X8ZEVA	96R301B71

Legend of Symbols 常用符号表

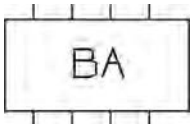

BA = Printed Circuit Board
印刷电路板

CB = Circuit Breaker
断路器

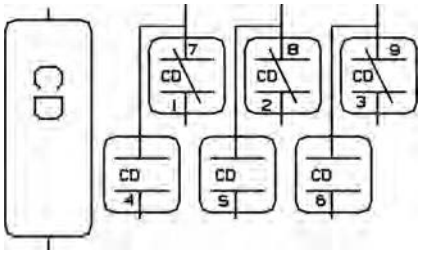

CD = Time Delay Relay
延时继电器

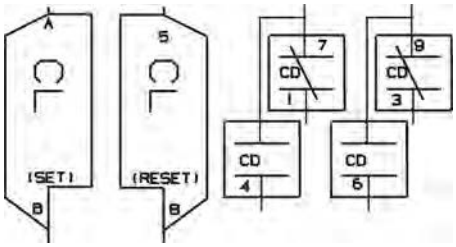

CL = Latch Relay
锁存继电器

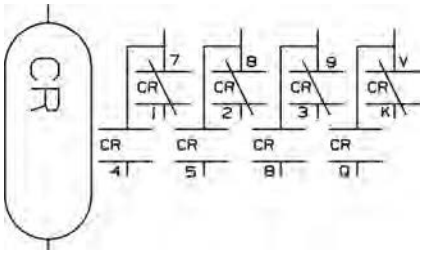

CR = Relay
继电器

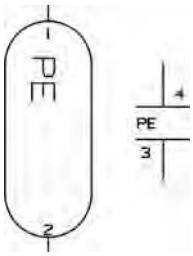

CP = Photo-Eye
光眼

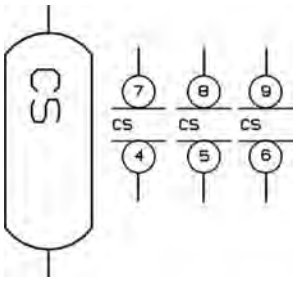

CS = Contactor/Motor Starter
接触器/电动机起动器

EB = Audible Signal
声音信号

EC = Clutch
离合器

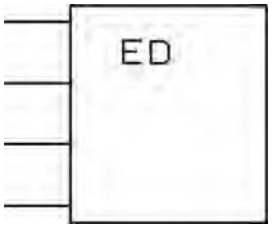

ED = Electronic Display
电子显示**屏**

EF = Fuse
保险丝

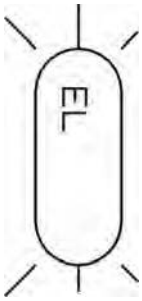

EL = Light
灯

EM = Electro Magnatic Solenoid
电磁线圈

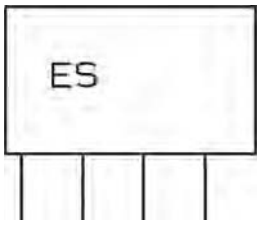

ES = Electronic Power Supply
电子电源

ET = Thermal Overload
热过载

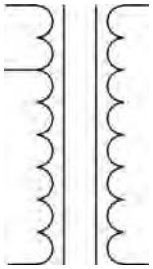

EX = Transformer
变压器

KB = Keyboard/Keypad
键盘/键盘

MN = Electronic Monitor
电子显示监控器

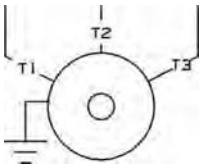

MR = Motor
马达

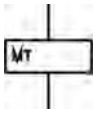

MT = Board Connector
板连接器

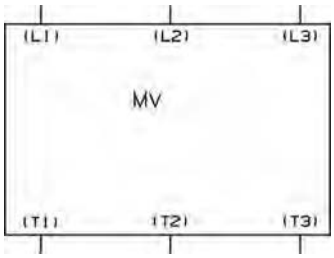

MV = Motor Inverter
电机变频器逆变器

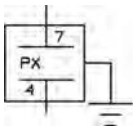

PX = Proximity Switch
接近开关

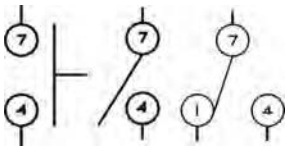

SH = Switch Hand Operated
切换手动操作

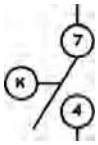

SK = Switch Key Operated
切换通过按键操作

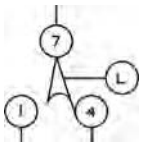

SL = Switch Level Operated
液位开关

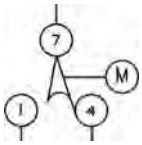

SM = Switch Mechanically Operated
机械操作开关

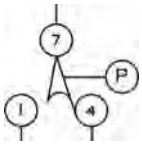

SP = Switch Pressure Operated
开关压力

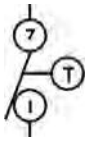

ST = Switch Temperature Operated
温度开关

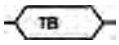

TB = Terminal Block
接线端子

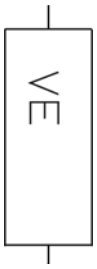

VE = Valve Electrically Operated
电磁阀

WC = Wiring Connector
接线连接器

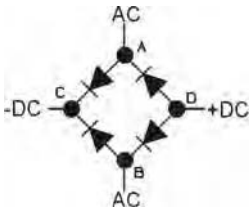

ZF = Rectifier
整流器

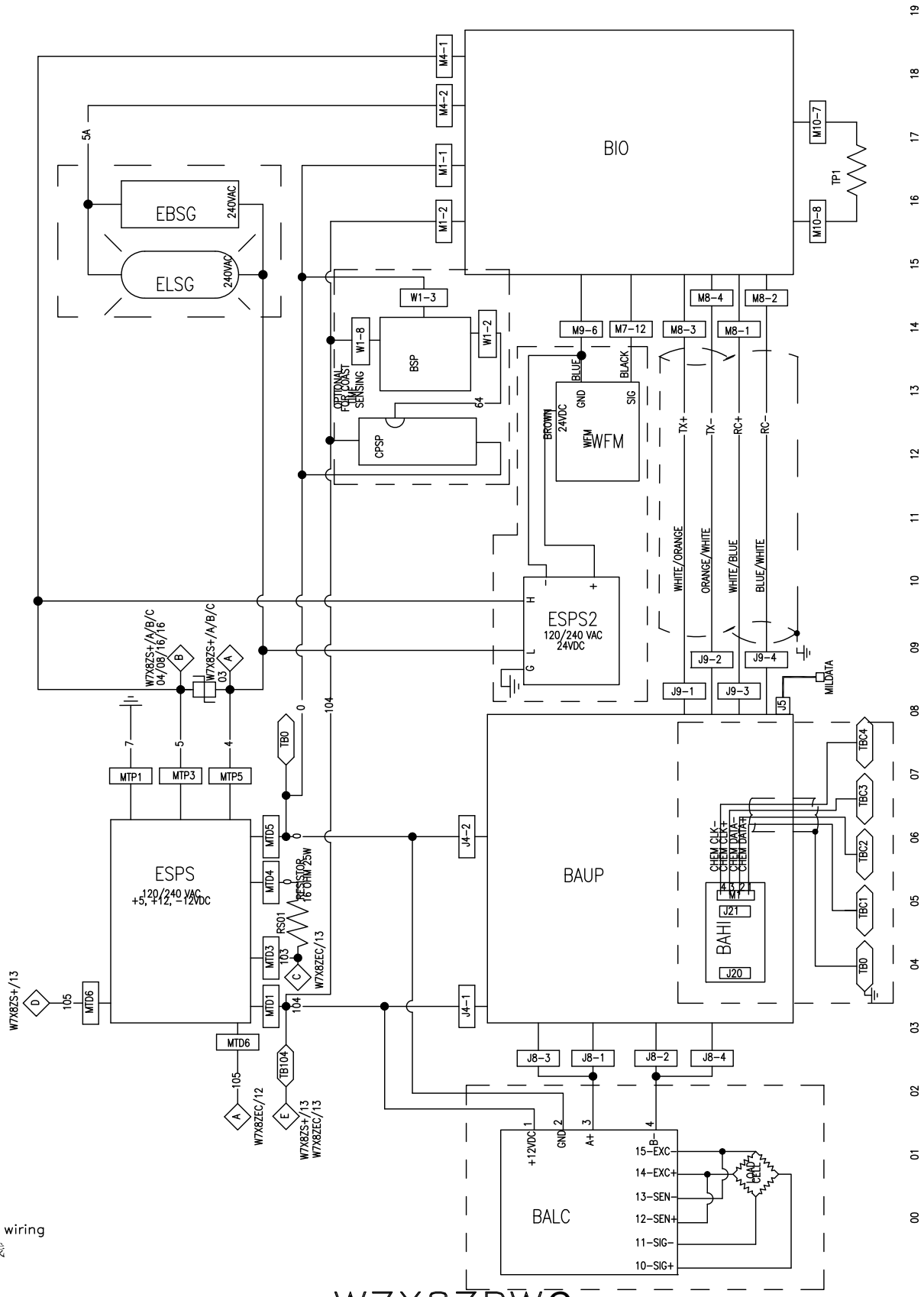

board wiring
板接线

W7X8ZBWC

PELLERIN MILNOR CORPORATION

2021034A

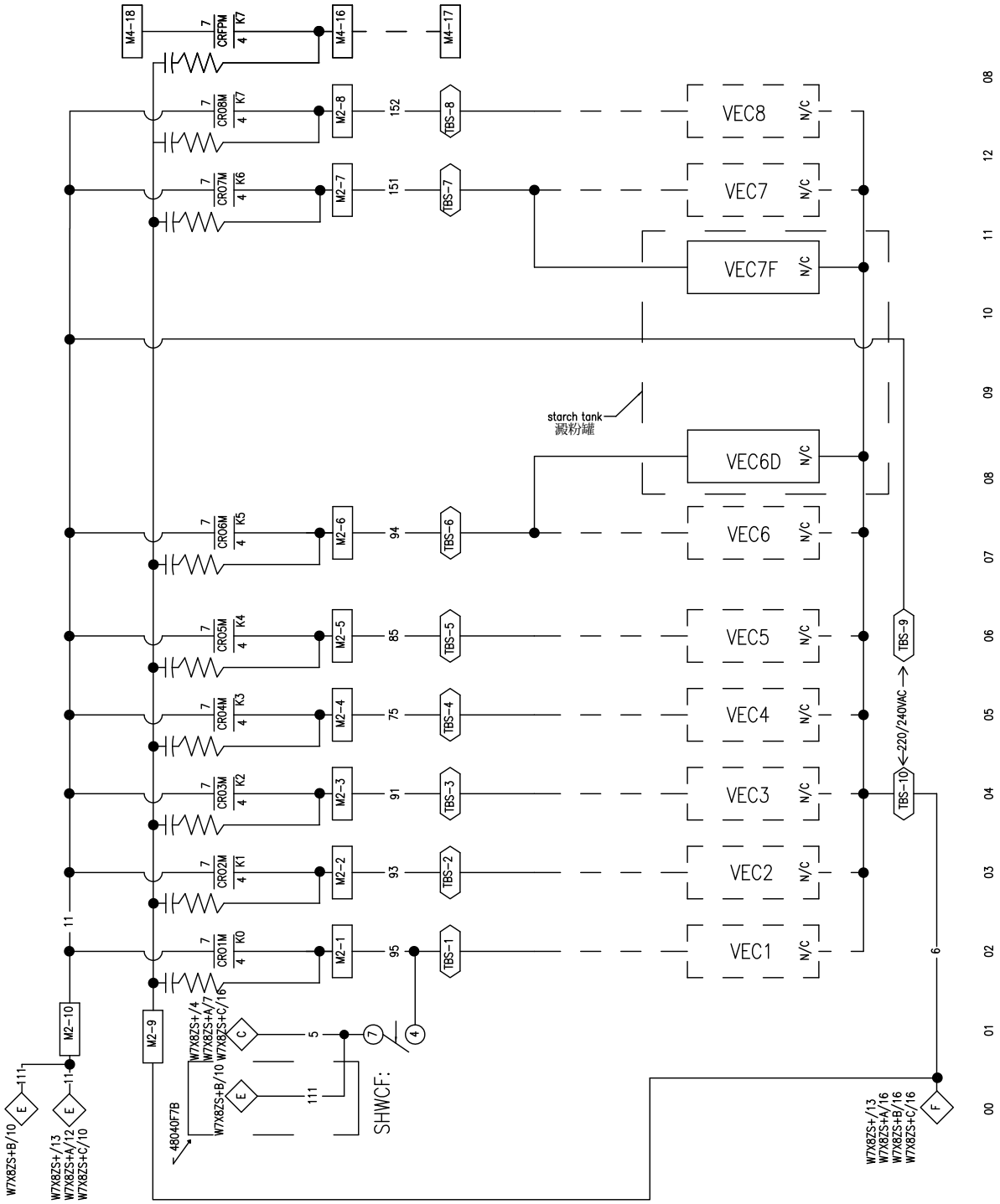

flushing supplies
冲洗接口

W7X8ZCFC

PELLERIN MILNOR CORPORATION

2023052A

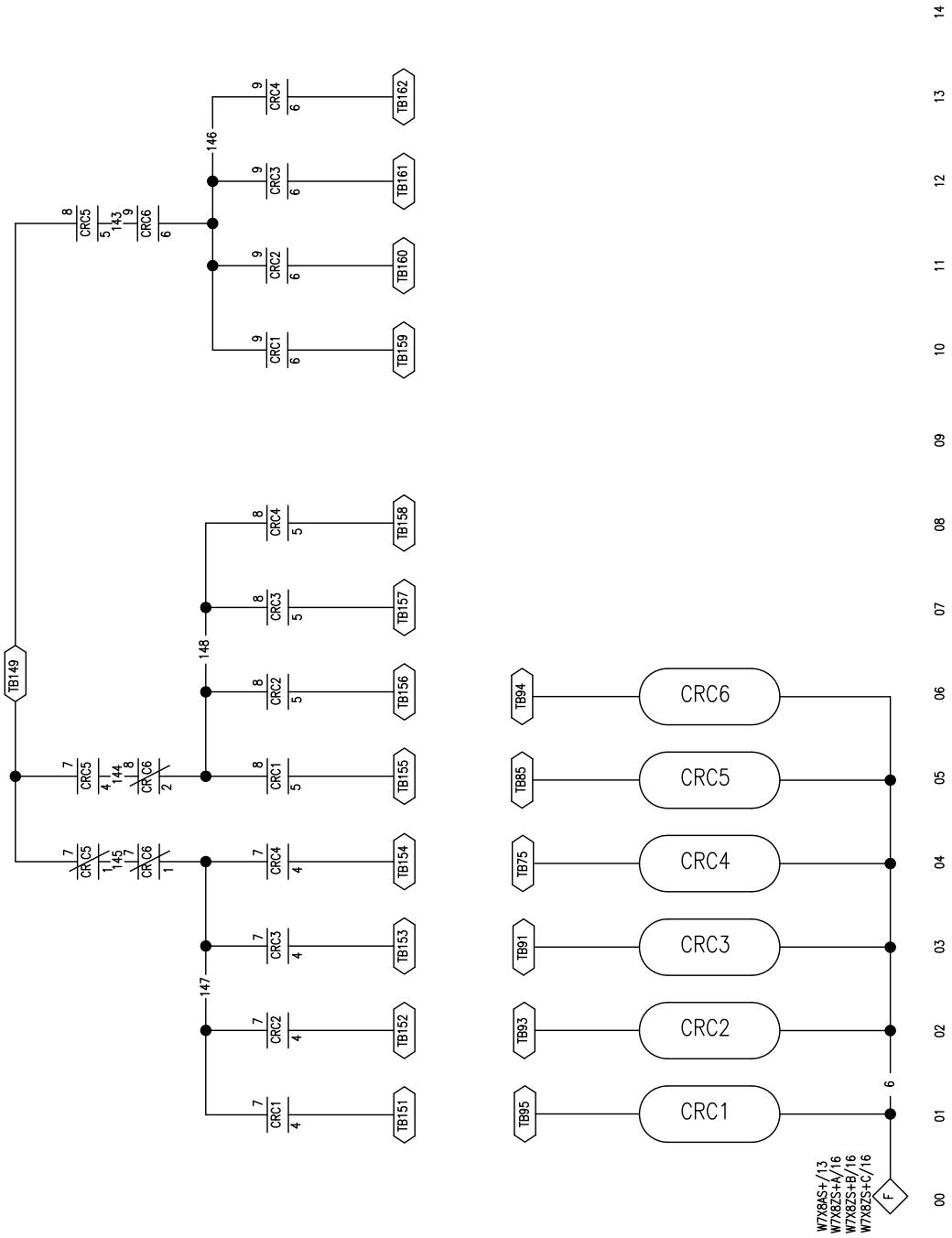

12 flushing supplies

12个冲洗接口

W7X8ZCMC

PELLERIN MILNOR CORPORATION

2013133A

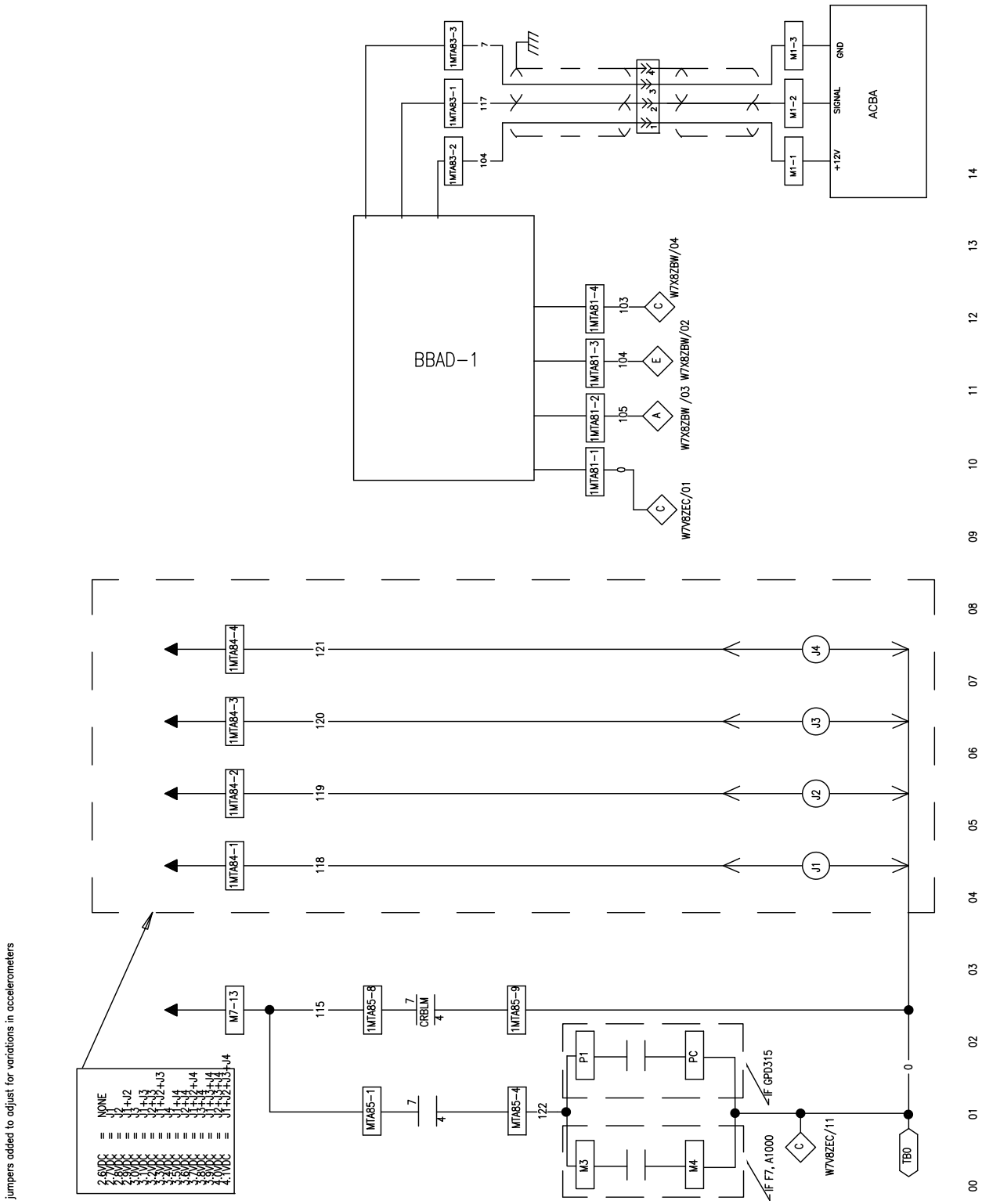

extract speed limit control

甩干极限速度控制

W7X8ZEC C

PELLERIN MILNOR CORPORATION

2023014A

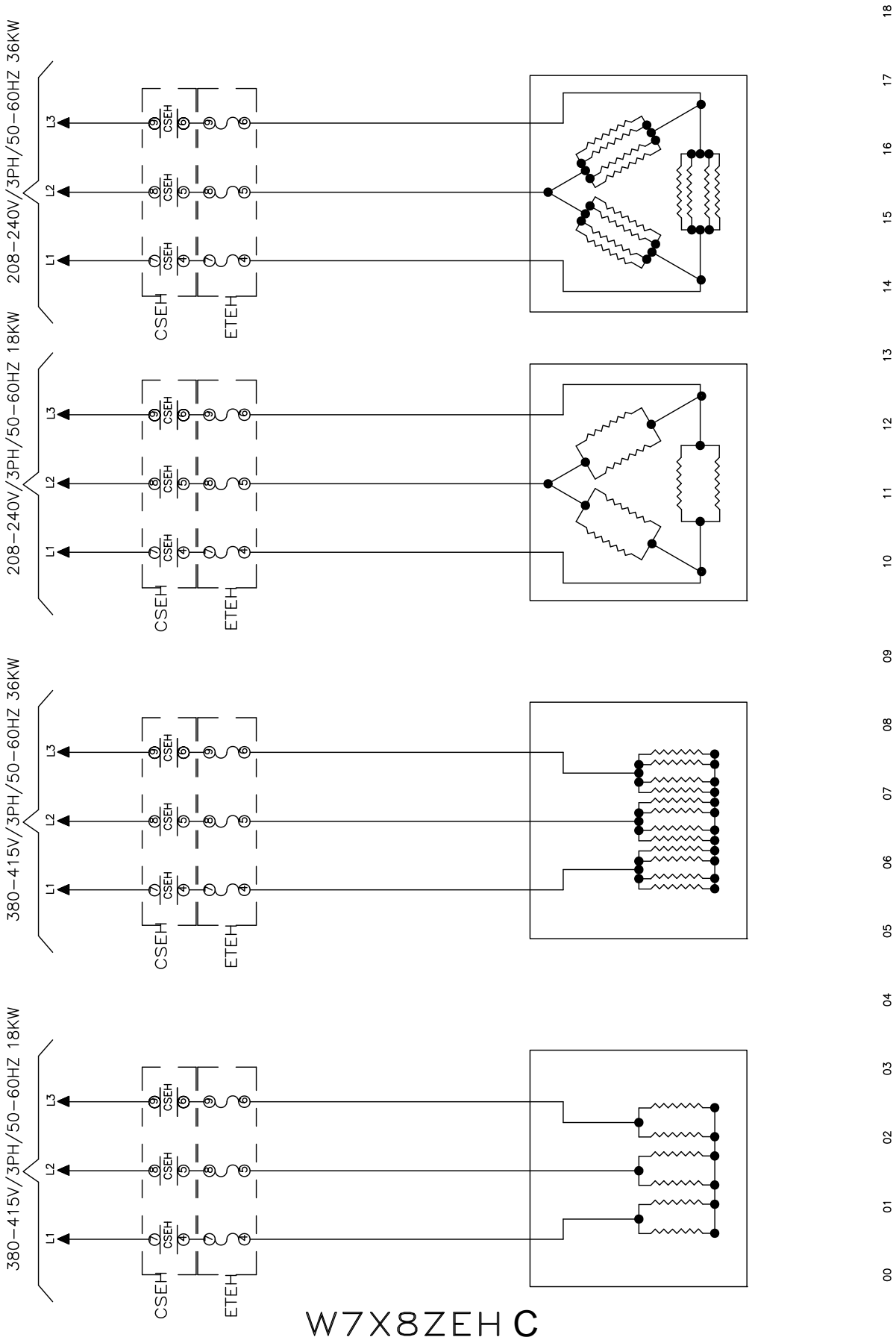

electric heat

电加热

W7X8ZEH C

PELLERIN MILNOR CORPORATION

2013133A

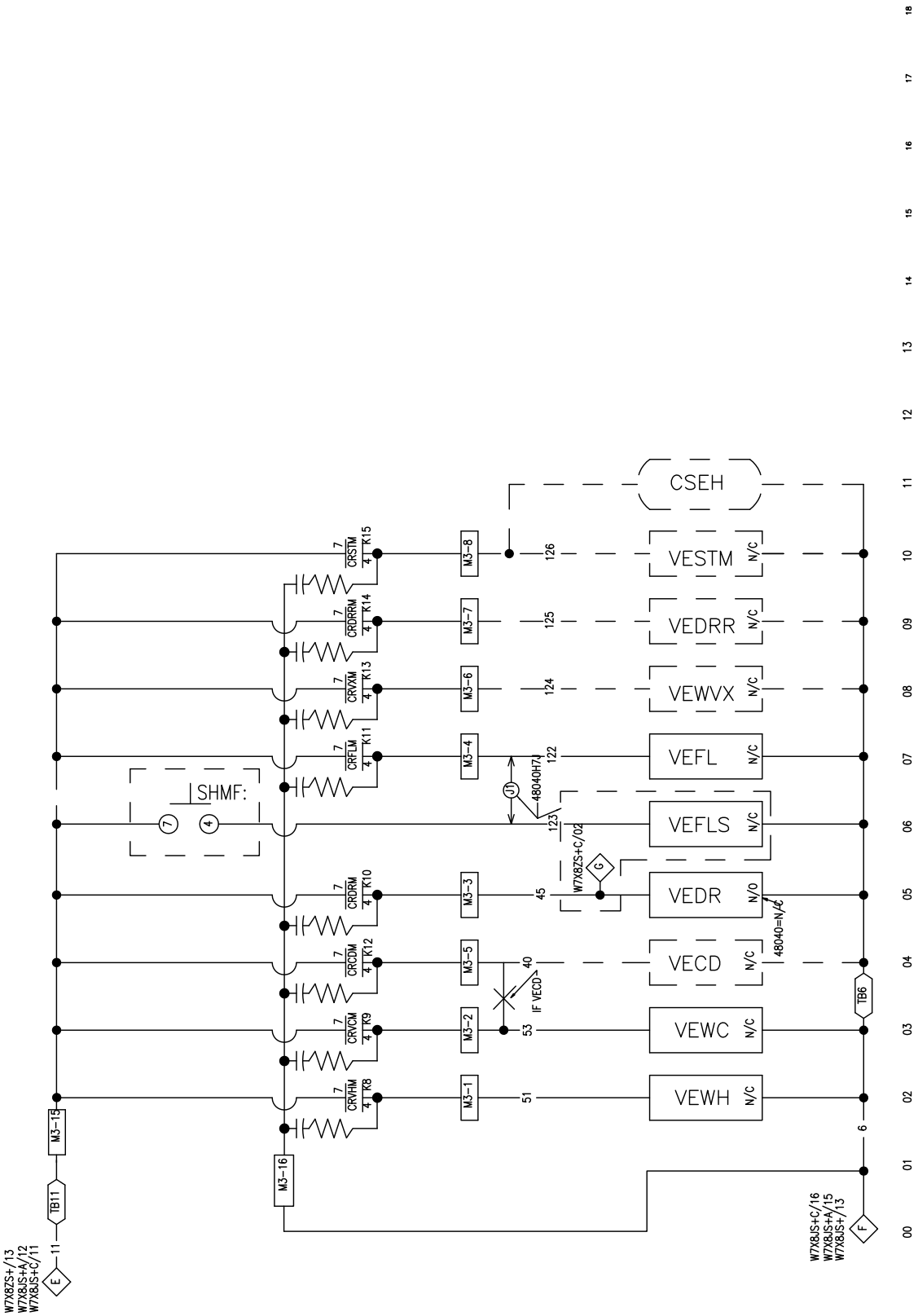

MWF27Z8, 45Z8, 63Z7, & 77Z7
electric valves
电磁阀

W7X8ZEVC

PELLERIN MILNOR CORPORATION

2013133A

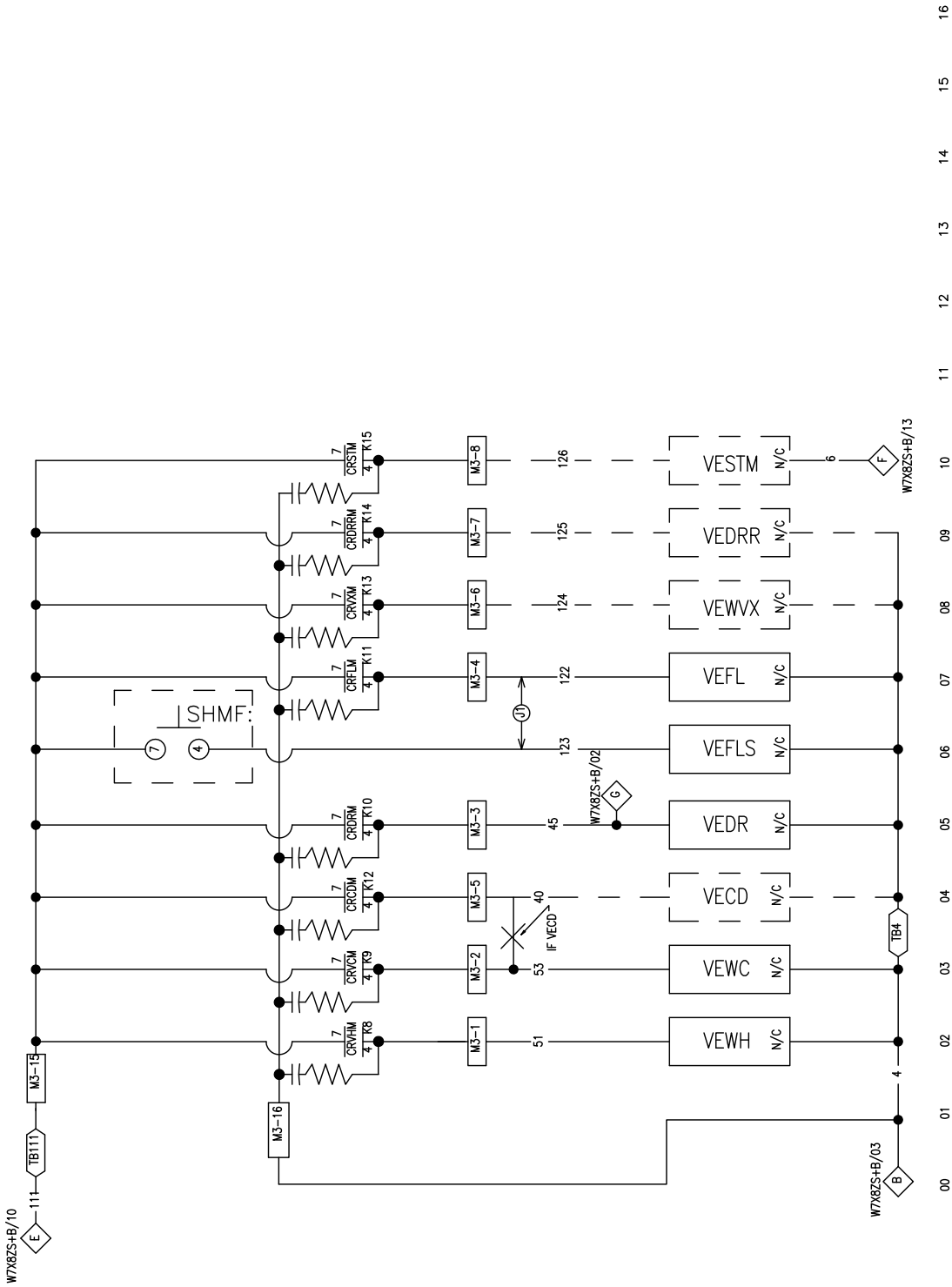

48040F7D
electric valves
电磁阀

W7X8ZEVAC

PELLERIN MILNOR CORPORATION

2014253A

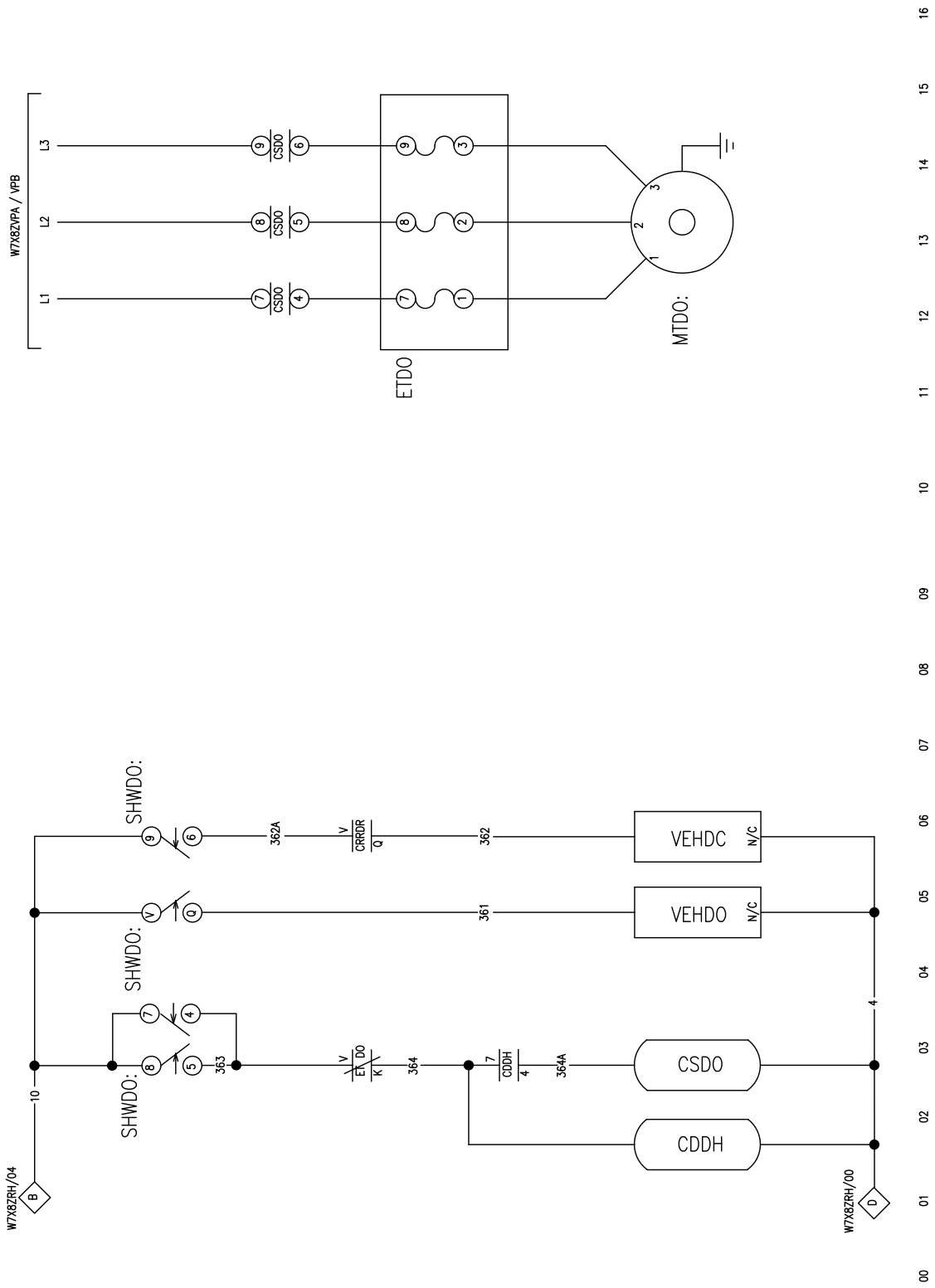

hydraulic door
液压门

W7X8ZHDC

PELLERIN MILNOR CORPORATION

2019034A

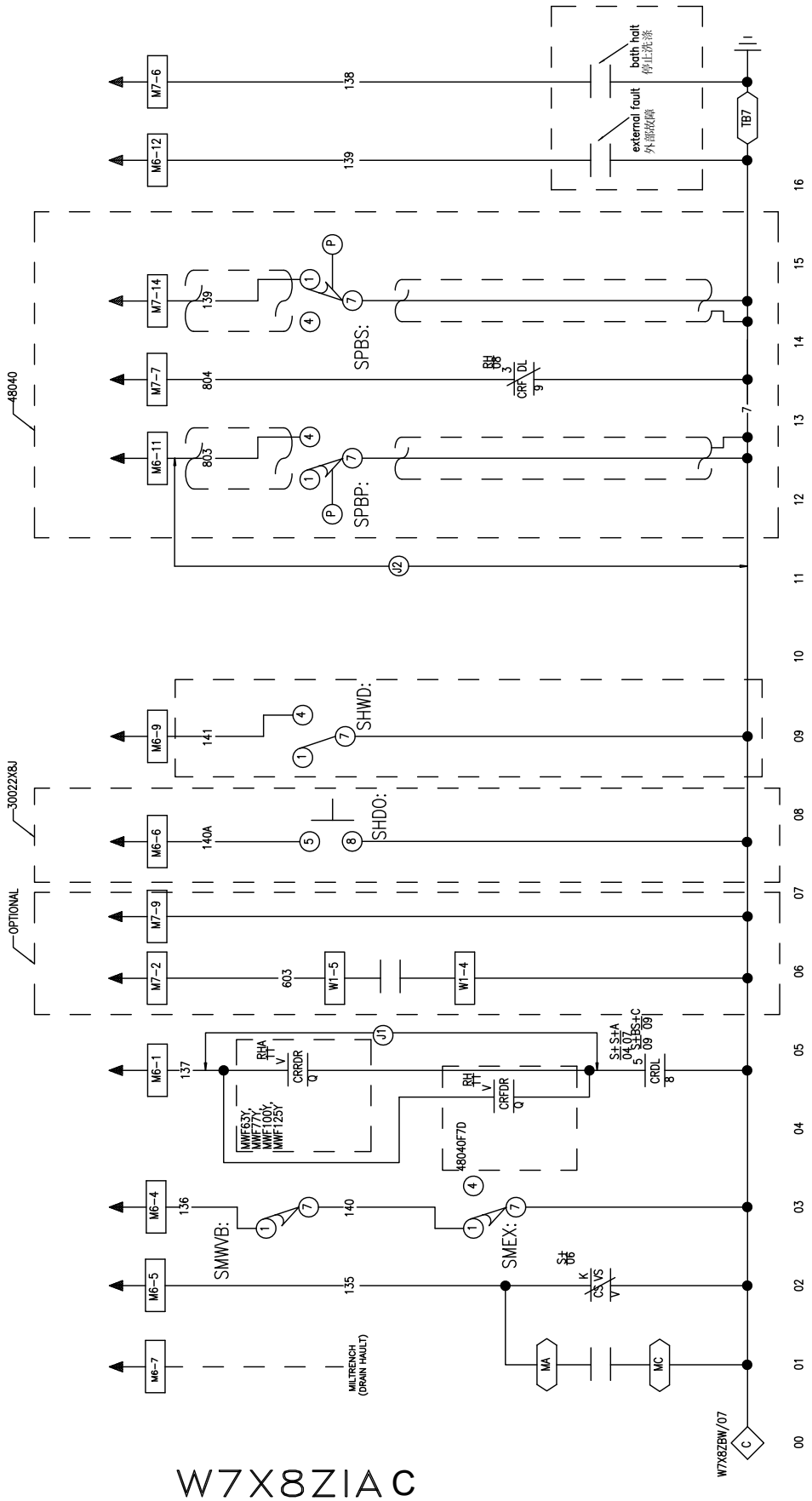

microprocessor inputs
处理器输入

W7X8ZIAC

PELLERIN MILNOR CORPORATION

2023052A

REFER TO THE CONNECTION DIAGRAM OF THE TRANSFORMERS FOR THE CORRESPONDING WIRE NUMBERS
有关相应的线号，请参阅变压器的连接图

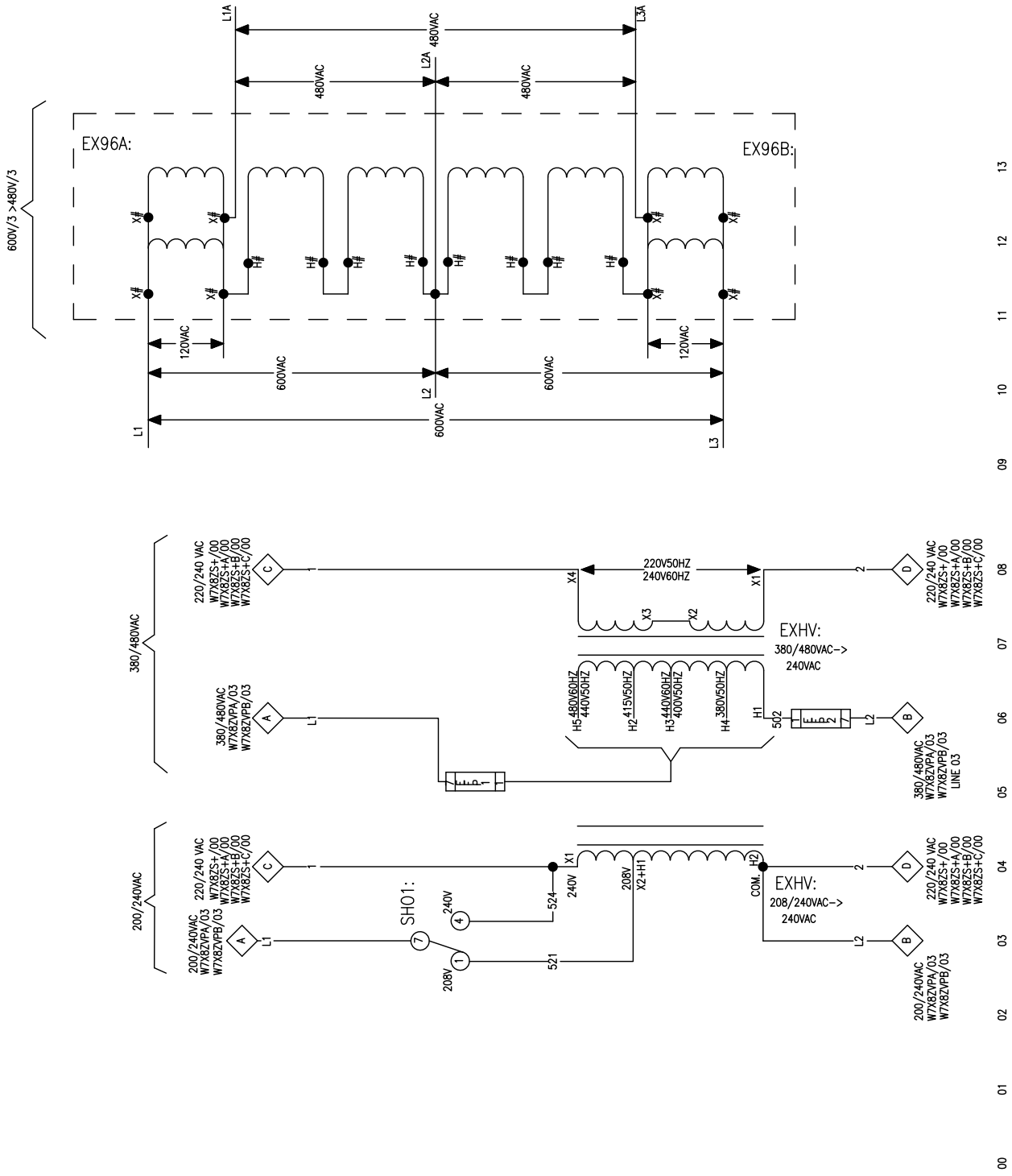

control transformer
控制变压器

W7X8ZLV C

PELLERIN MILNOR CORPORATION

2021073A

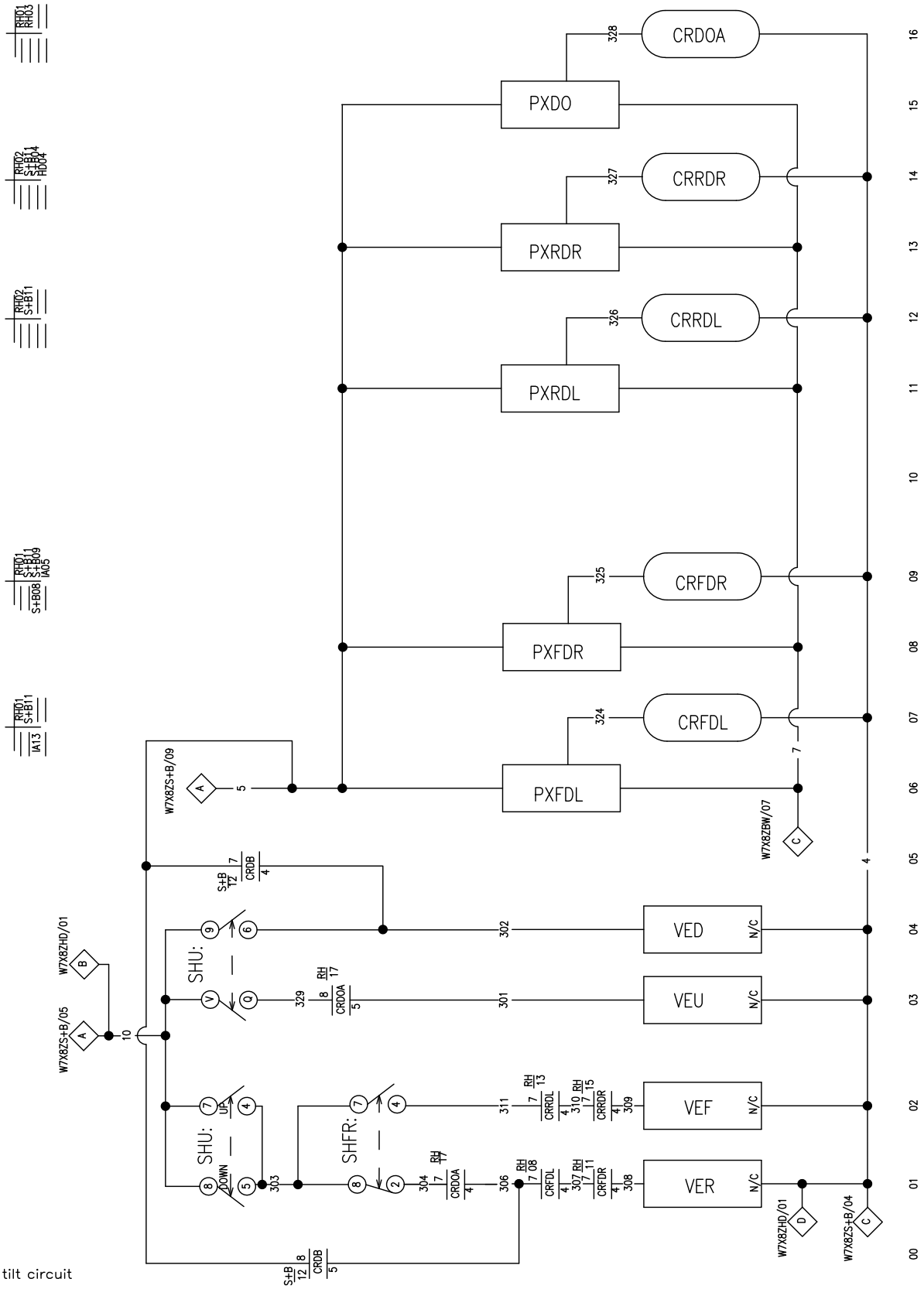

48040F7D tilt circuit
倾斜电路

W7X8ZRHC

PELLERIN MILNOR CORPORATION

2020392A

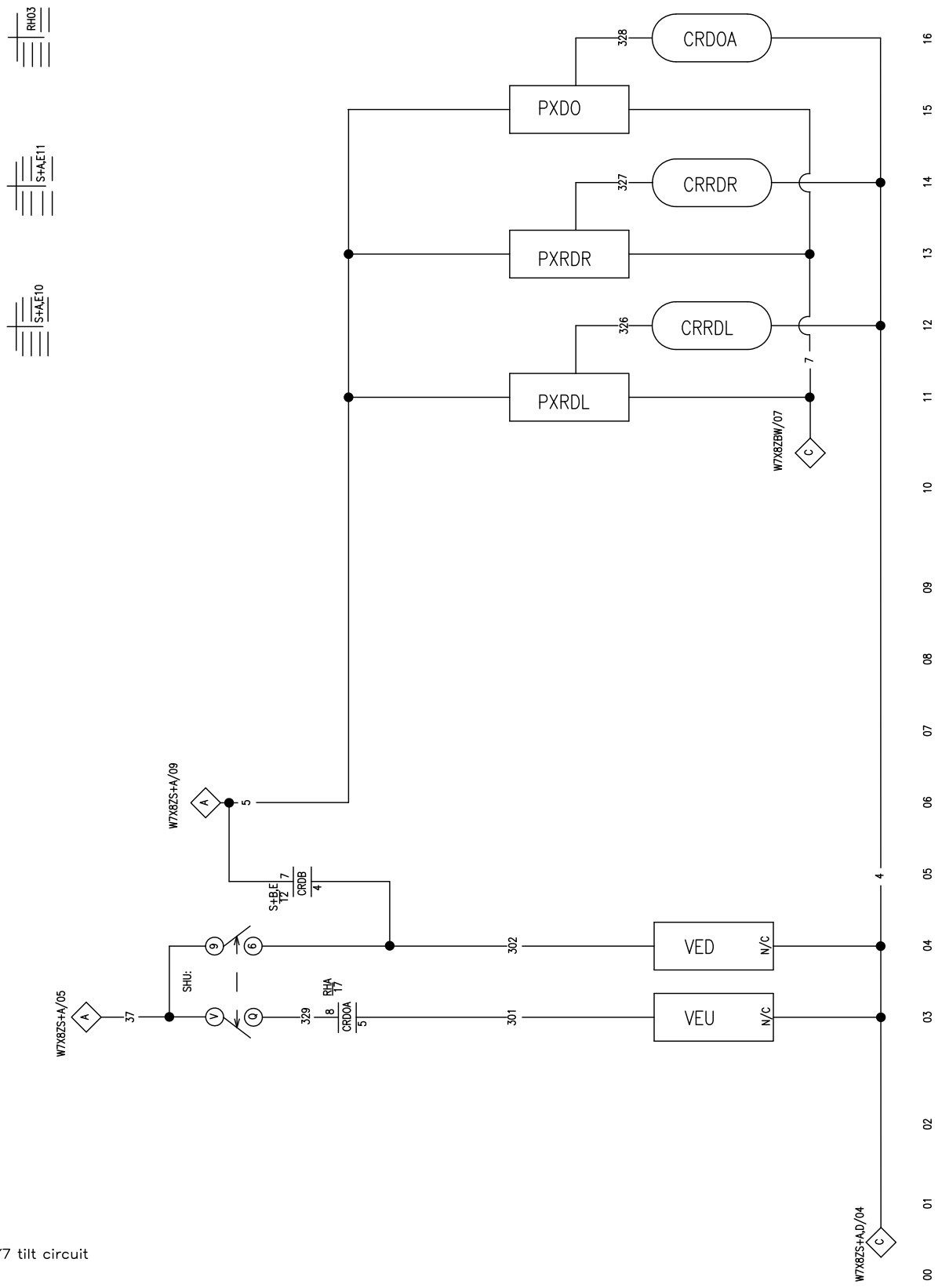

MWF63—125Y7 tilt circuit
倾斜电路

W7X8ZRHAC

PELLERIN MILNOR CORPORATION

2020392A

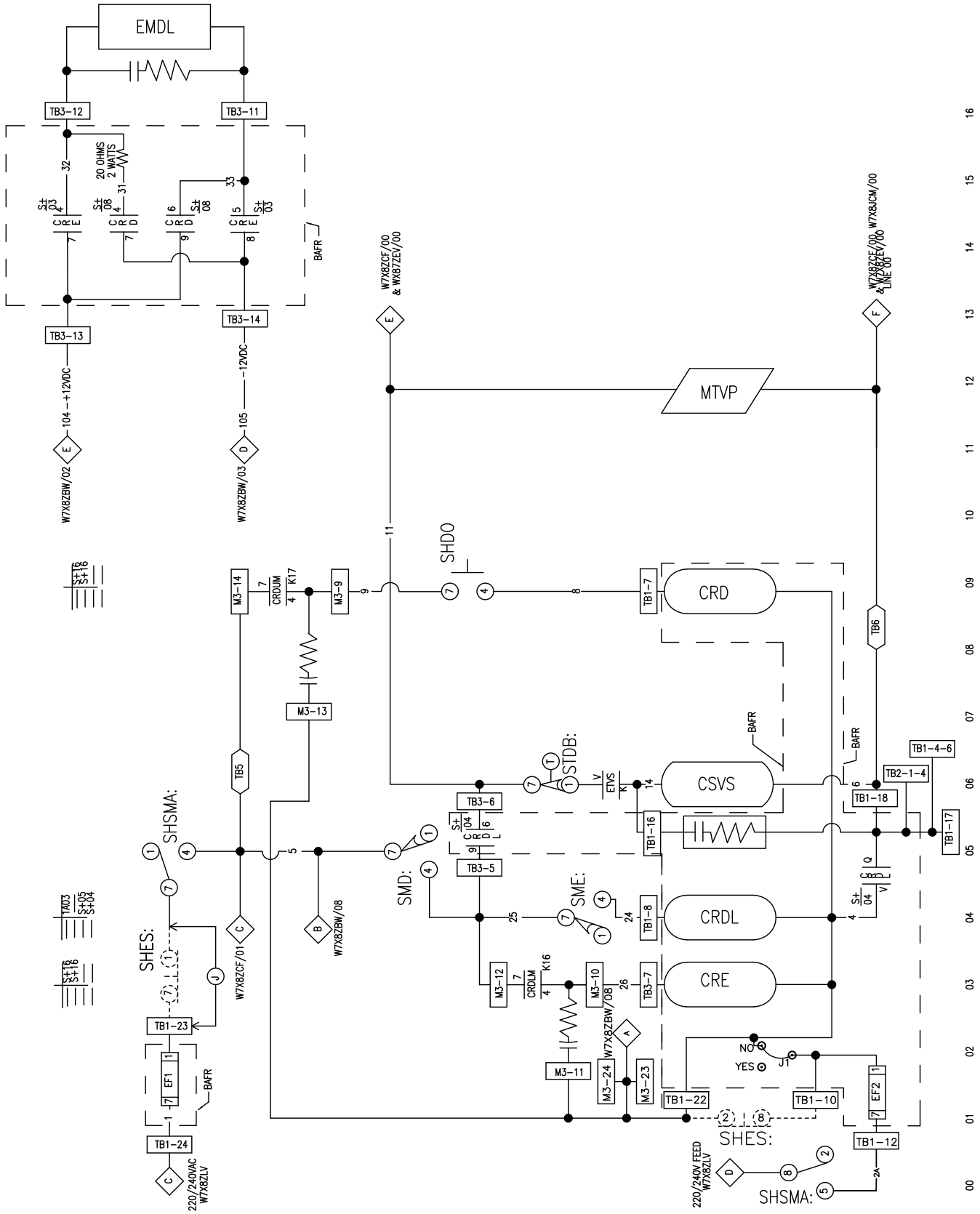

MWF27Z8
start circuit
启动电路
Circuito de partida

W7X8ZS+X

PELLERIN MILNOR CORPORATION

2025104A

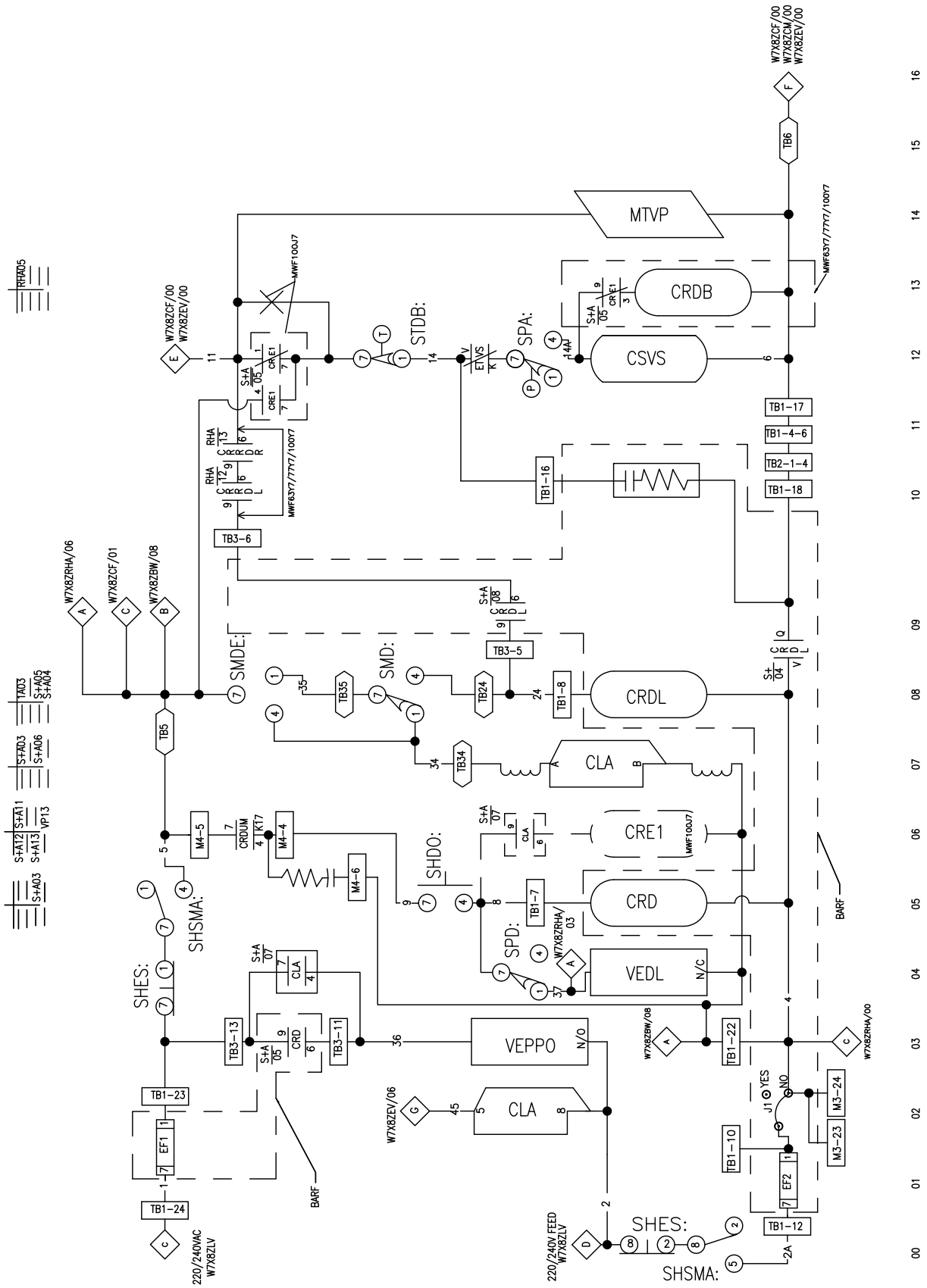

W7X8ZS+AC

MWF45Z8, 63Z7, 77Z7, 100Z/Y7
start circuit
启动电路

PELLERIN MILNOR CORPORATION

2019034A

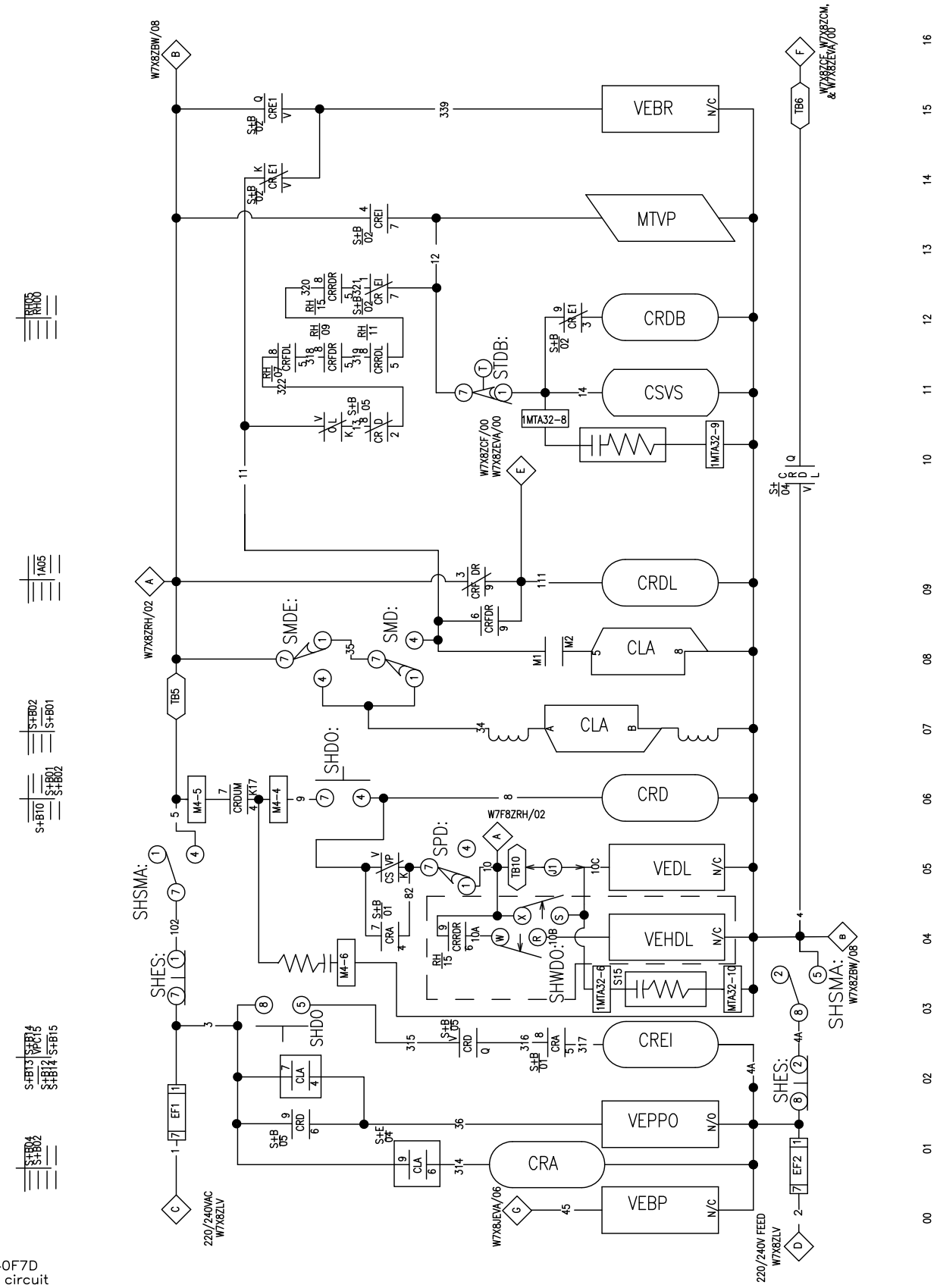

48040F7D
start circuit
启动电路

W7X8ZS+BC

PELLERIN MILNOR CORPORATION

2019034A

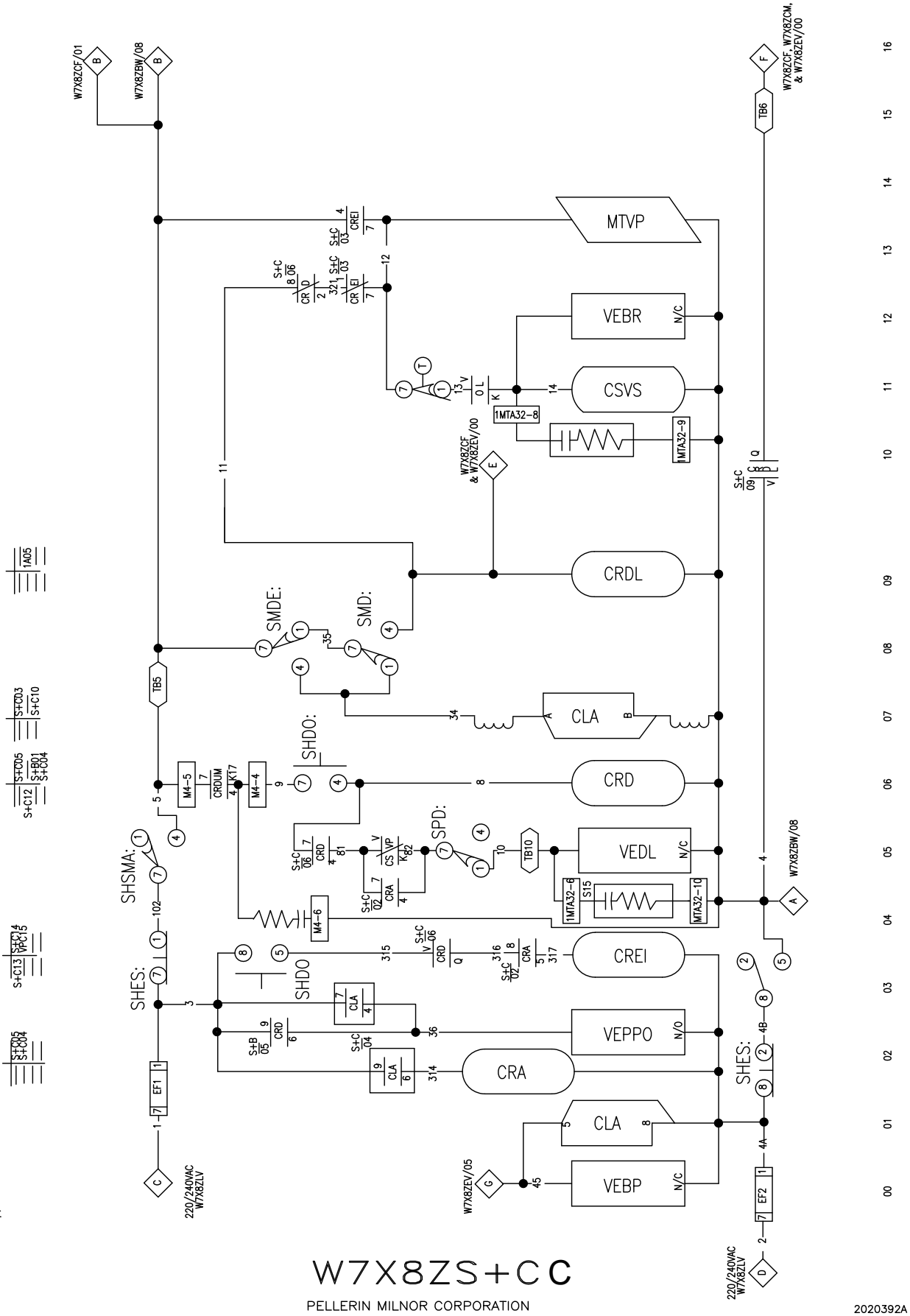

W7X8ZS+CC

PELLERIN MILNOR CORPORATION

2020392A

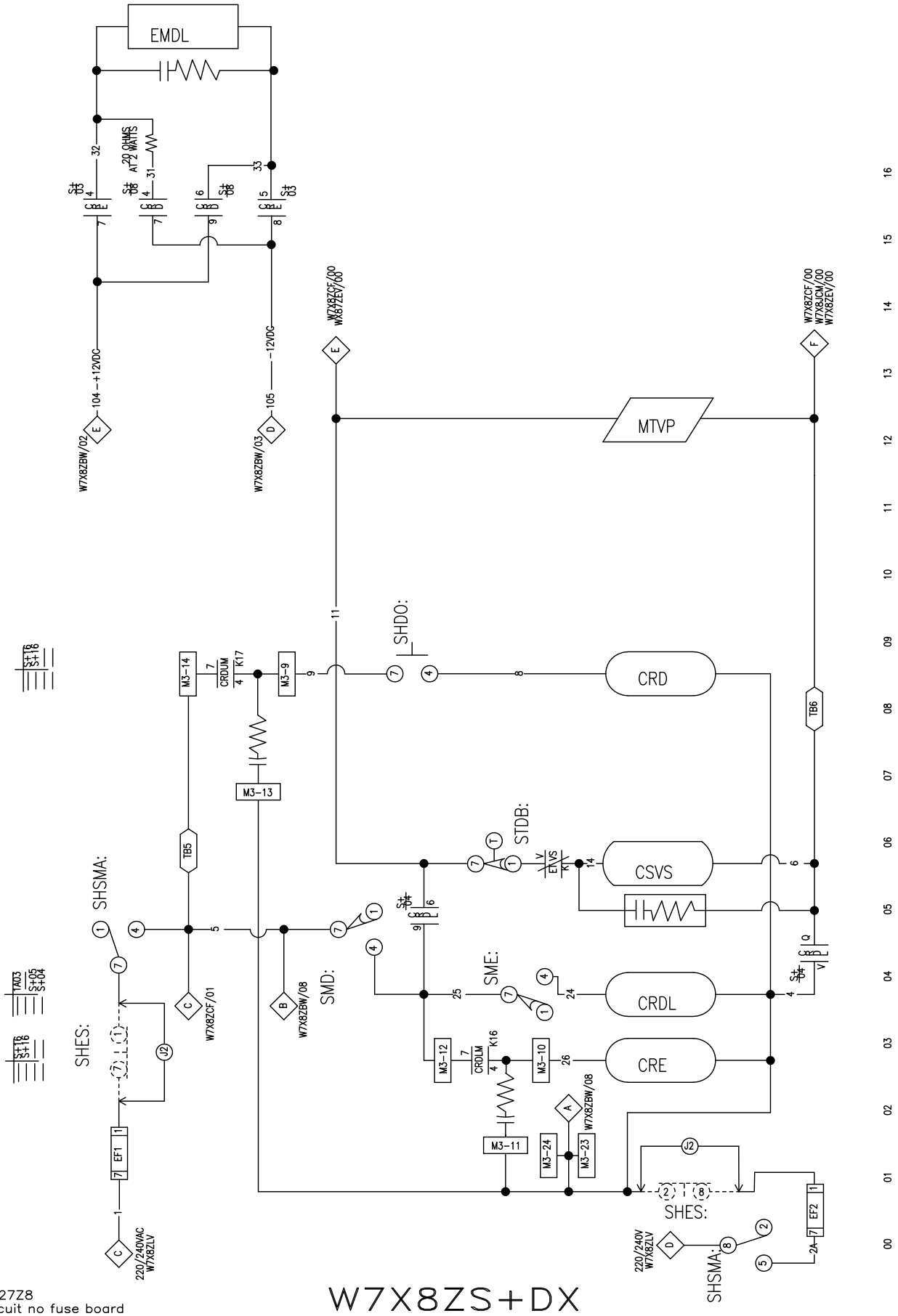

MWF18/27Z8
start circuit no fuse board
启动电路无保险丝板
iniciar circuito sem placa de fusíveis

W7X8ZS+DX

PELLERIN MILNOR CORPORATION

2025104A

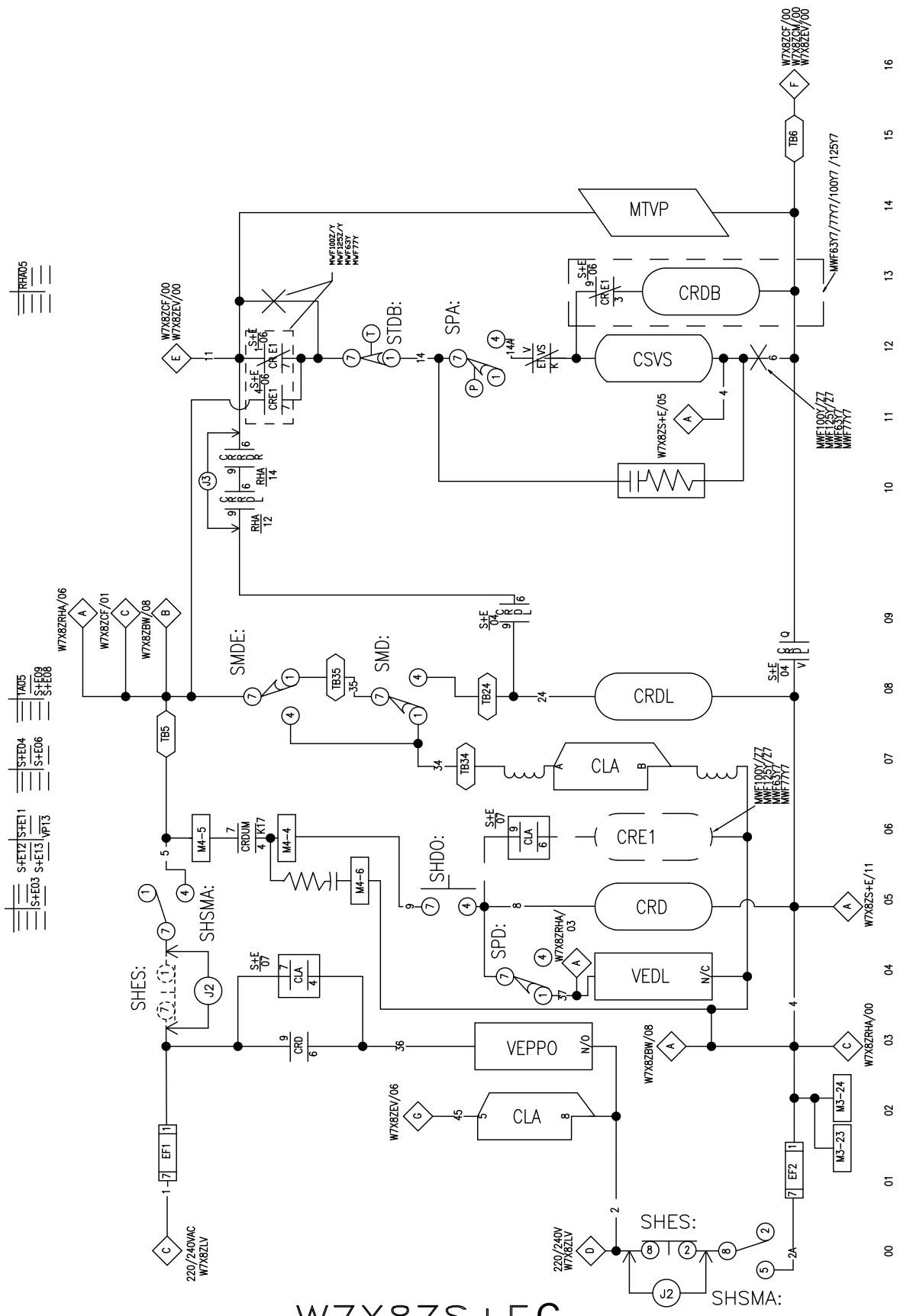

W7X8ZS+EC

MWF45Z8, 63Z7, 77Z7, 100Z/Y7, 125Z/Y7
start circuit, no fuse board
启动电路

PELLERIN MILNOR CORPORATION

2020392A

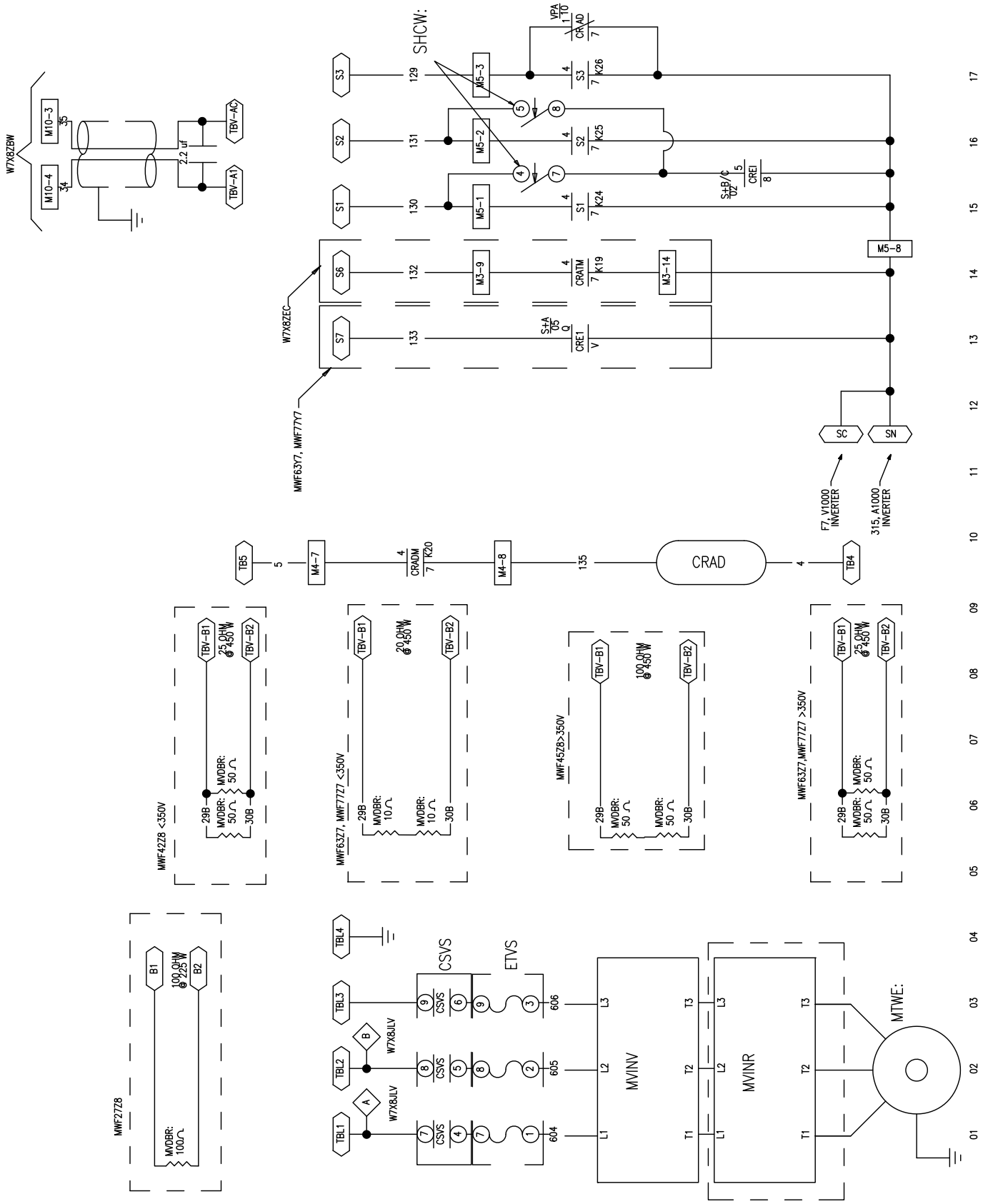

MWF18/27/45Z8, 63/77Z/Y7
inverter
逆?器
inversor

W7X8ZVPAX

PELLERIN MILNOR CORPORATION

2024473A

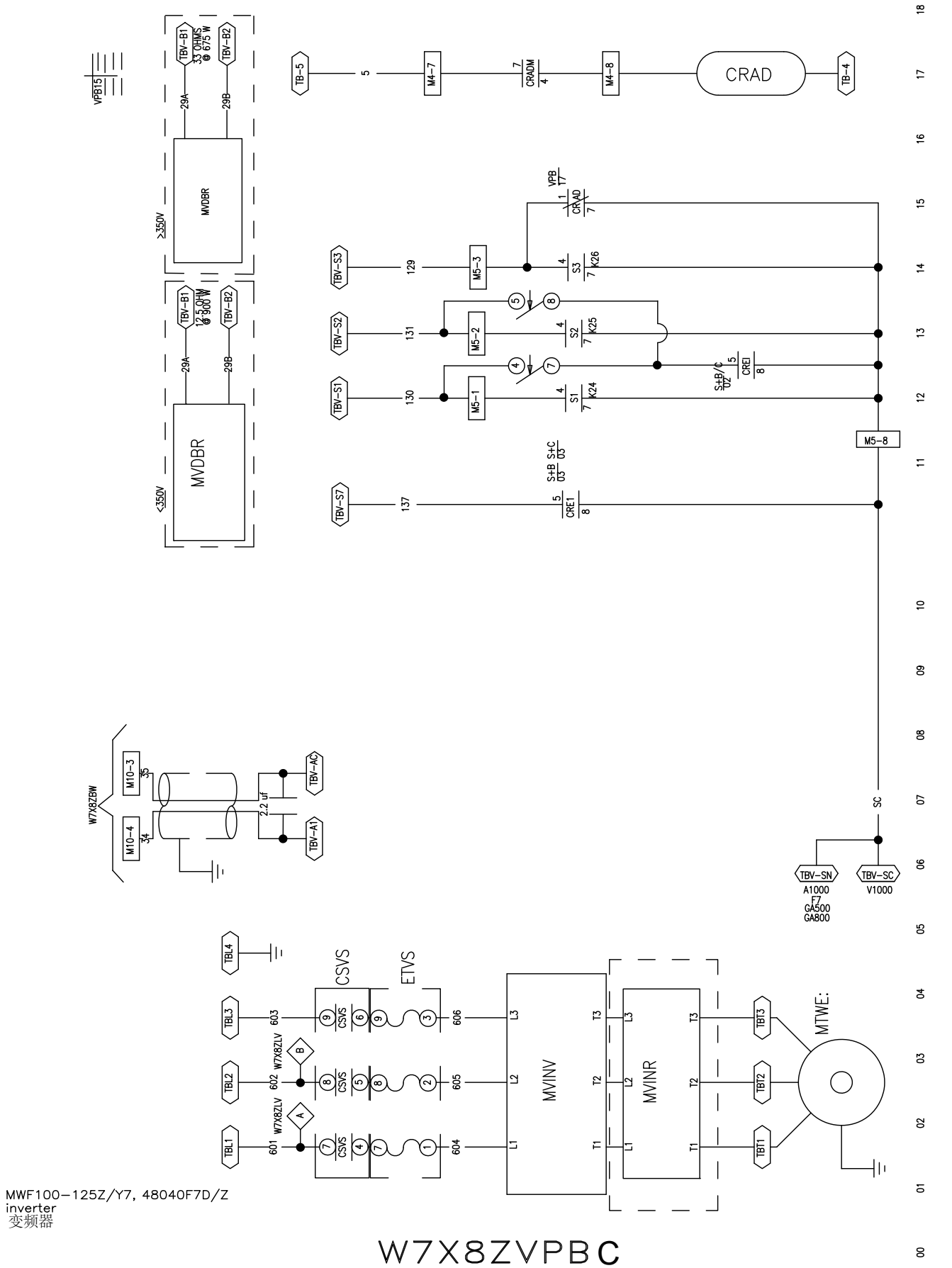

MWF100-125Z/Y7, 48040F7D/Z
inverter
变频器

W7X8ZVPBC

PELLERIN MILNOR CORPORATION

2021332A

English/Português

2

The text in this Circuit Guide is provided in the following languages:

1. **English**
2. Portuguese

O texto neste circuito guia é fornecido nos seguintes idiomas:

1. Inglês
2. **Português**

Read the separate safety manual before installing, operating, or servicing

---

Leia o manual separado de segurança antes de instalar, funcionar ou fazer a manutenção.

How to Get the Necessary Repair Components

You can get components to repair your machine from the approved supplier where you got this machine. Your supplier will usually have the necessary components in stock. You can also get components from the Milnor® factory.

Tell the supplier the machine model and serial number and this data for each necessary component:

- The component number from this manual
- The component name if known
- The necessary quantity
- The necessary transportation requirements
- The schematic number
- If the component is a motor or electrical control, give the nameplate data from the used component.

To write the Milnor factory:

Pellerin Milnor Corporation
Post Office Box 400
Kenner, LA 70063-0400
United States

Telephone: 504-467-2787
Fax: 504-469-9777
Email: parts@milnor.com

Como Obter os Componentes de Manutenção Necessários

Você pode obter componentes para consertar a sua máquina do fornecedor aprovado onde adquiriu esta máquina. O seu fornecedor geralmente terá os componentes necessários em estoque. Você também pode obter componentes da fábrica Milnor.

Informe ao fornecedor, o modelo e o número de série da máquina e estes dados para cada componente necessário:

- O número do componente fornecido neste manual
- O nome do componente, se conhecido
- A quantidade necessária
- Os requisitos de transporte necessários
- O número da visão esquemática
- Se o componente for um motor ou controle elétrico, forneça os dados da placa de identificação do componente usado

Para entrar em contato com a fábrica Milnor por escrito:

Pellerin Milnor Corporation
caixa postal 400
Kenner, LA 70063-0400
Estados Unidos

telefone: 504-467-2787
Fax: 504-469-9777
E-mail: parts@milnor.com

AC			
ACBA	< 7-2022	W7X8ZEC	EACCLRM3
ACBA	> 7-2022	W7X8ZEC	EACCLRM8
BA			
BAFR		W7X8ZS+	08BHFRCT
BAFR		W7X8ZS+A	08BHFRCT
BAUP		W7X8ZBW	08BHA9D3T
BBAD-1		W7X8ZEC	08BSBADCTE
BIO		W7X8ZBW	08BHF120AT
BSP		W7X8ZBW	08BNDSRAT
CD			
CDDH		W7X8ZHD	09CF001071
CL			
CLA		W7X8ZS+A	09CL2C-C71
CLA		W7X8ZS+B	09CL2C-C71
CLA		W7X8ZS+C	09CL2C-C71
CLA-CHOKE		W7X8ZS+A	10YCLCHOKE
CLA-CHOKE		W7X8ZS+B	10YCLCHOKE
CLA-CHOKE		W7X8ZS+C	10YCLCHOKE
CP			
CPSP		W7X8ZBW	09RPE013Q
CR			
CRA		W7X8ZS+B	09C024D71
CRA		W7X8ZS+C	09C024D71
CRAD		W7X8ZVPB	09C024D71
CRC1		W7X8ZCM	09C024D71
CRC2		W7X8ZCM	09C024D71
CRC3		W7X8ZCM	09C024D71
CRC4		W7X8ZCM	09C024D71
CRC5		W7X8ZCM	09C024D71
CRC6		W7X8ZCM	09C024D71
CRD		W7X8ZS+	09C024D71
CRD		W7X8ZS+A	09C024D71
CRD		W7X8ZS+B	09C024D71
CRD		W7X8ZS+C	09C024D71
CRDB		W7X8ZS+A	09C024D71
CRDB		W7X8ZS+B	09C024D71
CRDL		W7X8ZS+	09C024D71
CRDL		W7X8ZS+A	09C024D71
CRDL		W7X8ZS+B	09C024D71
CRDL		W7X8ZS+C	09C024D71
CRDOA		W7X8ZRH	09C024D71
CRDOA		W7X8ZRHA	09C024D71
CRDRA		W7X8ZSRH	09C024D71
CRE		W7X8ZS+	09C024D71
CREI		W7X8ZS+B	09C024D71
CREI		W7X8ZS+C	09C024D71
CRFDL		W7X8ZRH	09C024D71
CRFDL		W7X8ZRH	09C024D71
CRFDR		W7X8ZRH	09C024D71

CRFDR		W7X8ZSRH	09C024D71
CRRDL		W7X8ZRH	09C024D71
CRRDL		W7X8ZRHA	09C024D71
CRRDL		W7X8ZSRH	09C024D71
CRRDR		W7X8ZRH	09C024D71
CRRDR		W7X8ZRHA	09C024D71
CRRDR		W7X8ZSRH	09C024D71
CS			
CSDO		W7X8ZHD	09MC08C371
CSVS	MWF27Z8	W7X8ZS+	98CMCR3004
CSVS	MWF45Z8	W7X8ZS+A	98CMCR3601
CSVS	MWF63-77 <350V	W7X8ZS+A	98CMCR4201
CSVS	MWF63-77 >350V	W7X8ZS+A	98CMCR4202
CSVS		W7X8ZS+B	09MC08E371
CSVS		W7X8ZS+C	09MC08E371
CSVS	MWF45,63,77	W7X8ZVPA	09MC08G371
CSVS	48040>350V	W7X8ZVPB	09MC08G371
CSVS	48040<350V	W7X8ZVPB	09MC08N371
EF			
EF1		W7X8ZS+	09FF002AMG
EF2		W7X8ZS+	09FF002AMG
EF2		W7X8ZS+A	09FF002AMG
EFP1	>250V	W7X8ZLV	09FF003AWV
EFP2	>250V	W7X8ZLV	09FF003AWV
EM			
EMDL		W7X8ZS+	09K063C24
EP1		W7X8ZS+A	09FF002AMG
ES			
ESPS		W7X8ZBW	08PSS3401T
ET			
ETVS	MWF27	W7X8ZVPA	09FTD0120T
ETVS		W7X8ZVPA	09FTD0121T
ETVS	MWF27 LV	W7X8ZVPA	98CMCR3005
ETVS	MWF45 <350V	W7X8ZVPA	98CMCR3602
ETVS	MWF45 >350V	W7X8ZVPA	98CMCR3603
ETVS	MWF63,77 <350V	W7X8ZVPA	98CMCR4203
ETVS	MWF63, 77 >350V	W7X8ZVPA	98CMCR4204
EX			
EXHV		W7X8ZLV	MESSAGE EW
EXHV-1		W7X8ZLV	98CMCR0902
EXHV-2		W7X8ZLV	09UA025AAB
EXHV-3		W7X8ZLV	09U251AB71
MOV		W7X8ZBW	08M0V0240
MT			
MTVP		W7X8ZS+A	13AF100A71
MTVP		W7X8ZS+B	13AF100A71
MTVP		W7X8ZS+C	13AF100A71
MTWE		W7X8ZVPA	MESSAGE SO
MTWE		W7X8ZVPB	MESSAGE SO
MV			

MVDBR		W7X8ZVPA	09MV100RET
MVDBR		W7X8ZVPB	09MV050REV
MVFLT		W7X8ZVPA	09MVFILTR1
MVFLT		W7X8ZVPB	09MVFILTR1
MVINR-H		W7X8ZVPA	09MX100A96
MVINR-H		W7X8ZVPA	09MX250A96
MVINR-H		W7X8ZVPB	09MX400A96
MVINR-L		W7X8ZVPA	09MX100A74
MVINR-L		W7X8ZVPA	09MX200A74
MVINR-L		W7X8ZVPB	09MX600A96
MVINV-H		W7X8ZVPA	09MWB00996
MVINV-H		W7X8ZVPA	09MWB01896
MVINV-H		W7X8ZVPA	09MWB02496
MVINV-H		W7X8ZVPB	09MWC03996
MVINV-L		W7X8ZVPA	09MWB01774
MVINV-L		W7X8ZVPA	09MWB03374
MVINV-L		W7X8ZVPA	09MWB04774
MVINV-L		W7X8ZVPB	09MWC07574
PX			
PXDO		W7X8ZRH	09RPS18CAS
PXDO		W7X8ZRHA	09RPS18CAS
PXFDL		W7X8ZRH	09RPS12AAS
PXFDL		W7X8ZRHA	09RPS12AAS
PXFDR		W7X8ZRH	09RPS12AAS
PXRDL		W7X8ZRH	09RPS12AAS
PXRDR		W7X8ZRH	09RPS12AAS
PXRDR		W7X8ZRHA	09RPS12AAS
RS01		W7X8ZBW	09AR16R25
SH			
SH01		W7X8ZLV	09N050
SHCW		W7X8ZVPB	09N405M320
SHDO		W7X8ZIA	09N405PB10
SHDO		W7X8ZS+	09N405PB10
SHDO		W7X8ZS+A	09N405PB10
SHDO		W7X8ZS+B	09N405PB10
SHDO		W7X8ZS+C	09N405PB10
SHES		W7X8ZS+	09N508A
SHES		W7X8ZS+A	09N508A
SHES		W7X8ZS+B	09N508A
SHES		W7X8ZS+C	09N508A
SHFR		W7X8ZRH	09N405M320
SHMF		W7X8ZEV	09N405PB10
SHMF		W7X8ZEVA	09N405PB10
SHSMA		W7X8ZS+	09N405M220
SHSMA		W7X8ZS+A	09N405M220
SHSMA		W7X8ZS+B	09N405M220
SHSMA		W7X8ZS+C	09N405M220
SHU		W7X8ZRH	09N405S320
SHU		W7X8ZRHA	09N405S320
SHWD		W7X8ZIA	09N405M210

SHWDO		W7X8ZHD	09N405S320
SHWDO		W7X8ZS+B	09N405S320
SK			
SKPR		W7X8ZIA	09N127C
SM			
SMD		W7X8ZS+	02 04177
SMD		W7X8ZS+A	09R014A
SMD		W7X8ZS+B	09R014A
SMD		W7X8ZS+C	09R014A
SMDE		W7X8ZS+A	09R012
SMDE		W7X8ZS+B	09R012
SMDE		W7X8ZS+C	09R012
SME		W7X8ZS+	09R010D
SMEX		W7X8ZIA	09R008ASTD
SMWVB		W7X8ZIA	SAE03 151
SP			
SPA		W7X8ZS+A	09N082A
SPBP		W7X8ZIA	09N082B05
SPBS		W7X8ZIA	09N082A
SPD		W7X8ZS+A	09N082B10
SPD		W7X8ZS+B	09N082B10
SPD		W7X8ZS+C	09N082B10
ST			
STDB		W7X8ZS+	30RA175T
STDB		W7X8ZS+A	30RA175T
STDB		W7X8ZS+B	30RA175T
STDB		W7X8ZS+C	30RA175T
TP1		W7X8ZBW	30R0043P
VE			
VEBP		W7X8ZS+A	96TBC2BA71
VEBP		W7X8ZS+B	96TBC2BA71
VEBP		W7X8ZS+C	96TBC2BA71
VEBR		W7X8ZS+A	96R301B71
VEBR		W7X8ZS+B	96R301B71
VEBR		W7X8ZS+C	96R301B71
VEC1		W7X8ZCF	--
VEC2		W7X8ZCF	--
VEC3		W7X8ZCF	--
VEC4		W7X8ZCF	--
VEC5		W7X8ZCF	--
VEC6		W7X8ZCF	--
VEC7		W7X8ZCF	--
VEC8		W7X8ZCF	--
VECD		W7X8ZEV	96P057A71
VECD		W7X8ZEV	96P056A71
VECD		W7X8ZEV	96P152A71
VECD		W7X8ZEV	96R301B71
VECD		W7X8ZEVA	96R301B71
VED		W7X8ZRH	96R301B71
VED		W7X8ZRHA	96R301B71

VEDL		W7X8ZS+A	98CMCR3001
VEDL		W7X8ZS+B	96R301B71
VEDL		W7X8ZS+C	96R301B71
VEDR		W7X8ZEV	96D350A71
VEDR		W7X8ZEV	96R301B71
VEDR		W7X8ZEVA	96R301B71
VEDRR		W7X8ZEV	96D350B71
VEDRR		W7X8ZEV	96R301B71
VEDRR		W7X8ZEVA	96R301B71
VEF		W7X8ZRH	96R301B71
VEFL		W7X8ZEV	96P057A71
VEFL		W7X8ZEV	96P056A71
VEFL		W7X8ZEVA	96R301B71
VEFL		W7X8ZEVA	96R301B71
VEFLS		W7X8ZEV	96P013G71
VEFLS		W7X8ZEVA	96P013G71
VEHDC		W7X8ZHD	96RH706E71
VEHDL		W7X8ZS+B	96R301B71
VEHDO		W7X8ZHD	96RH706E71
VEPPO		W7X8ZS+A	98CMCR3002
VEPPO		W7X8ZS+B	96R302B71
VEPPO		W7X8ZS+C	96R302B71
VESTM		W7X8ZEV	98CMCR3001
VESTM		W7X8ZEV	96R301B71
VESTM		W7X8ZEVA	96R301B71
VEU		W7X8ZRH	96R301B71
VEU		W7X8ZRHA	96R301B71
VEWC		W7X8ZEV	96P057A71
VEWC		W7X8ZEV	98CMCR3001
VEWC		W7X8ZEV	98CMCR3001
VEWC		W7X8ZEV	96R301B71
VEWC		W7X8ZEV	98CMCR3001
VEWC		W7X8ZEV	98CMCR3001
VEWC		W7X8ZEVA	96R301B71
VEWH		W7X8ZEV	96P057A71
VEWH		W7X8ZEV	96R301B71
VEWH		W7X8ZEVA	96R301B71
VEWVX		W7X8ZEV	96P057A71
VEWVX		W7X8ZEV	96P056A71
VEWVX		W7X8ZEV	96P152A71
VEWVX		W7X8ZEV	96R301B71
VEWVX		W7X8ZEVA	96R301B71

Legend of Symbols
Legenda dos símbolos

BA = Printed Circuit Board
Placa de circuito impresso

CB = Circuit Breaker
Disjuntor

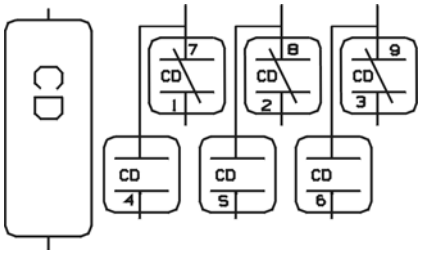

CD = Time Delay Relay
Relé de ação retardada

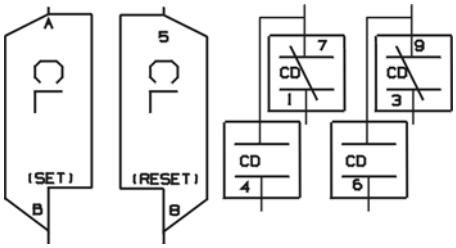

CL = Latch Relay
Relé de trava

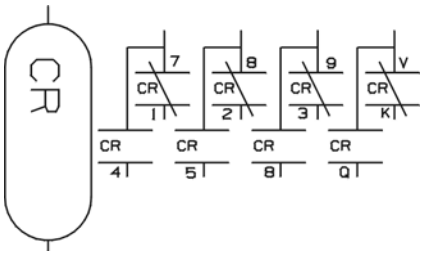

CR = Relay
Relé

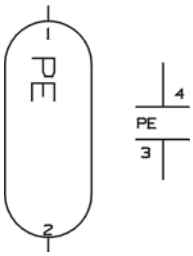

CP = Photo-Eye
Fotoelétrico

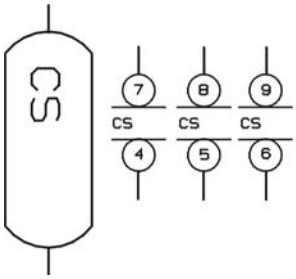

CS = Contactor/Motor Starter
Contator/Arranque do Motor

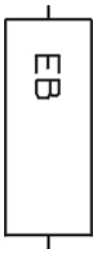

EB = Audible Signal
Sinal Sonoro

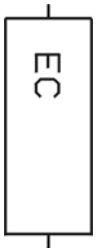

EC = Clutch
Embreagem

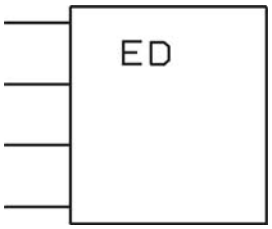

ED = Electronic Display
Tela eletrônica

EF = Fuse
Fusível

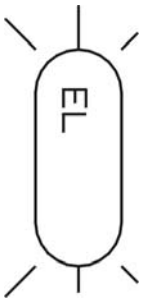

EL = Light
Luz

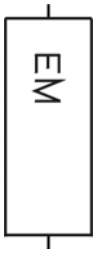

EM = Electro Magnatic Solenoid
Solenoide eletromagnético

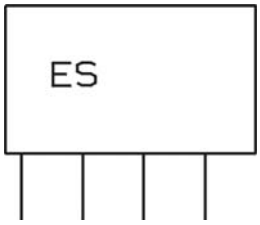

ES = Electronic Power Supply
Fonte de alimentação eletrônica

ET = Thermal Overload
Sobrecarga térmica

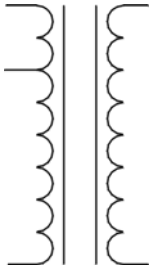

EX = Transformer
Transformador

KB = Keyboard/Keypad
Teclado/Teclado

MN = Electronic Monitor
Monitor eletrônico

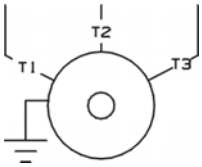

MR = Motor
Motor

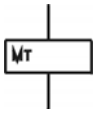

MT = Board Connector
Conector da placa

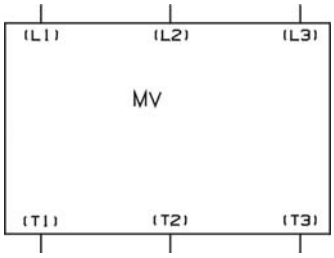

MV = Motor Inverter
Inversor do Motor

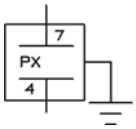

PX = Proximity Switch
Sensor de proximidade

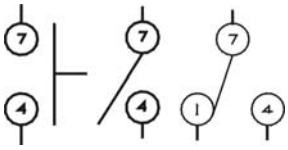

SH = Switch Hand Operated
Interruptor, Acionado à mão

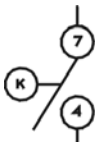

SK = Switch Key Operated
Interruptor, Acionado por teclado

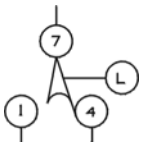

SL = Switch Level Operated
Interruptor, Acionado por nível

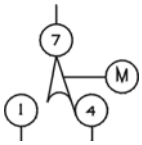

SM = Switch Mechanically Operated
Interruptor, Acionado mecanicamente

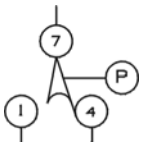

SP = Switch Pressure Operated
Interruptor, Acionado por pressão

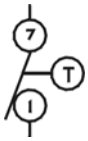

ST = Switch Temperature Operated
Interruptor, Acionado por temperatura

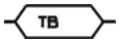

TB = Terminal Block
Bloco terminal

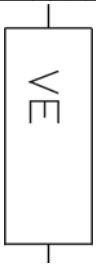

VE = Valve Electrically Operated
Válvula, Acionada por energia elétrica

WC = Wiring Connector
Conector de fiação elétrica

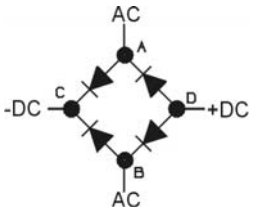

ZF = Rectifier
Retificador

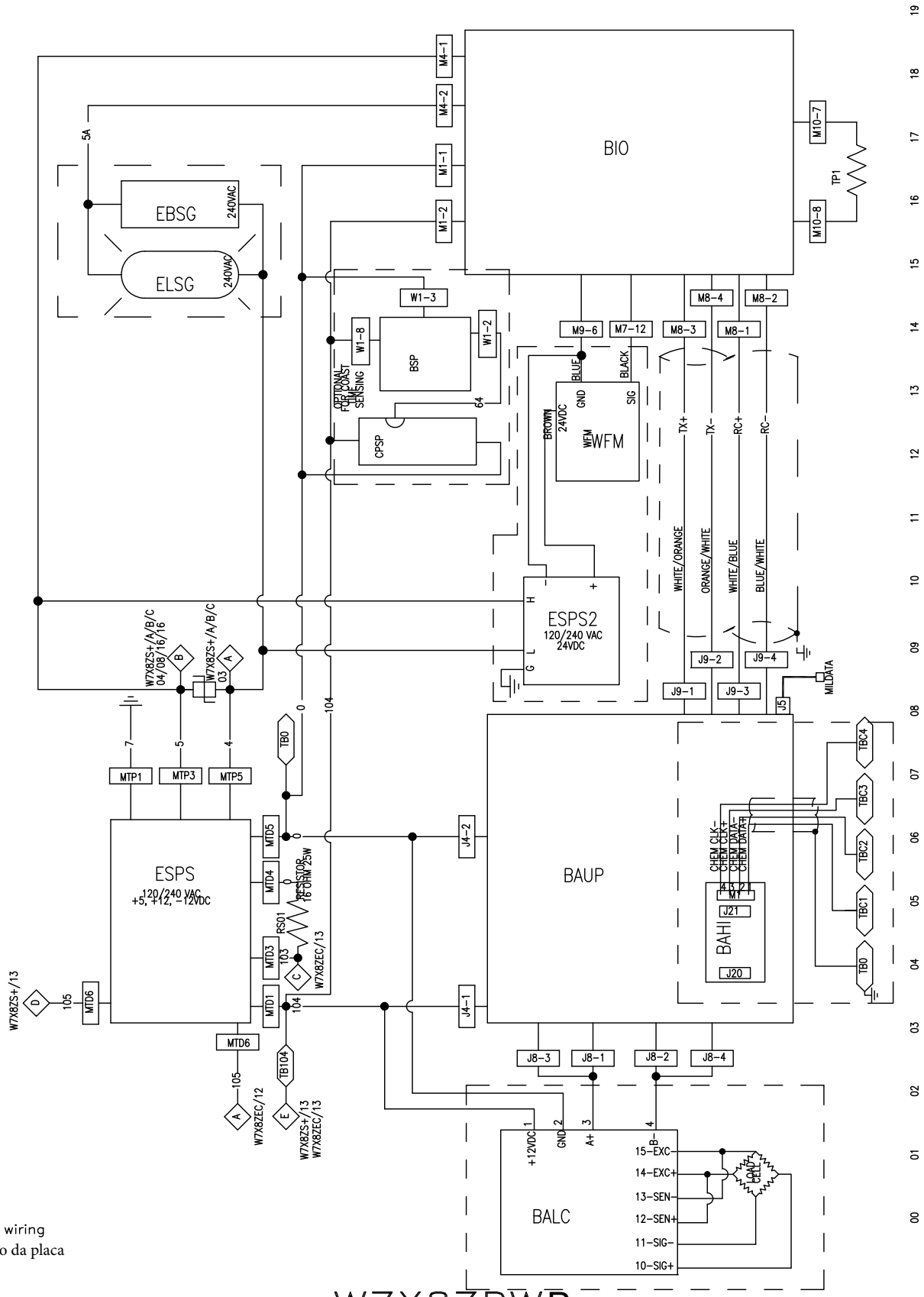

board wiring
Fiação da placa

W7X8ZBWP

PELLERIN MILNOR CORPORATION

2021034A

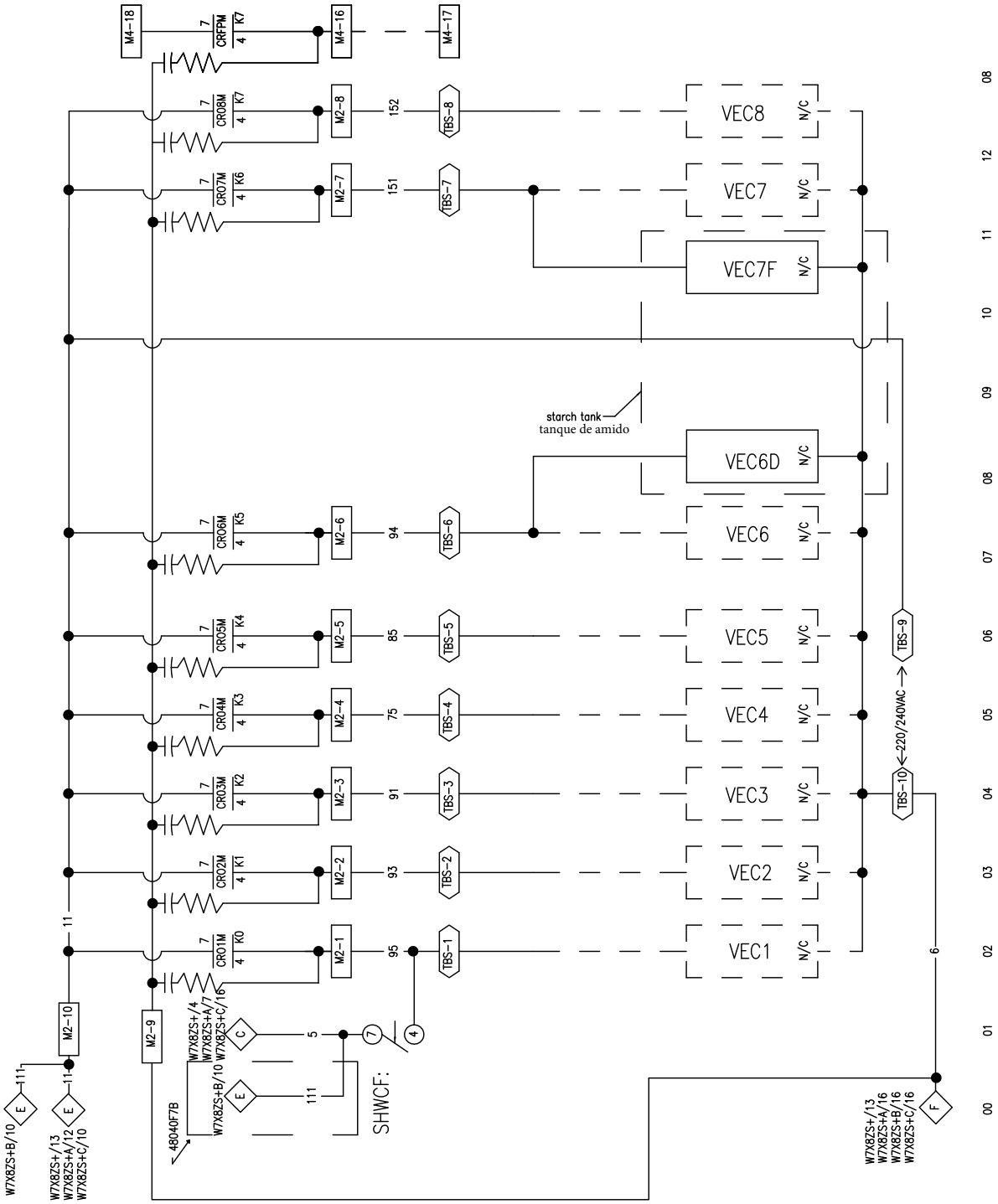

flushing supplies

Materiais para lavagem

W7X8ZCFP

PELLERIN MILNOR CORPORATION

2023052A

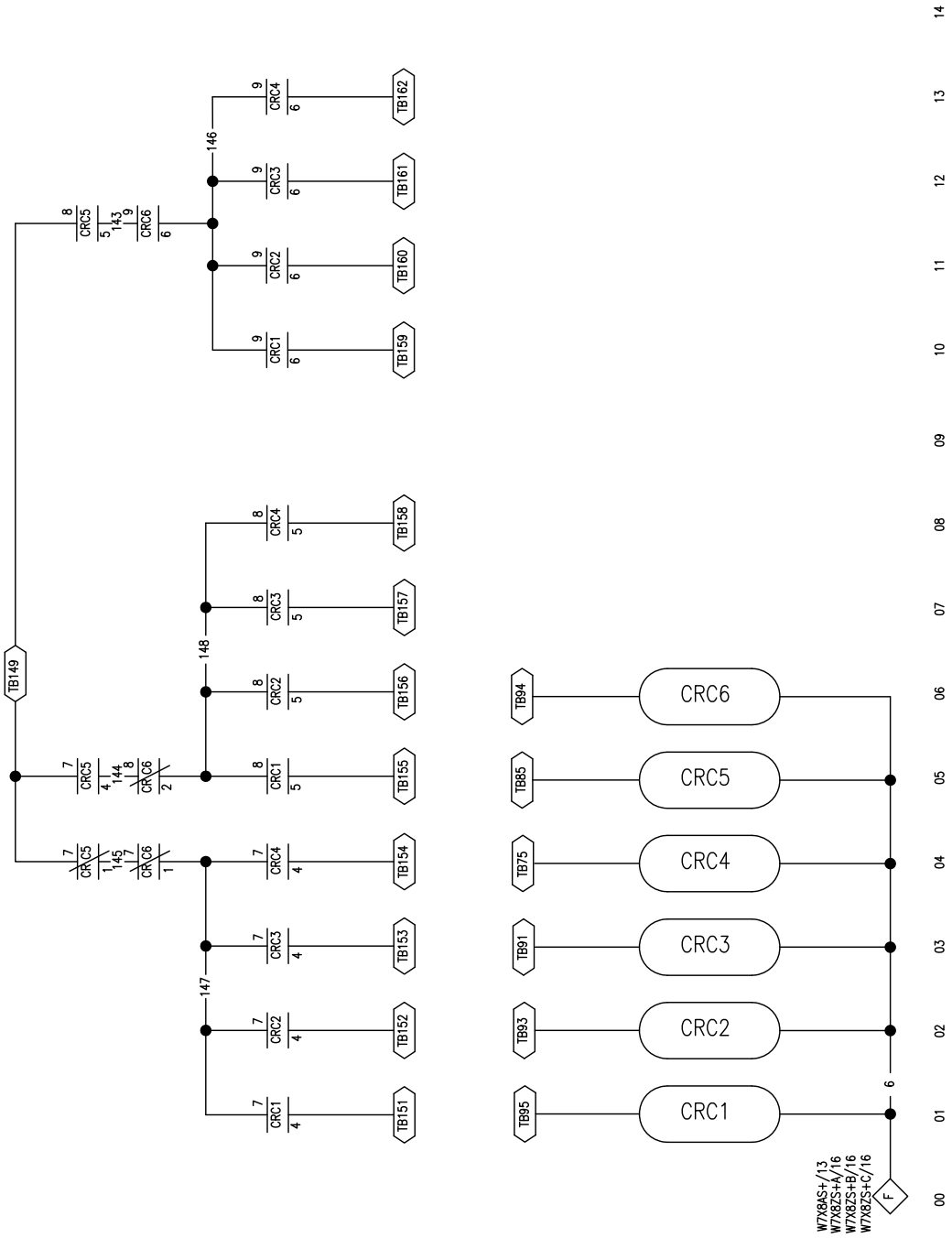

12 flushing supplies

12 produtos químicos

W7X8ZCMP

PELLERIN MILNOR CORPORATION

2013133A

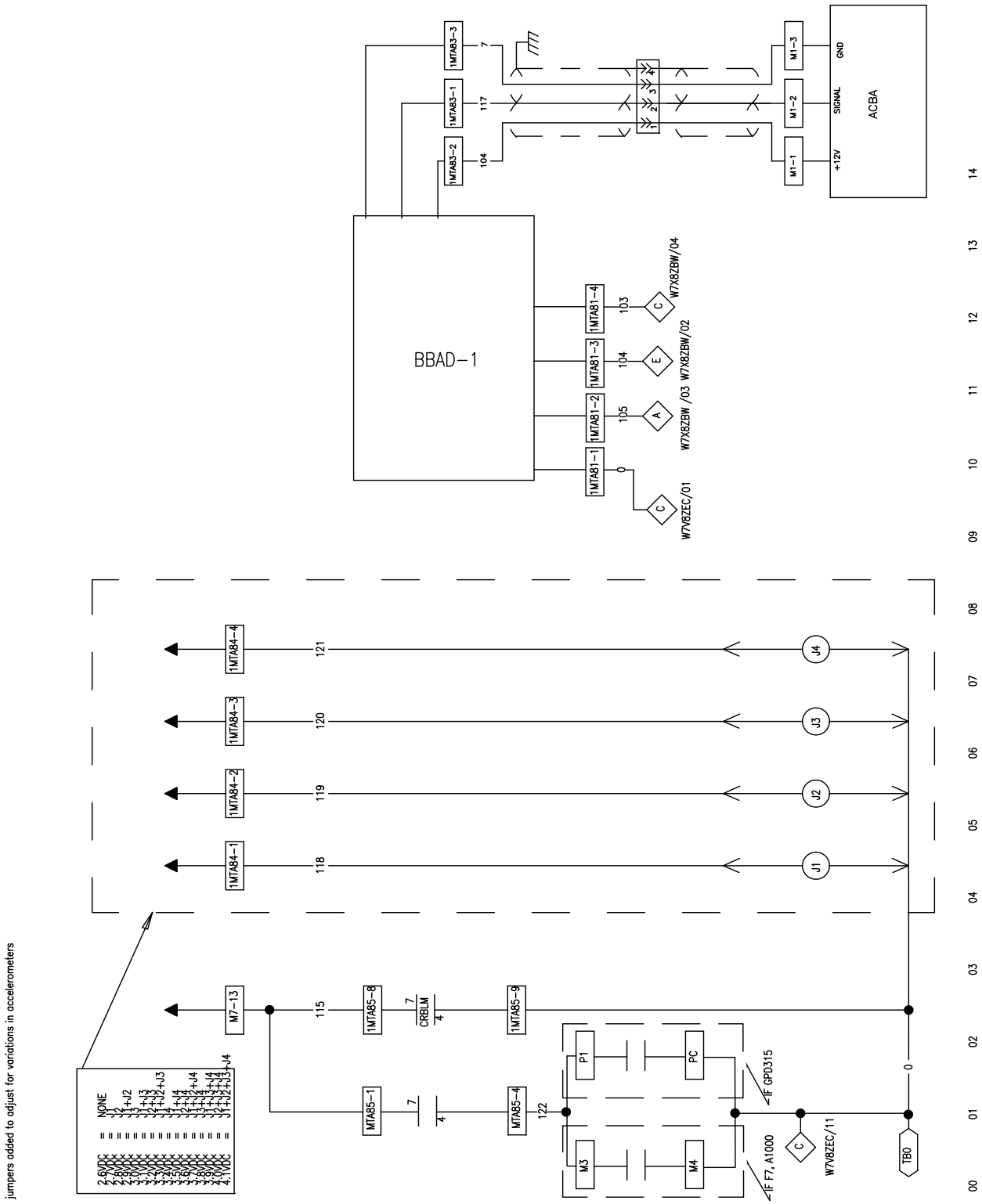

extract speed limit control

controle de limite da velocidade de extração

W7X8ZEC P

PELLERIN MILNOR CORPORATION

2023014A

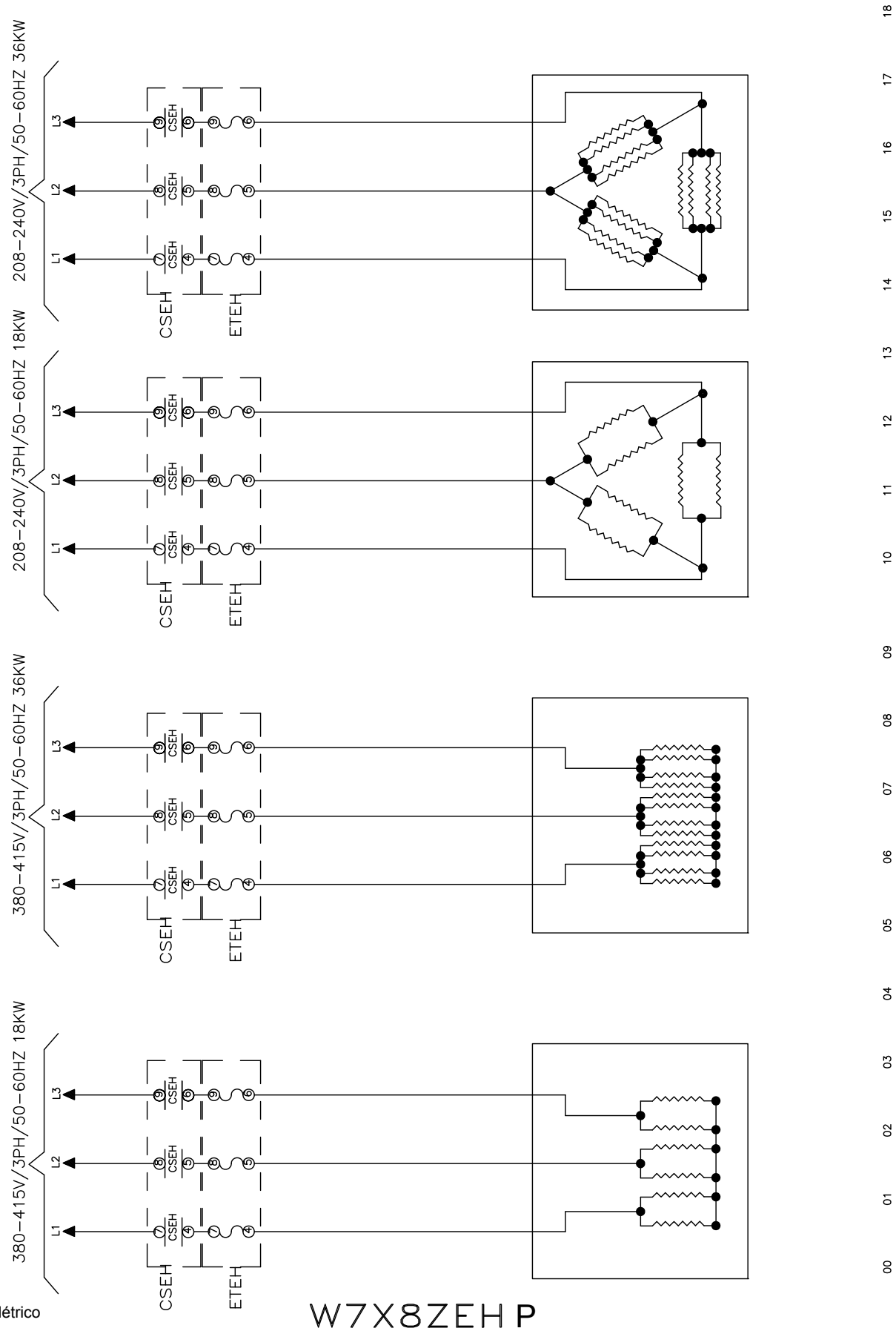

electric heat

aquecimento elétrico

W7X8ZEH P

PELLERIN MILNOR CORPORATION

2013133A

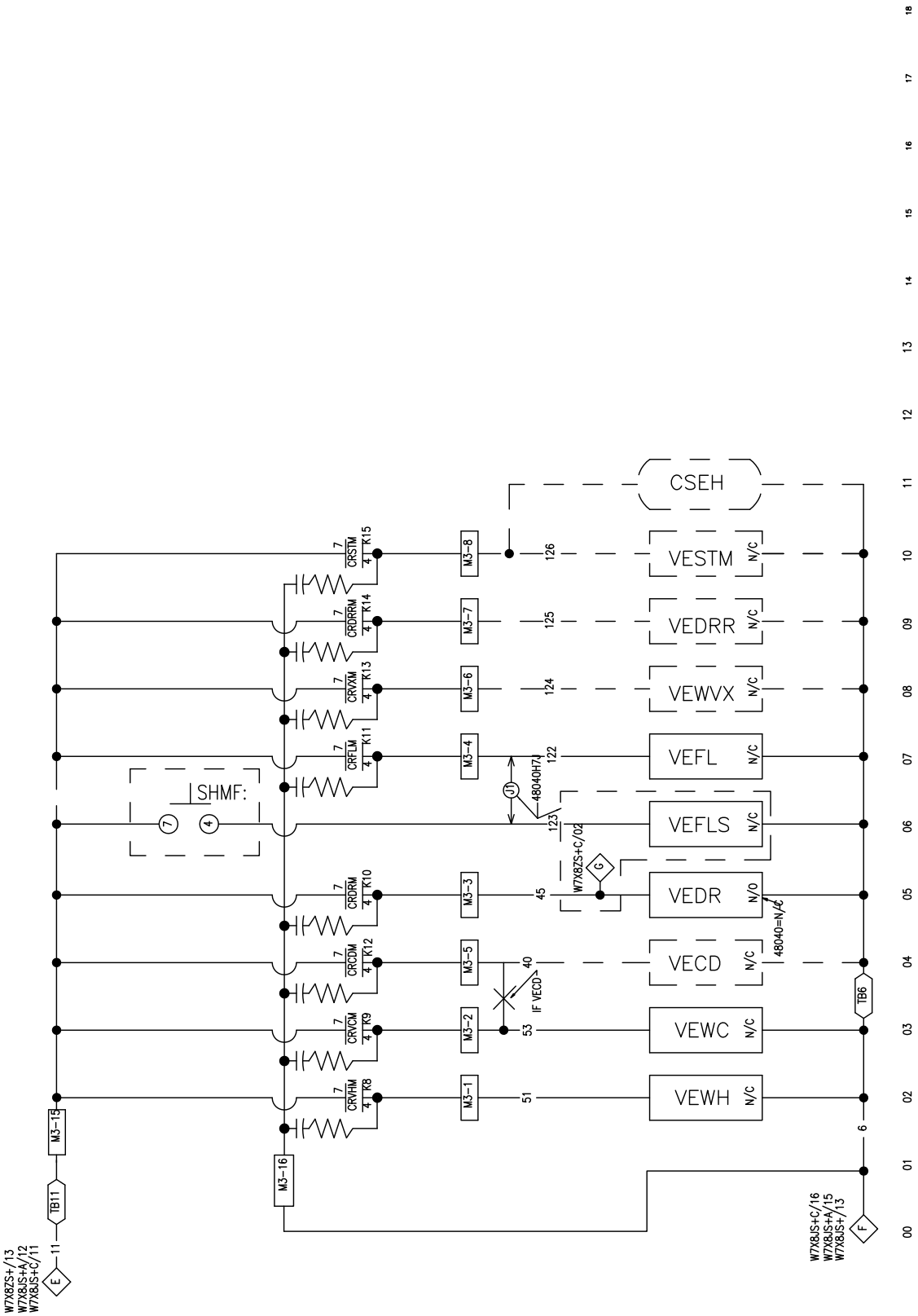

MWF27Z8, 45Z8, 63Z7, & 77Z7
electric valves
Válvulas elétricas

W7X8ZEV P

PELLERIN MILNOR CORPORATION

2013133A

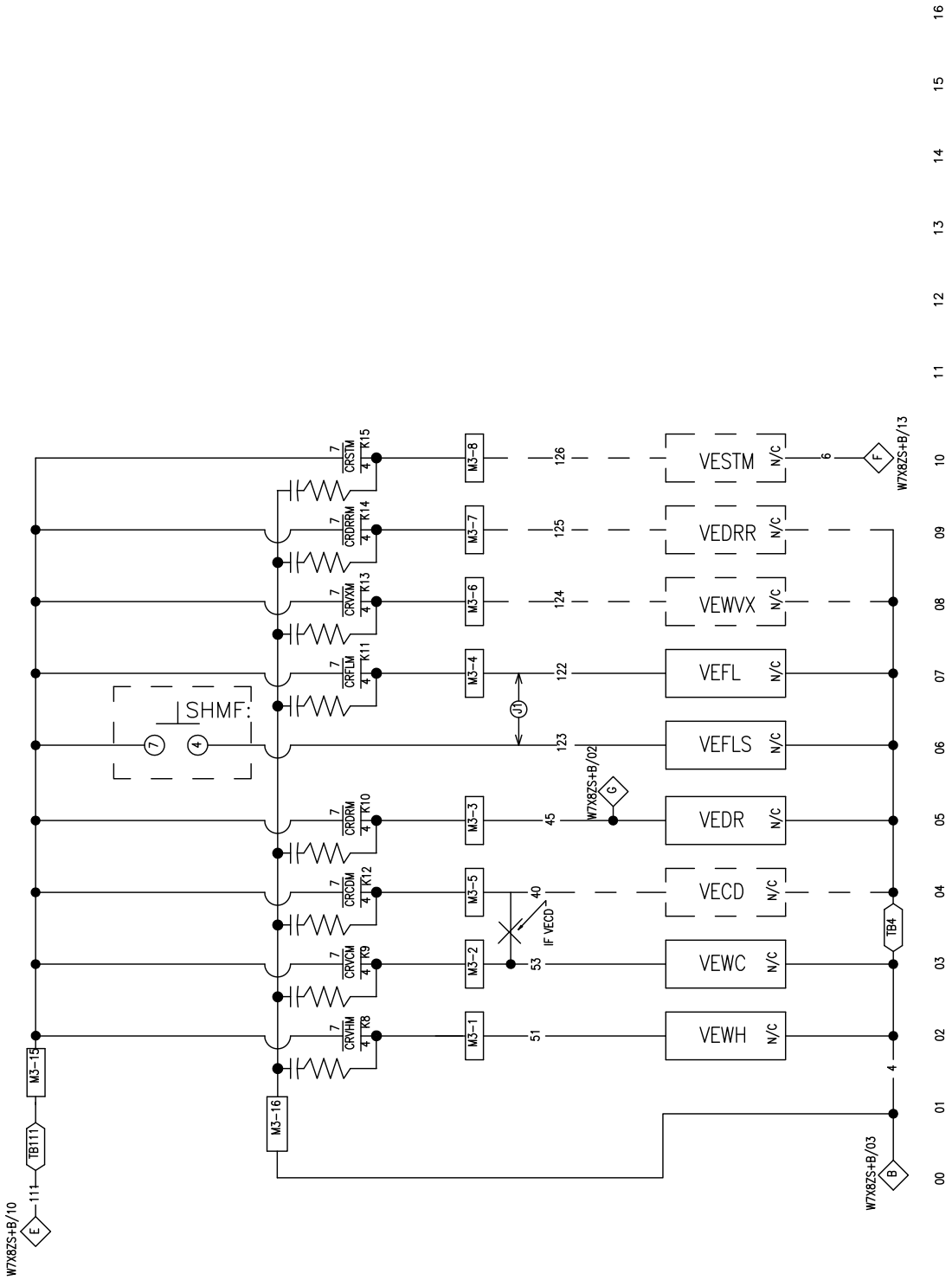

48040F7D
electric valves

Válvulas elétricas

W7X8ZEVA P

PELLERIN MILNOR CORPORATION

2014253A

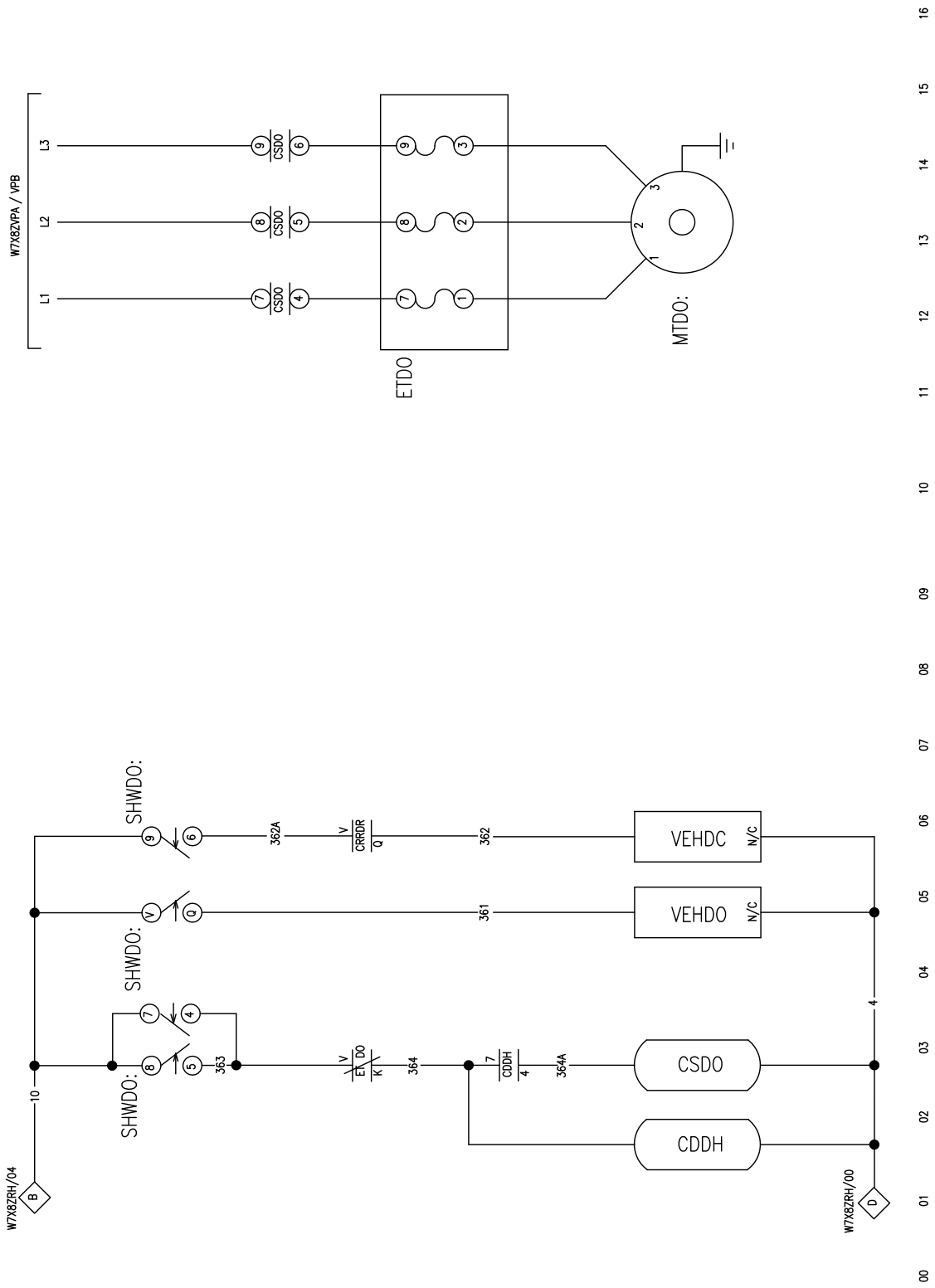

hydraulic door
porta hidráulica

W7X8ZHDP

PELLERIN MILNOR CORPORATION

2019034A

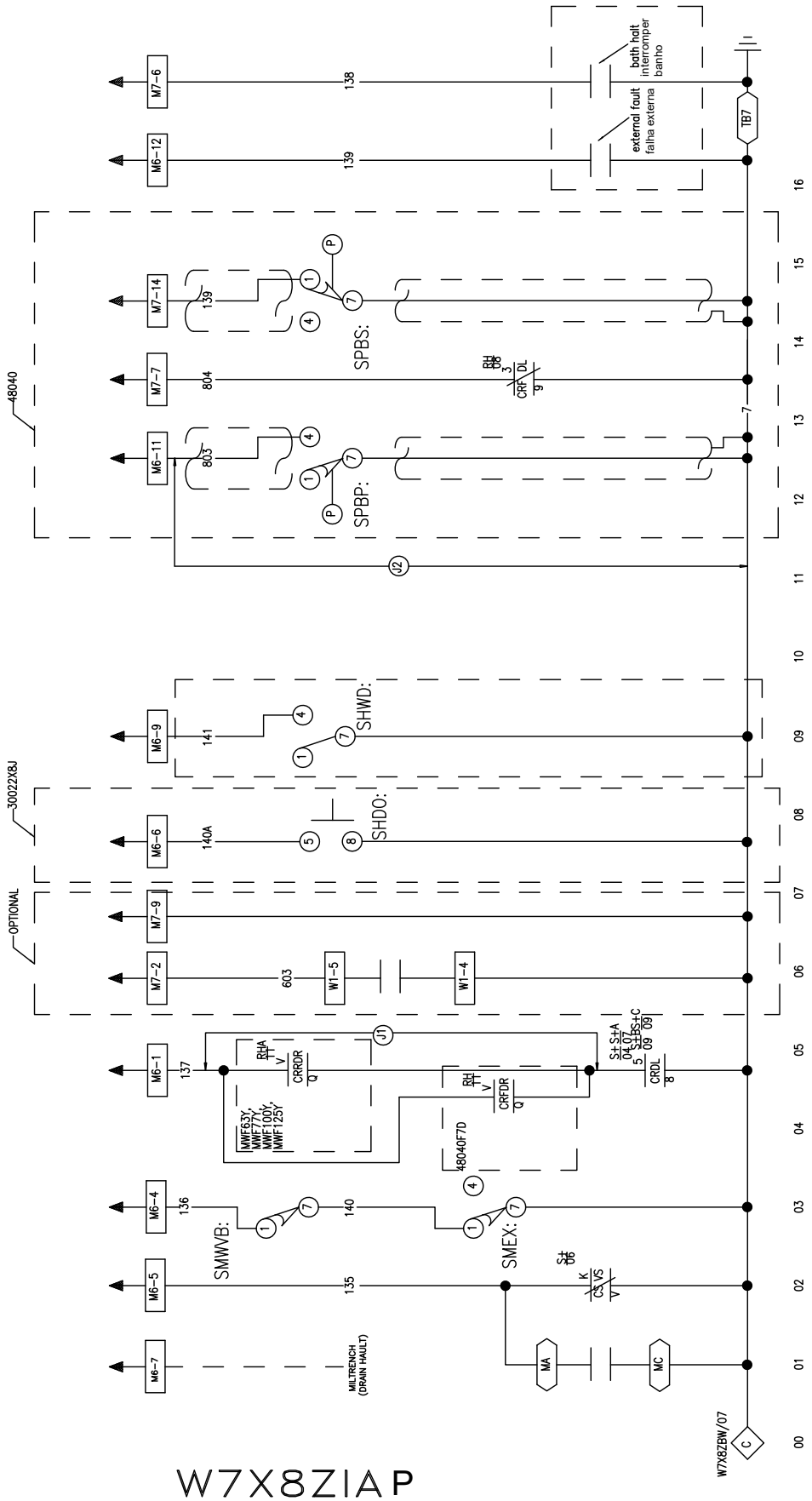

microprocessor inputs
Entradas de microprocessador

W7X8ZIAP

PELLERIN MILNOR CORPORATION

2023052A

REFER TO THE CONNECTION DIAGRAM OF THE TRANSFORMERS FOR THE CORRESPONDING WIRE NUMBERS

CONSULTE O DIAGRAMA DE CONEXÃO DOS TRANSFORMADORES PARA OS NÚMEROS DE FIO CORRESPONDENTES

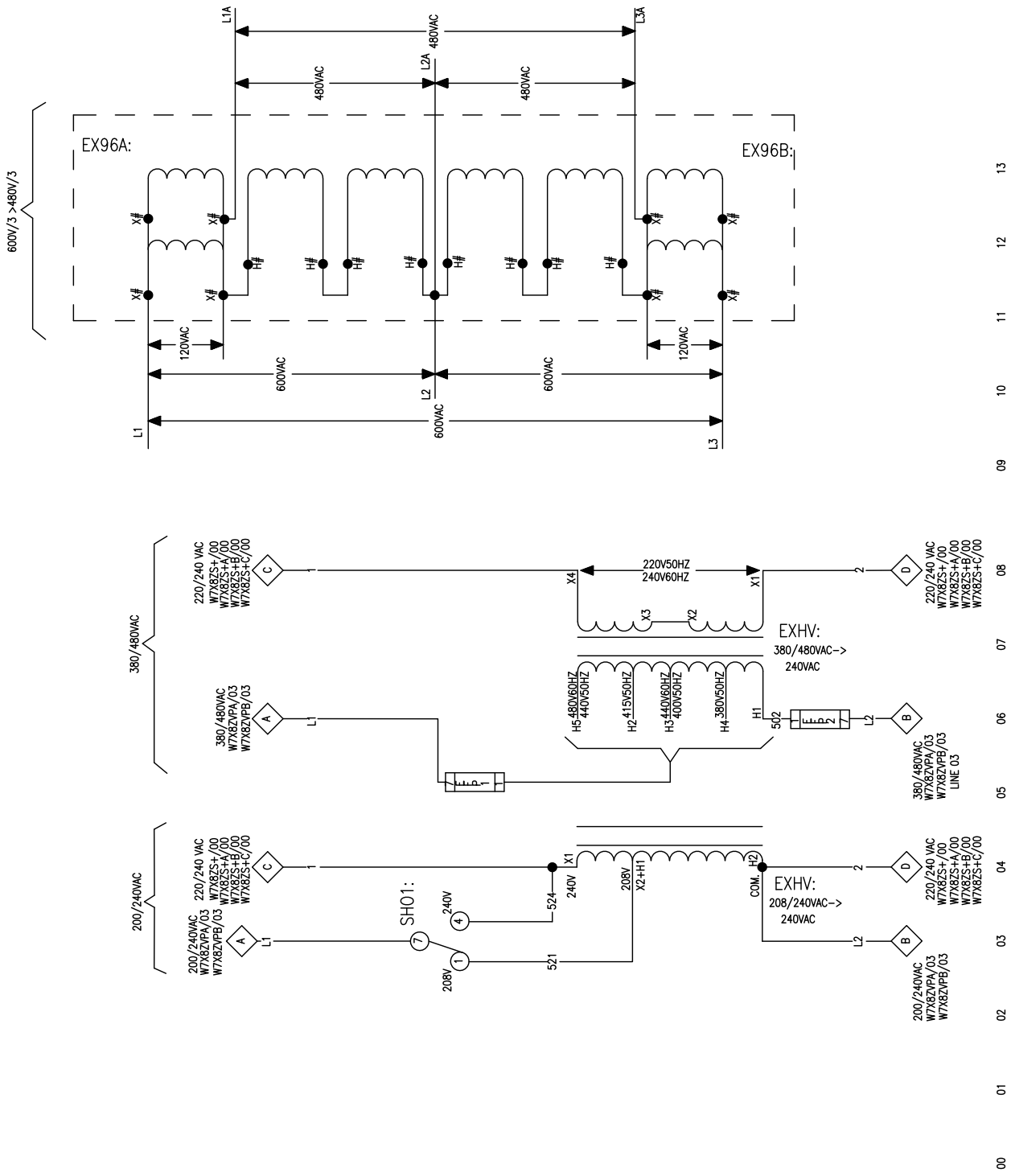

control transformer
transformador de controle

W7X8ZLVP

PELLERIN MILNOR CORPORATION

2021073A

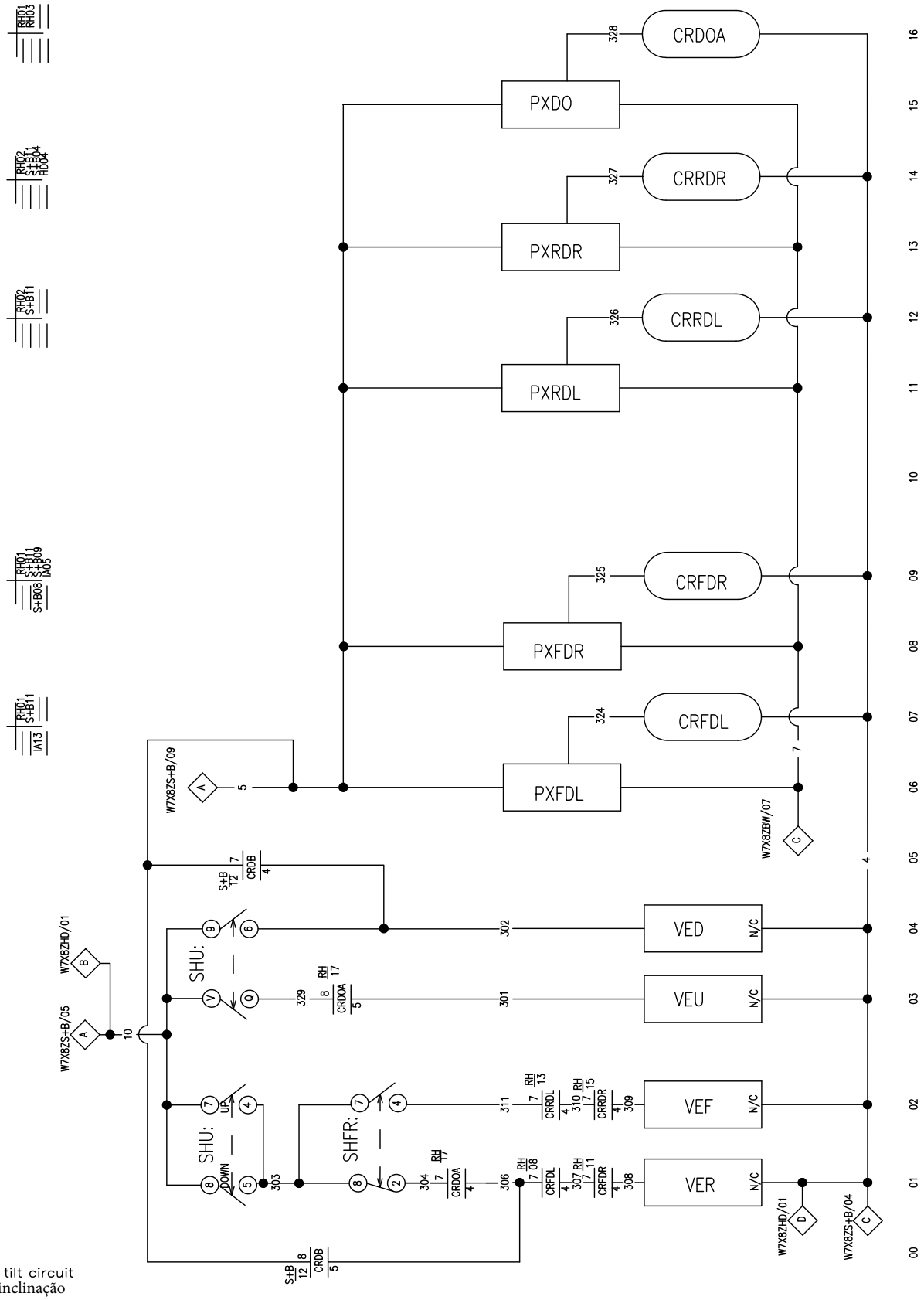

48040F7D tilt circuit
circuito de inclinação

W7X8ZRHP

PELLERIN MILNOR CORPORATION

2020392A

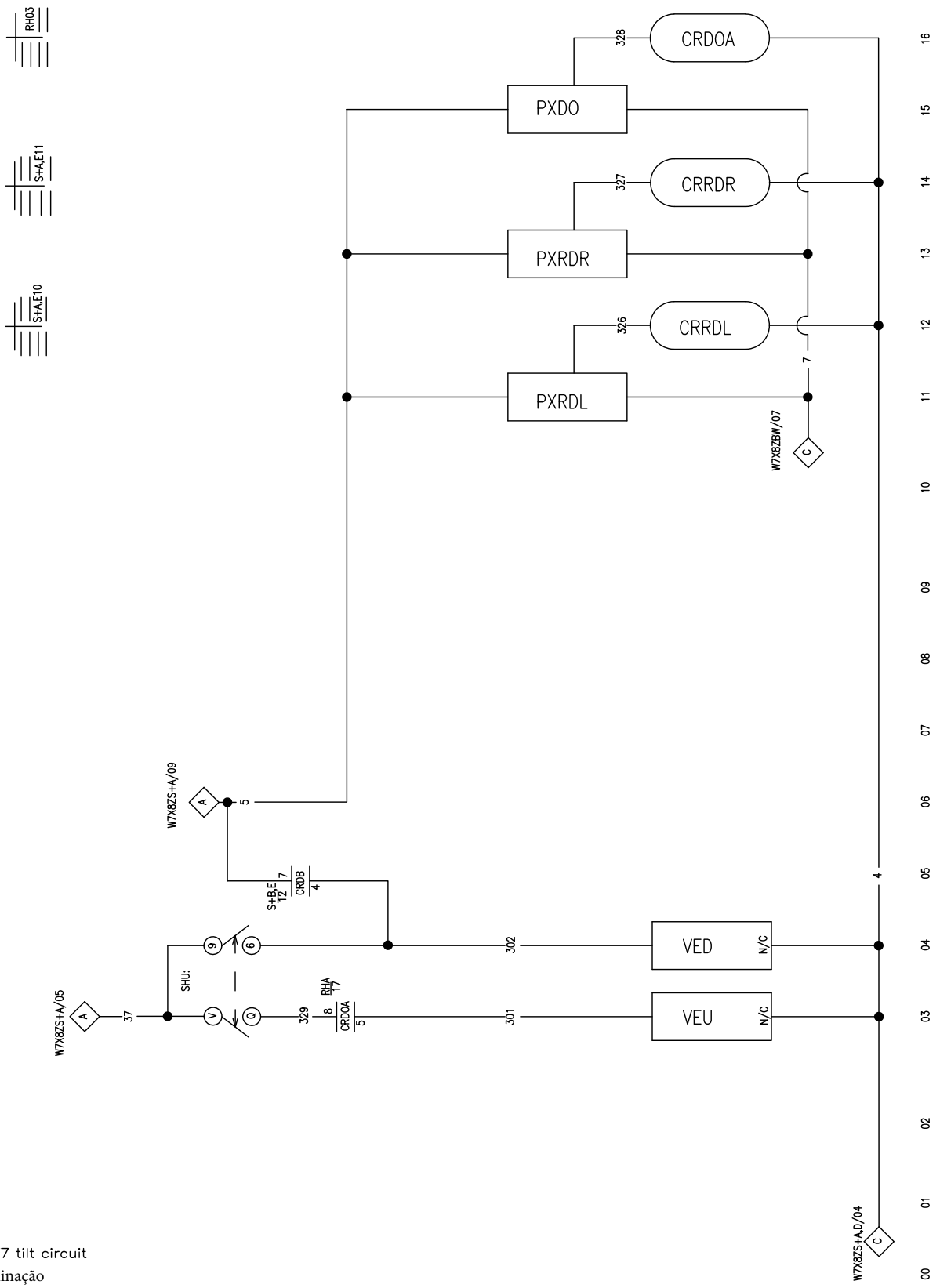

MWF63—125Y7 tilt circuit
circuito de inclinação

W7X8ZRHAP

PELLERIN MILNOR CORPORATION

2020392A

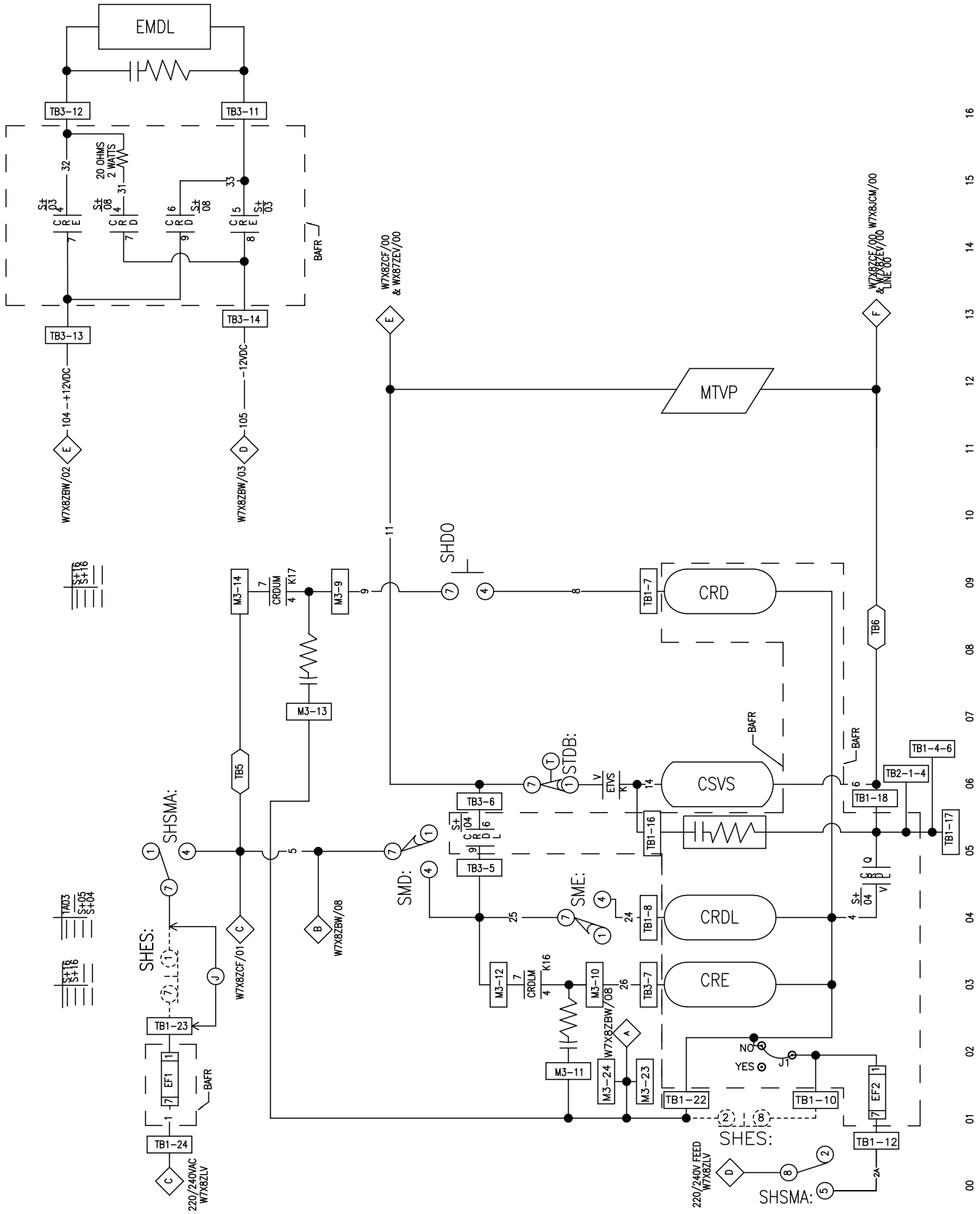

MWF27Z8
start circuit
启动电路
Circuito de partida

W7X8ZS+X

PELLERIN MILNOR CORPORATION

2025104A

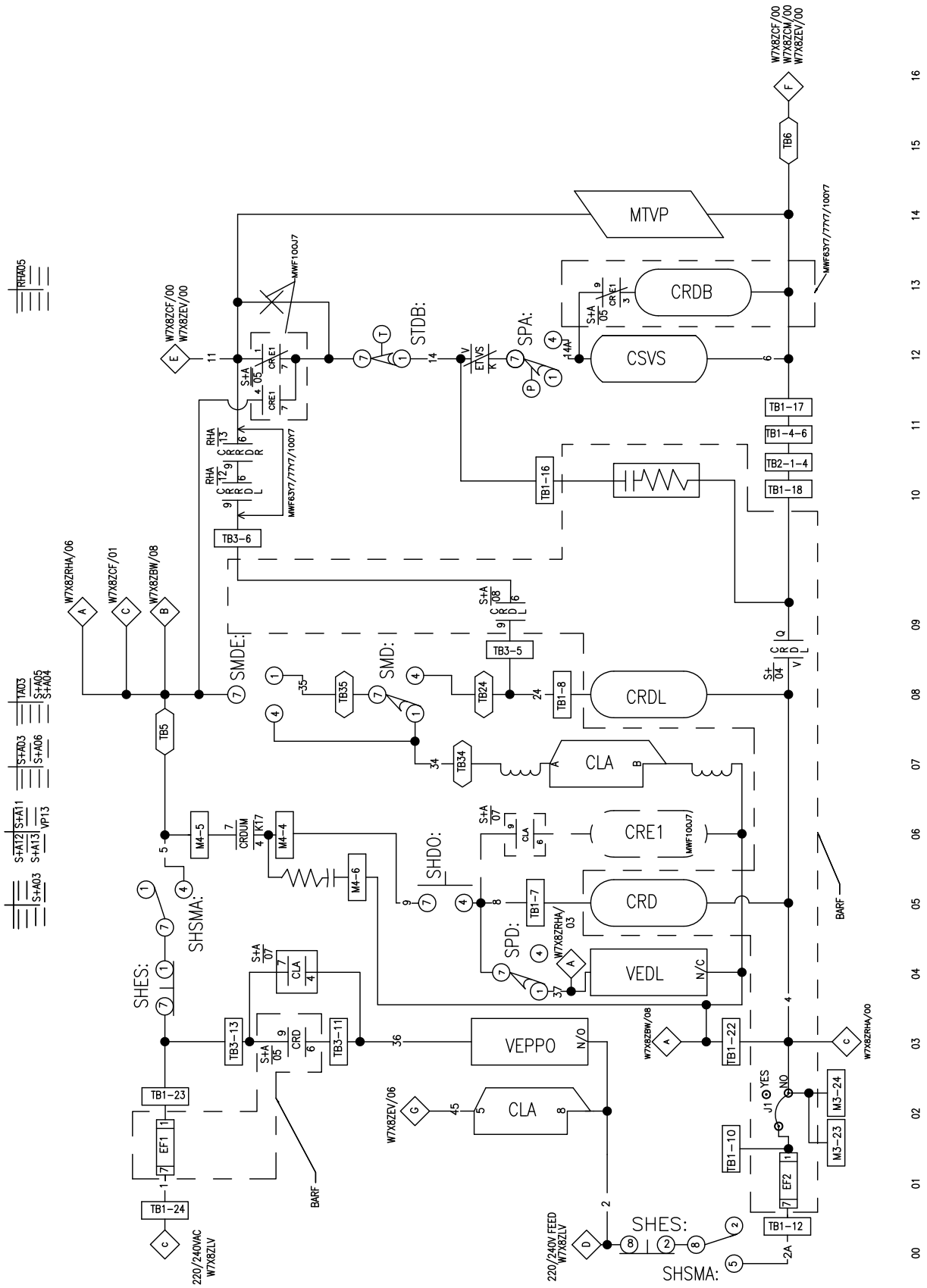

W7X8ZS+AP

MWF45Z8, 63Z7, 77Z7, 100Z/Y7
start circuit
Circuito de partida

PELLERIN MILNOR CORPORATION

2019034A

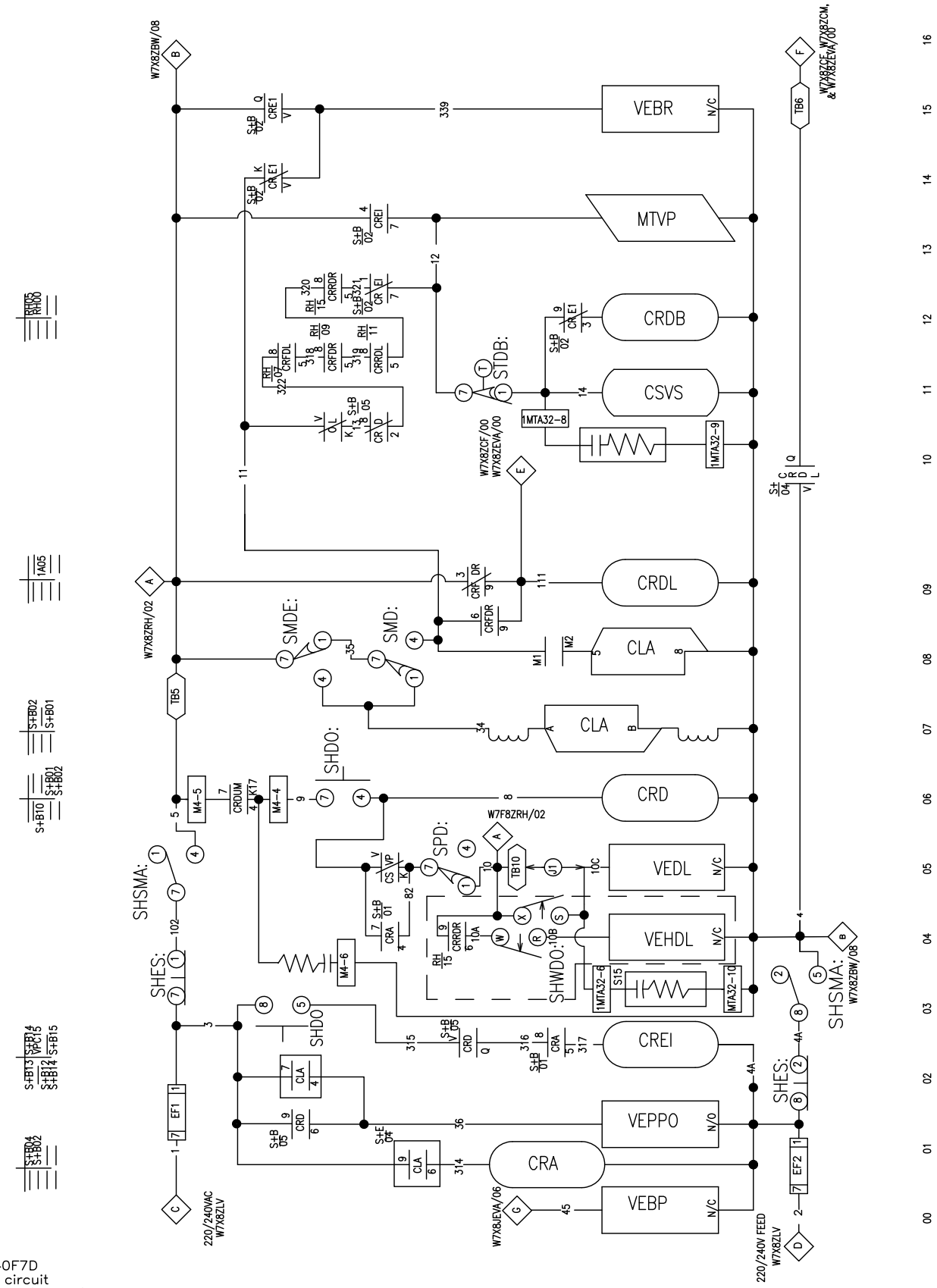

48040F7D
start circuit
Circuito de partida

W7X8ZS+BP

PELLERIN MILNOR CORPORATION

2019034A

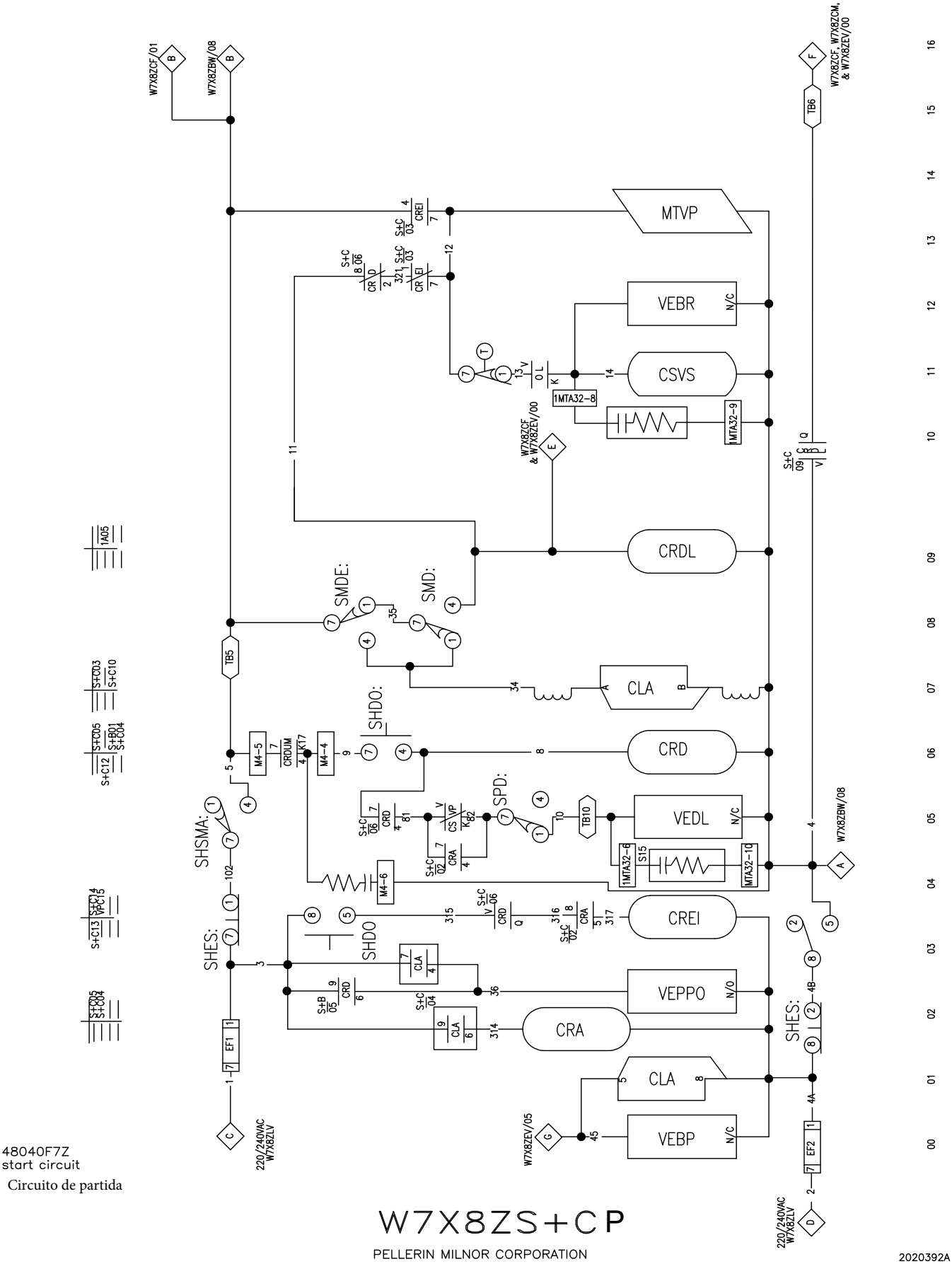
MTVP
VEBR
CSVS
CRDL
CLA
CRD
VEDL
CREI
VEPPO
CRA
VEBP
SMDE:
SMD:
SHDO:
SPD:
SHSMA:
SHES:
SHDO
TB5
TB6
TB10
M4-5
M4-4
M4-6
EF1
EF2
1MTA32-8
1MTA32-9
MTA32-10
W7X8ZCF/01
W7X8ZBW/08
W7X8ZCF, W7X8ZCM, & W7X8ZEV/00
W7X8ZCF & W7X8ZEV/00
220/240VAC W7X8ZLV
W7X8ZEV/05
48040F7Z
start circuit
Circuito de partida
W7X8ZS+CP
PELLERIN MILNOR CORPORATION
2020392A

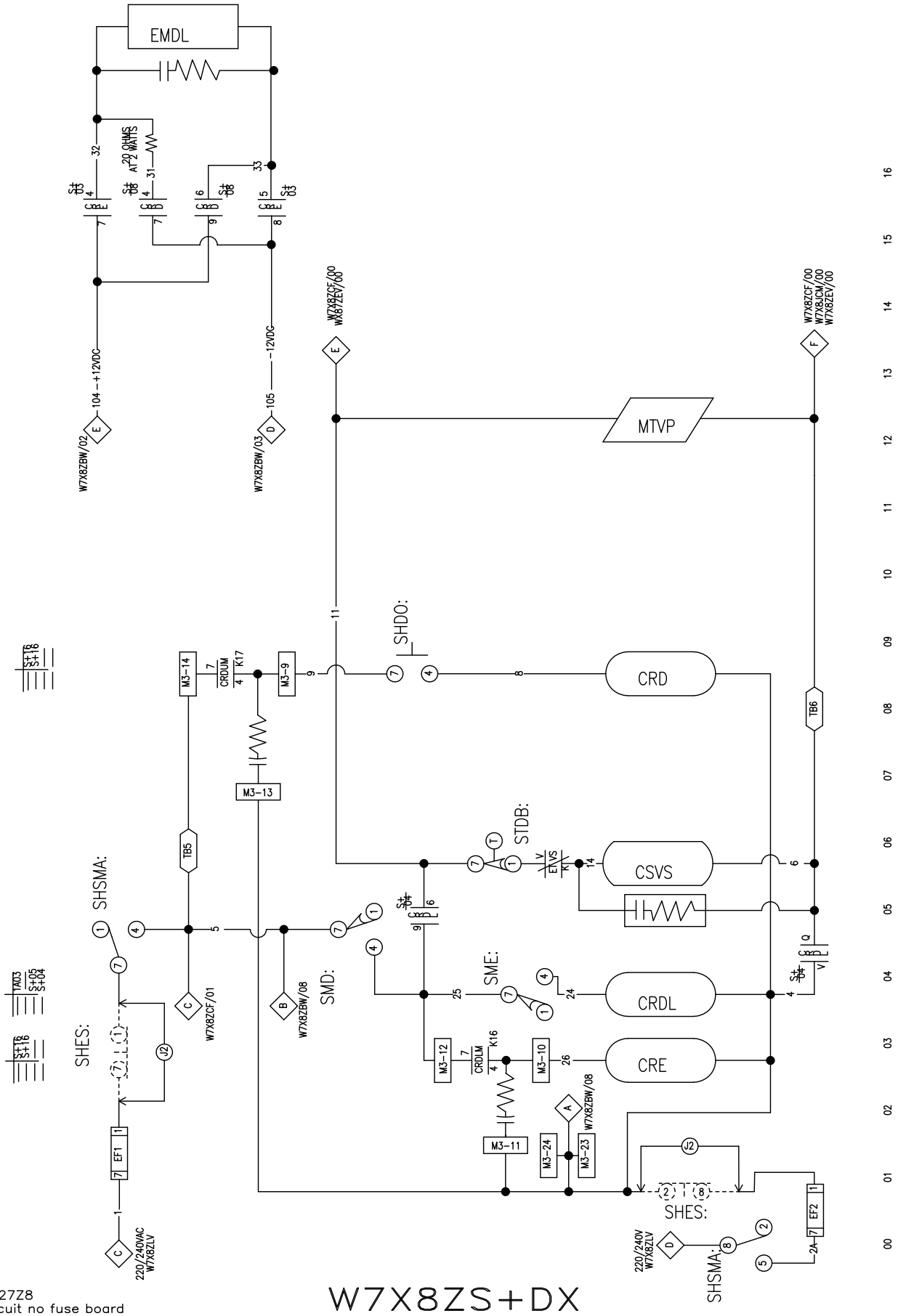

MWF18/27Z8
start circuit no fuse board
启动电路无保险丝板
iniciar circuito sem placa de fusíveis

W7X8ZS+DX

PELLERIN MILNOR CORPORATION

2025104A

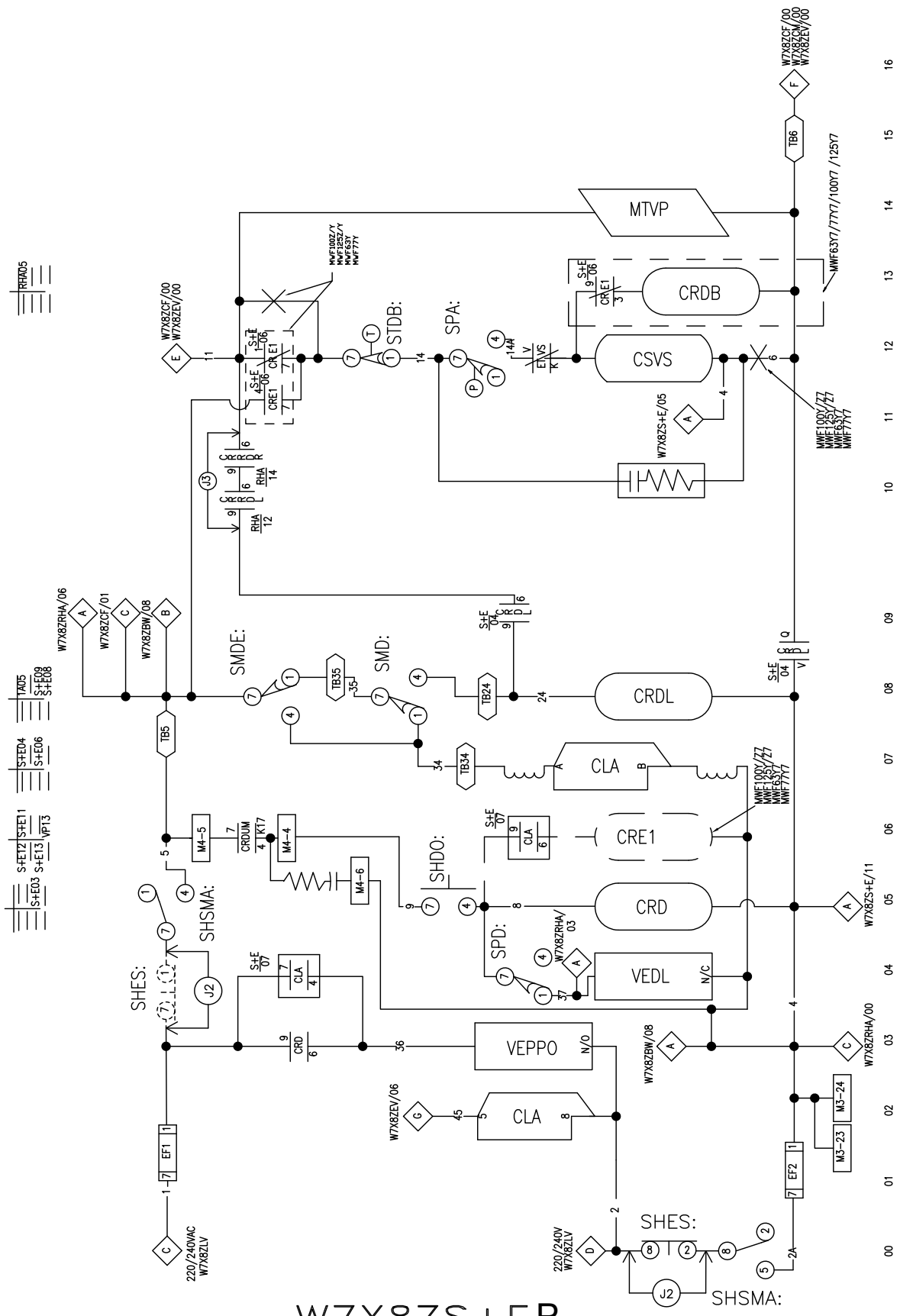

W7X8ZS+EP

MWF45Z8, 63Z7, 77Z7, 100Z/Y7, 125Z/Y7
start circuit, no fuse board
Circuito de partida

PELLERIN MILNOR CORPORATION

2020392A

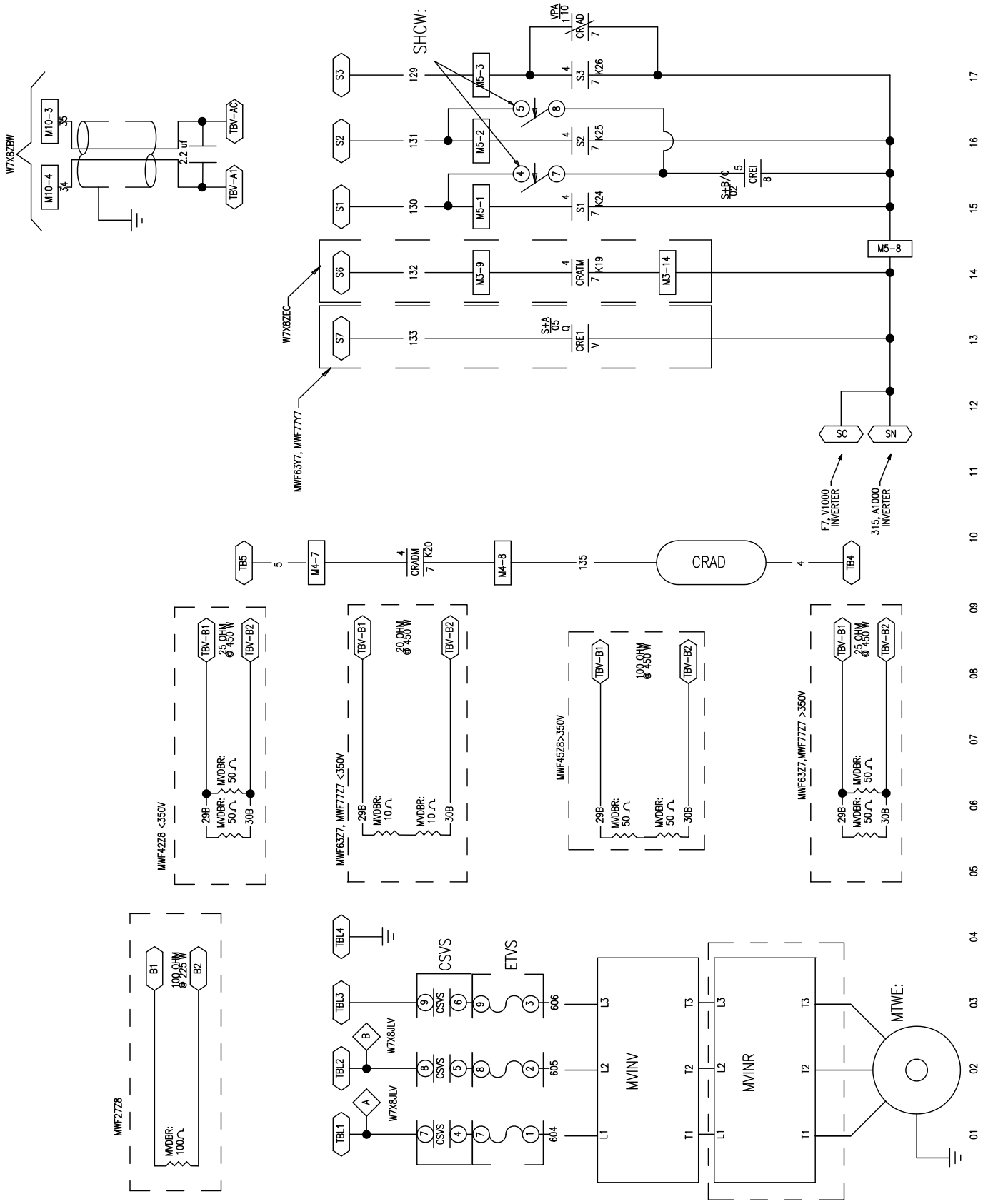

MWF18/27/45Z8, 63/77Z/Y7
inverter
逆?器
inversor

W7X8ZVPAX

PELLERIN MILNOR CORPORATION

2024473A

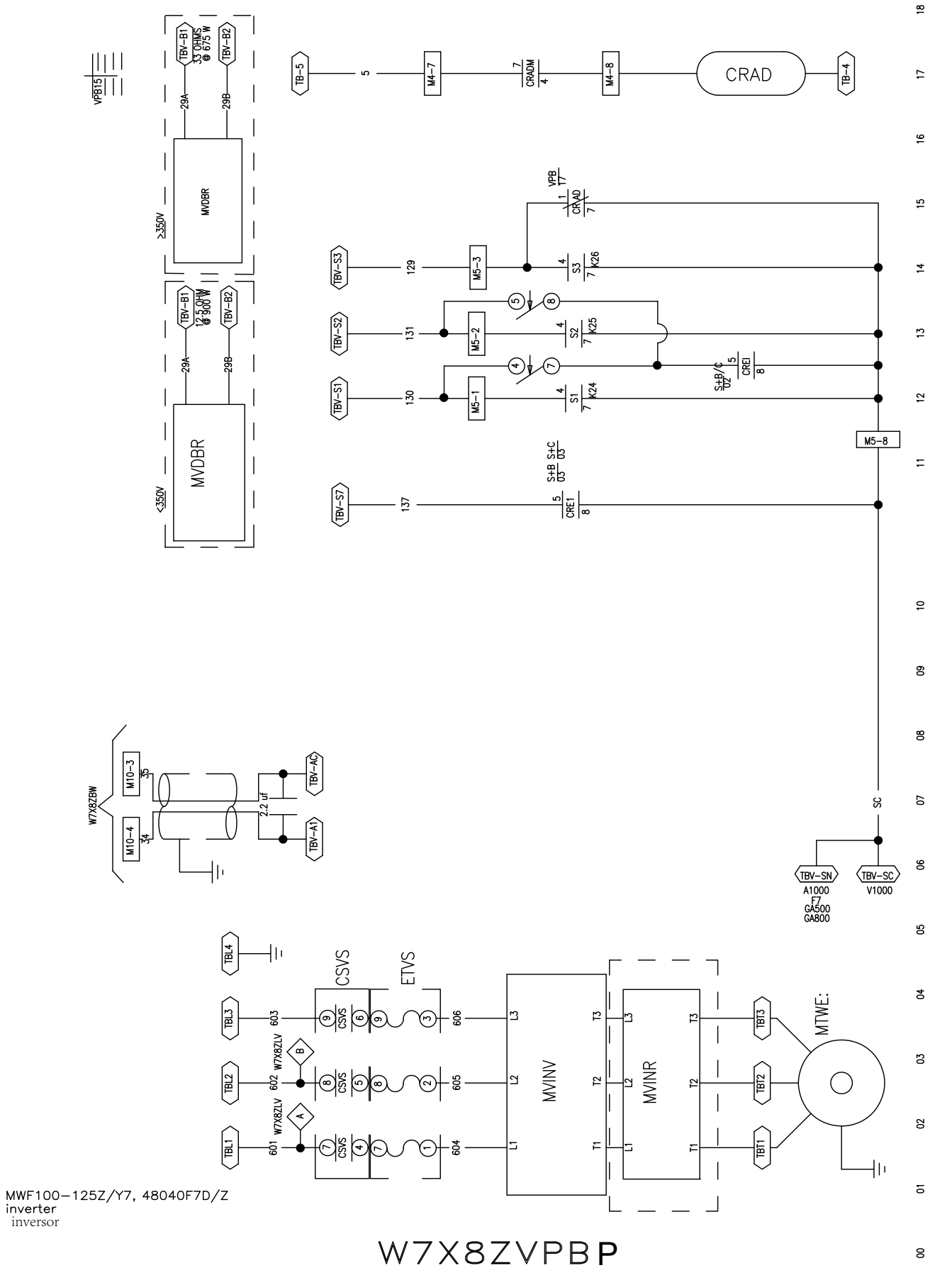

MWF100-125Z/Y7, 48040F7D/Z
inverter
inversor

W7X8ZVPBP

PELLERIN MILNOR CORPORATION

2021332A