Published Manual Number/ECN: MAIM7E42AE/2016235A
- **Publishing System: TPAS2**
- **Access date: 06/13/2016**
- **Document ECNs: Latest**

Installation

M9V4232C,L,R; MMV4232C,L,R; MXV4232C,L,R MMT4232C,L,R; MXT4232C,L,R MMT4232C,L,R; MXT4232C,L,R

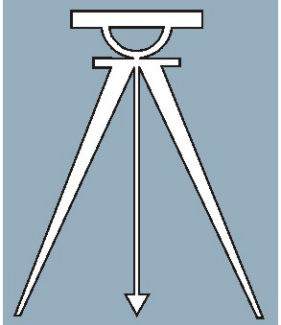

Read the separate safety manual before installing, operating, or servicing

PELLERIN MILNOR CORPORATION POST OFFICE BOX 400, KENNER, LOUISIANA 70063-0400, U.S.A.

Table of Contents
MAIM7E42AE/16235A

BIUUUS27 (Published) Book specs- Dates: 20051111 / 20051111 / 20060323 Lang: ENG01 Applic: PEU

Safety—Centrifugal Extractor

1. General Safety Requirements—Vital Information for Management Personnel [Document BIUUUS04]

Incorrect installation, neglected preventive maintenance, abuse, and/or improper repairs, or changes to the machine can cause unsafe operation and personal injuries, such as multiple fractures, amputations, or death. The owner or his selected representative (owner/user) is responsible for understanding and ensuring the proper operation and maintenance of the machine. The owner/user must familiarize himself with the contents of all machine instruction manuals. The owner/user should direct any questions about these instructions to a Milnor® dealer or the Milnor® Service department.

Most regulatory authorities (including OSHA in the USA and CE in Europe) hold the owner/user ultimately responsible for maintaining a safe working environment. Therefore, the owner/user must do or ensure the following:

- recognize all foreseeable safety hazards within his facility and take actions to protect his personnel, equipment, and facility;
- work equipment is suitable, properly adapted, can be used without risks to health or safety, and is adequately maintained;
- where specific hazards are likely to be involved, access to the equipment is restricted to those employees given the task of using it;
- only specifically designated workers carry out repairs, modifications, maintenance, or servicing;
- information, instruction, and training is provided;
- workers and/or their representatives are consulted.

Work equipment must comply with the requirements listed below. The owner/user must verify that installation and maintenance of equipment is performed in such a way as to support these requirements:

- control devices must be visible, identifiable, and marked; be located outside dangerous zones; and not give rise to a hazard due to unintentional operation;
- control systems must be safe and breakdown/damage must not result in danger;
- work equipment is to be stabilized;
- protection against rupture or disintegration of work equipment;
- guarding, to prevent access to danger zones or to stop movements of dangerous parts before the danger zones are reached. Guards to be robust; not give rise to any additional hazards; not be easily removed or rendered inoperative; situated at a sufficient distance from the danger zone; not restrict view of operating cycle; allow fitting, replacing, or maintenance by restricting access to relevant area and without removal of guard/protection device;
- suitable lighting for working and maintenance areas;
- maintenance to be possible when work equipment is shut down. If not possible, then protection measures to be carried out outside danger zones;
- work equipment must be appropriate for preventing the risk of fire or overheating; discharges of gas, dust, liquid, vapor, other substances; explosion of the equipment or substances in it.

1.1. **Laundry Facility**—Provide a supporting floor that is strong and rigid enough to support–with a reasonable safety factor and without undue or objectionable deflection–the weight of the fully loaded machine and the forces transmitted by it during operation. Provide sufficient clearance for machine movement. Provide any safety guards, fences, restraints, devices, and verbal and/or posted restrictions necessary to prevent personnel, machines, or other moving machinery from accessing the machine or its path. Provide adequate ventilation to carry away heat and vapors. Ensure service connections to installed machines meet local and national safety standards, especially regarding the electrical disconnect (see the National Electric Code). Prominently post safety information, including signs showing the source of electrical disconnect.

1.2. **Personnel**—Inform personnel about hazard avoidance and the importance of care and common sense. Provide personnel with the safety and operating instructions that apply to them. Verify that personnel use proper safety and operating procedures. Verify that personnel understand and abide by the warnings on the machine and precautions in the instruction manuals.

1.3. **Safety Devices**—Ensure that no one eliminates or disables any safety device on the machine or in the facility. Do not allow machine to be used with any missing guard, cover, panel or door. Service any failing or malfunctioning device before operating the machine.

1.4. **Hazard Information**—Important information on hazards is provided on the machine safety placards, in the Safety Guide, and throughout the other machine manuals. **Placards must be kept clean so that the information is not obscured. They must be replaced immediately if lost or damaged. The Safety Guide and other machine manuals must be available at all times to the appropriate personnel.** See the machine service manual for safety placard part numbers. Contact the Milnor Parts department for replacement placards or manuals.

1.5. **Maintenance**—Ensure the machine is inspected and serviced in accordance with the norms of good practice and with the preventive maintenance schedule. Replace belts, pulleys, brake shoes/disks, clutch plates/tires, rollers, seals, alignment guides, etc. before they are severely worn. Immediately investigate any evidence of impending failure and make needed repairs (e.g., cylinder, shell, or frame cracks; drive components such as motors, gear boxes, bearings, etc., whining, grinding, smoking, or becoming abnormally hot; bending or cracking of cylinder, shell, frame, etc.; leaking seals, hoses, valves, etc.) Do not permit service or maintenance by unqualified personnel.

2. Safety Alert Messages—Internal Electrical and Mechanical Hazards [Document BIUUUS11]

The following are instructions about hazards inside the machine and in electrical enclosures.

WARNING 1: Electrocution and Electrical Burn Hazards—Contact with electric power can kill or seriously injure you. Electric power is present inside the cabinetry unless the main machine power disconnect is off.

- Do not unlock or open electric box doors.
- Do not remove guards, covers, or panels.
- Do not reach into the machine housing or frame.
- Keep yourself and others off of machine.
- Know the location of the main machine disconnect and use it in an emergency to remove all electric power from the machine.

WARNING 2: Entangle and Crush Hazards—Contact with moving components normally isolated by guards, covers, and panels, can entangle and crush your limbs. These components move automatically.

- Do not remove guards, covers, or panels.
- Do not reach into the machine housing or frame.
- Keep yourself and others off of machine.
- Know the location of all emergency stop switches, pull cords, and/or kick plates and use them in an emergency to stop machine motion.

WARNING 3: Crush Hazards—Tilting machines only—The machine housing will crush your body or limbs if it descends or falls while you are under it. Housing can descend with power off or on. Manual operation of tilting valves overrides safety interlocks. Improper operation of manual tilting valves may cause the housing to descend.

- Do not remove guards, covers, or panels.
- Do not reach into the machine housing or frame.

3. Safety Alert Messages—External Mechanical Hazards [Document BIUUUS12]

The following are instructions about hazards around the front, sides, rear or top of the machine.

WARNING 4: Crush Hazards—Suspended machines only—Spaces between the shell and housing can close and crush or pinch your limbs. The shell moves within the housing during operation.

- Do not reach into the machine housing or frame.
- Keep yourself and others clear of movement areas and paths.

WARNING 5: Fall, Entangle, and Strike Hazards—Machine motion can cause you to fall or become entangled in or struck by nearby objects if you stand, walk, or ride on the machine. Shuttles and conveyor belts move automatically.

- Keep yourself and others off of machine.

4. Safety Alert Messages—Cylinder and Processing Hazards [Document BIUUUS13]

The following are instructions about hazards related to the cylinder and laundering process.

DANGER 6: Entangle and Sever Hazards—Contact with goods being processed can cause the goods to wrap around your body or limbs and dismember you.

- Do not attempt to open the door or reach into the cylinder until the cylinder is stopped.
- Do not touch goods inside or hanging partially outside the turning cylinder.
- Know the location of all emergency stop switches, pull cords, and/or kick plates and use them in an emergency to stop machine motion.
- Know the location of the main machine disconnect and use it in an emergency to remove all electric power from the machine.

WARNING 7: Crush Hazards—Contact with the turning cylinder can crush your limbs. The cylinder will repel any object you try to stop it with, possibly causing the object to strike or stab you.

- Lock out and tag out power at the main machine disconnect before reaching into the cylinder.
- Do not place any object in the turning cylinder.

WARNING 8: Confined Space Hazards—Confinement in the cylinder can kill or injure you. Hazards include but are not limited to panic, burns, poisoning, suffocation, heat prostration, biological contamination, electrocution, and crushing.

- Do not attempt unauthorized servicing, repairs, or modification.

WARNING 9: Explosion and Fire Hazards—Flammable substances can explode or ignite in the cylinder, drain trough, or sewer. The machine is designed for washing with water, not any other solvent. Processing can cause solvent-containing goods to give off flammable vapors.

- Do not use flammable solvents in processing.

5. Safety Alert Messages—Unsafe Conditions [Document BIUUUS14]

5.1. Damage and Malfunction Hazards

5.1.1. Hazards Resulting from Inoperative Safety Devices

WARNING 10: Multiple Hazards—Operating the machine with an inoperative safety device can kill or injure personnel, damage or destroy the machine, damage property, and/or void the warranty.

- Do not tamper with or disable any safety device or operate the machine with a malfunctioning safety device. Request authorized service.

WARNING 11: Electrocution and Electrical Burn Hazards—Electric box doors—Operating the machine with any electric box door unlocked can expose high voltage conductors inside the box.

- Do not unlock or open electric box doors.

WARNING 12: Entangle and Crush Hazards—Guards, covers, and panels—Operating the machine with any guard, cover, or panel removed exposes moving components.

- Do not remove guards, covers, or panels.

5.1.2. Hazards Resulting from Damaged Mechanical Devices

WARNING 13: Multiple Hazards—Operating a damaged machine can kill or injure personnel, further damage or destroy the machine, damage property, and/or void the warranty.

- Do not operate a damaged or malfunctioning machine. Request authorized service.

WARNING 14: Explosion Hazards—Cylinder—A damaged cylinder can rip apart during extraction, puncturing the shell and discharging metal fragments at high speed.

- Do not operate the machine with any evidence of damage or malfunction.

5.2. Careless Use Hazards

5.2.1. Careless Operation Hazards—Vital Information for Operator Personnel (see also operator hazards throughout manual)

WARNING 15: Multiple Hazards—Careless operator actions can kill or injure personnel, damage or destroy the machine, damage property, and/or void the warranty.

- Do not tamper with or disable any safety device or operate the machine with a malfunctioning safety device. Request authorized service.
- Do not operate a damaged or malfunctioning machine. Request authorized service.
- Do not attempt unauthorized servicing, repairs, or modification.
- Do not use the machine in any manner contrary to the factory instructions.
- Use the machine only for its customary and intended purpose.
- Understand the consequences of operating manually.

CAUTION 16: Goods Damage and Wasted Resources—Entering incorrect cake data causes improper processing, routing, and accounting of batches.

- Understand the consequences of entering cake data.

5.2.2. Careless Servicing Hazards—Vital Information for Service Personnel (see also service hazards throughout manuals)

WARNING 17: Electrocution and Electrical Burn Hazards—Contact with electric power can kill or seriously injure you. Electric power is present inside the cabinetry unless the main machine power disconnect is off.

- Do not service the machine unless qualified and authorized. You must clearly understand the hazards and how to avoid them.
- Abide by the current OSHA lockout/tagout standard when lockout/tagout is called for in the service instructions. Outside the USA, abide by the OSHA standard in the absence of any other overriding standard.

WARNING 18: Entangle and Crush Hazards—Contact with moving components normally isolated by guards, covers, and panels, can entangle and crush your limbs. These components move automatically.

- Do not service the machine unless qualified and authorized. You must clearly understand the hazards and how to avoid them.
- Abide by the current OSHA lockout/tagout standard when lockout/tagout is called for in the service instructions. Outside the USA, abide by the OSHA standard in the absence of any other overriding standard.

WARNING 19: Crush Hazards—Tilting machines only—The machine housing will crush your body or limbs if it descends or falls while you are under it. Housing can descend with power off or on. Manual operation of tilting valves overrides safety interlocks. Improper operation of manual tilting valves may cause the housing to descend.

- Secure both red safety supports in accordance with the instructions furnished, then lock out and tag out power at the main machine disconnect before working under the tilted machine.
- Do not operate the manual tilt valves with anyone under the machine.
- Do not operate the tilt controls with anyone under the machine.

WARNING 20: Confined Space Hazards—Confinement in the cylinder can kill or injure you. Hazards include but are not limited to panic, burns, poisoning, suffocation, heat prostration, biological contamination, electrocution, and crushing.

- Do not enter the cylinder until it has been thoroughly purged, flushed, drained, cooled, and immobilized.

— End of BIUUUS27 —

About the Forces Transmitted by Milnor® Washer-extractors

During washing and extracting, all washer-extractors transmit both static and dynamic (cyclic) forces to the floor, foundation, or any other supporting structure. During washing, the impact of the goods as they drop imparts forces which are quite difficult to quantify. Size for size, both rigid and flexibly-mounted machines transmit approximately the same forces during washing. During extracting, rigid machines transmit forces up to 30 times greater than equivalent flexibly-mounted models. The actual magnitude of these forces vary according to several factors:

- machine size,
- final extraction speed,
- amount, condition, and type of goods being processed,
- the liquor level and chemical conditions in the bath preceding extraction, and
- other miscellaneous factors.

Estimates of the maximum force normally encountered are available for each Milnor® model and size upon request. Floor or foundation sizes shown on any Milnor® document are only for on-grade situations based only on previous experience without implying any warranty, obligation, or responsibility on our part.

1. Rigid Machines

Size for size, rigid washer-extractors naturally require a stronger, more rigid floor, foundation, or other supporting structure than flexibly-mounted models. If the supporting soil under the slab is itself strong and rigid enough and has not subsided to leave the floor slab suspended without support, on grade installations can often be made directly to an existing floor slab if it has enough strength and rigidity to safely withstand our published forces without transmitting undue vibration. If the subsoil has subsided, or if the floor slab itself has insufficient strength and rigidity, a deeper foundation, poured as to become monolithic with the floor slab, may be required. Support pilings may even be required if the subsoil itself is “springy” (i.e., if its resonant frequency is near the operating speed of the machine). Above-grade installations of rigid machines also require a sufficiently strong and rigid floor or other supporting structure as described below.

2. Flexibly-mounted Machines

Size for size, flexibly-mounted machines generally do not require as strong a floor, foundation, or other supporting structure as do rigid machines. However, a floor or other supporting structure having sufficient strength and rigidity, as described in Section 3, is nonetheless vitally important for these models as well.

3. How Strong and Rigid?

Many building codes in the U.S.A. specify that laundry floors must have a minimum live load capacity of 150 pounds per square foot (732 kilograms per square meter). However, even compliance with this or any other standard does not necessarily guarantee sufficient rigidity. In any event, it is the sole responsibility of the owner/user to assure that the floor and/or any other supporting structure exceeds not only all applicable building codes, but also that the floor and/or any other supporting structure for each washer-extractor or group of washer-extractors actually has sufficient strength and rigidity, plus a reasonable factor of safety for both, to support the weight of all the fully loaded machine(s) including the weight of the water and goods, and including the published 360º rotating sinusoidal RMS forces that are transmitted by the machine(s). Moreover, the floor, foundation, or other supporting structure must have sufficient

rigidity (i.e., a natural or resonant frequency many times greater than the machine speed with a reasonable factor of safety); otherwise, the mentioned 360º rotating sinusoidal RMS forces can be multiplied and magnified many times. It is especially important to consider all potential vibration problems that might occur due to all possible combinations of forcing frequencies (rotating speeds) of the machine(s) compared to the natural frequencies of the floor and/or any other supporting structure(s). A qualified soil and/or structural engineer must be engaged for this purpose.

Figure 1: How Rotating Forces Act on the Foundation

Typical Machine

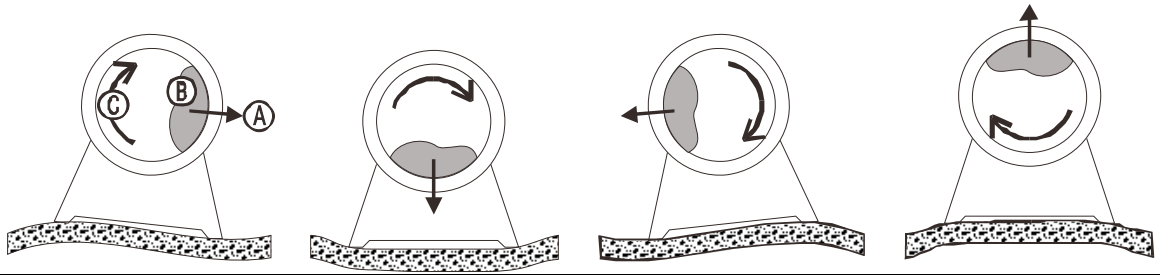

Legend

A. Direction of force
B. Load
C. Rotation (Frequency = RPM / 60)

Figure 1 above is intended to depict both on-grade and above-grade installations and is equally applicable to flexibly-mounted washer-extractors, as well as to rigid models installed either directly on a floor slab or on a foundation poured integrally with the slab. Current machine data is available from Milnor® upon request. All data is subject to change without notice and may have changed since last printed. It is the sole responsibility of every potential owner to obtain written confirmation that any data furnished by Milnor® applies for the model(s) and serial number(s) of the specific machines.

— End of BIWUUI02 —

BIUUUI02PE (Published) Book specs- Dates: 20160420 / 20160420 / 20160420 Lang: ENG01 Applic: PEU

Tag Guidelines for the Models Listed Below

M7V4232C	M7V4232L	M7V4232R	M7V4836C	M7V4836L	M7V4836R	M7V4840C
M9S4232C	M9S4232L	M9S4232R	M9V4232C	M9V4232L	M9V4232R	M9V4840C
M9V4840L	M9V4840R	MMS4232C	MMS4232L	MMS4232R	MMV4232C	MMV4232L
MMV4232R	MXS4232C	MXS4232L	MXS4232R	MXV4232C	MXV4232L	MXV4232R

Notice 1: This information may apply to models in addition to those listed above. It applies to paper tags. It does not apply to the vinyl or metal safety placards, which must remain permanently affixed to the machine and replaced if no longer readable.

Paper tags on the machine provide installation guidelines and precautions. The tags can be tie-on or adhesive. You can remove tie-on tags and white, adhesive tags after installation. Yellow adhesive tags must remain on the machine.

The following entries explain the installation tags. Each entry includes: 1) the tag illustration, 2) the tag part number displayed st the bottom of the tag, and 3) the meaning of the tag.

Display or Action	Explanation
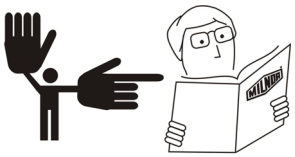	Read the manuals before proceeding. This symbol appears on most tags. The machine ships with safety, operator, and routine maintenance guides for customer use. Milnor dealer manuals for installing, servicing, and commissioning this machine are also available from the Milnor Parts department.
	B2TAG88005: This carefully built product was tested and inspected to meet Milnor® performance and quality standards by (identification mark of tester).
	B2TAG94078: Do not forklift here; do not jack here; do not step here—whichever applies.
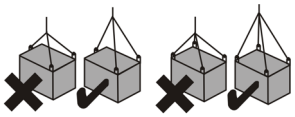	B2TAG94079: Rig for crane lifting (either 3-point or 4-point, depending on the number of lifting eyes provided) using a steep angle on the chains (closer to vertical than horizontal).
	B2TAG94081: Motor must rotate in this direction. On single motor washer-extractors and centrifugal extractors, the drive motor must turn in this direction during draining and extraction. This tag is usually wrapped around a motor housing. If the motor turns in the opposite direction when the machine is first tested, the electrical hookup is incorrect and must be reversed as explained in the schematic manual.
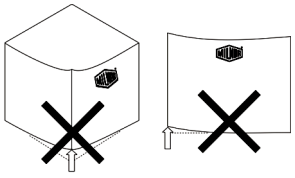	B2TAG94084: Do not lift from one corner of the machine, as this can cause the frame to rack, damaging it.
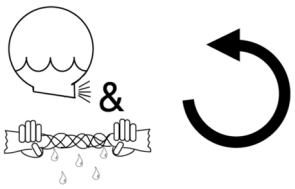	B2TAG94097: The cylinder must rotate **counterclockwise** during draining and extraction (spin) when viewed from here (rear of machine). Otherwise, reverse the electric power connections, as explained in the schematic manual.

Display or Action	Explanation
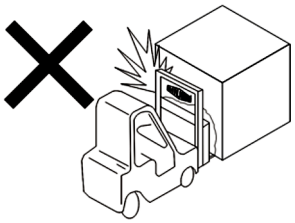	B2TAG94118: Do not strike shipping container during fork-lifting. Fragile components inside.
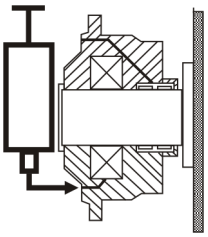	B2TAG96007: Add grease here. Refer to the preventive maintenance schedule in the service manual.
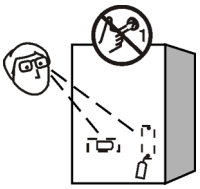	B2T2001028: Look for tags inside the machine. These tags may identify shipping restraints to be removed or components to be installed. Do not start the machine until these actions are completed.
 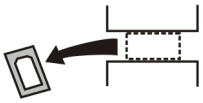	B2T2002013: Do not start the machine until shipping restraints are removed. This tag will appear on the outside of the machine to alert you to the presence of internal shipping restraints. A tag will also appear on the restraint to help identify it. Most, but not all shipping restraints display the color red. Some shipping restraints are also safety stands. Do not discard these.

— End of BIUUUI02 —

Installation 1

HANDLING AND SETTING CENTRIFUGAL EXTRACTORS

Handling Precautions

1. Remove the protective coverings (leaving the machine on shipping skids) and examine carefully for possible shipping damage. **If the machine is damaged, notify the transportation company immediately.**

   NOTE: Once the machine is given to the carrier, it is solely the responsibility of the carrier to ensure that no damage occurs during transit. In addition to readily apparent damage, carriers are liable for concealed damage. **Do not hesitate to file a claim with the carrier if the machine is damaged in any way during shipment.** Milnor® will be glad to assist you in filing your claim, but is not responsible for any shipping damage to the machine once it has been delivered to the carrier in good condition.

2. Consult Milnor® for instructions if crane lifting is required.

3. Use skids for fork lifting. If possible, leave the machine on shipping skids until it is near its final position. Once the skids are removed, take care in placing forks under the machine. **Do not allow the forks to come in contact with valves, piping, motors, etc., located under the machine.**

4. Never push, pull, lift, jack, or exert pressure on any components that protrude from the machine frame (shell front, door, electric boxes, controls, guards, conduits, conveyors, piping, etc.).

Site Requirements

Space Requirements

1. All openings and corridors through which equipment must pass during installation must be large enough to accomodate the width and the height of the machine as shown on the dimensional drawings. It is occasionally possible to reduce the overall dimensions by removing piping or other special modifications. Consult Milnor® for additional information.

2. Sufficient clearance must be provided for normal operation and maintenance procedures.

Operation Requirements

1. Allow sufficient ventilation for the heat and vapors of normal operation to dissipate.

2. Provide easy access to controls. Operators must be able to view all status lights and reach all controls associated with the machine.

Foundation Requirements—The floor and/or all other support components must have sufficient strength and rigidity with due consideration for the natural or resonant frequency thereof to withstand the fully loaded weight of the machine, including the wet goods and any repeated sinusoidal (rotating) forces generated during its operation. Determining the suitability of floors, foundations, and other supporting structures normally requires *analysis by a qualified structural engineer.*

Setting Procedures

To protect against lateral creeping of the machine during operation (due to vibration), roughen the area of the floor where the grout will be applied. Anchor bolts are required.

1. With the machine near the final location, unbolt the shipping skids. Observing all precautions, lift the machine off its skids, and lower the machine onto blockings. Shim the blockings until the machine is level and approximately 1" (25) clearance exists under each base pad. Install anchor bolts (as shown on the dimensional drawing), but **do not tighten bolts until grout is completely dry.**

2. Apply grout between the existing foundation floor and the base pads, observing the following considerations:

- Use only industrial strength non-shrinking grout.
- If the grout (after mixing) is too thin (causing it to flow from under the base pads), install temporary cardboard framing around pads to retain the grout until it cures.
- If the grout (after mixing) is of proper consistency, pack or trowel by hand.

⚠ CAUTION ⚠

VIBRATION AND MALFUNCTION HAZARD—Voids under base pads can magnify vibration and cause unsatisfactory operation.

☞ **Grout must displace total clearance between base pads and existing foundation floor.**

☞ **Voids must not exist.**

3. Tighten anchor bolts evenly using only one-quarter turn on each bolt before moving to the next one. While tightening, frequently skip from front to back and right to left to insure uniform tension. After tightening all bolts, check each bolt at least twice during the first week of operation.

4. **Please check perforated cylinder for smoothness before placing machine in service. We cannot accept claims for damage to cylinder's smooth finish after machine has been placed in service.**

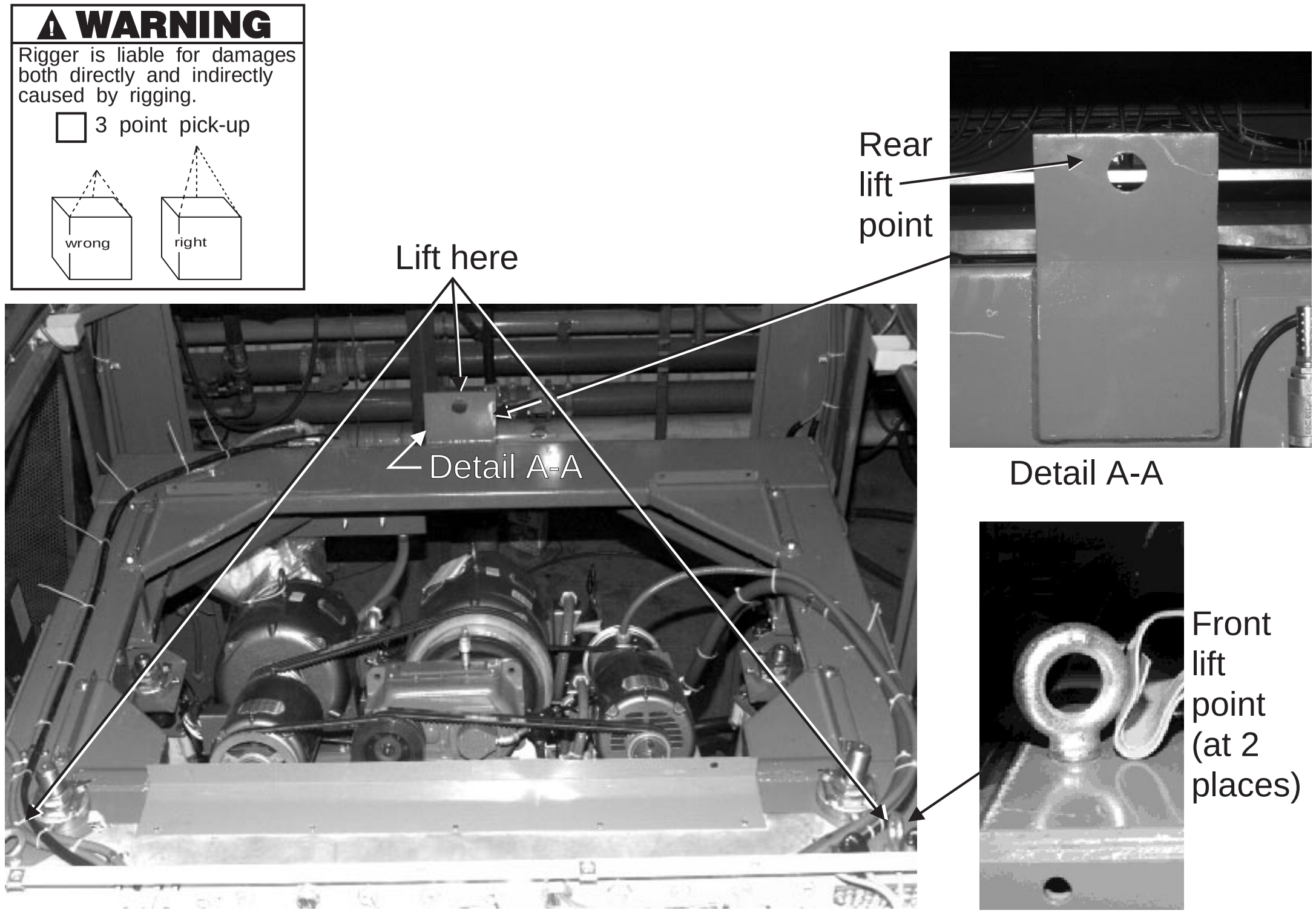

FIGURE 1 (MSINA406AE)
Lifting and Jacking Points

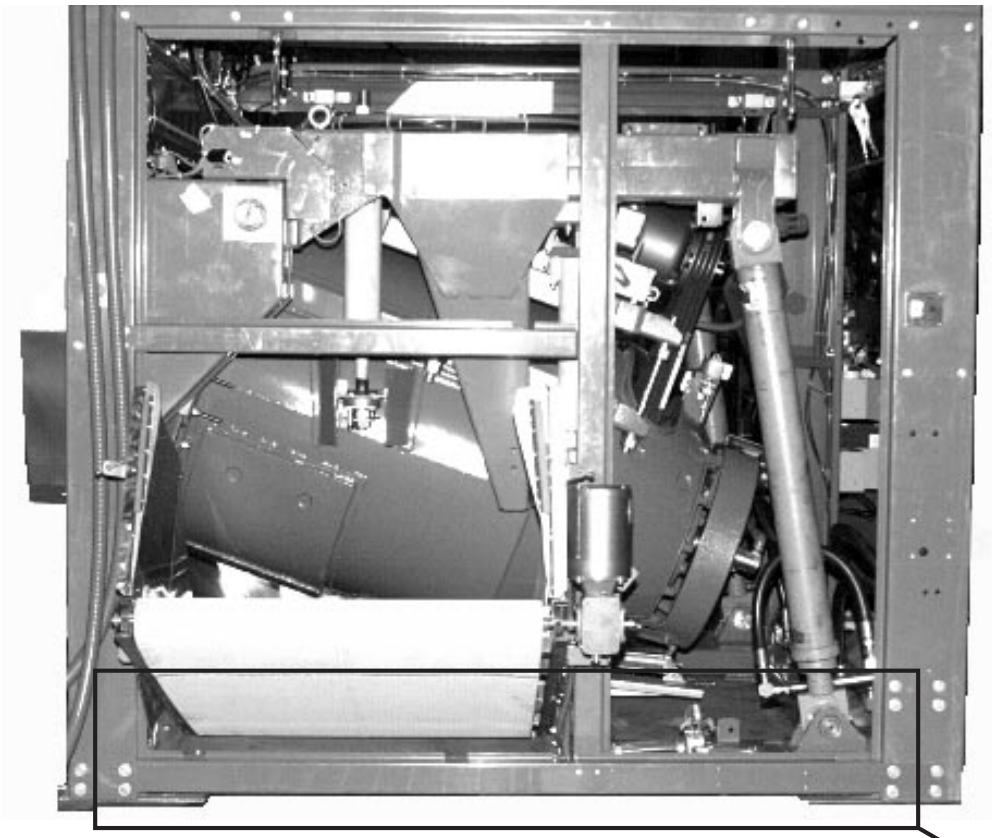

⚠ CAUTION ⚠

Lift and jack at base only (shown below). Forklift blades must not contact conveyor, hydraulic lines, or cosmetics. See "Jacking Precautions" below.

base

Jacking Precautions

NOTE 1: Only lift or jack high enough to place or remove crawlers or other moving aids.

NOTE 2: When jacking machine, spread forks far enough apart to distribute weight properly. Do not rack machine!

FIGURE 2 (MSINA406AE)
Lifting and Jacking Points

⚠ WARNING ⚠

Remove shipping restraints before attempting to run machine, but only after machine is in place. Restraints are usually marked with red, and may be concealed behind access panels. Replace those fasteners which are part of the machine structure.

Front shipping mounting bracket location (painted red)

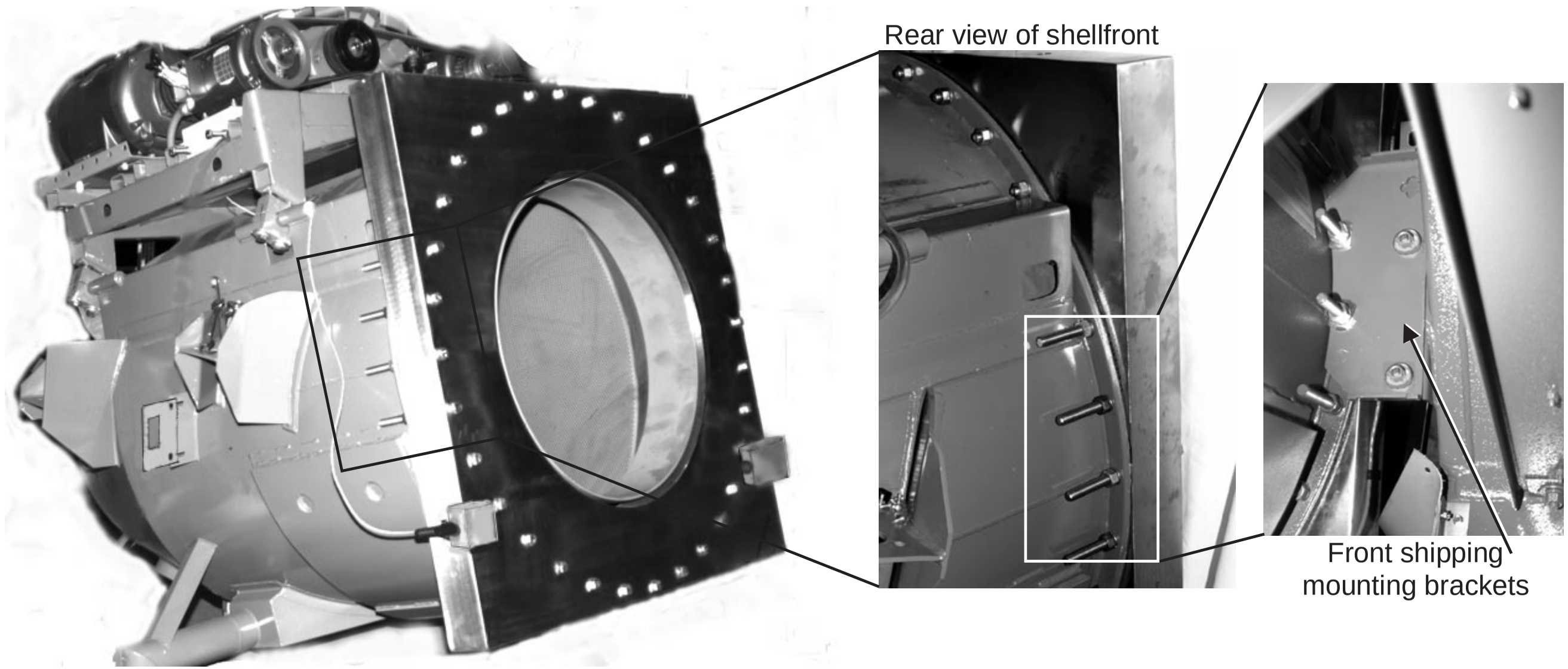

FIGURE 3 (MSINA406AE)
Shipping Brackets and Restraints (painted red)

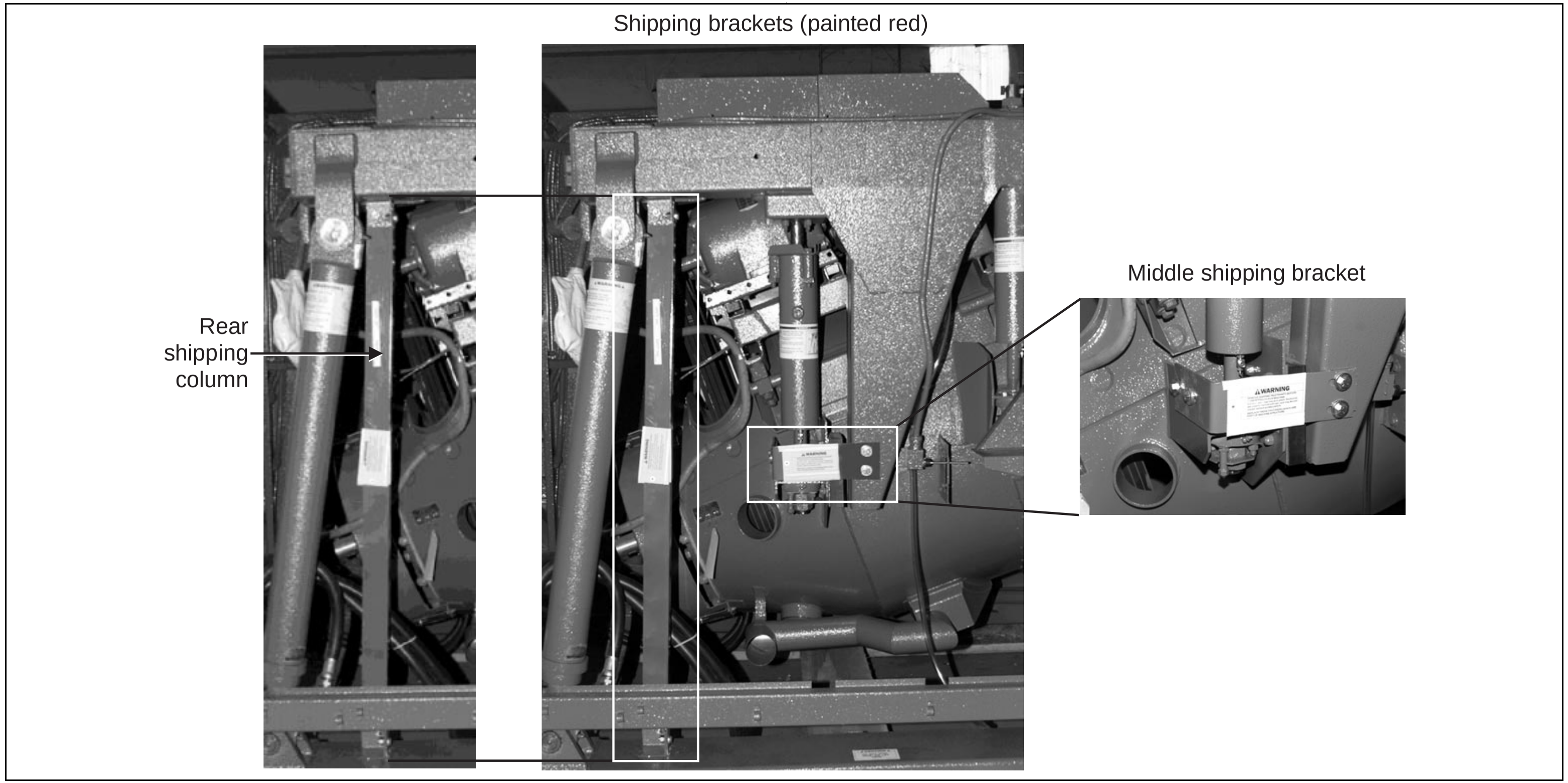

FIGURE 4 (MSINA406AE)
Shipping Restraints and Brackets (painted red)

CENTRIFUGAL EXTRACTOR SERVICE CONNECTIONS

General

These service connections are required (depending on the machine model and optional features):

1. Piped inlets and outlets (compressed air, reuse water, or drain and load chute drain, if equipped). The sizes and locations of piped inlets and outlets are shown on the dimensional drawings for the machine.
2. Electric power connections, (for additional information see “EXTERNAL FUSE AND WIRE SIZES FOR MILNOR® MACHINES” - MAEFUSE1AE).

Requirements for Piped Connections

Inlet pressures must be within the minimum/maximum range specified. Pressure outside of the specified range may cause the machine to operate inefficiently or malfunction, and may damage machine components.

⚠ CAUTION ⚠

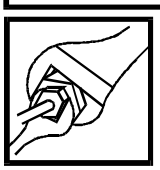

MACHINE DAMAGE—Valve bodies will be ruined if twisted and distorted.

☞ **Hold the connection side of the valve with a wrench when connecting plumbing.**

Piped Inlet/Outlet Specifications—The piped inlet and outlet requirements are as follows (see dimensional drawings for the size and location of connection points):

Piped Inlets

Description of Connection	Source Requirements	Piping Specifications
Compressed air inlet	1" NPT 85-115 PSI (5.97-8.08 kilogram/centimeter^2)	Pipe material per plumbing code

Piped Outlets

Description of Connection	Destination Requirements	Piping Specifications
Reuse tank discharge pipe	1 1/2" NPT	Rubber hose, PVC, or other approved material per plumbing code
Drain (non-reuse equipped machines)	3" NPT unrestricted gravity feed to sewer	Same as above
Load chute drain (piped to sewer or reuse tank)	1" (25.4)	Flexible tubing or other approved material per plumbing code

When Making Electrical Power Connections

⚠ DANGER ⚠

ELECTROCUTION HAZARD—Contact with high voltages can kill or seriously injure you.

☞ **All electrical connections must be made by a competent electrician.**

1. Connections must be made by a competent electrician.
2. See fuse and wire sizing information in the schematic manual and on the machine nameplate.
3. "Stinger leg" if any, must be connected to terminal L3 only.
4. Make power connections within beltbox.
5. Only use BUSSMAN FUSETRON FRN (up to 250V), FRS (up to 600V) or similar lag fuses. The nameplate for fuse sizes must not be applied to standard fuses.
6. See nameplate for fuse and wire sizes. If wire runs more than 50 feet (15.24), increase by one wire size per each additional 50 feet (15.24).

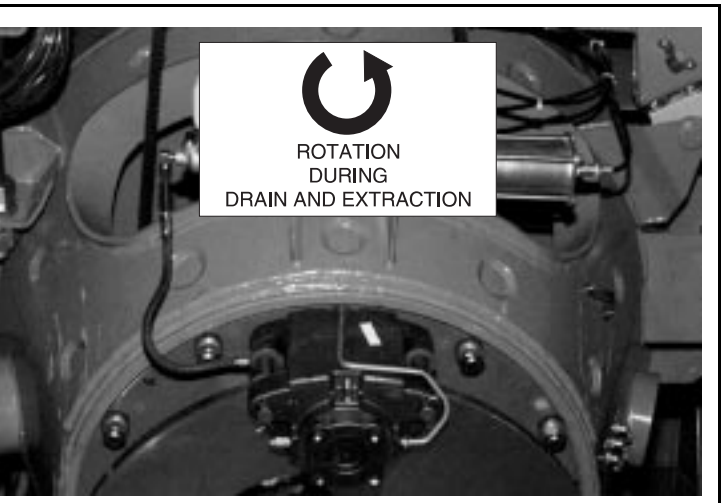

FIGURE 1 (MSIN0906AE)
Cylinder Rotation (Viewed from rear)

7. Verify all motor rotation (see the M7E extractor reference manual for more information). If the cylinder turns in the wrong direction, interchange the wires connected to L1 and L2. **Never move L3, under any circumstances.**

NOTE: Before shipping, all motors are properly phased for correct rotation. It is possible to reverse the direction of rotation in a three-phase machine by interchanging the incoming power leads. Therefore, the rotation of a three-phase machine must be observed and corrected when the machine is first installed. If it is necessary to reverse the rotation, simply swap the incoming power lines to the machine (never move L3 if L3 is a stinger leg). Never attempt to reconnect motors or the motor control devices.

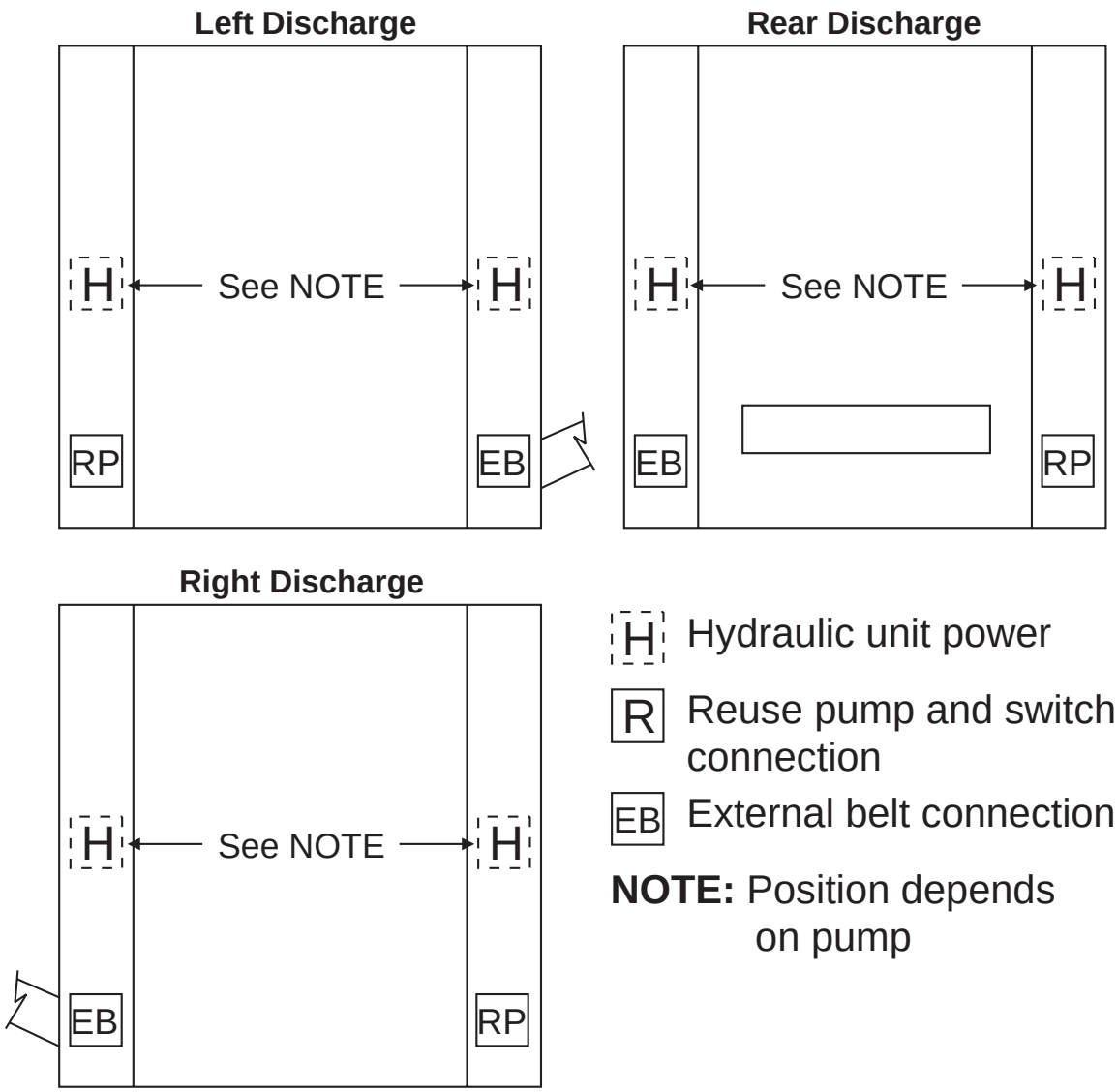

Hydraulic unit power

Reuse pump and switch connections

External belt connections

FIGURE 2 (MSIN0906AE)
Electrical Connections

Electric Power and Air Connections

⚠ CAUTION ⚠

Voltage fluctuations of more than 10% above or below the specified voltage for the machine are extremely detrimental to electrical components, especially motors.

☞ **Correct any such condition prior to commissioning the machine.**

The customer must furnish a remotely mounted disconnect switch with lag type fuses, circuit breakers, and wiring between the electrical service box and the junction box on the machine. The sizes of these fuses and wires, along with the motor fuses supplied with the machine, depend on the machine voltage. See fuse and wire sizing information in the schematic manual and on the machine nameplate.

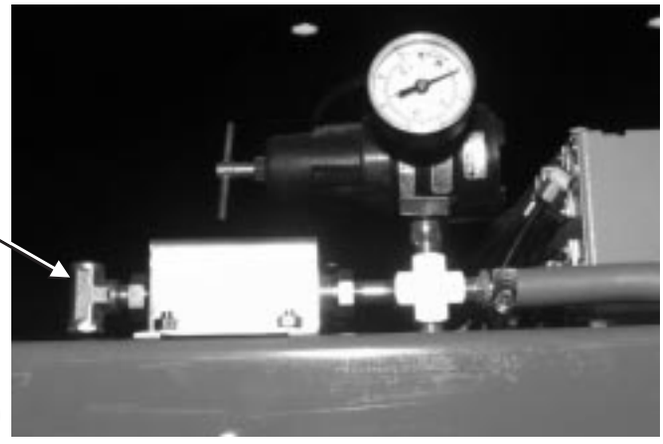

FIGURE 3 (MSIN0906AE)
Air Connection

AIR CONNECTION

MINIMUM 85 PSI (Generally)
MAXIMUM 110 PSI (Check nameplate on machine)

THE BRAKE INTERLOCK PRESSURE SWITCH WILL NOT PERMIT THE MACHINE TO EXTRACT IF THE AIR PRESSURE IS TOO LOW. THE MACHINE WILL ROTATE AT DRAIN SPEED INSTEAD.

If this happens, check your air compressor. If your gauge shows more than 85 PSI the gauge is probably faulty. Some air compressors are set with too great a pressure differential between the lowest pressure obt ainable and the highest pressure obtainable. Hence, if your compressor is set to go on at 60 PSI and off at 110 PSI, the machine will extract quite satisfactorily whenever the air pressure is above 85 PSI, but will not enter extraction at all when the pressure is below 85 PSI.

⚠ CAUTION

USE ONLY YOUR FINGERS TO DEPRESS THE KEYS.

NEVER USE SHARP OBJECTS.

WHEN USED PROPERLY THIS KEYPAD WILL WITHSTAND HEAVY INDUSTRIAL USE.

DAMAGE MAY OCCUR IF KEYS ARE DEPRESSED BY A SCREWDRIVER, PEN, ETC.

FIGURE 4 (MSIN0906AE)
Air and Electrical Connection Precautions

Pull-wire Stop Switch

All Conveyors

Figure 1: Pull-wire Stop Switch Installation

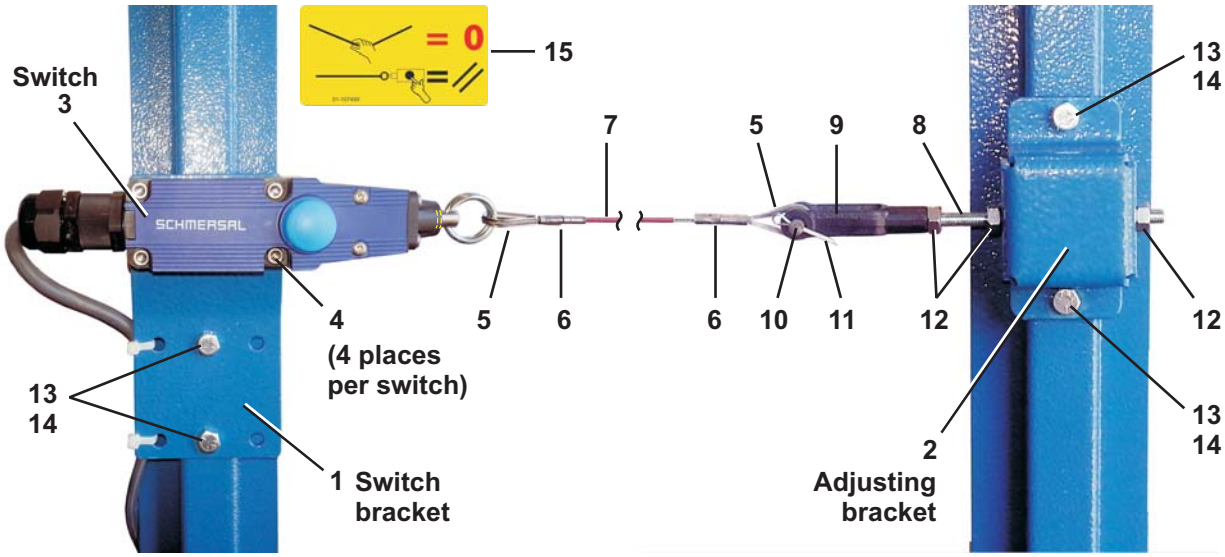

Installation and operation:

1. Install the switch bracket, switch, and adjusting bracket to the conveyor side supports as shown. (Install pull-wire stop switch to both sides of all conveyors.)
For long spans, intermediate wire supports are required every 2 m to 5 m (6 ft to 16 ft). Sufficient space must be provided so that maximum perpendicular force on the wire to activate the switch is 200 N (45 pounds) and the maximum deflection of the wire is 400 mm (15”).
2. Assemble and install the cable (pull cord), thimbles, and sleeves so that the cable is tight but does not begin to move the switch shaft.
3. Adjust the position of the threaded rod (item 8) so that the cable pulls the switch shaft out until the first of two notches on the shaft is visible but the second notch is not.
4. Tighten the nuts on the threaded rod (item12) to hold it at this position.

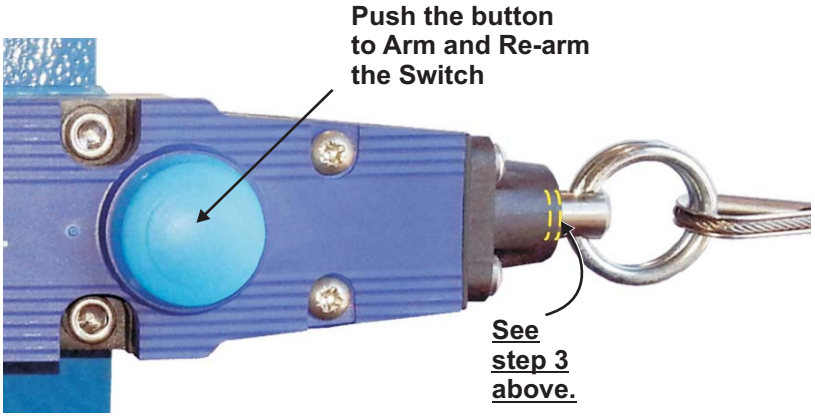

5. Press the button on the switch to ARM. The button should remain depressed. If it does not, the switch shaft is not in the correct position.
6. Press the button to RE-ARM the switch after the wire has been tripped.

Pull-wire Stop Switch

All Conveyors

Parts List—Pull-wire Stop Switch

Find the correct assembly first, then find the needed components. The item letters (A, B, C, etc.) assigned to assemblies are referred to in the "Used In" column to identify which components belong to an assembly. The item numbers (1, 2, 3, etc.) assigned to components relate the parts list to the illustration.

Used In	Item	Part Number	Description	Comments
			----------ASSEMBLIES----------	
	A	ALC40005E	PULL-WIRE STOP SWITCH ASSY	
			----------COMPONENTS----------	
all	1	04 20066	WIREPULL SWITCH BRACKET	
all	2	04 20067	WIREPULL ADJUSTING BRKT	
all	3	09RS0002	PULL-WIRE SW SCHMERSAL#ZQ 700-11	
all	4	15K022B	SOKCPSCR 10-24UNC X 1+1/2"LG SS18	
all	5	27A951	1/16" SS WIRE ROPE THIMBLE	
all	6	27A952	1/16" OVAL SLEEVE S/S	
all	7	27A953	CABLE-AIRCRAFT 1/16SS7X7REDCV	
all	8	17R015	THRD ROD 1/4-28UNFX4.5" ZNC PL	
all	9	17A004	ADJ YOKE END 1/4-28 XYLAN COAT	
all	10	17A004A	CLEVIS PIN 1/4"X3/4"DRILLED SS	
all	11	15H031	STDCOTTERPIN 3/32X3/4 SS18-8	
all	12	15G177	HXNUT 1/4-28UNF2B SAE ZINC GR2	
all	13	15K038B	1/4-20X 1/2 HEXFLANGE SCREW	
all	14	15G178	1/4"-20 HEXFLANGE NUT ZINC	
all	15	01 10749X	NPLT:PULL TO STOP+RESET>ISO	

BIUUUM04 (Published) Book specs- Dates: 20080506 / 20080506 / 20080506 Lang: ENG01 Applic: UUU

Fastener Torque Requirements

Torque requirements for other fasteners are specified in the specific document which describes the assembly. **If fastener torque specifications or threadlocking compound requirements in an assembly document vary from the specifications in this document, use the assembly document.**

Figure 1: Common Bolts Used in Milnor Equipment

Bolt Head Identifying Marks

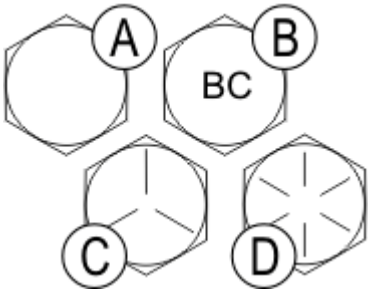

Legend

A. SAE Grades 1 and 2, ASTM A307, and stainless steel
B. ASTM A354 Grade BC
C. SAE Grade 5, ASTM A449
D. SAE Grade 8 and ASTM A354 BD

1. Torque Values

The tables below list the standard size, grade, threadlocking compound, and torque requirements for fasteners commonly used on Milnor® equipment.

Note 1: Data derived from Pellerin Milnor® Corporation "Bolt Torque Specification" (bolt_torque_milnor.xls/2002096).

1.1. Carbon Steel Fasteners

1.1.1. Without Threadlocking Compound

Table 1: Torque Values for Dry Fasteners 5/16-inch and Smaller

	Bolt Grade							
	Grade 2		Grade 5		Grade 8		Grade BC	
Bolt Size	Pound-Inches	N-m	Pound-Inches	N-m	Pound-Inches	N-m	Pound-Inches	N-m
1/4 x 20	66	7	101	11	143	16	126	14
1/4 x 28	76	9	116	13	163	18	--	--
5/16 x 18	136	15	209	24	295	33	258	29
5/16 x 24	150	17	232	26	325	37	--	--

Table 2: Torque Values for Dry Fasteners Larger Than 5/16-inch

	Bolt Grade							
	Grade 2		Grade 5		Grade 8		Grade BC	
Bolt Size	Pound-feet	N-m	Pound-feet	N-m	Pound-feet	N-m	Pound-feet	N-m
3/8 x 16	20	27	31	42	44	59	38	52
3/8 x 24	23	31	35	47	50	68	--	--
7/16 x 14	32	43	49	66	70	95	61	83
7/16 x 20	36	49	55	75	78	105	--	--
1/2 x 13	49	66	75	102	107	145	93	126
1/2 x 20	55	75	85	115	120	163	--	--
9/16 x 12	70	95	109	148	154	209	134	182
9/16 x 18	78	106	121	164	171	232	--	--
5/8 x 11	97	131	150	203	212	287	186	252
5/8 x 18	110	149	170	231	240	325	--	--
3/4 x 10	172	233	266	361	376	510	329	446
3/14 x 16	192	261	297	403	420	569	--	--
7/8 x 9	167	226	429	582	606	821	531	719
7/8 x 14	184	249	473	641	668	906	--	--
1 x 8	250	339	644	873	909	1232	796	1079
1 x 12	274	371	704	954	994	1348	--	--
1 x 14	281	381	723	980	1020	1383	--	--
1 1/8 x 7	354	480	794	1077	1287	1745	1126	1527
1 1/8 x 12	397	538	891	1208	1444	1958	--	--
1 1/4 x 7	500	678	1120	1519	1817	2464	1590	2155
1 1/4 x 12	553	750	1241	1682	2012	2728	--	--
1 3/8 x 6	655	888	1469	1992	2382	3230	2085	2827
1 3/8 x 12	746	1011	1672	2267	2712	3677	--	--
1 1/2 x 6	869	1178	1949	2642	3161	4286	2767	3751
1 1/2 x 12	979	1327	2194	2974	3557	4822	--	--

Table 3: Torque Values for Plated Fasteners 5/16-inch and Smaller

	Bolt Grade							
	Grade 2		Grade 5		Grade 8		Grade BC	
Bolt Size	Pound-Inches	N-m	Pound-Inches	N-m	Pound-Inches	N-m	Pound-Inches	N-m
1/4 x 20	49	6	76	9	107	12	95	11
1/4 x 28	56	6	88	10	122	14	--	--
5/16 x 18	102	12	156	18	222	25	193	22
5/16 x 24	113	13	174	20	245	28	--	--

Table 4: Torque Values for Plated Fasteners Larger Than 5/16-inch

	Bolt Grade							
	Grade 2		Grade 5		Grade 8		Grade BC	
Bolt Size	Pound-feet	N-m	Pound-feet	N-m	Pound-feet	N-m	Pound-feet	N-m
3/8 x 16	15	20	23	31	33	44	29	38
3/8 x 24	17	23	26	35	37	49	--	--
7/16 x 14	24	32	37	50	52	71	46	61
7/16 x 20	27	36	41	55	58	78	--	--
1/2 x 13	37	49	56	76	80	106	70	93
1/2 x 20	41	55	64	85	90	120	--	--
9/16 x 12	53	70	81	110	115	153	101	134
9/16 x 18	59	79	91	122	128	174	--	--
5/8 x 11	73	97	113	150	159	212	139	186
5/8 x 18	83	110	127	172	180	240	--	--
3/4 x 10	129	173	200	266	282	376	246	329
3/14 x 16	144	192	223	297	315	420	--	--
7/8 x 9	125	166	322	430	455	606	398	531
7/8 x 14	138	184	355	474	501	668	--	--
1 x 8	188	250	483	644	682	909	597	796
1 x 12	205	274	528	716	746	995	--	--
1 x 14	210	280	542	735	765	1037	--	--
1 1/8 x 7	266	354	595	807	966	1288	845	1126
1 1/8 x 12	298	404	668	890	1083	1444	--	--
1 1/4 x 7	375	500	840	1120	1363	1817	1192	1590
1 1/4 x 12	415	553	930	1261	1509	2013	--	--
1 3/8 x 6	491	655	1102	1470	1787	2382	1564	2085
1 3/8 x 12	559	758	1254	1672	2034	2712	--	--
1 1/2 x 6	652	870	1462	1982	2371	3161	2075	2767
1 1/2 x 12	733	994	1645	2194	2668	3557	--	--

1.1.2. With Threadlocking Compound

Table 5: Threadlocking Compound Selection by Bolt Size

	Bolt Size			
LocTite Product	**1/4"**	**1/4" – 5/8"**	**5/8" – 7/8"**	**1" +**
LocTite 222	OK			
LocTite 242		OK		
LocTite 262			OK	
LocTite 272			High temperature	
LocTite 277				OK

Table 6: Torque Values for Applications of LocTite 222

Bolt Size	Bolt Grade							
	Grade 2		Grade 5		Grade 8		Grade BC	
	Pound-inches	N-m	Pound-inches	N-m	Pound-inches	N-m	Pound-inches	N-m
1/4 x 20	60	7	96	11	132	15	108	12
1/4 x 28	72	8	108	12	144	16	--	--

Table 7: Torque Values for Applications of LocTite 242

Bolt Size	Bolt Grade							
	Grade 2		Grade 5		Grade 8		Grade BC	
	Pound-feet	N-m	Pound-feet	N-m	Pound-feet	N-m	Pound-feet	N-m
5/16 x 18	11	15	17	23	25	34	22	30
5/16 x 24	13	18	19	26	27	37	27	37
3/8 x 16	20	27	31	42	44	60	38	52
3/8 x 24	23	31	35	47	50	68	--	--
7/16 x 14	32	43	49	66	70	95	61	83
7/16 x 20	36	49	55	75	78	106	--	--
1/2 x 13	49	66	75	102	107	145	93	126
1/2 x 20	55	75	85	115	120	163	--	--
9/16 x 12	70	95	109	148	154	209	134	182
9/16 x 18	78	106	121	164	171	232	--	--
5/8 x 11	97	132	150	203	212	287	186	252
5/8 x 18	110	149	170	230	240	325	--	--

Table 8: Torque Values for Applications of LocTite 262

Bolt Size	Bolt Grade							
	Grade 2		Grade 5		Grade 8		Grade BC	
	Pound-feet	N-m	Pound-feet	N-m	Pound-feet	N-m	Pound-feet	N-m
3/4 x 10	155	210	240	325	338	458	296	401
3/4 x 16	173	235	267	362	378	512	--	--
7/8 x 9	150	203	386	523	546	740	477	647
7/8 x 14	165	224	426	578	601	815	--	--

Table 9: Torque Values for Applications of LocTite 272 (High Temperature)

	Bolt Grade							
	Grade 2		Grade 5		Grade 8		Grade BC	
Bolt Size	Pound-feet	N-m	Pound-feet	N-m	Pound-feet	N-m	Pound-feet	N-m
1 x 8	350	475	901	1222	1272	1725	1114	1510
1 x 12	383	519	986	1337	1392	1887	--	--
1 x 14	393	533	1012	1372	1428	1936	--	--
1-1/8 x 7	496	672	1111	1506	1802	2443	1577	2138
1-1/8 x 12	556	754	1247	1691	2022	2741	--	--
1-1/4 x 7	700	949	1568	2126	2544	3449	2226	3018
1-1/4 x 12	774	1049	1737	2355	2816	3818	--	--
1-3/8 x 6	917	1243	2056	2788	3335	4522	2919	3958
1-3/8 x 12	1044	1415	2341	3174	3797	5148	--	--
1-1/2 x 6	1217	1650	2729	3700	4426	6001	3873	5251
1-1/2 x 12	1369	1856	3071	4164	4980	6752	--	--

Table 10: Torque Values for Applications of LocTite 277

	Bolt Grade							
	Grade 2		Grade 5		Grade 8		Grade BC	
Bolt Size	Pound-feet	N-m	Pound-feet	N-m	Pound-feet	N-m	Pound-feet	N-m
1 x 8	325	441	837	1135	1181	1601	1034	1402
1 x 12	356	483	916	1242	1293	1753	--	--
1 x 14	365	495	939	1273	1326	1798	--	--
1-1/8 x 7	461	625	1032	1399	1674	2270	1464	1985
1-1/8 x 12	516	700	1158	1570	1877	2545	--	--
1-1/4 x 7	650	881	1456	1974	2362	3202	2067	2802
1-1/4 x 12	719	975	1613	2187	2615	3545	--	--
1-3/8 x 6	851	1154	1909	2588	3097	4199	2710	3674
1-3/8 x 12	970	1315	2174	2948	3526	4781	--	--
1-1/2 x 6	1130	1532	2534	3436	4110	5572	3597	4877
1-1/2 x 12	1271	1723	2852	3867	4624	6269	--	--

1.2. Stainless Steel Fasteners

Table 11: Torque Values for Stainless Steel Fasteners 5/16-inch and Smaller

	316 Stainless		18-8 Stainless		18-8 Stainless with Loctite 767	
Nominal Bolt Size	Pound-Inches	N-m	Pound-Inches	N-m	Pound-Inches	N-m
1/4 x 20	79	9	76	9	45	5
1/4 x 28	100	11	94	11	56	6
5/16 x 18	138	16	132	15	79	9
5/16 x 24	148	17	142	16	85	10

Table 12: Torque Values for Stainless Steel Fasteners Larger Than 5/16-inch

Bolt Size	316 Stainless		18-8 Stainless		18-8 Stainless with Loctite 767	
	Pound-feet	N-m	Pound-feet	N-m	Pound-feet	N-m
3/8 x 16	21	28	20	27	12	16
3/8 x 24	23	31	22	29	13	18
7/16 x 14	33	44	31	42	19	25
7/16 x 20	35	47	33	45	20	27
1/2 x 13	45	61	43	58	26	35
1/2 x 20	47	64	45	61	27	37
9/16 x 12	59	81	57	77	34	46
9/16 x 18	66	89	63	85	38	51
5/8 x 11	97	131	93	125	56	75
5/8 x 18	108	150	104	141	62	84
3/4 x 10	132	179	128	173	77	104
3/4 x 16	130	176	124	168	75	101
7/8 x 9	203	275	194	263	116	158
7/8 x 14	202	273	193	262	116	157
1 x 8	300	406	287	389	172	233
1 x 14	271	367	259	351	156	211
1-1/8 x 7	432	586	413	560	248	336
1-1/8 x 12	408	553	390	529	234	317
1-1/4 x 7	546	740	523	709	314	425
1-1/4 x 12	504	683	480	651	288	390
1-1/2 x 6	930	1261	888	1204	533	722
1-1/2 x 12	732	992	703	953	422	572

2. Preparation

WARNING 1: Fire Hazard—Some solvents and primer products are flammable.

- Use in a well ventilated area.
- Do not use flammable products near ignition sources.

1. Clean all threads with a wire brush, a tap, or a die.
2. Degrease the fasteners and the mating threads with a cleaning solvent. Wipe the parts dry.

   Note 2: LocTite 7649 Primer N™ will remove grease from parts, but it costs more than a standard organic or petroleum solvent.

3. Prime the fasteners and the mating threads with LocTite 7649 Primer N™ or equal. Allow the primer to dry for at least one minute.

3. Application of Threadlocking Compound

CAUTION 2: Malfunction Hazard—Improper application of threadlocking compounds may result in fasteners becoming loose from impact, heat, or vibration. Loose fasteners can cause the equipment to malfunction.

- Read and follow the threadlocking compound manufacturer's instructions and warnings.

Apply threadlocking compound to the thread engagement areas of fasteners and mating threads only.

Figure 2: Blind Hole

Application	Coverage
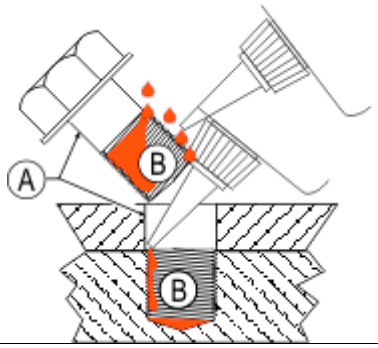	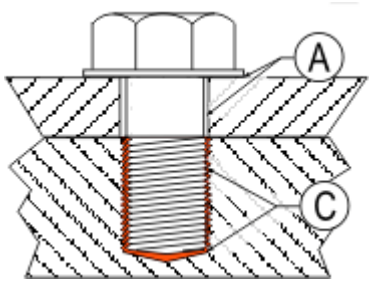

Legend

A. No threadlocking compound here
B. Apply here
C. Fill all gaps with threadlocking compound

3.1. Blind Holes

1. Apply several drops of threadlocking compound down the female threads to the bottom of the hole.
2. Apply several drops of threadlocking compound to the bolt.
3. Tighten bolt to value shown in the appropriate table (Table 5 through Table 11).

3.2. Through Holes

1. Insert bolt through assembly.
2. Apply several drops of threadlocking compound to the bolt thread area that will engage the nut.
3. Tighten bolt to value shown in the appropriate table (Table 5 through Table 11).

Figure 3: Through Hole

Application	Legend
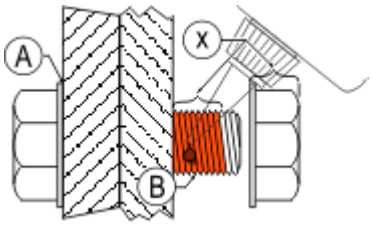	**A.** No threadlocking compound here **B.** Cover this area **x.** Nut depth

3.3. Disassembly—For low-strength and medium-strength products, disassemble with hand tools.

For high-strength products, apply localized heat for five minutes. Disassemble with hand tools while the parts are still hot.

Figure 4: Disassembly

Use Localized Heat	Legend
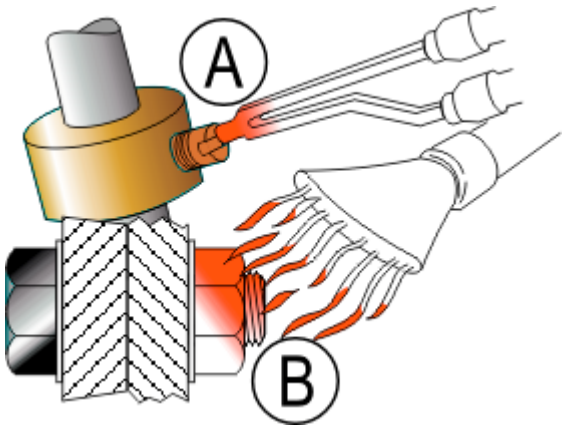	**A.** Soldering gun heating small fastener **B.** Torch heating large fastener

— End of BIUUUM04 —

Dimensional Drawings

2

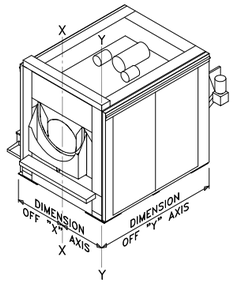

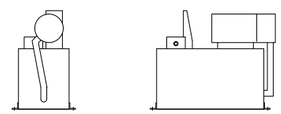

H1 SIDE VIEWS HYDRAULIC TANK

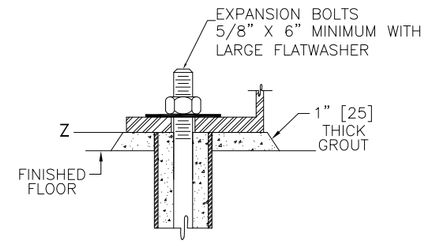

INSTALLATION DETAIL

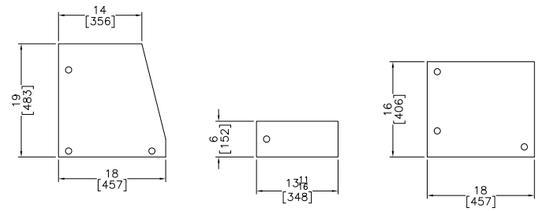

BASE PAD DETAILS

CBW	DIMENSION "C" INCHES	DIMENSION "C" mm
76028	8 3/4	222
76032	4 11/16	119
76039	8 3/4	222

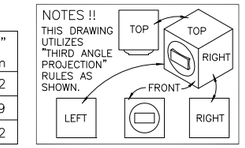

MMV,MXV,M9V42032 DISCHARGE HEIGHTS	DIMENSION "A" INCHES	DIMENSION "A" mm	DIMENSION "B" INCHES	DIMENSION "B" mm
STANDARD	117 3/4	2991	26	660
24" EXTENSION	139 1/2	3543	36	914
48" EXTENSION	161 1/2	4102	46	1168

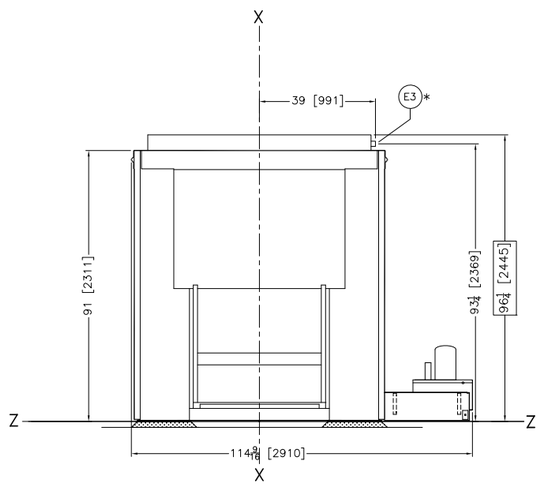

REAR VIEW

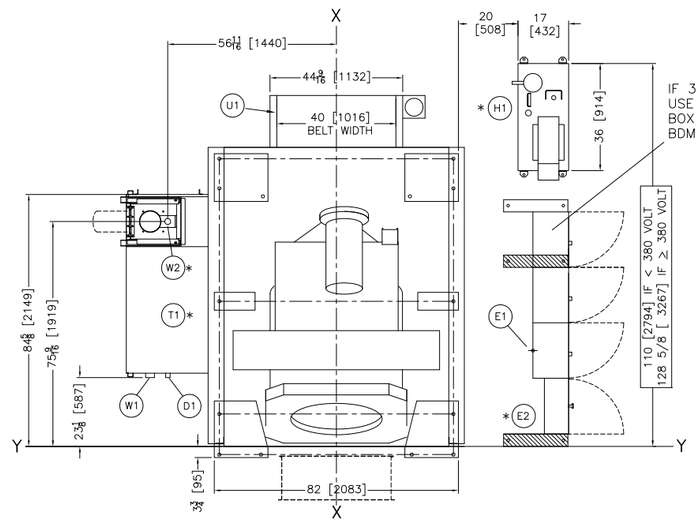

PLAN VIEW

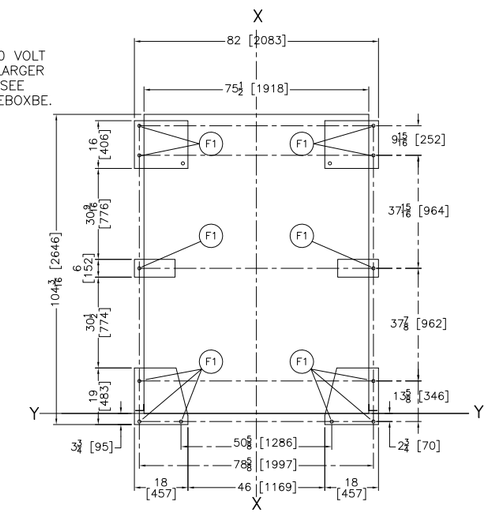

FOUNDATION PLAN VIEW

ITEM	LEGEND
W2	REUSE PUMP, WATER TO TUNNEL, 2" HOSE CONNECTION
W1	WATER FROM LAST MODULE OF TUNNEL, 3" NPT, PIPING SUPPLED BY PMC.
T1	REUSE WATER TANK, MUST KEEP LEVEL AT ALL TIMES.
N2	LOAD CHUTE GUARD (NOT USED 76032)
N1	SCUPPER AND PAN ONLY USED WHEN DIRECTLY LOADED BY ANY MILNOR TUNNEL.
F1	TWELVE, 1-1/16"[27] DIA. ANCHOR BOLT HOLES. USE 5/8" ANCHOR BOLTS MINIMUM.
H1	HYDRAULIC BOX (REQUIRES NO EXTERNAL CONNECTIONS).
E3	MAIN CABLE ENTRANCE COMING FROM CONTROL CONSOLE.
E2	CONTROLS, SEE BDM7EBOXBE.
E1	MAIN ELECTRIC SERVICE CONNECTION. REFER TO FACTORY FOR DETAIL OR WIRE SIZE AND FUSING REQUIREMENT.
D1	MANUAL DRAIN VALVE, 2" NPT CONNECTION
B1	TUNNEL DISCHARGE RING
A1	COMPRESSED AIR INLET, 1" NPT, FEMALE CONNECTION. RUN MINIMUM 1" PIPE. FOR LINES LONGER THAN 75 FEET [23 METERS], RUN 1 1/4" PIPE. LOCATED ON SIDE OPPOSITE OF ELECTRICS.

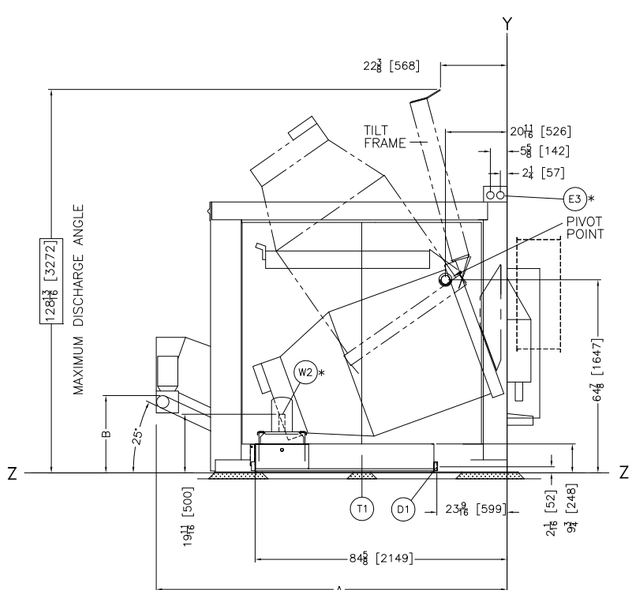

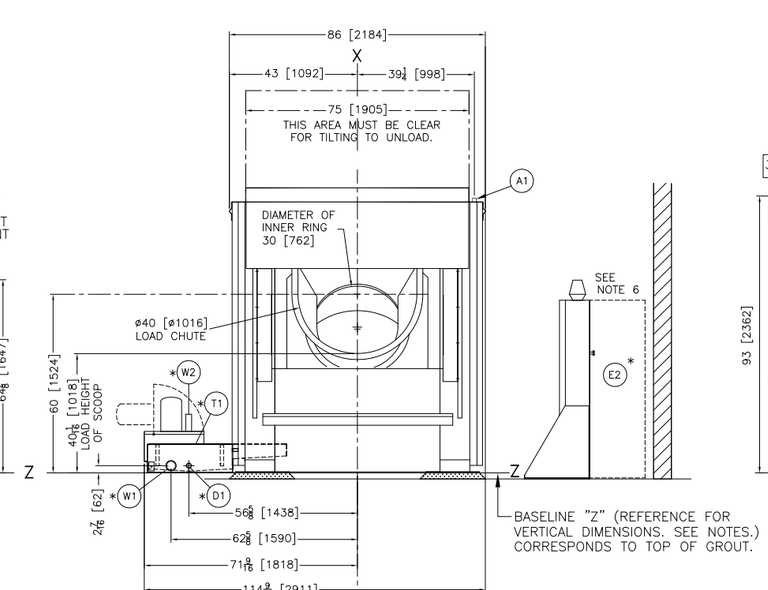

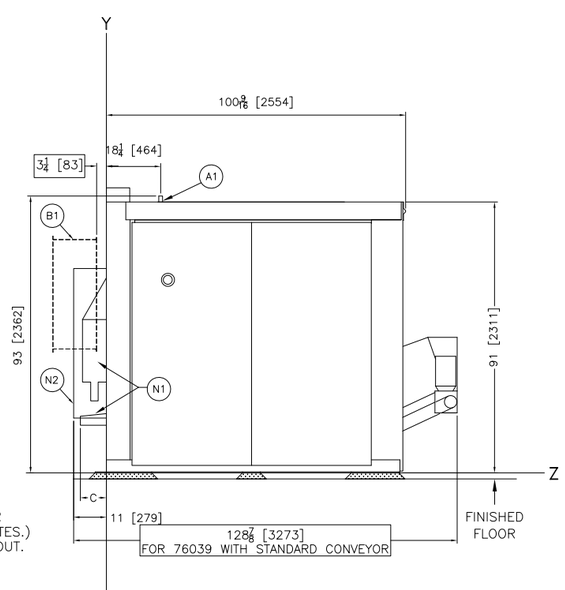

NOTES

13 SHIM TO LEVEL THE MACHINE AND ALLOW FOR 1" [25] MINIMUM GROUT UNDER BASEPADS. ANCHOR ALL ANCHOR BOLT HOLES, USE 5/8" X 6" BOLTS, MINIMUM. SEE INSTALLATION MAINTENANCE MANUAL FOR FURTHER INSTRUCTIONS.

12 WHEN THE CENTRIFUGAL EXTRACTOR MUST BE RAISED ON A PEDESTAL BASE, IT IS ALSO NECESSARY TO RAISE THE REUSE WATER TANK THE SAME HEIGHT AS THE EXTRACTOR WITH PROPER SUPPORT.

11 SEE BDM7E42CAB FOR OPTIONS AND BDM7EDRNAE FOR RECOMMENDED DRAIN TROUGH (FOR JUST EXTRACTOR OR EXTRACTOR AND COBUK COMBINATION).

10 EXTRACTOR WATER TANK AVAILABLE ONLY ON LEFT SIDE IF CENTER DISCHARGE.

9 DO NOT PRE-PIPE ANY CLOSER THAN 60 [1524].

8 ANCHOR BOLTS MUST BE INSTALLED FOR ALL MOUNTING HOLES. 1 [25] THICK GROUT UNDER ALL BASE PADS SHOWN SHADED IN PLAN VIEW.

7 * INDICATES THAT ENTRANCE CAN BE LOCATED ON LEFT OR RIGHT SIDE.

6 AS OF THIS WRITING, THE MINIMUM CLEARANCE REQUIRED BY U.S. NATIONAL ELECTRIC CODES, FROM ELECTRIC BOX TO ANY OBJECT IS:
36 [914] IF OBJECT IS AN UNGROUNDED (INSULATED) WALL.
42 [1067] IF OBJECT IS A GROUNDED WALL (ie. BARE CONCRETE, BRICK, ETC.)
48 [1219] IF OBJECT IS ANY LIVE PART.
CHECK LOCAL ELECTRIC CODES FOR FURTHER RESTRICTIONS.

5 CUSTOMER TO SUPPLY CIRCUIT BREAKER OR FUSED BRANCH CIRCUIT DISCONNECT (SAFETY) SWITCHES WITH LAG TYPE FUSES FROM POWER SOURCE TO MACHINE. A SEPARATE GROUND WIRE MUST BE CONNECTED FROM DISCONNECT TO EQUIPMENT.

4 BASELINE "Z" IS THE SAME FOR ALL MILNOR MACHINES AND IS SHOWN ON ALL DIMENSIONAL DRAWINGS. THE DISTANCE BETWEEN BASELINE "Z" AND THE FINISHED FLOOR MAY VARY (WITH CHANGES IN FLOOR HEIGHT) AS REQUIRED TO INSURE THAT BASELINE "Z" IS HORIZONTAL AND ALL COMPONENTS REQUIRING GROUT ARE SET ON A MINIMUM 1" [25] THICK GROUT BED.

3 USE REFERENCE LINES "X", "Y", AND "Z" TO LOCATE ALL SERVICE CONNECTIONS.

2 NUMBERS IN BRACKETS [] DENOTE DIMENSIONS IN MILLIMETERS.

1 ALL DIMENSIONS SHOWN ARE APPROXIMATE, SUBJECT TO NORMAL MANUFACTURING TOLERANCES, AND TO OCCASIONAL CHANGES WITHOUT NOTICE THROUGH REDESIGN AND/OR RELOCATION OF COMPONENTS, ETC. DO NOT USE FOR CONSTRUCTION UNLESS CERTIFIED, AND IN NO EVENT PRE-PIPE CLOSER THAN FIVE FEET FROM MACHINE. FACTORY MUST BE CONSULTED FOR DIMENSIONS IF MACHINE IS TO BE MOVED THROUGH NARROW OR LOW CORRIDORS OR OPENINGS.

ATTENTION

MOST REGULATORY AUTHORITIES (INCLUDING OSHA IN THE USA) HOLD THE OWNER/USER ULTIMATELY RESPONSIBLE TO MAINTAIN A SAFE WORKING ENVIRONMENT. ACCORDINGLY, THE OWNER/USER MUST RECOGNIZE ALL FORESEEABLE SAFETY HAZARDS, FURNISH SAFETY INSTRUCTIONS AND GUIDANCE TO ALL PERSONNEL WHO MAY COME IN CONTACT WITH THE INSTALLATION, AND PROVIDE ALL NECESSARY ADDITIONAL SAFETY GUARDS, FENCES, RESTRAINTS, DEVICES, ETC., NOT FURNISHED BY THE EQUIPMENT MANUFACTURER OR VENDOR.

ATTENTION

THE FLOOR AND/OR OTHER SUPPORT COMPONENTS MUST HAVE SUFFICIENT STRENGTH (AND RIGIDITY WITH DUE CONSIDERATION FOR NATURAL OR RESONANT FREQUENCY THEREOF) TO WITHSTAND THE FULLY LOADED WEIGHT OF THE MACHINE INCLUDING THE GOODS, THE WATER, AND ANY REPEATED SINUSOIDAL (ROTATING) FORCES GENERATED DURING ITS OPERATION. WRITE THE FACTORY FOR ADDITIONAL MACHINE DATA FOR USE BY A COMPETENT SOIL AND/OR STRUCTURAL ENGINEER.

MMV,MXV,M9V42032C

DM 0 0.5M 1M
INCHES 0 12 24 36

DWG# BDM7E42CCE 2016205D

PELLERIN MILNOR CORPORATION
P.O. Box 400 Kenner, LA 70063, USA, Phone 504/467-9591,
FAX 504/468-3094, Email: milnorinfo@milnor.com

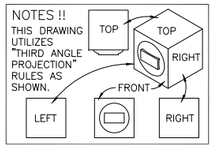

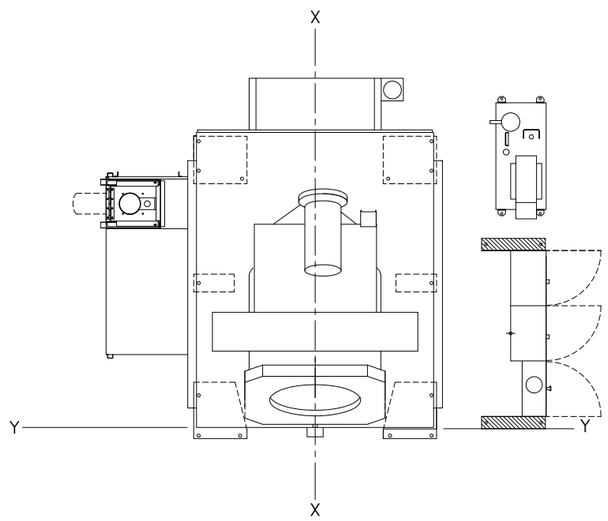

PLAN VIEW

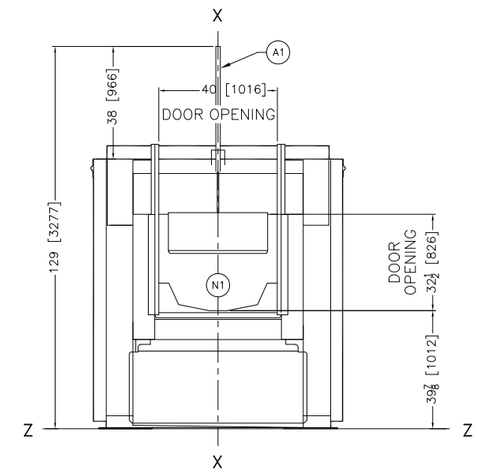

OPTIONAL DOOR
FOR STANDALONE EXTRACTOR

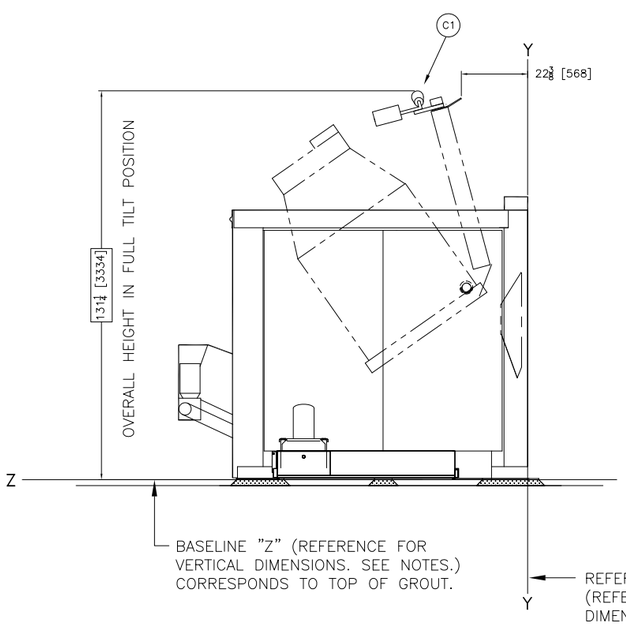

LEFT VIEW

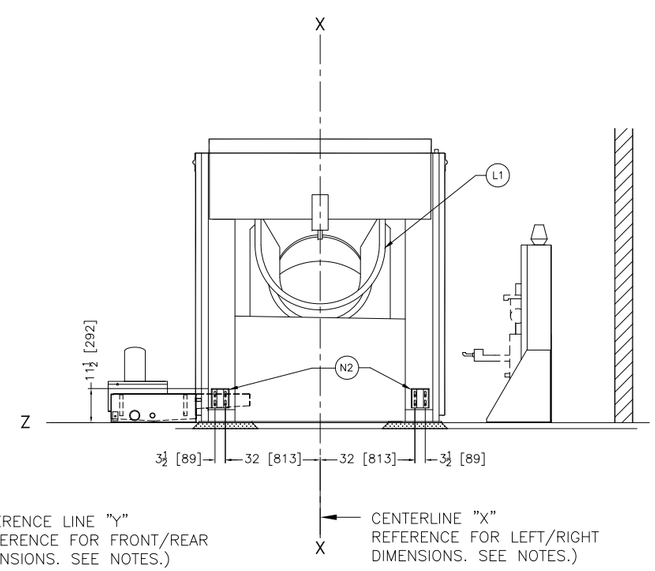

FRONT (LOAD END) VIEW

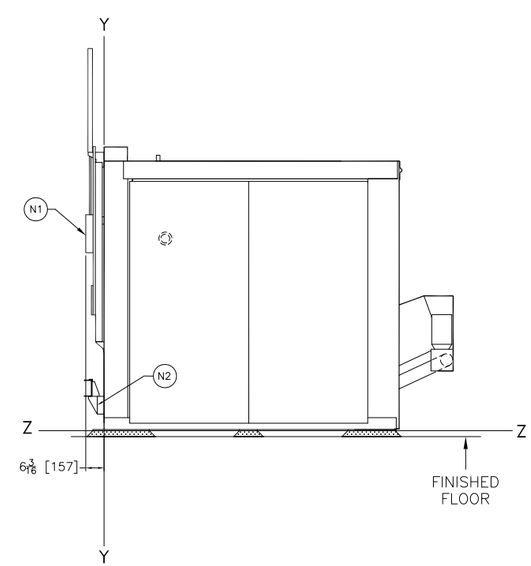

RIGHT VIEW

ITEM	LEGEND
N2	EXTRACTOR/COBUC OUTRIGGER RAIL BRACKET, WHEN USED.
N1	OPTIONAL DOOR FOR STANDALONE EXTRACTOR
L1	LOAD CHUTE NOT USED WITH STANDALONE DOOR.
C1	MODIFICATIONS FOR "COTTON MOD" WITH INFLATABLE RIBS
A1	AIR CYLINDER FOR OPTIONAL DOOR

NOTES

11 WHEN THE CENTRIFUGAL EXTRACTOR MUST BE RAISED ON A PEDESTAL BASE, IT IS ALSO NECESSARY TO RAISE THE REUSE WATER TANK THE SAME HEIGHT AS THE EXTRACTOR WITH PROPER SUPPORT.

10 SEE BDM7EDRNAE FOR RECOMMENDED DRAIN TROUGH.

9 EXTRACTOR WATER TANK AVAILABE ONLY ON LEFT SIDE IF CENTER DISCHARGE.

8 DO NOT PRE-PIPE ANY CLOSER THAN 60 [1524].

7 ANCHOR BOLTS MUST BE INSTALLED FOR ALL MOUNTING HOLES. 1 [25] THICK GROUT UNDER ALL BASE PADS SHOWN SHADED IN PLAN VIEW.

6 AS OF THIS WRITING, THE MINIMUM CLEARANCE REQUIRED BY U.S. NATIONAL ELECTRIC CODES, FROM ELECTRIC BOX TO ANY OBJECT IS:
36 [914] IF OBJECT IS AN UNGROUNDED (INSULATED) WALL.
42 [1067] IF OBJECT IS A GROUNDED WALL (ie. BARE CONCRETE, BRICK, ETC.)
48 [1219] IF OBJECT IS ANY LIVE PART.
CHECK LOCAL ELECTRIC CODES FOR FURTHER RESTRICTIONS.

5 CUSTOMER TO SUPPLY CIRCUIT BREAKER OR FUSED BRANCH CIRCUIT DISCONNECT (SAFETY) SWITCHES WITH LAG TYPE FUSES FROM POWER SOURCE TO MACHINE. A SEPARATE GROUND WIRE MUST BE CONNECTED FROM DISCONNECT TO EQUIPMENT.

4 BASELINE "Z" IS THE SAME FOR ALL MILNOR MACHINES AND IS SHOWN ON ALL DIMENSIONAL DRAWINGS. THE DISTANCE BETWEEN BASELINE "Z" AND THE FINISHED FLOOR MAY VARY (WITH CHANGES IN FLOOR HEIGHT) AS REQUIRED TO INSURE THAT BASELINE "Z" IS HORIZONTAL AND ALL COMPONENTS REQUIRING GROUT ARE SET ON A MINIMUM 1" [25] THICK GROUT BED.

3 USE REFERENCE LINES "X", "Y", AND "Z" TO LOCATE ALL SERVICE CONNECTIONS.

2 NUMBERS IN BRACKETS [] DENOTE DIMENSIONS IN MILLIMETERS.

1 ALL DIMENSIONS SHOWN ARE APPROXIMATE, SUBJECT TO NORMAL MANUFACTURING TOLERANCES, AND TO OCCASIONAL CHANGES WITHOUT NOTICE THROUGH REDESIGN AND/OR RELOCATION OF COMPONENTS, ETC. DO NOT USE FOR CONSTRUCTION UNLESS CERTIFIED, AND IN NO EVENT PRE-PIPE CLOSER THAN FIVE FEET FROM MACHINE. FACTORY MUST BE CONSULTED FOR DIMENSIONS IF MACHINE IS TO BE MOVED THROUGH NARROW OR LOW CORRIDORS OR OPENINGS.

ATTENTION

MOST REGULATORY AUTHORITIES (INCLUDING OSHA IN THE USA) HOLD THE OWNER/USER ULTIMATELY RESPONSIBLE TO MAINTAIN A SAFE WORKING ENVIRONMENT. ACCORDINGLY, THE OWNER/USER MUST RECOGNIZE ALL FORESEEABLE SAFETY HAZARDS, FURNISH SAFETY INSTRUCTIONS AND GUIDANCE TO ALL PERSONNEL WHO MAY COME IN CONTACT WITH THE INSTALLATION, AND PROVIDE ALL NECESSARY ADDITIONAL SAFETY GUARDS, FENCES, RESTRAINTS, DEVICES, ETC., NOT FURNISHED BY THE EQUIPMENT MANUFACTURER OR VENDOR.

ATTENTION

THE FLOOR AND/OR OTHER SUPPORT COMPONENTS MUST HAVE SUFFICIENT STRENGTH (AND RIGIDITY WITH DUE CONSIDERATION FOR NATURAL OR RESONANT FREQUENCY THEREOF) TO WITHSTAND THE FULLY LOADED WEIGHT OF THE MACHINE INCLUDING THE GOODS, THE WATER, AND ANY REPEATED SINUSOIDAL (ROTATING) FORCES GENERATED DURING ITS OPERATION. WRITE THE FACTORY FOR ADDITIONAL MACHINE DATA FOR USE BY A COMPETENT SOIL AND/OR STRUCTURAL ENGINEER.

MMV,MXV,M9V42032C OPTIONS

DM 0 0.5M 1M
INCHES 0 12 24 36

DWG# BDM7E42CCB
2012272D

PELLERIN MILNOR CORPORATION
P.O. Box 400 Kenner, LA 70063, USA, Phone 504/467-9591,
FAX 504/469-1849, Email: milnorinfo@milnor.com

NOTES !!
THIS DRAWING UTILIZES "THIRD ANGLE PROJECTION" RULES AS SHOWN.

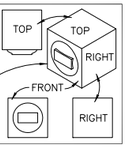

DIMENSIONS THAT VARY WITH:			DISCHARGE CONVEYOR:				
CBW:	A			B		C	
	INCHES	mm		INCHES	mm	INCHES	mm
76028	8 3/4	222	0" EXTENSION	62 1/2	1588	26 1/4	667
76032	4 11/16	119	24" EXTENSION	84 1/4	2140	36 3/8	924
76039	8 3/4	222	48" EXTENSION	106	2692	46 9/16	1182

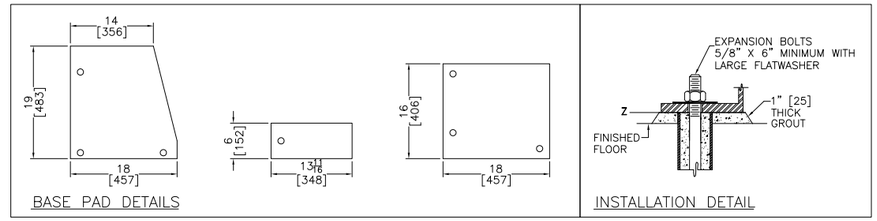

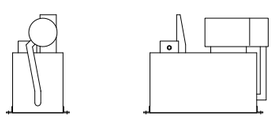

SIDE VIEWS
(H1) HYDRAULIC TANK

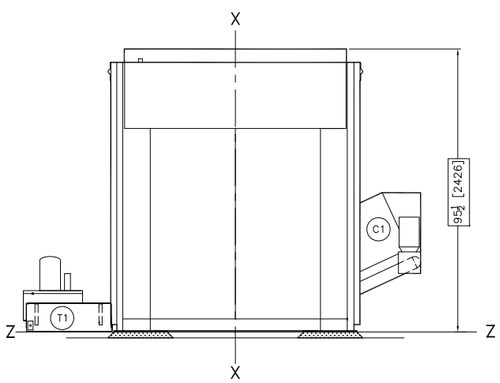

REAR VIEW

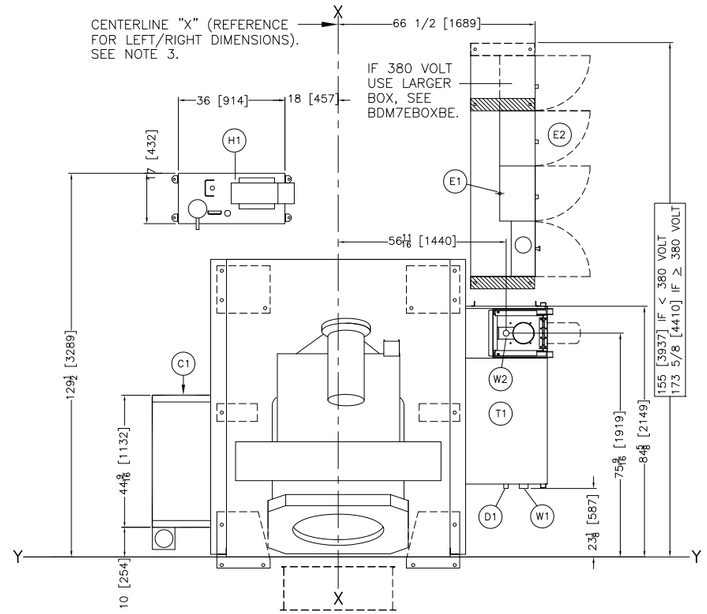

PLAN VIEW

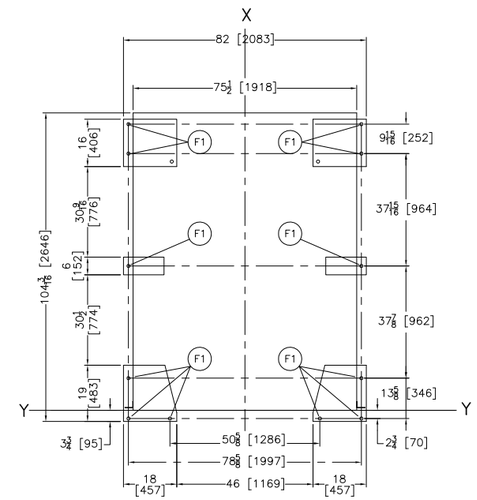

FOUNDATION PLAN VIEW

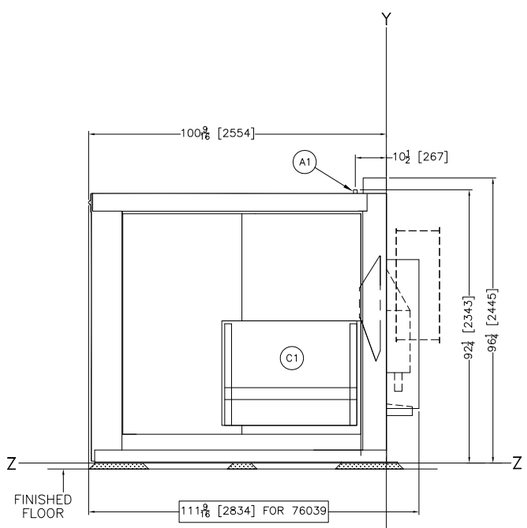

LEFT VIEW

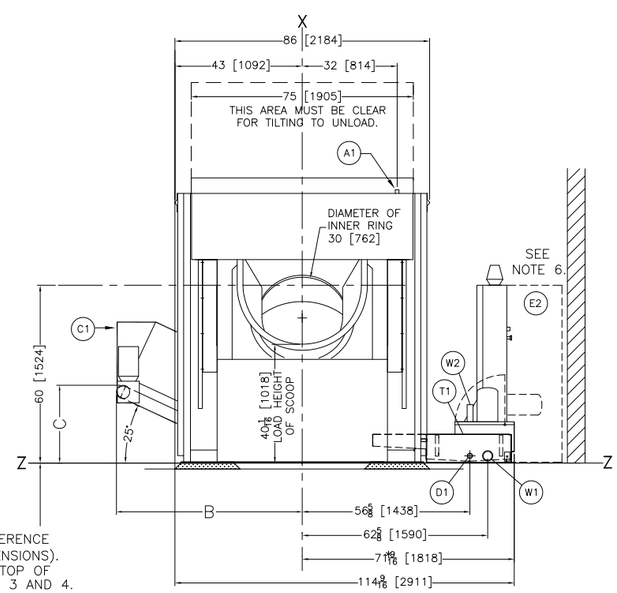

FRONT (LOAD END) VIEW

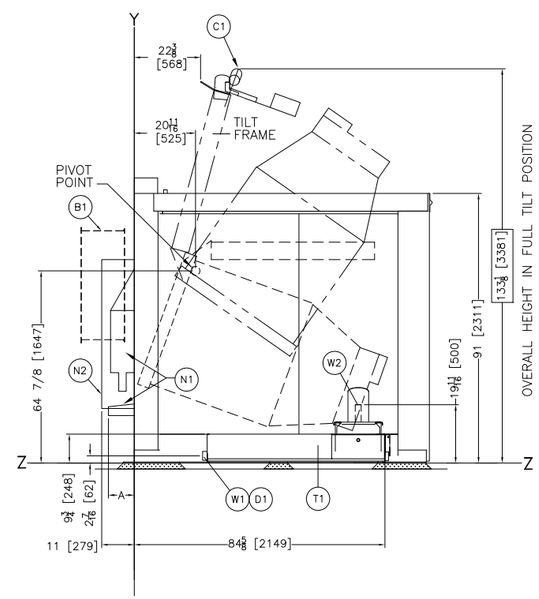

RIGHT VIEW

ITEM	LEGEND
W2	REUSE PUMP, WATER TO TUNNEL, 2" HOSE CONNECTION
W1	WATER FROM LAST MODULE OF TUNNEL, 3" NPT, PIPING
	SUPPLED BY PMC.
T1	REUSE WATER TANK, MUST KEEP LEVEL AT ALL TIMES.
N2	LOAD CHUTE GUARD (NOT USED 76032)
N1	SCUPPER AND PAN ONLY USED WHEN DIRECTLY LOADED
	BY ANY MILNOR TUNNEL.
F2	SHIPPING BOLTS HOLES, 1-1/8"[28] DIA, (8) PLACES
F1	TWELVE, 1-1/16"[27] DIA. ANCHOR BOLT HOLES. USE 5/8"
	ANCHOR BOLTS MINIMUM.
H1	HYDRAULIC UNIT (REQUIRES NO EXTERNAL CONNECTIONS).
	MAY BE ORDERED RIGHT (SHOWN) OR LEFT.
E2	CONTROL BOX, SEE BDM7EBOXBE.
E1	MAIN ELECTRIC CONNECTION. CONSULT FACTORY
	FOR DETAIL OR WIRE SIZE AND FUSING REQUIREMENT.
	ALWAYS SAME SIDE AS CENTRAL CONTROL BOX.
D1	MANUAL DRAIN VALVE, 2" NPT CONNECTION, ALWAYS ON
	SAME SIDE AS TANK .
C1	LEFT DISCHARGE CONVEYOR
A1	COMPRESSED AIR INLET 1" NPT, FEMALE CONNECTION. RUN
	MINIMUM 1" PIPE. FOR LINES LONGER THAN 75 FEET [23
	METERS], RUN 1 1/4" PIPE.

NOTES

13 SHIM TO LEVEL THE MACHINE AND ALLOW FOR 1" [25] MINIMUM GROUT UNDER BASEPADS. ANCHOR ALL ANCHOR BOLT HOLES, USE 5/8" X 6" BOLTS, MINIMUM. SEE INSTALLATION MAINTENANCE MANUAL FOR FURTHER INSTRUCTIONS.

12 WHEN THE CENTRIFUGAL EXTRACTOR MUST BE RAISED ON A PEDESTAL BASE, IT IS ALSO NECESSARY TO RAISE THE REUSE WATER TANK THE SAME HEIGHT AS THE EXTRACTOR WITH PROPER SUPPORT.

11 SEE BDM7E42SAB FOR OPTIONS AND BDM7EDRNAE FOR RECOMMENDED DRAIN TROUGH (FOR EXTRACTOR ONLY OR EXTRACTOR AND COBUK COMBINATION).

9 DO NOT PRE-PIPE ANY CLOSER THAN 60 [1524].

8 ANCHOR BOLTS MUST BE INSTALLED FOR ALL MOUNTING HOLES. 1 [25] THICK GROUT UNDER ALL BASE PADS SHOWN SHADED IN PLAN VIEW.

6 AS OF THIS WRITING, THE MINIMUM CLEARANCE REQUIRED BY U.S. NATIONAL ELECTRIC CODES, FROM ELECTRIC BOX TO ANY OBJECT IS:
36 [914] IF OBJECT IS AN UNGROUNDED (INSULATED) WALL.
42 [1067] IF OBJECT IS A GROUNDED WALL (ie. BARE CONCRETE, BRICK, ETC.)
48 [1219] IF OBJECT IS ANY LIVE PART.
CHECK LOCAL ELECTRIC CODES FOR FURTHER RESTRICTIONS.

5 CUSTOMER TO SUPPLY CIRCUIT BREAKER OR FUSED BRANCH CIRCUIT DISCONNECT (SAFETY) SWITCHES WITH LAG TYPE FUSES FROM POWER SOURCE TO MACHINE. A SEPARATE GROUND WIRE MUST BE CONNECTED FROM DISCONNECT TO EQUIPMENT.

4 BASELINE "Z" IS THE SAME FOR ALL MILNOR MACHINES AND IS SHOWN ON ALL DIMENSIONAL DRAWINGS. THE DISTANCE BETWEEN BASELINE "Z" AND THE FINISHED FLOOR MAY VARY (WITH CHANGES IN FLOOR HEIGHT) AS REQUIRED TO INSURE THAT BASELINE "Z" IS HORIZONTAL AND ALL COMPONENTS REQUIRING GROUT ARE SET ON A MINIMUM 1" [25] THICK GROUT BED.

3 USE REFERENCE LINES "X", "Y", AND "Z" TO LOCATE ALL SERVICE CONNECTIONS.

2 NUMBERS IN BRACKETS [] DENOTE DIMENSIONS IN MILLIMETERS.

1 ALL DIMENSIONS SHOWN ARE APPROXIMATE, SUBJECT TO NORMAL MANUFACTURING TOLERANCES, AND TO OCCASIONAL CHANGES WITHOUT NOTICE THROUGH REDESIGN AND/OR RELOCATION OF COMPONENTS, ETC. DO NOT USE FOR CONSTRUCTION UNLESS CERTIFIED, AND IN NO EVENT PRE-PIPE CLOSER THAN FIVE FEET FROM MACHINE. FACTORY MUST BE CONSULTED FOR DIMENSIONS IF MACHINE IS TO BE MOVED THROUGH NARROW OR LOW CORRIDORS OR OPENINGS.

ATTENTION

MOST REGULATORY AUTHORITIES (INCLUDING OSHA IN THE USA) HOLD THE OWNER/USER ULTIMATELY RESPONSIBLE TO MAINTAIN A SAFE WORKING ENVIRONMENT. ACCORDINGLY, THE OWNER/USER MUST RECOGNIZE ALL FORESEEABLE SAFETY HAZARDS, FURNISH SAFETY INSTRUCTIONS AND GUIDANCE TO ALL PERSONNEL WHO MAY COME IN CONTACT WITH THE INSTALLATION, AND PROVIDE ALL NECESSARY ADDITIONAL SAFETY GUARDS, FENCES, RESTRAINTS, DEVICES, ETC., NOT FURNISHED BY THE EQUIPMENT MANUFACTURER OR VENDOR.

ATTENTION

THE FLOOR AND/OR OTHER SUPPORT COMPONENTS MUST HAVE SUFFICIENT STRENGTH (AND RIGIDITY WITH DUE CONSIDERATION FOR NATURAL OR RESONANT FREQUENCY THEREOF) TO WITHSTAND THE FULLY LOADED WEIGHT OF THE MACHINE INCLUDING THE GOODS, THE WATER, AND ANY REPEATED SINUSOIDAL (ROTATING) FORCES GENERATED DURING ITS OPERATION. WRITE THE FACTORY FOR ADDITIONAL MACHINE DATA FOR USE BY A COMPETENT SOIL AND/OR STRUCTURAL ENGINEER.

MMV,MXV,M9V4232L

DM 0 0.5M 1M
INCHES 0 12 24 36

DWG# BDM7E42LCE 2016205D

PELLERIN MILNOR CORPORATION
P.O. Box 400 Kenner, LA 70063, USA, Phone 504/467-9591,
FAX 504/468-3094, Email: milnorinfo@milnor.com

NOTES !!
THIS DRAWING UTILIZES "THIRD ANGLE PROJECTION" RULES AS SHOWN.

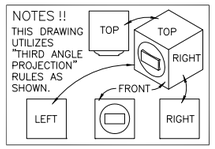

DIMENSIONS THAT VARY WITH:			DISCHARGE CONVEYOR:				
CBW:	A			B		C	
	INCHES	mm		INCHES	mm	INCHES	mm
76028	8 3/4	222	0" EXTENSION	62 1/2	1588	26 1/4	667
76032	4 11/16	119	24" EXTENSION	84 1/4	2140	36 3/8	924
76039	8 3/4	222	48" EXTENSION	106	2692	46 9/16	1182

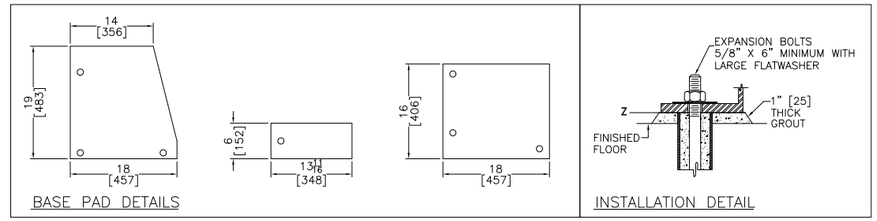

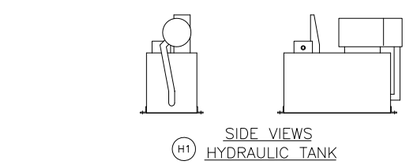

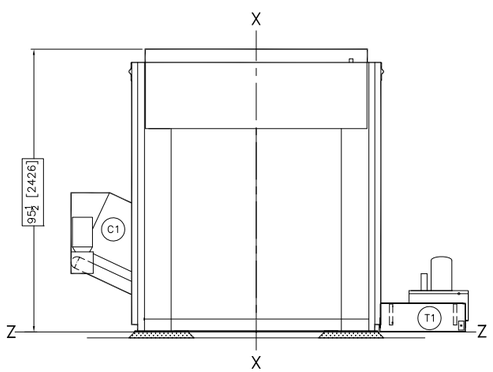

REAR VIEW

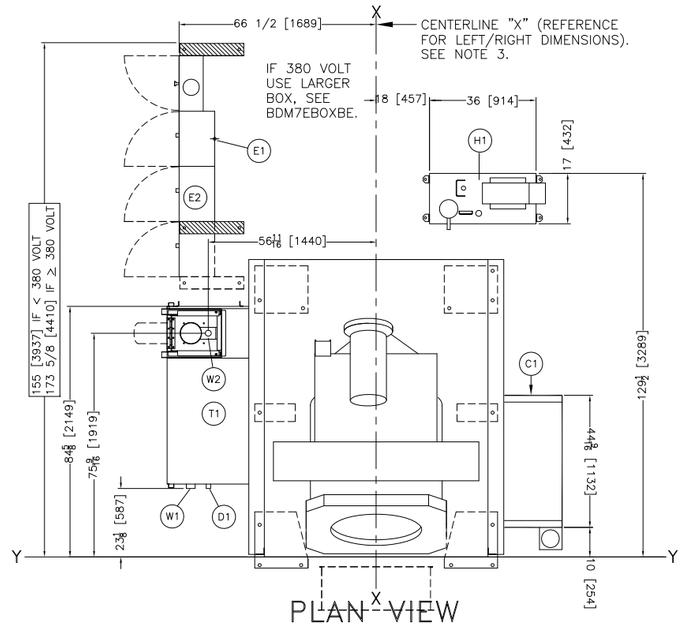

PLAN VIEW

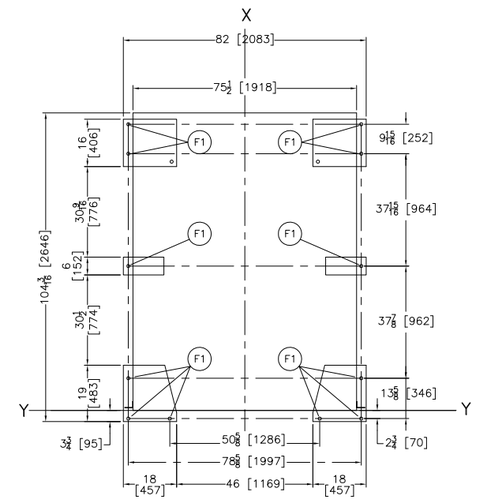

FOUNDATION PLAN VIEW

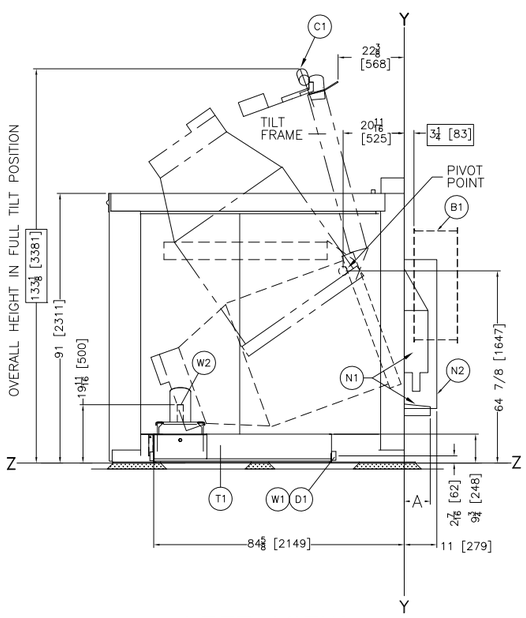

LEFT VIEW

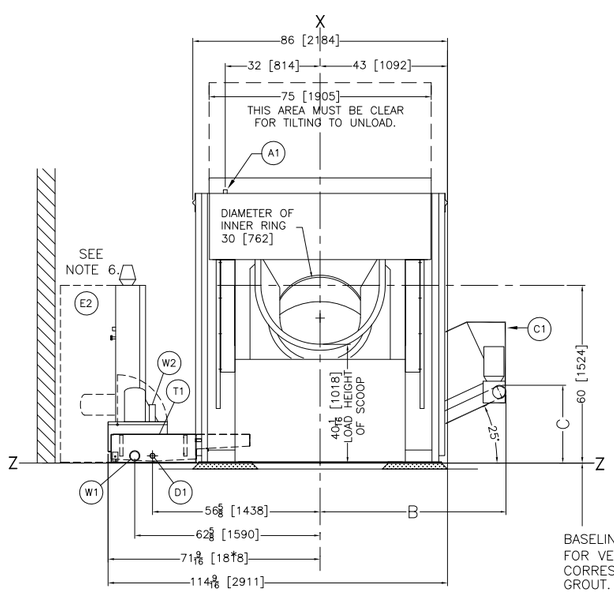

FRONT (LOAD END) VIEW

BASELINE "Z" (REFERENCE FOR VERTICAL DIMENSIONS). CORRESPONDS TO TOP OF GROUT. SEE NOTES 3 AND 4.

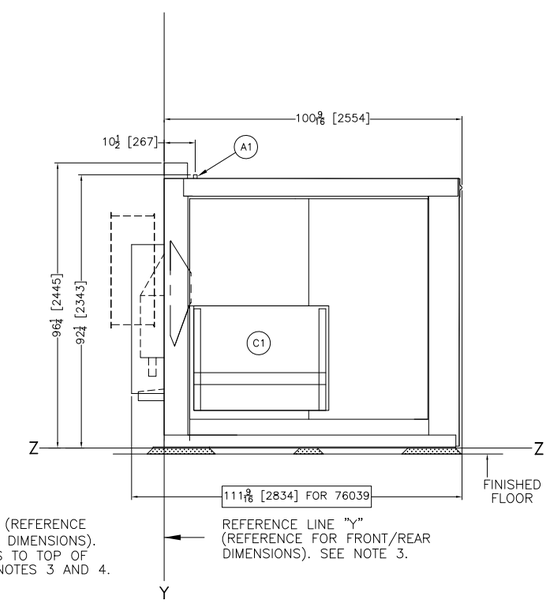

REFERENCE LINE "Y" (REFERENCE FOR FRONT/REAR DIMENSIONS). SEE NOTE 3.

RIGHT VIEW

ITEM	LEGEND
W2	REUSE PUMP, WATER TO TUNNEL, 2" HOSE CONNECTION
W1	WATER FROM LAST MODULE OF TUNNEL, 3" NPT, PIPING
	SUPPLED BY PMC.
T1	REUSE WATER TANK, MUST KEEP LEVEL AT ALL TIMES.
N2	LOAD CHUTE GUARD (NOT USED 76032)
N1	SCUPPER AND PAN ONLY USED WHEN DIRECTLY LOADED
	BY ANY MILNOR TUNNEL.
F2	SHIPPING BOLTS HOLES, 1-1/8"[28] DIA, (8) PLACES
F1	TWELVE, 1-1/16"[27] DIA. ANCHOR BOLT HOLES. USE 5/8"
	ANCHOR BOLTS MINIMUM.
H1	HYDRAULIC UNIT (REQUIRES NO EXTERNAL CONNECTIONS).
	MAY BE ORDERED LEFT (SHOWN) OR RIGHT.
E2	CONTROL BOX, SEE BDM7EBOXBE.
E1	MAIN ELECTRIC CONNECTION. CONSULT FACTORY
	FOR DETAIL OR WIRE SIZE AND FUSING REQUIREMENT.
	ALWAYS SAME SIDE AS CENTRAL CONTROL BOX.
D1	MANUAL DRAIN VALVE, 2" NPT CONNECTION, ALWAYS ON
	SAME SIDE AS TANK .
C1	RIGHT DISCHARGE CONVEYOR
B1	TUNNEL DISCHARGE RING
A1	COMPRESSED AIR INLET 1" NPT, FEMALE CONNECTION. RUN
	MINIMUM 1" PIPE. FOR LINES LONGER THAN 75 FEET [23
	METERS], RUN 1 1/4" PIPE.

NOTES

13 SHIM TO LEVEL THE MACHINE AND ALLOW FOR 1" [25] MINIMUM GROUT UNDER BASEPADS. ANCHOR ALL ANCHOR BOLT HOLES, USE 5/8" X 6" BOLTS, MINIMUM. SEE INSTALLATION MAINTENANCE MANUAL FOR FURTHER INSTRUCTIONS.

12 WHEN THE CENTRIFUGAL EXTRACTOR MUST BE RAISED ON A PEDESTAL BASE, IT IS ALSO NECESSARY TO RAISE THE REUSE WATER TANK THE SAME HEIGHT AS THE EXTRACTOR WITH PROPER SUPPORT.

11 SEE BDM7E42SAB FOR OPTIONS AND BDM7EDRNAE FOR RECOMMENDED DRAIN TROUGH (FOR EXTRACTOR ONLY OR EXTRACTOR AND COBUK COMBINATION).

9 DO NOT PRE-PIPE ANY CLOSER THAN 60 [1524].

8 ANCHOR BOLTS MUST BE INSTALLED FOR ALL MOUNTING HOLES. 1 [25] THICK GROUT UNDER ALL BASE PADS SHOWN SHADED IN PLAN VIEW.

6 AS OF THIS WRITING, THE MINIMUM CLEARANCE REQUIRED BY U.S. NATIONAL ELECTRIC CODES, FROM ELECTRIC BOX TO ANY OBJECT IS:
36 [914] IF OBJECT IS AN UNGROUNDED (INSULATED) WALL.
42 [1067] IF OBJECT IS A GROUNDED WALL (ie. BARE CONCRETE, BRICK, ETC.)
48 [1219] IF OBJECT IS ANY LIVE PART.
CHECK LOCAL ELECTRIC CODES FOR FURTHER RESTRICTIONS.

5 CUSTOMER TO SUPPLY CIRCUIT BREAKER OR FUSED BRANCH CIRCUIT DISCONNECT (SAFETY) SWITCHES WITH LAG TYPE FUSES FROM POWER SOURCE TO MACHINE. A SEPARATE GROUND WIRE MUST BE CONNECTED FROM DISCONNECT TO EQUIPMENT.

4 BASELINE "Z" IS THE SAME FOR ALL MILNOR MACHINES AND IS SHOWN ON ALL DIMENSIONAL DRAWINGS. THE DISTANCE BETWEEN BASELINE "Z" AND THE FINISHED FLOOR MAY VARY (WITH CHANGES IN FLOOR HEIGHT) AS REQUIRED TO INSURE THAT BASELINE "Z" IS HORIZONTAL AND ALL COMPONENTS REQUIRING GROUT ARE SET ON A MINIMUM 1" [25] THICK GROUT BED.

3 USE REFERENCE LINES "X", "Y", AND "Z" TO LOCATE ALL SERVICE CONNECTIONS.

2 NUMBERS IN BRACKETS [] DENOTE DIMENSIONS IN MILLIMETERS.

1 ALL DIMENSIONS SHOWN ARE APPROXIMATE, SUBJECT TO NORMAL MANUFACTURING TOLERANCES, AND TO OCCASIONAL CHANGES WITHOUT NOTICE THROUGH REDESIGN AND/OR RELOCATION OF COMPONENTS, ETC. DO NOT USE FOR CONSTRUCTION UNLESS CERTIFIED, AND IN NO EVENT PRE-PIPE CLOSER THAN FIVE FEET FROM MACHINE. FACTORY MUST BE CONSULTED FOR DIMENSIONS IF MACHINE IS TO BE MOVED THROUGH NARROW OR LOW CORRIDORS OR OPENINGS.

ATTENTION

MOST REGULATORY AUTHORITIES (INCLUDING OSHA IN THE USA) HOLD THE OWNER/USER ULTIMATELY RESPONSIBLE TO MAINTAIN A SAFE WORKING ENVIRONMENT. ACCORDINGLY, THE OWNER/USER MUST RECOGNIZE ALL FORESEEABLE SAFETY HAZARDS, FURNISH SAFETY INSTRUCTIONS AND GUIDANCE TO ALL PERSONNEL WHO MAY COME IN CONTACT WITH THE INSTALLATION, AND PROVIDE ALL NECESSARY ADDITIONAL SAFETY GUARDS, FENCES, RESTRAINTS, DEVICES, ETC., NOT FURNISHED BY THE EQUIPMENT MANUFACTURER OR VENDOR.

ATTENTION

THE FLOOR AND/OR OTHER SUPPORT COMPONENTS MUST HAVE SUFFICIENT STRENGTH (AND RIGIDITY WITH DUE CONSIDERATION FOR NATURAL OR RESONANT FREQUENCY THEREOF) TO WITHSTAND THE FULLY LOADED WEIGHT OF THE MACHINE INCLUDING THE GOODS, THE WATER, AND ANY REPEATED SINUSOIDAL (ROTATING) FORCES GENERATED DURING ITS OPERATION. WRITE THE FACTORY FOR ADDITIONAL MACHINE DATA FOR USE BY A COMPETENT SOIL AND/OR STRUCTURAL ENGINEER.

MMV,MXV,M9V4232R

DM 0 0.5M 1M
INCHES 0 12 24 36

DWG# BDM7E42RCE 2016205D

PELLERIN MILNOR CORPORATION
P.O. Box 400 Kenner, LA 70063, USA, Phone 504/467-9591,
FAX 504/468-3094, Email: milnorinfo@milnor.com

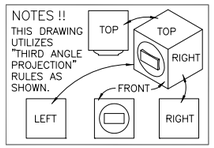

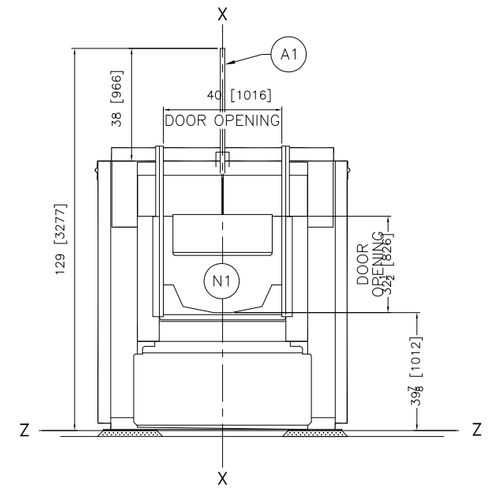

OPTIONAL DOOR
FOR STANDALONE EXTRACTOR

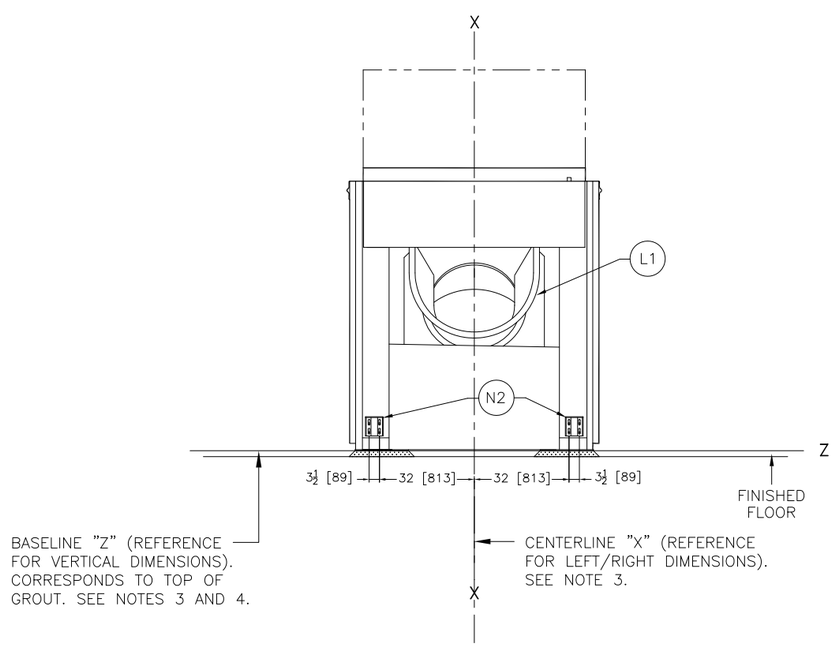

FRONT (LOAD END) VIEW

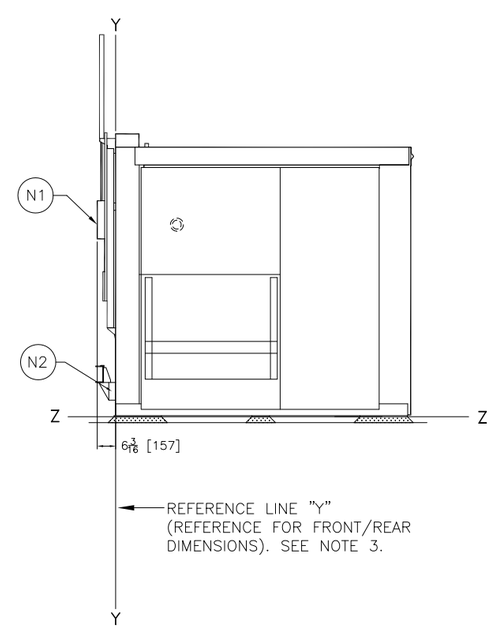

RIGHT VIEW

ITEM	LEGEND
N2	EXTRACTOR/COBUC OUTRIGGER RAIL BRACKET, WHEN USED.
N1	OPTIONAL DOOR FOR STANDALONE EXTRACTOR
L1	LOAD CHUTE, NOT USED WHEN STANDALONE DOOR IS USED.
A1	AIR CYLINDER FOR OPTIONAL DOOR

NOTES

11 WHEN THE CENTRIFUGAL EXTRACTOR MUST BE RAISED ON A PEDESTAL BASE, IT IS ALSO NECESSARY TO RAISE THE REUSE WATER TANK THE SAME HEIGHT AS THE EXTRACTOR WITH PROPER SUPPORT.

10 SEE BDM7EDRNAE FOR RECOMMENDED DRAIN TROUGH ON EXTRACTOR OR EXTRACTOR COBUK.

9 EXTRACTOR WATER TANK AVAILABLE ONLY ON LEFT SIDE IF RIGHT DISCHARGE, AND ONLY ON RIGHT SIDE IF LEFT DISCHARGE.

8 DO NOT PRE-PIPE ANY CLOSER THAN 60 [1524].

7 ANCHOR BOLTS MUST BE INSTALLED FOR ALL MOUNTING HOLES. 1 [25] THICK GROUT UNDER ALL BASE PADS SHOWN SHADED IN PLAN VIEW.

6 AS OF THIS WRITING, THE MINIMUM CLEARANCE REQUIRED BY U.S. NATIONAL ELECTRIC CODES, FROM ELECTRIC BOX TO ANY OBJECT IS:
36 [914] IF OBJECT IS AN UNGROUNDED (INSULATED) WALL.
42 [1067] IF OBJECT IS A GROUNDED WALL (ie. BARE CONCRETE, BRICK, ETC.)
48 [1219] IF OBJECT IS ANY LIVE PART.
CHECK LOCAL ELECTRIC CODES FOR FURTHER RESTRICTIONS.

5 CUSTOMER TO SUPPLY CIRCUIT BREAKER OR FUSED BRANCH CIRCUIT DISCONNECT (SAFETY) SWITCHES WITH LAG TYPE FUSES FROM POWER SOURCE TO MACHINE. A SEPARATE GROUND WIRE MUST BE CONNECTED FROM DISCONNECT TO EQUIPMENT.

4 BASELINE "Z" IS THE SAME FOR ALL MILNOR MACHINES AND IS SHOWN ON ALL DIMENSIONAL DRAWINGS. THE DISTANCE BETWEEN BASELINE "Z" AND THE FINISHED FLOOR MAY VARY (WITH CHANGES IN FLOOR HEIGHT) AS REQUIRED TO INSURE THAT BASELINE "Z" IS HORIZONTAL AND ALL COMPONENTS REQUIRING GROUT ARE SET ON A MINIMUM 1" [25] THICK GROUT BED.

3 USE REFERENCE LINES "X", "Y", AND "Z" TO LOCATE ALL SERVICE CONNECTIONS.

2 NUMBERS IN BRACKETS [] DENOTE DIMENSIONS IN MILLIMETERS.

1 ALL DIMENSIONS SHOWN ARE APPROXIMATE, SUBJECT TO NORMAL MANUFACTURING TOLERANCES, AND TO OCCASIONAL CHANGES WITHOUT NOTICE THROUGH REDESIGN AND/OR RELOCATION OF COMPONENTS, ETC. DO NOT USE FOR CONSTRUCTION UNLESS CERTIFIED, AND IN NO EVENT PRE-PIPE CLOSER THAN FIVE FEET FROM MACHINE. FACTORY MUST BE CONSULTED FOR DIMENSIONS IF MACHINE IS TO BE MOVED THROUGH NARROW OR LOW CORRIDORS OR OPENINGS.

ATTENTION

MOST REGULATORY AUTHORITIES (INCLUDING OSHA IN THE USA) HOLD THE OWNER/USER ULTIMATELY RESPONSIBLE TO MAINTAIN A SAFE WORKING ENVIRONMENT. ACCORDINGLY, THE OWNER/USER MUST RECOGNIZE ALL FORESEEABLE SAFETY HAZARDS, FURNISH SAFETY INSTRUCTIONS AND GUIDANCE TO ALL PERSONNEL WHO MAY COME IN CONTACT WITH THE INSTALLATION, AND PROVIDE ALL NECESSARY ADDITIONAL SAFETY GUARDS, FENCES, RESTRAINTS, DEVICES, ETC., NOT FURNISHED BY THE EQUIPMENT MANUFACTURER OR VENDOR.

ATTENTION

THE FLOOR AND/OR OTHER SUPPORT COMPONENTS MUST HAVE SUFFICIENT STRENGTH (AND RIGIDITY WITH DUE CONSIDERATION FOR NATURAL OR RESONANT FREQUENCY THEREOF) TO WITHSTAND THE FULLY LOADED WEIGHT OF THE MACHINE INCLUDING THE GOODS, THE WATER, AND ANY REPEATED SINUSOIDAL (ROTATING) FORCES GENERATED DURING ITS OPERATION. WRITE THE FACTORY FOR ADDITIONAL MACHINE DATA FOR USE BY A COMPETENT SOIL AND/OR STRUCTURAL ENGINEER.

MMV,MXV,M9V4232C/L/R OPTIONS

DM 0 0.5M 1M
INCHES 0 12 24 36

DWG# BDM7E42SCB
2016205D

PELLERIN MILNOR CORPORATION
P.O. Box 400 Kenner, LA 70063, USA, Phone 504/467-9591,
FAX 504/468-3094, Email: milnorinfo@milnor.com

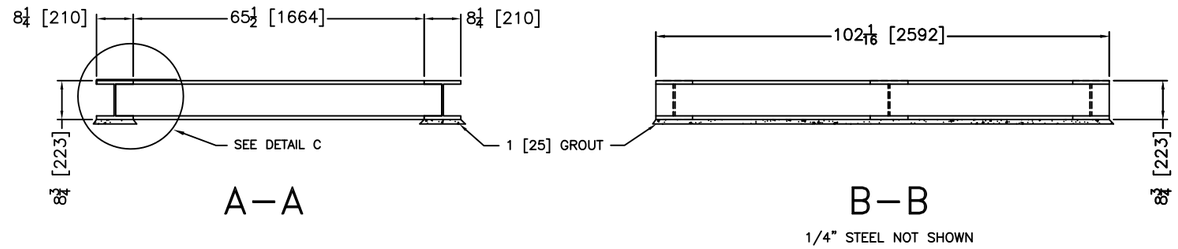

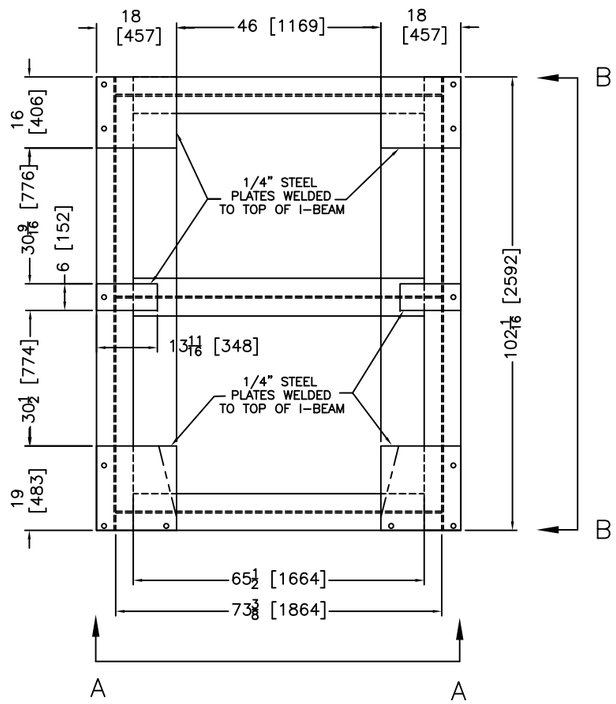

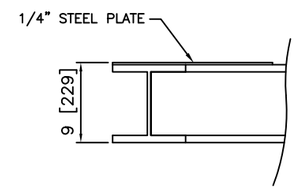

DETAIL C

NOT TO SCALE

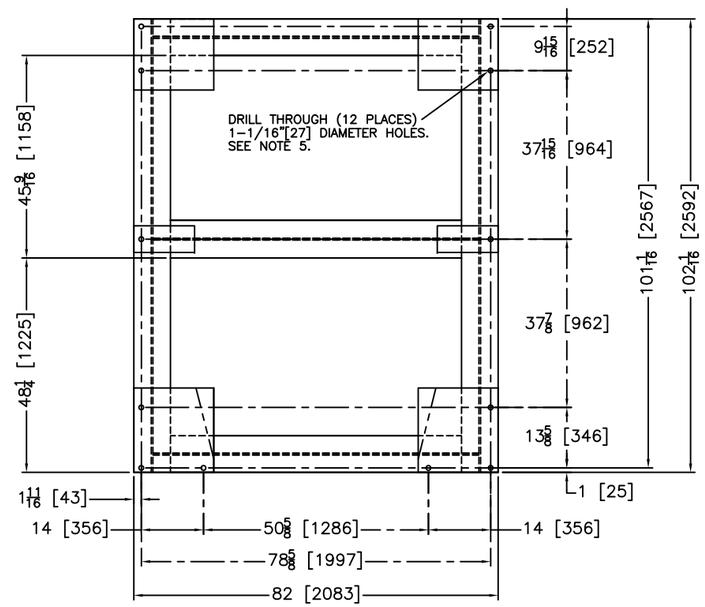

DETAIL B

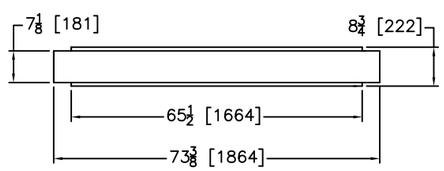

DETAIL A

1/4" STEEL NOT SHOWN

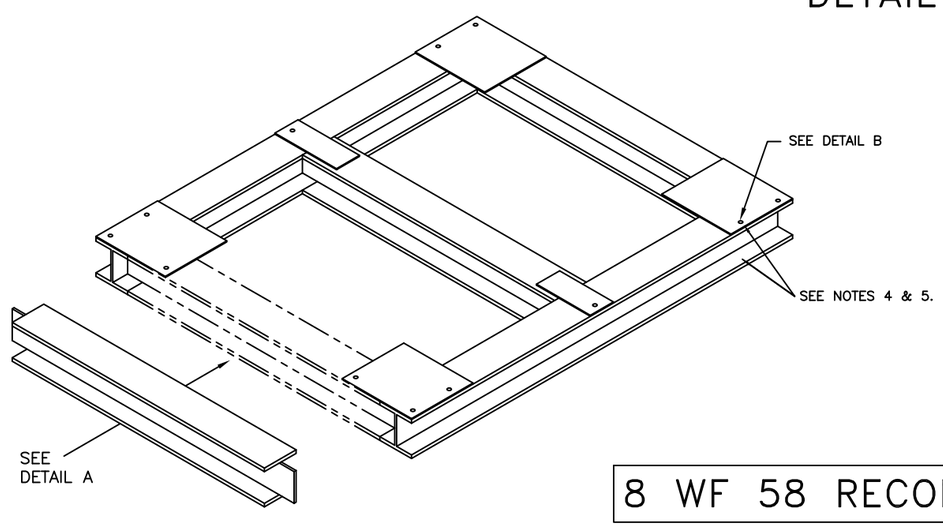

8 WF 58 RECOMMENDED

NOTES

5 THIS DRAWING SHOWS THE PEDESTAL DESIGN FOR MILNOR 42032 M7E CENTRIFUGAL EXTACTOR WITH 1/4" THICK STEEL PLATES WELDED TO TOP FOR FULL BASE PAD SUPPORT. THIS BASE MAY BE USED WHENEVER LOCAL CONDITIONS ARE SUCH THAT MACHINE OPERATION WOULD BE ENHANCED BY RAISING THE MACHINE SETTING 9 [229] INCHES.

4 IF MACHINE IS TO BE BOLTED TO PEDESTAL BASE, BOLT HOLES IN PEDESTAL TOP FLANGE SHOULD BE LOCATED AND DRILLED ONLY AFTER MACHINE IS ON SITE AND CAN BE USED AS A TEMPLATE FOR BOLT HOLE LOCATIONS. BASE IS TO BE BOLTED TO FOUNDATION, CUSTOMER MUST DETERMINE LOCATION OF BOLT HOLES IN BOTTOM FLANGE.

3 WHEN INSTALLING MACHINE AND PEDESTAL BASE, IT IS RECOMMENDED TO LAY THE PEDESTAL ON A MINIMUM 1 [25] THICK GROUT BED AND BOLT THE MACHINE TO IT. ALTERNATELY, THE MACHINE MAY BE WELDED TO THE BASE, PROVIDED IT IS SHIMMED AS REQUIRED TO INSURE THERE IS NO DISTORTION OF THE MACHINE BASE PLATES OR FRAME.

2 THIS BASE MUST BE FABRICATED LOCALLY AND SHOULD BE MADE SQUARE AND LEVEL. IT IS NOT SUPPLIED BY PELLERIN MILNOR CORP. THIS DRAWING CONVEYS NO EXPRESS OR IMPLIED WARRANTY WITH REGARD TO THE CONSTRUCTION AND/OR SUITABILITY OF THIS ASSEMBLY.

1 NUMBERS IN BRACKETS [] DENOTE DIMENSIONS IN MILLIMETERS.

ATTENTION

MOST REGULATORY AUTHORITIES (INCLUDING OSHA IN THE USA) HOLD THE OWNER/USER ULTIMATELY RESPONSIBLE TO MAINTAIN A SAFE WORKING ENVIRONMENT. ACCORDINGLY, THE OWNER/USER MUST RECOGNIZE ALL FORESEEABLE SAFETY HAZARDS, FURNISH SAFETY INSTRUCTIONS AND GUIDANCE TO ALL PERSONNEL WHO MAY COME IN CONTACT WITH THE INSTALLATION, AND PROVIDE ALL NECESSARY ADDITIONAL SAFETY GUARDS, FENCES, RESTRAINTS, DEVICES, ETC., NOT FURNISHED BY THE EQUIPMENT MANUFACTURER OR VENDOR.

ATTENTION

THE FLOOR AND/OR OTHER SUPPORT COMPONENTS MUST HAVE SUFFICIENT STRENGTH (AND RIGIDITY WITH DUE CONSIDERATION FOR NATURAL OR RESONANT FREQUENCY THEREOF) TO WITHSTAND THE FULLY LOADED WEIGHT OF THE MACHINE INCLUDING THE GOODS, THE WATER, AND ANY REPEATED SINUSOIDAL (ROTATING) FORCES GENERATED DURING ITS OPERATION. WRITE THE FACTORY FOR ADDITIONAL MACHINE DATA FOR USE BY A COMPETENT SOIL AND/OR STRUCTURAL ENGINEER.

PEDESTAL M7E/M9V/MXV4232

DM 0 0.5M 1M
INCHES 0 12 24 36

DWG# BDM7EBASBE 2009114D

PELLERIN MILNOR CORPORATION
P.O. Box 400 Kenner, LA 70063, USA, Phone 504/467-9591,
FAX 504/469-1849, Telex ITT 460124/PELM UI, Cable PELMILNOR

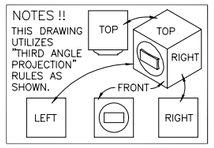

EXTRACTOR MUST BE GROUTED TO EXISTING SOLID CONCRETE FLOOR.

EXTRACTOR MUST BE KEPT LEVEL

FOR LEFT DISCHARGE EXTRACTOR, WATER TANK IS ON RIGHT SIDE.

WATER TANK MUST BE KEPT LEVEL AT ALL TIMES.

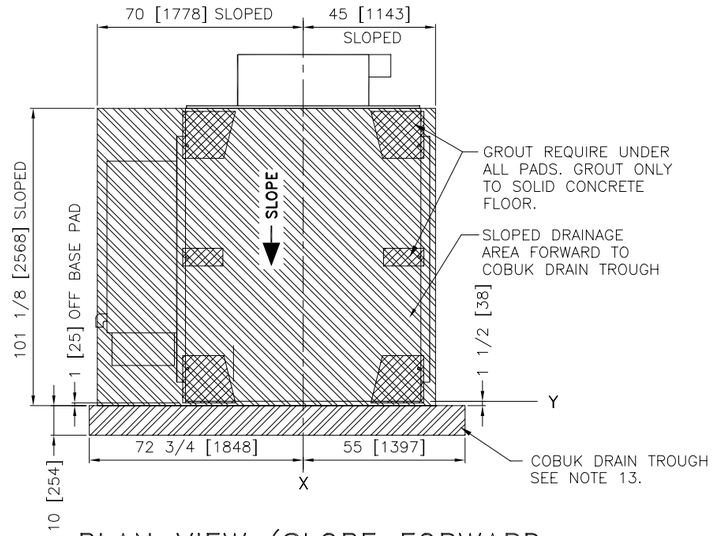

PLAN VIEW (SLOPE FORWARD WHEN COBUK IS USED

SEE PARTIAL RIGHT VIEW ON RIGHT

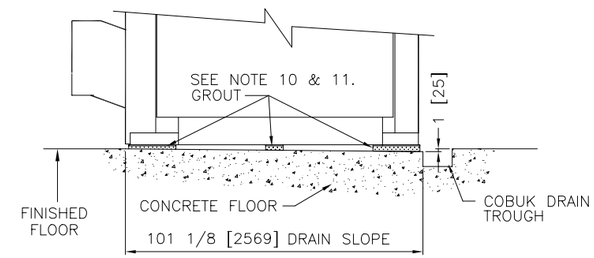

PARTIAL RIGHT VIEW WHEN COBUK IS USED

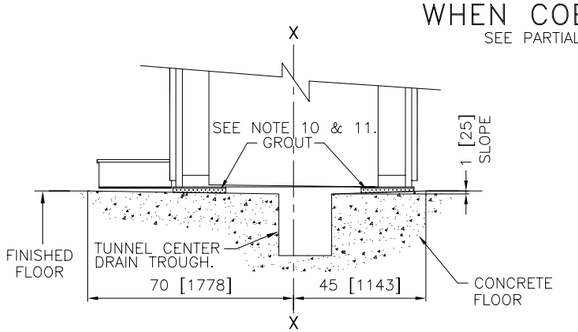

PARTIAL FRONT VIEW

TUNNEL WATER SIDE LEFT, SEE NOTE 12.

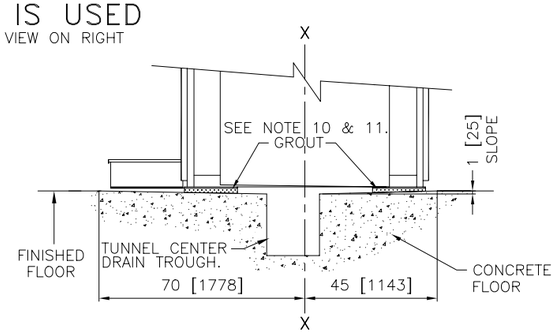

PARTIAL FRONT VIEW

TUNNEL WATER SIDE RIGHT, SEE NOTE 12.

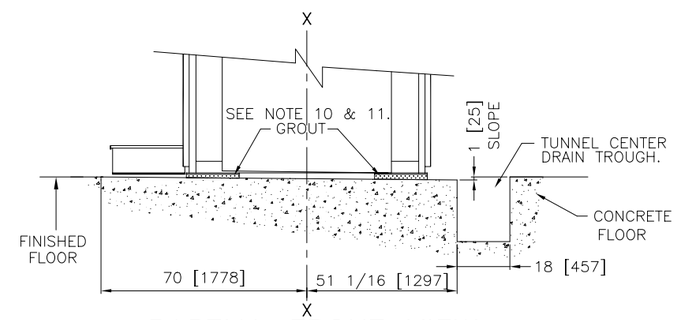

PARTIAL FRONT VIEW

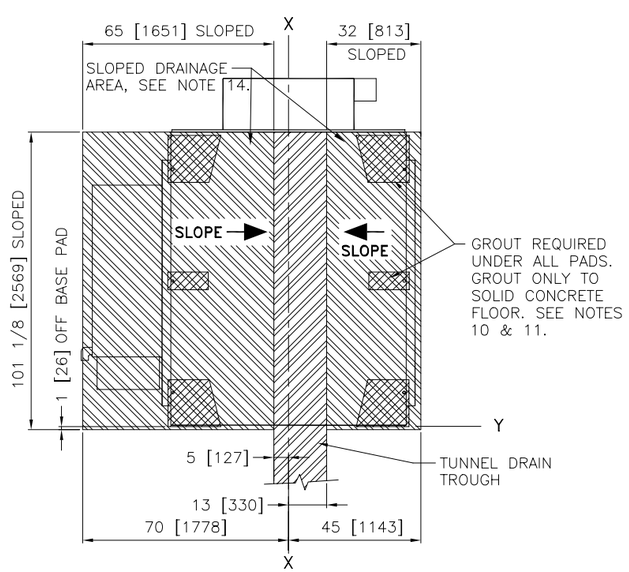

PLAN VIEW (SLOPE CENTER)

SEE PARTIAL FRONT VIEW ABOVE

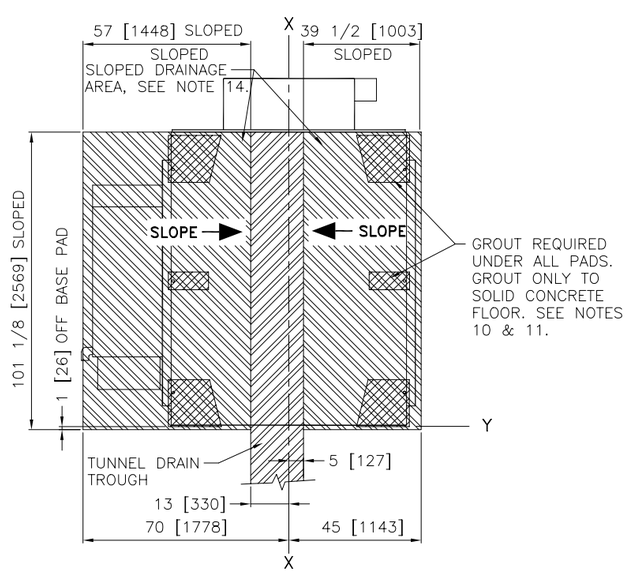

PLAN VIEW (SLOPE CENTER)

SEE PARTIAL FRONT VIEW ABOVE

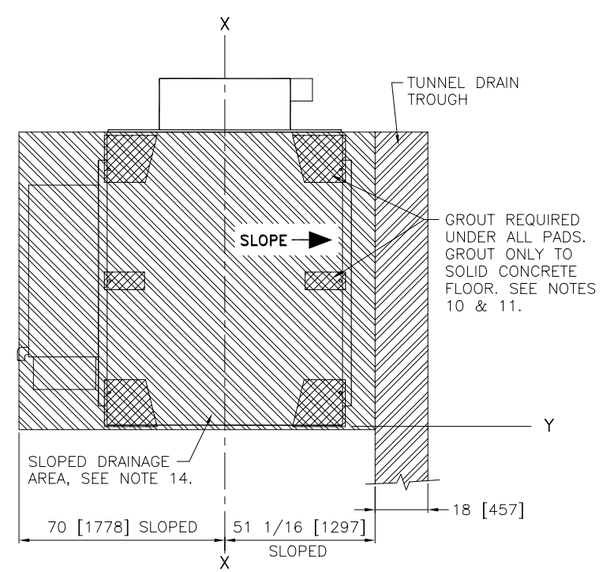

PLAN VIEW (SLOPE CENTER)

SEE PARTIAL FRONT VIEW ABOVE

NOTES

15 SEE BDM7EDRNAB FOR ADDITIONAL INFORMATION.

14 AREA UNDER EXTRACTOR IS SLOPED 1" [25] AND SLOPES TO TUNNEL DRAIN TROUGH OR COBUK DRAIN TROUGH.

13 WHEN COBUK UNLOADS TO MORE THAN ONE EXTRACTOR OR PRESS, MAKE SURE COBUK DRAIN TROUGH RUNS LENGTH OF COBUK PATH.

12 TUNNEL CENTER DRAIN TROUGH IS WIDER ON WATER SIDE OF TUNNEL.

11 EXTRACTOR MUST BE GROUTED TO SOLID CONCRETE FLOOR, ALL 6 BASE PADS.

10 CENTRIFUGAL EXTRACTOR MUST BE KEPT LEVEL ON GROUT.

9 WHEN THE CENTRIFUGAL EXTRACTOR MUST BE RAISED ON A PEDESTAL BASE, IT IS ALSO NECESSARY TO RAISE THE REUSE WATER TANK THE SAME HEIGHT AS THE EXTRACTOR WITH PROPER SUPPORT.

8 DO NOT PRE-PIPE ANY CLOSER THAN 60 [1524].

7 ANCHOR BOLTS MUST BE INSTALLED FOR ALL MOUNTING HOLES. 1 [25] THICK GROUT UNDER ALL BASE PADS SHOWN SHADED IN PLAN VIEW.

6 AS OF THIS WRITING, THE MINIMUM CLEARANCE REQUIRED BY U.S. NATIONAL ELECTRIC CODES, FROM ELECTRIC BOX TO ANY OBJECT IS:
36 [914] IF OBJECT IS AN UNGROUNDED (INSULATED) WALL.
42 [1067] IF OBJECT IS A GROUNDED WALL (ie. BARE CONCRETE, BRICK, ETC.)
48 [1219] IF OBJECT IS ANY LIVE PART.
CHECK LOCAL ELECTRIC CODES FOR FURTHER RESTRICTIONS.

5 CUSTOMER TO SUPPLY CIRCUIT BREAKER OR FUSED BRANCH CIRCUIT DISCONNECT (SAFETY) SWITCHES WITH LAG TYPE FUSES FROM POWER SOURCE TO MACHINE. A SEPARATE GROUND WIRE MUST BE CONNECTED FROM DISCONNECT TO EQUIPMENT.

4 BASELINE "Z" IS THE SAME FOR ALL MILNOR MACHINES AND IS SHOWN ON ALL DIMENSIONAL DRAWINGS. THE DISTANCE BETWEEN BASELINE "Z" AND THE FINISHED FLOOR MAY VARY (WITH CHANGES IN FLOOR HEIGHT) AS REQUIRED TO INSURE THAT BASELINE "Z" IS HORIZONTAL AND ALL COMPONENTS REQUIRING GROUT ARE SET ON A MINIMUM 1" [25] THICK GROUT BED.

3 USE REFERENCE LINES "X", "Y", AND "Z" TO LOCATE ALL SERVICE CONNECTIONS.

2 NUMBERS IN BRACKETS [] DENOTE DIMENSIONS IN MILLIMETERS.

1 ALL DIMENSIONS SHOWN ARE APPROXIMATE, SUBJECT TO NORMAL MANUFACTURING TOLERANCES, AND TO OCCASIONAL CHANGES WITHOUT NOTICE THROUGH REDESIGN AND/OR RELOCATION OF COMPONENTS, ETC. DO NOT USE FOR CONSTRUCTION UNLESS CERTIFIED, AND IN NO EVENT PRE-PIPE CLOSER THAN FIVE FEET FROM MACHINE. FACTORY MUST BE CONSULTED FOR DIMENSIONS IF MACHINE IS TO BE MOVED THROUGH NARROW OR LOW CORRIDORS OR OPENINGS.

ATTENTION

MOST REGULATORY AUTHORITIES (INCLUDING OSHA IN THE USA) HOLD THE OWNER/USER ULTIMATELY RESPONSIBLE TO MAINTAIN A SAFE WORKING ENVIRONMENT. ACCORDINGLY, THE OWNER/USER MUST RECOGNIZE ALL FORESEEABLE SAFETY HAZARDS, FURNISH SAFETY INSTRUCTIONS AND GUIDANCE TO ALL PERSONNEL WHO MAY COME IN CONTACT WITH THE INSTALLATION, AND PROVIDE ALL NECESSARY ADDITIONAL SAFETY GUARDS, FENCES, RESTRAINTS, DEVICES, ETC., NOT FURNISHED BY THE EQUIPMENT MANUFACTURER OR VENDOR.

ATTENTION

THE FLOOR AND/OR OTHER SUPPORT COMPONENTS MUST HAVE SUFFICIENT STRENGTH (AND RIGIDITY WITH DUE CONSIDERATION FOR NATURAL OR RESONANT FREQUENCY THEREOF) TO WITHSTAND THE FULLY LOADED WEIGHT OF THE MACHINE INCLUDING THE GOODS, THE WATER, AND ANY REPEATED SINUSOIDAL (ROTATING) FORCES GENERATED DURING ITS OPERATION. WRITE THE FACTORY FOR ADDITIONAL MACHINE DATA FOR USE BY A COMPETENT SOIL AND/OR STRUCTURAL ENGINEER.

42032 CENTRIFUGAL DRAIN TROUGH

DM 0 0.5M 1M
INCHES 0 12 24 36

DWG# BDM7EDRNAE 95027D

PELLERIN MILNOR CORPORATION
P.O. Box 400 Kenner, LA 70063, USA. Phone 504/467-9591,
FAX 504/469-1849, Telex ITT 460124/PELM UI, Cable PELMILNOR

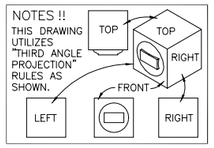

PLAN VIEW ON REVERSE SIDE OF DRAWING SHOWS AREA TO SLOPE, ALWAYS SLOPE TOWARD DRAIN TROUGH.

EXTRACTOR MUST BE GROUTED TO SOLID CONCRETE FLOOR. CENTRIFUGAL EXTRACTOR MUST BE KEPT LEVEL ON GROUT.

FOR LEFT DISCHARGE EXTRACTORS, WATER TANK IS ALWAYS ON RIGHT.

WATER TANK MUST BE KEPT LEVEL AT ALL TIMES.

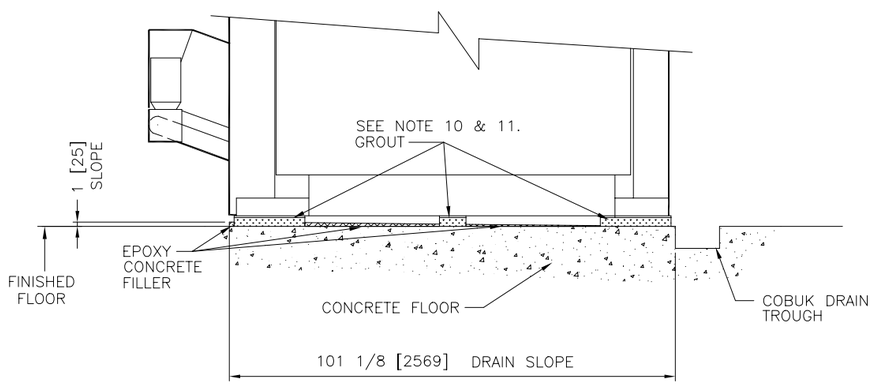

PARTIAL RIGHT VIEW
WHEN COBUK IS USED

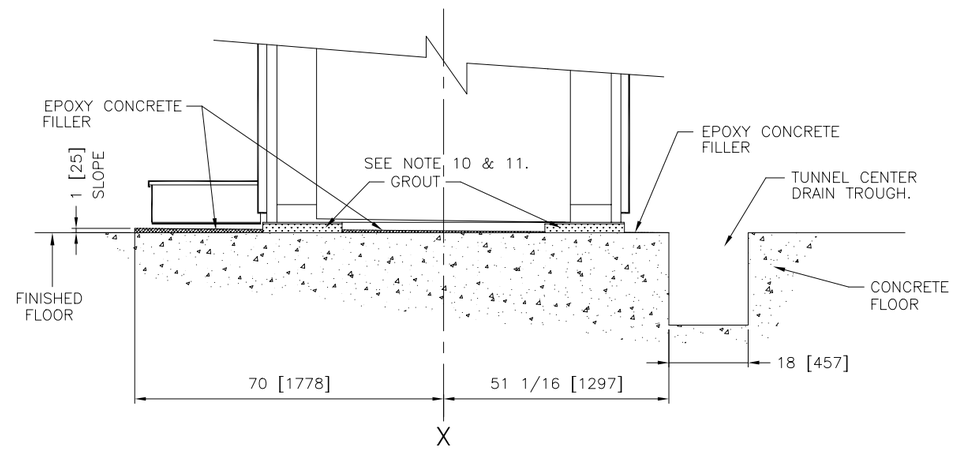

PARTIAL FRONT VIEW
TUNNEL DISCHARGES TO RIGHT/LEFT

FOR TUNNELS DISCHARGING LEFT REVERSE DIMENSIONS

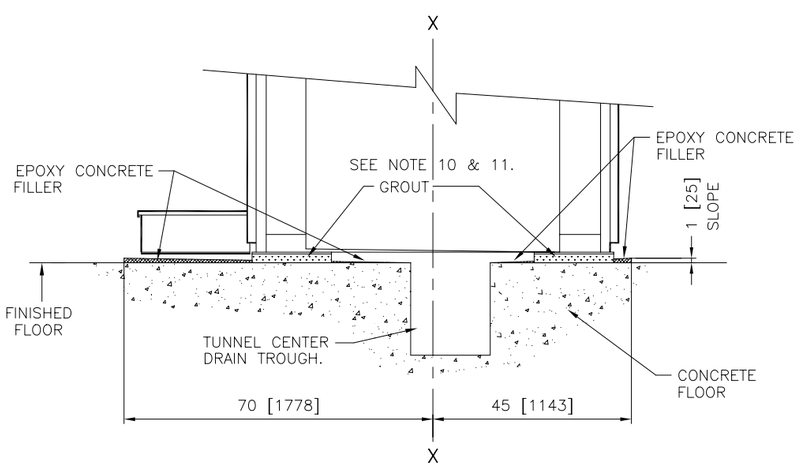

PARTIAL FRONT VIEW
TUNNEL WATER SIDE LEFT

SEE NOTE 12.

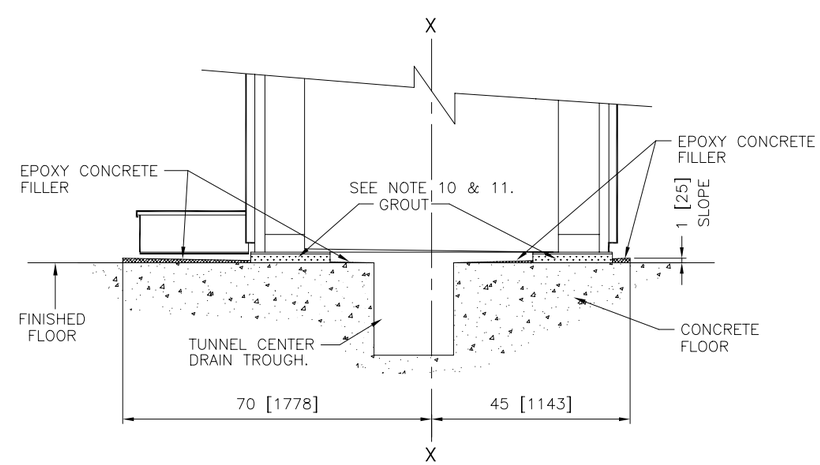

PARTIAL FRONT VIEW
TUNNEL WATER SIDE RIGHT

SEE NOTE 12.

NOTES

14 AREA UNDER EXTRACTOR IS SLOPED 1" [25] AND SLOPES TO TUNNEL DRAIN TROUGH OR COBUK DRAIN TROUGH.

13 WHEN COBUK UNLOADS TO MORE THAN ONE EXTRACTOR OR PRESS MAKE SURE COBUK DRAIN TROUGH RUNS LENGTH OF COBUK PATH.

12 TUNNEL CENTER DRAIN TROUGH IS WIDER ON WATER SIDE OF TUNNEL.

11 EXTRACTOR MUST BE GROUTED TO SOLID CONCRETE FLOOR.

10 CENTRIFUGAL EXTRACTOR MUST BE KEPT LEVEL ON GROUT.

9 WHEN THE CENTRIFUGAL EXTRACTOR MUST BE RAISED ON A PEDESTAL BASE, IT IS ALSO NECESSARY TO RAISE THE REUSE WATER TANK THE SAME HEIGHT AS THE EXTRACTOR WITH PROPER SUPPORT.

8 DO NOT PRE-PIPE ANY CLOSER THAN 60 [1524].

7 ANCHOR BOLTS MUST BE INSTALLED FOR ALL MOUNTING HOLES. 1 [25] THICK GROUT UNDER ALL BASE PADS SHOWN SHADED IN PLAN VIEW.

6 AS OF THIS WRITING, THE MINIMUM CLEARANCE REQUIRED BY U.S. NATIONAL ELECTRIC CODES, FROM ELECTRIC BOX TO ANY OBJECT IS:
36 [914] IF OBJECT IS AN UNGROUNDED (INSULATED) WALL.
42 [1067] IF OBJECT IS A GROUNDED WALL (ie. BARE CONCRETE, BRICK, ETC.)
48 [1219] IF OBJECT IS ANY LIVE PART.
CHECK LOCAL ELECTRIC CODES FOR FURTHER RESTRICTIONS.

5 CUSTOMER TO SUPPLY CIRCUIT BREAKER OR FUSED BRANCH CIRCUIT DISCONNECT (SAFETY) SWITCHES WITH LAG TYPE FUSES FROM POWER SOURCE TO MACHINE. A SEPARATE GROUND WIRE MUST BE CONNECTED FROM DISCONNECT TO EQUIPMENT.

4 BASELINE "Z" IS THE SAME FOR ALL MILNOR MACHINES AND IS SHOWN ON ALL DIMENSIONAL DRAWINGS. THE DISTANCE BETWEEN BASELINE "Z" AND THE FINISHED FLOOR MAY VARY (WITH CHANGES IN FLOOR HEIGHT) AS REQUIRED TO INSURE THAT BASELINE "Z" IS HORIZONTAL AND ALL COMPONENTS REQUIRING GROUT ARE SET ON A MINIMUM 1" [25] THICK GROUT BED.

3 USE REFERENCE LINES "X", "Y", AND "Z" TO LOCATE ALL SERVICE CONNECTIONS.

2 NUMBERS IN BRACKETS [] DENOTE DIMENSIONS IN MILLIMETERS.

1 ALL DIMENSIONS SHOWN ARE APPROXIMATE, SUBJECT TO NORMAL MANUFACTURING TOLERANCES, AND TO OCCASIONAL CHANGES WITHOUT NOTICE THROUGH REDESIGN AND/OR RELOCATION OF COMPONENTS, ETC. DO NOT USE FOR CONSTRUCTION UNLESS CERTIFIED, AND IN NO EVENT PRE-PIPE CLOSER THAN FIVE FEET FROM MACHINE. FACTORY MUST BE CONSULTED FOR DIMENSIONS IF MACHINE IS TO BE MOVED THROUGH NARROW OR LOW CORRIDORS OR OPENINGS.

ATTENTION

MOST REGULATORY AUTHORITIES (INCLUDING OSHA IN THE USA) HOLD THE OWNER/USER ULTIMATELY RESPONSIBLE TO MAINTAIN A SAFE WORKING ENVIRONMENT. ACCORDINGLY, THE OWNER/USER MUST RECOGNIZE ALL FORESEEABLE SAFETY HAZARDS, FURNISH SAFETY INSTRUCTIONS AND GUIDANCE TO ALL PERSONNEL WHO MAY COME IN CONTACT WITH THE INSTALLATION, AND PROVIDE ALL NECESSARY ADDITIONAL SAFETY GUARDS, FENCES, RESTRAINTS, DEVICES, ETC., NOT FURNISHED BY THE EQUIPMENT MANUFACTURER OR VENDOR.

ATTENTION

THE FLOOR AND/OR OTHER SUPPORT COMPONENTS MUST HAVE SUFFICIENT STRENGTH (AND RIGIDITY WITH DUE CONSIDERATION FOR NATURAL OR RESONANT FREQUENCY THEREOF) TO WITHSTAND THE FULLY LOADED WEIGHT OF THE MACHINE INCLUDING THE GOODS, THE WATER, AND ANY REPEATED SINUSOIDAL (ROTATING) FORCES GENERATED DURING ITS OPERATION. WRITE THE FACTORY FOR ADDITIONAL MACHINE DATA FOR USE BY A COMPETENT SOIL AND/OR STRUCTURAL ENGINEER.

42032 CENTRIFUGAL DRAIN TROUGH

DM 0 0.5M 1M
INCHES 0 12 24 36

DWG# BDM7EDRNAB 95027D

PELLERIN MILNOR CORPORATION
P.O. Box 400 Kenner, LA 70063, USA, Phone 504/467-9591,
FAX 504/469-1849, Telex ITT 460124/PELM UI, Cable PELMILNOR

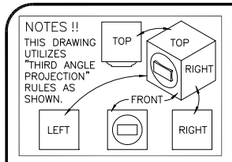

DIMENSIONS THAT VARY WITH:			DISCHARGE CONVEYOR:						
CBW	A			B		C STANDARD FOOT		C +7" FOOT	
	INCHES	mm		INCHES	mm	INCHES	mm	INCHES	mm
76028	8 3/4	222	0" EXTENSION	116 3/4	2968	25 3/4	653	32 3/4	830
76032	4 11/16	119	24" EXTENSION	138 1/2	3520	35 3/4	910	42 3/4	1088
76039	8 3/4	222	48" EXTENSION	160 1/4	4073	46	1168	53	1346

FOOT SPECIFIED:	D		E		F		G	
	INCHES	mm	INCHES	mm	INCHES	mm	INCHES	mm
STANDARD FOOT	60	1524	40–15/16	1040	37–13/16	961	128–13/16	3272
+7"(178) FOOT	67	1702	47–15/16	1218	44–13/16	1139	135–13/16	3450

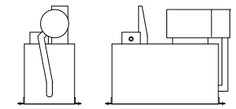

SIDE VIEWS: HYDRAULIC TANK

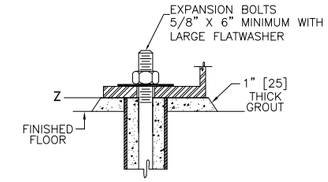

INSTALLATION DETAIL

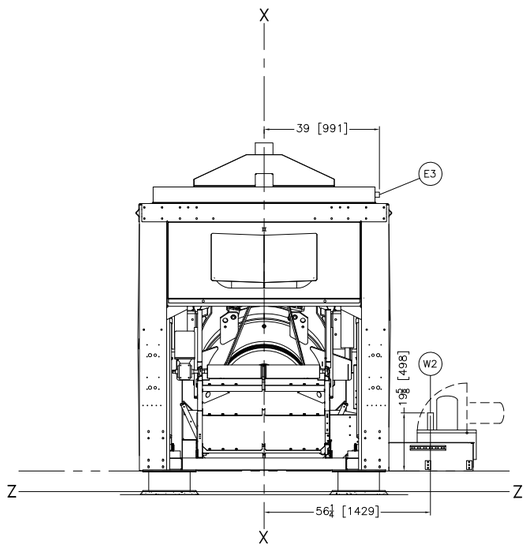

REAR VIEW

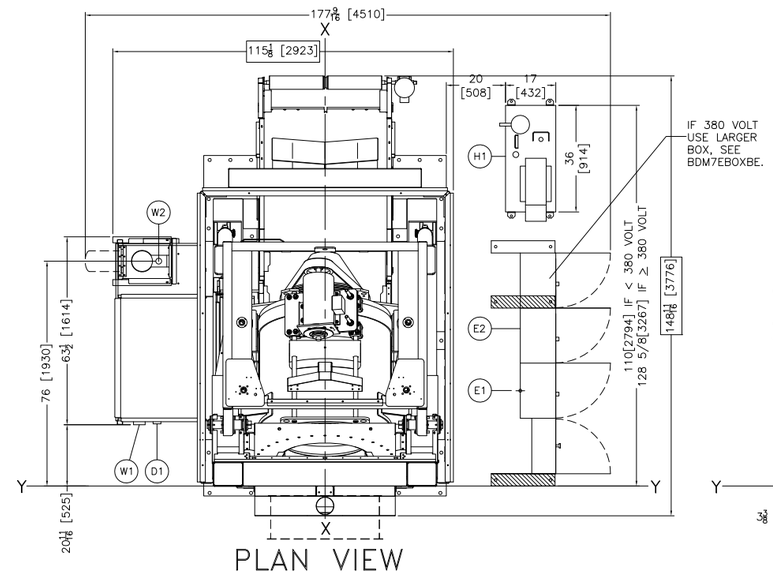

PLAN VIEW

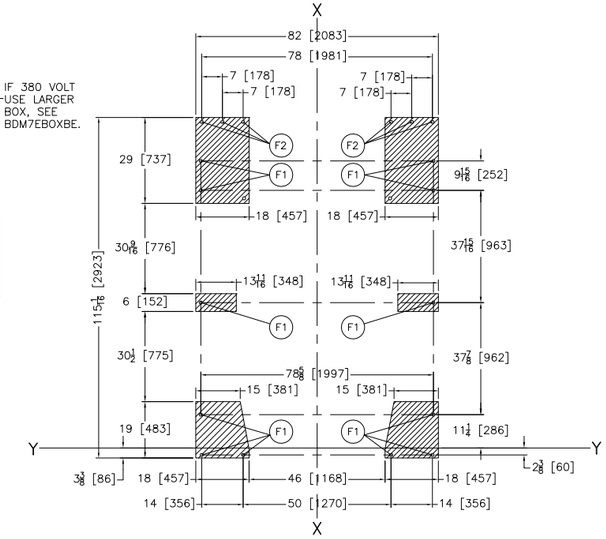

FOUNDATION PLAN VIEW

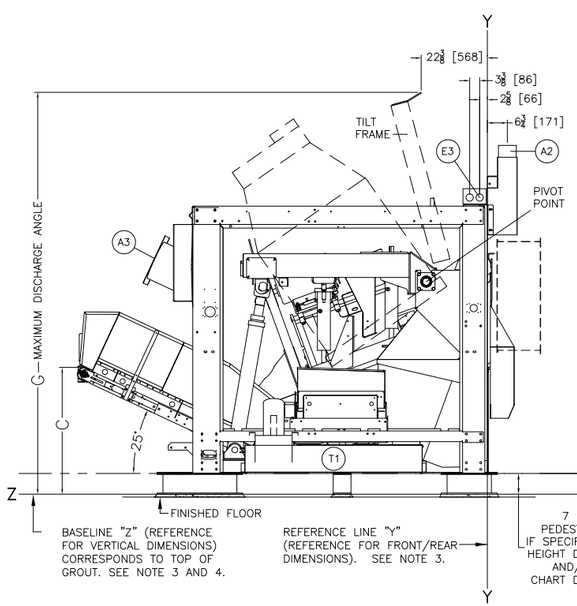

LEFT VIEW

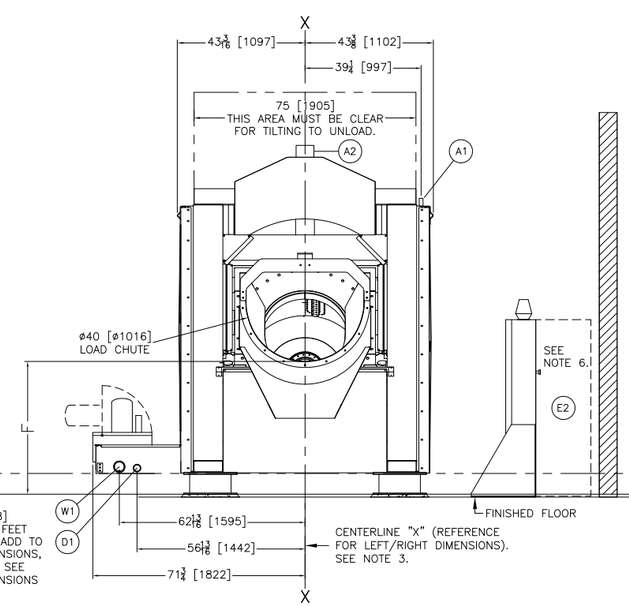

FRONT VIEW

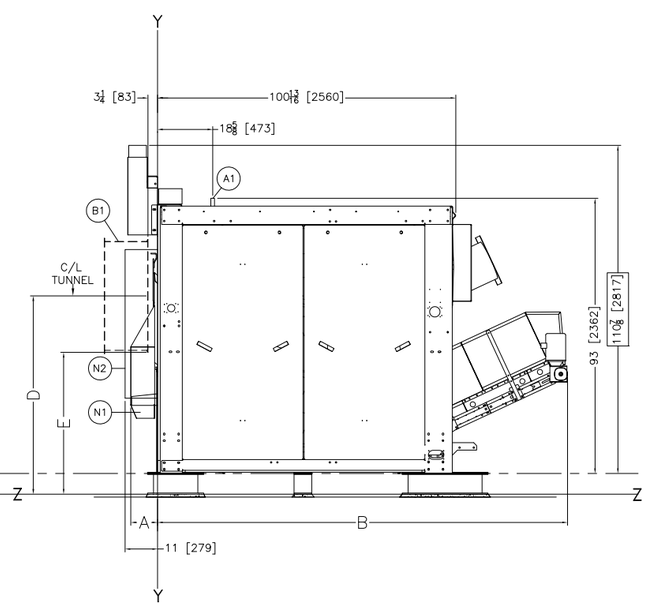

RIGHT VIEW

ITEM	LEGEND
W2	REUSE PUMP, WATER TO TUNNEL, 2" HOSE CONNECTION
W1	REUSE WATER FROM LAST MODULE OF TUNNEL, 3" NPT,
	PIPING SUPPLIED BY PMC.
T1	REUSE WATER TANK, MUST KEEP LEVEL AT ALL TIMES.
N2	LOAD CHUTE GUARD (NOT USED 76032)
N1	SCUPPER AND PAN ONLY USED WHEN DIRECTLY LOADED
	BY ANY MILNOR TUNNEL.
F2	SIX, 1–1/16"[27] DIA. HOLES FOR SHIPPING
F1	TWELVE, 1–1/16"[27] DIA. ANCHOR BOLT HOLES. USE 5/8"
	ANCHOR BOLTS MINIMUM.
H1	HYDRAULIC BOX (REQUIRES NO EXTERNAL CONNECTIONS).
E3	MAIN CABLE ENTRANCE COMING FROM CONTROL CONSOLE.
E2	CONTROLS, SEE BDM7EBOXBE.
E1	MAIN ELECTRIC SERVICE CONNECTION. REFER TO FACTORY
	FOR DETAIL OR WIRE SIZE AND FUSING REQUIREMENT.
D1	TANK MANUAL DRAIN 1–1/2" PVC TO SEWER
B1	TUNNEL DISCHARGE RING
A3	FAN
A2	HOOD VENT, 6"[152] DIAMETER, SEE NOTE 14.
A1	COMPRESSED AIR INLET, 1" NPT, FEMALE CONNECTION. RUN
	MINIMUM 1" PIPE. FOR LINES LONGER THAN 75 FEET [23
	METERS], RUN 1 1/4" PIPE. LOCATED ON SIDE OPPOSITE
	OF ELECTRICS.

NOTES

12 THE BEST PRACTICE IS TO PROVIDE TWO SEPARATE, POWERED VENTILATION UNITS THAT MEET THE FOLLOWING CONDITIONS:
A) THE TWO UNITS ARE ISOLATED FROM EACH OTHER TO AVOID HARMFUL CHEMICAL REACTIONS.
B) VENTILATION FANS HAVE SUFFICIENT POWER TO DRAW VAPORS AWAY FROM THE EQUIPMENT. MILNOR RECOMMENDS:
*500 SCFM PER CONNECTION POINT FOR THE OXIDATION ZONE
*750 SCFM PER CONNECTION POINT FOR THE FINISH ZONE AND PRESS ENCLOSURE.
C) FAN MOTORS SHOULD BE EQUIPPED WITH AN ALARM(EXAMPLE: INDICATOR LIGHT) TO ALERT PERSONNEL IF A MOTOR FAILS.

11 SHIM TO LEVEL THE MACHINE AND ALLOW FOR 1" [25] MINIMUM GROUT UNDER BASEPADS. ANCHOR ALL ANCHOR BOLT HOLES, USE 5/8" X 6" BOLTS, MINIMUM. SEE INSTALLATION MAINTENANCE MANUAL FOR FURTHER INSTRUCTIONS.

10 WHEN THE CENTRIFUGAL EXTRACTOR MUST BE RAISED ON A PEDESTAL BASE, IT IS ALSO NECESSARY TO RAISE THE REUSE WATER TANK THE SAME HEIGHT AS THE EXTRACTOR WITH PROPER SUPPORT.

9 EXTRACTOR WATER TANK AVAILABLE ONLY ON LEFT SIDE IF CENTER DISCHARGE.

8 DO NOT PRE–PIPE ANY CLOSER THAN 60 [1524].

7 ANCHOR BOLTS MUST BE INSTALLED FOR ALL MOUNTING HOLES. 1 [25] THICK GROUT UNDER ALL BASE PADS SHOWN SHADED IN PLAN VIEW.

6 AS OF THIS WRITING, THE MINIMUM CLEARANCE REQUIRED BY U.S. NATIONAL ELECTRIC CODES, FROM ELECTRIC BOX TO ANY OBJECT IS:
36 [914] IF OBJECT IS AN UNGROUNDED (INSULATED) WALL.
42 [1067] IF OBJECT IS A GROUNDED WALL (ie. BARE CONCRETE, BRICK, ETC.)
48 [1219] IF OBJECT IS ANY LIVE PART.
CHECK LOCAL ELECTRIC CODES FOR FURTHER RESTRICTIONS.

5 CUSTOMER TO SUPPLY CIRCUIT BREAKER OR FUSED BRANCH CIRCUIT DISCONNECT (SAFETY) SWITCHES WITH LAG TYPE FUSES FROM POWER SOURCE TO MACHINE. A SEPARATE GROUND WIRE MUST BE CONNECTED FROM DISCONNECT TO EQUIPMENT.

4 BASELINE "Z" IS THE REFERENCE FOR ALL VERTICAL DIMENSIONS. ON MACHINES WITH FIXED BASE PADS, BASELINE "Z" CORRESPONDS TO THE BOTTOM OF THE BASE PAD. ON MACHINES WITH ADJUSTABLE FEET, BASELINE "Z" CORRESPONDS TO THE BOTTOM OF THE FEET WHEN ADJUSTED SO THAT THE MACHINE IS AT ITS MINIMUM ACCEPTABLE HEIGHT. ON TRAVERSING SHUTTLES, BASELINE "Z" CORRESPONDS TO THE BOTTOM OF THE BOTTOM RAIL. THE DISTANCE BETWEEN BASELINE "Z" AND THE FINISHED FLOOR WILL VARY AS REQUIRED TO ENSURE BASELINE "Z" IS HORIZONTAL AND ANY INTERFACING MACHINES REQUIRING GROUT ARE SET ON A MINIMUM 1"[25] THICK GROUT BED.

3 USE REFERENCE LINES "X", "Y", AND "Z" TO LOCATE ALL SERVICE CONNECTIONS.

2 NUMBERS IN BRACKETS [] DENOTE DIMENSIONS IN MILLIMETERS.

1 ALL DIMENSIONS SHOWN ARE APPROXIMATE, SUBJECT TO NORMAL MANUFACTURING TOLERANCES, AND TO OCCASIONAL CHANGES WITHOUT NOTICE THROUGH REDESIGN AND/OR RELOCATION OF COMPONENTS, ETC. DO NOT USE FOR CONSTRUCTION UNLESS CERTIFIED, AND IN NO EVENT PRE–PIPE CLOSER THAN FIVE FEET FROM MACHINE. FACTORY MUST BE CONSULTED FOR DIMENSIONS IF MACHINE IS TO BE MOVED THROUGH NARROW OR LOW CORRIDORS OR OPENINGS.

ATTENTION

MOST REGULATORY AUTHORITIES (INCLUDING OSHA IN THE USA) HOLD THE OWNER/USER ULTIMATELY RESPONSIBLE TO MAINTAIN A SAFE WORKING ENVIRONMENT. ACCORDINGLY, THE OWNER/USER MUST RECOGNIZE ALL FORESEEABLE SAFETY HAZARDS, FURNISH SAFETY INSTRUCTIONS AND GUIDANCE TO ALL PERSONNEL WHO MAY COME IN CONTACT WITH THE INSTALLATION, AND PROVIDE ALL NECESSARY ADDITIONAL SAFETY GUARDS, FENCES, RESTRAINTS, DEVICES, ETC., NOT FURNISHED BY THE EQUIPMENT MANUFACTURER OR VENDOR.

ATTENTION

THE FLOOR AND/OR OTHER SUPPORT COMPONENTS MUST HAVE SUFFICIENT STRENGTH (AND RIGIDITY WITH DUE CONSIDERATION FOR NATURAL OR RESONANT FREQUENCY THEREOF) TO WITHSTAND THE FULLY LOADED WEIGHT OF THE MACHINE INCLUDING THE GOODS, THE WATER, AND ANY REPEATED SINUSOIDAL (ROTATING) FORCES GENERATED DURING ITS OPERATION. WRITE THE FACTORY FOR ADDITIONAL MACHINE DATA FOR USE BY A COMPETENT SOIL AND/OR STRUCTURAL ENGINEER.

MXT4232C, MMT4232C

DM 0 0.5M 1M
INCHES 0 12 24 36

DWG# BDMXT4232CAE 2016205D

PELLERIN MILNOR CORPORATION
P.O. Box 400 Kenner, LA 70063, USA, Phone 504/467–9591,
FAX 504/468–3094, Email: milnorinfo@milnor.com

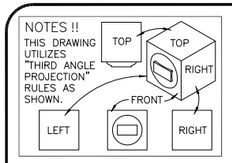

DIMENSIONS THAT VARY WITH:			DISCHARGE CONVEYOR:						
CBW	A			B		C STANDARD FOOT		C +7" FOOT	
	INCHES	mm		INCHES	mm	INCHES	mm	INCHES	mm
76028	8 3/4	222	0" EXTENSION	62 1/2	1588	26 1/4	667	33 1/4	845
76032	4 11/16	119	24" EXTENSION	84 1/4	2140	36 3/8	924	43 3/8	1102
76039	8 3/4	222	48" EXTENSION	106	2692	46 9/16	1182	53 9/16	1360

FOOT SPECIFIED:	D		E		F		G	
	INCHES	mm	INCHES	mm	INCHES	mm	INCHES	mm
STANDARD FOOT	60	1524	40–15/16	1040	37–13/16	961	128–13/16	3272
+7"(178) FOOT	67	1702	47–15/16	1218	44–13/16	1139	135–13/16	3450

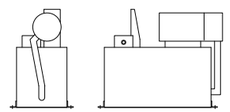

SIDE VIEWS: HYDRAULIC TANK

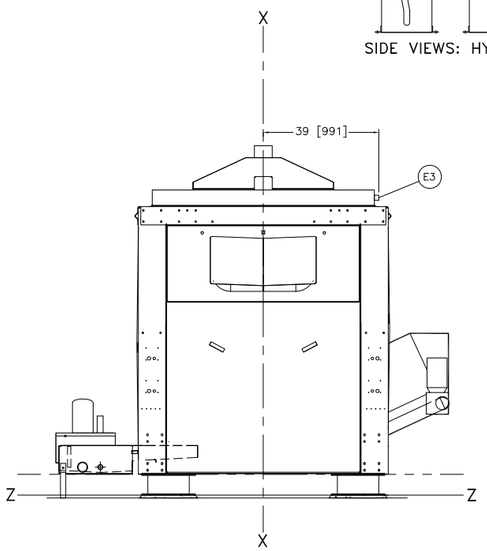

REAR VIEW

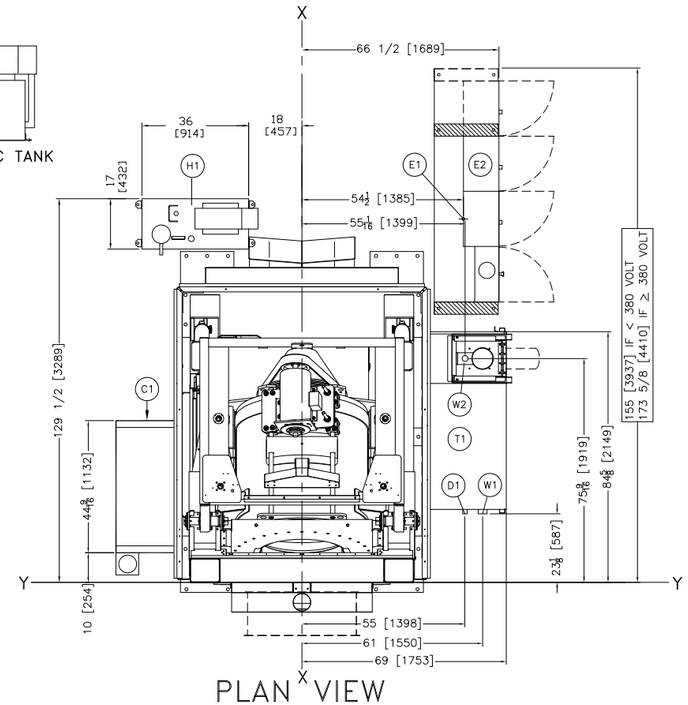

PLAN VIEW

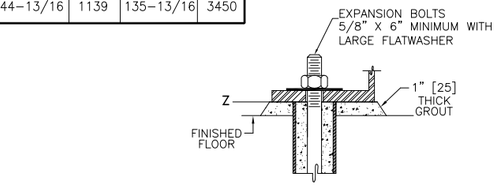

INSTALLATION DETAIL

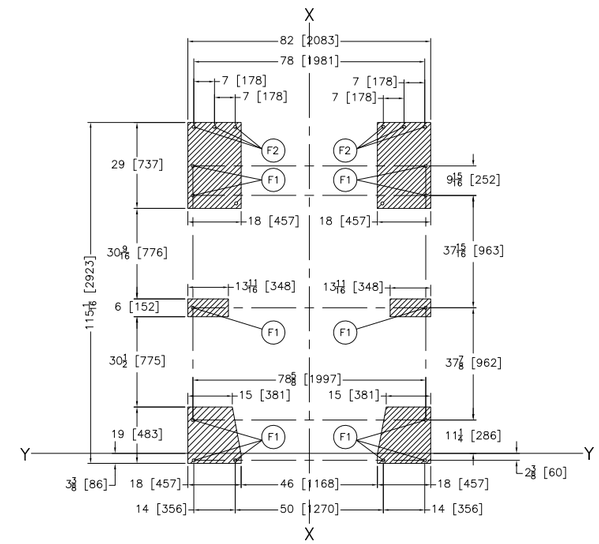

FOUNDATION PLAN VIEW

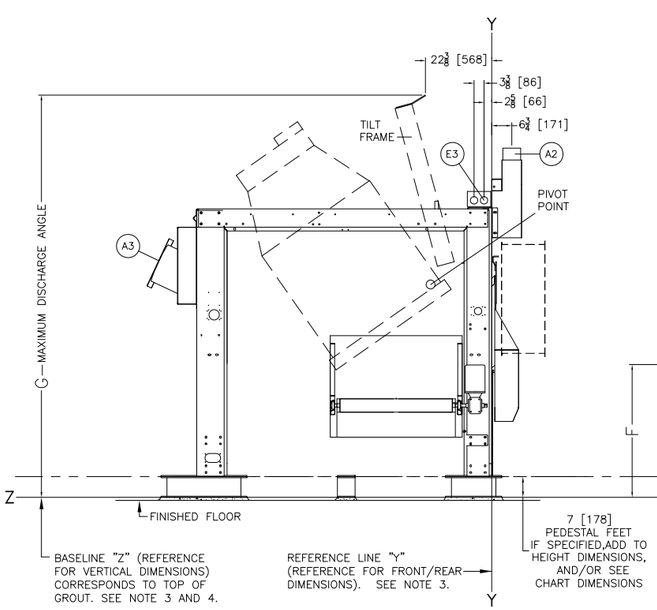

LEFT VIEW

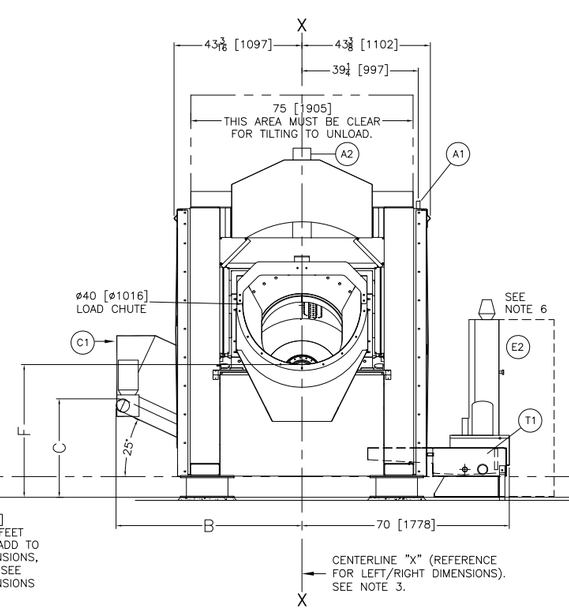

FRONT VIEW

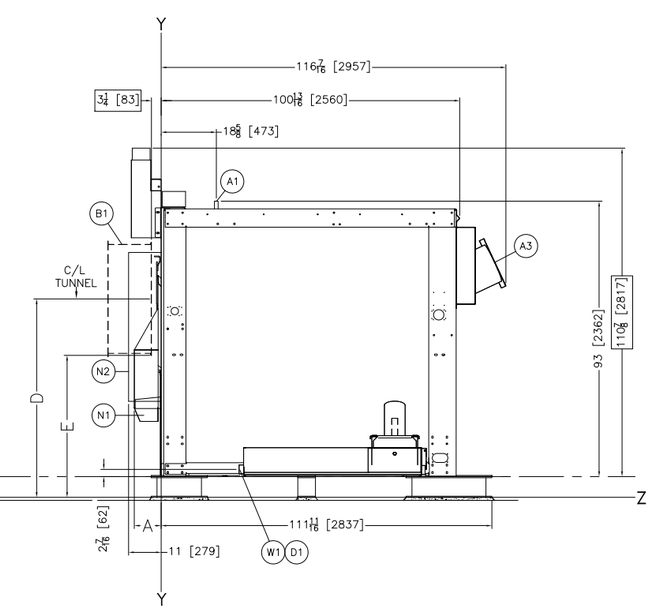

RIGHT VIEW

ITEM	LEGEND
W2	REUSE PUMP, WATER TO TUNNEL, 2" HOSE CONNECTION
W1	REUSE WATER FROM LAST MODULE OF TUNNEL, 3" NPT,
	PIPING SUPPLIED BY PMC.
T1	REUSE WATER TANK, MUST KEEP LEVEL AT ALL TIMES.
N2	LOAD CHUTE GUARD (NOT USED 76032)
N1	SCUPPER AND PAN ONLY USED WHEN DIRECTLY LOADED
	BY ANY MILNOR TUNNEL.
F2	SIX, 1–1/16"[27] DIA. HOLES FOR SHIPPING
F1	TWELVE, 1–1/16"[27] DIA. ANCHOR BOLT HOLES. USE 5/8"
	ANCHOR BOLTS MINIMUM.
H1	HYDRAULIC BOX (REQUIRES NO EXTERNAL CONNECTIONS).
E3	MAIN CABLE ENTRANCE COMING FROM CONTROL CONSOLE.
E2	CONTROLS, SEE BDM7EBOXBE.
E1	MAIN ELECTRIC SERVICE CONNECTION. REFER TO FACTORY
	FOR DETAIL OR WIRE SIZE AND FUSING REQUIREMENT.
D1	TANK MANUAL DRAIN 1–1/2" PVC TO SEWER
B1	TUNNEL DISCHARGE RING
A3	FAN
A2	HOOD VENT, 6"[152] DIAMETER, SEE NOTE 14.
A1	COMPRESSED AIR INLET, 1" NPT, FEMALE CONNECTION. RUN
	MINIMUM 1" PIPE. FOR LINES LONGER THAN 75 FEET [23
	METERS], RUN 1 1/4" PIPE. LOCATED ON SIDE OPPOSITE
	OF ELECTRICS.

NOTES

12 THE BEST PRACTICE IS TO PROVIDE TWO SEPARATE, POWERED VENTILATION UNITS THAT MEET THE FOLLOWING CONDITIONS:
A) THE TWO UNITS ARE ISOLATED FROM EACH OTHER TO AVOID HARMFUL CHEMICAL REACTIONS.
B) VENTILATION FANS HAVE SUFFICIENT POWER TO DRAW VAPORS AWAY FROM THE EQUIPMENT. MILNOR RECOMMENDS:
*500 SCFM PER CONNECTION POINT FOR THE OXIDATION ZONE
*750 SCFM PER CONNECTION POINT FOR THE FINISH ZONE AND PRESS ENCLOSURE.
C) FAN MOTORS SHOULD BE EQUIPPED WITH AN ALARM(EXAMPLE: INDICATOR LIGHT) TO ALERT PERSONNEL IF A MOTOR FAILS.

11 SHIM TO LEVEL THE MACHINE AND ALLOW FOR 1" [25] MINIMUM GROUT UNDER BASEPADS. ANCHOR ALL ANCHOR BOLT HOLES, USE 5/8" X 6" BOLTS, MINIMUM. SEE INSTALLATION MAINTENANCE MANUAL FOR FURTHER INSTRUCTIONS.

10 WHEN THE CENTRIFUGAL EXTRACTOR MUST BE RAISED ON A PEDESTAL BASE, IT IS ALSO NECESSARY TO RAISE THE REUSE WATER TANK THE SAME HEIGHT AS THE EXTRACTOR WITH PROPER SUPPORT.

9 EXTRACTOR WATER TANK AVAILABLE ONLY ON LEFT SIDE IF CENTER DISCHARGE.

8 DO NOT PRE–PIPE ANY CLOSER THAN 60 [1524].

7 ANCHOR BOLTS MUST BE INSTALLED FOR ALL MOUNTING HOLES. 1 [25] THICK GROUT UNDER ALL BASE PADS SHOWN SHADED IN PLAN VIEW.

6 AS OF THIS WRITING, THE MINIMUM CLEARANCE REQUIRED BY U.S. NATIONAL ELECTRIC CODES, FROM ELECTRIC BOX TO ANY OBJECT IS:
36 [914] IF OBJECT IS AN UNGROUNDED (INSULATED) WALL.
42 [1067] IF OBJECT IS A GROUNDED WALL (ie. BARE CONCRETE, BRICK, ETC.)
48 [1219] IF OBJECT IS ANY LIVE PART.
CHECK LOCAL ELECTRIC CODES FOR FURTHER RESTRICTIONS.

5 CUSTOMER TO SUPPLY CIRCUIT BREAKER OR FUSED BRANCH CIRCUIT DISCONNECT (SAFETY) SWITCHES WITH LAG TYPE FUSES FROM POWER SOURCE TO MACHINE. A SEPARATE GROUND WIRE MUST BE CONNECTED FROM DISCONNECT TO EQUIPMENT.

4 BASELINE "Z" IS THE REFERENCE FOR ALL VERTICAL DIMENSIONS. ON MACHINES WITH FIXED BASE PADS, BASELINE "Z" CORRESPONDS TO THE BOTTOM OF THE BASE PAD. ON MACHINES WITH ADJUSTABLE FEET, BASELINE "Z" CORRESPONDS TO THE BOTTOM OF THE FEET WHEN ADJUSTED SO THAT THE MACHINE IS AT ITS MINIMUM ACCEPTABLE HEIGHT. ON TRAVERSING SHUTTLES, BASELINE "Z" CORRESPONDS TO THE BOTTOM OF THE BOTTOM RAIL. THE DISTANCE BETWEEN BASELINE "Z" AND THE FINISHED FLOOR WILL VARY AS REQUIRED TO ENSURE BASELINE "Z" IS HORIZONTAL AND ANY INTERFACING MACHINES REQUIRING GROUT ARE SET ON A MINIMUM 1"[25] THICK GROUT BED.

3 USE REFERENCE LINES "X", "Y", AND "Z" TO LOCATE ALL SERVICE CONNECTIONS.

2 NUMBERS IN BRACKETS [] DENOTE DIMENSIONS IN MILLIMETERS.

1 ALL DIMENSIONS SHOWN ARE APPROXIMATE, SUBJECT TO NORMAL MANUFACTURING TOLERANCES, AND TO OCCASIONAL CHANGES WITHOUT NOTICE THROUGH REDESIGN AND/OR RELOCATION OF COMPONENTS, ETC. DO NOT USE FOR CONSTRUCTION UNLESS CERTIFIED, AND IN NO EVENT PRE–PIPE CLOSER THAN FIVE FEET FROM MACHINE. FACTORY MUST BE CONSULTED FOR DIMENSIONS IF MACHINE IS TO BE MOVED THROUGH NARROW OR LOW CORRIDORS OR OPENINGS.

ATTENTION

MOST REGULATORY AUTHORITIES (INCLUDING OSHA IN THE USA) HOLD THE OWNER/USER ULTIMATELY RESPONSIBLE TO MAINTAIN A SAFE WORKING ENVIRONMENT. ACCORDINGLY, THE OWNER/USER MUST RECOGNIZE ALL FORESEEABLE SAFETY HAZARDS, FURNISH SAFETY INSTRUCTIONS AND GUIDANCE TO ALL PERSONNEL WHO MAY COME IN CONTACT WITH THE INSTALLATION, AND PROVIDE ALL NECESSARY ADDITIONAL SAFETY GUARDS, FENCES, RESTRAINTS, DEVICES, ETC., NOT FURNISHED BY THE EQUIPMENT MANUFACTURER OR VENDOR.

ATTENTION

THE FLOOR AND/OR OTHER SUPPORT COMPONENTS MUST HAVE SUFFICIENT STRENGTH (AND RIGIDITY WITH DUE CONSIDERATION FOR NATURAL OR RESONANT FREQUENCY THEREOF) TO WITHSTAND THE FULLY LOADED WEIGHT OF THE MACHINE INCLUDING THE GOODS, THE WATER, AND ANY REPEATED SINUSOIDAL (ROTATING) FORCES GENERATED DURING ITS OPERATION. WRITE THE FACTORY FOR ADDITIONAL MACHINE DATA FOR USE BY A COMPETENT SOIL AND/OR STRUCTURAL ENGINEER.

MXT4232L, MMT4232L

DM 0 0.5M 1M
INCHES 0 12 24 36

DWG# BDMXT4232LAE
2016205D

PELLERIN MILNOR CORPORATION
P.O. Box 400 Kenner, LA 70063, USA, Phone 504/467–9591,
FAX 504/468–3094, Email: milnorinfo@milnor.com

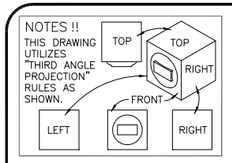

DIMENSIONS THAT VARY WITH:			DISCHARGE CONVEYOR:						
CBW	A			B		C STANDARD FOOT		C +7" FOOT	
	INCHES	mm		INCHES	mm	INCHES	mm	INCHES	mm
76028	8 3/4	222	0" EXTENSION	62 1/2	1588	26 1/4	667	33 1/4	845
76032	4 11/16	119	24" EXTENSION	84 1/4	2140	36 3/8	924	43 3/8	1102
76039	8 3/4	222	48" EXTENSION	106	2692	46 9/16	1182	53 9/16	1360

FOOT SPECIFIED:	D		E		F		G	
	INCHES	mm	INCHES	mm	INCHES	mm	INCHES	mm
STANDARD FOOT	60	1524	40-15/16	1040	37-13/16	961	128-13/16	3272
+7"(178) FOOT	67	1702	47-15/16	1218	44-13/16	1139	135-13/16	3450

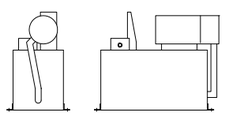

SIDE VIEWS: HYDRAULIC TANK

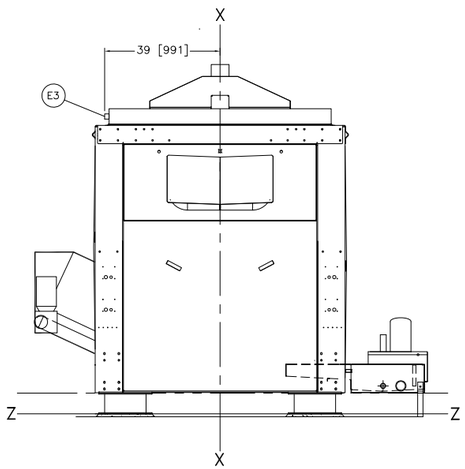

REAR VIEW

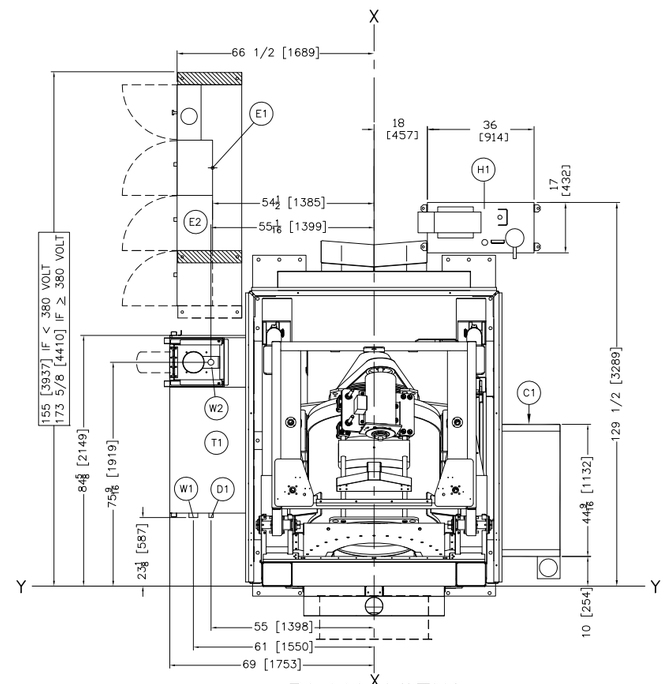

PLAN VIEW

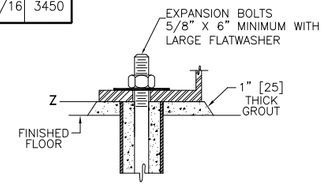

INSTALLATION DETAIL

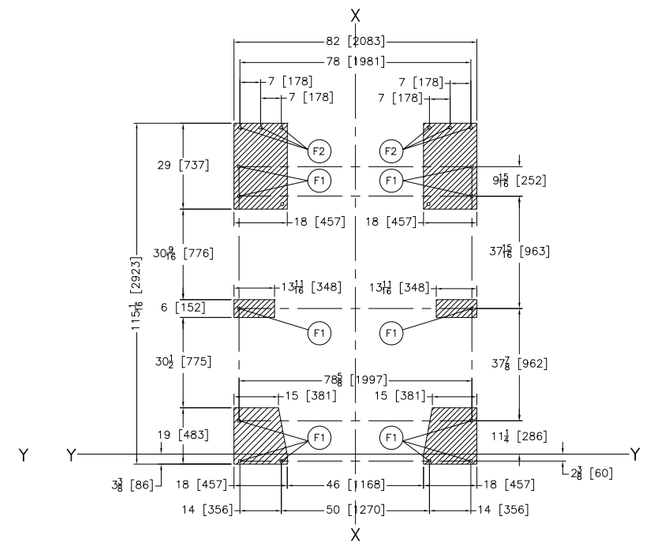

FOUNDATION PLAN VIEW

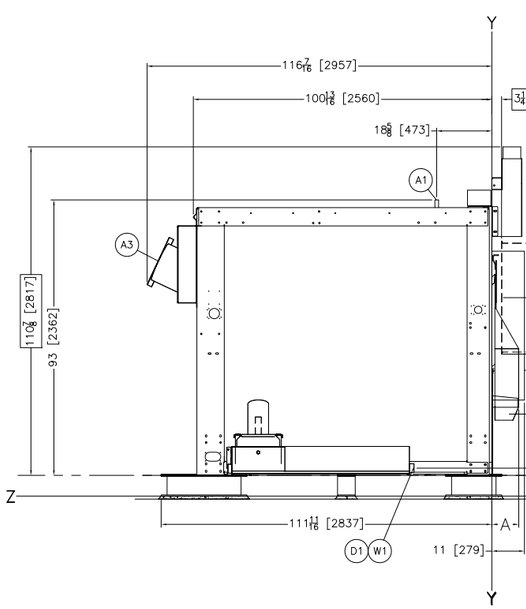

LEFT VIEW

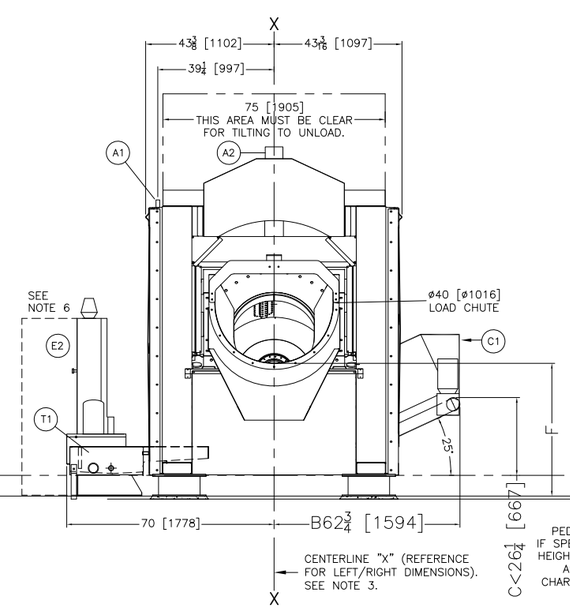

CENTERLINE "X" (REFERENCE FOR LEFT/RIGHT DIMENSIONS). SEE NOTE 3.

7 [178] PEDESTAL FEET IF SPECIFIED,ADD TO HEIGHT DIMENSIONS, AND/OR SEE CHART DIMENSIONS

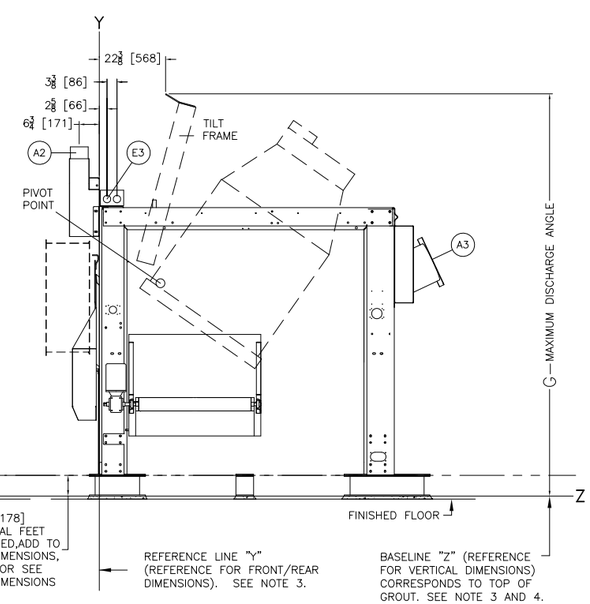

REFERENCE LINE "Y" (REFERENCE FOR FRONT/REAR DIMENSIONS). SEE NOTE 3.

BASELINE "Z" (REFERENCE FOR VERTICAL DIMENSIONS) CORRESPONDS TO TOP OF GROUT. SEE NOTE 3 AND 4.

FRONT VIEW

RIGHT VIEW

ITEM	LEGEND
W2	REUSE PUMP, WATER TO TUNNEL, 2" HOSE CONNECTION
W1	REUSE WATER FROM LAST MODULE OF TUNNEL, 3" NPT,
	PIPING SUPPLIED BY PMC.
T1	REUSE WATER TANK, MUST KEEP LEVEL AT ALL TIMES.
N2	LOAD CHUTE GUARD (NOT USED 76032)
N1	SCUPPER AND PAN ONLY USED WHEN DIRECTLY LOADED
	BY ANY MILNOR TUNNEL.
F2	SIX, 1-1/16"[27] DIA. HOLES FOR SHIPPING
F1	TWELVE, 1-1/16"[27] DIA. ANCHOR BOLT HOLES. USE 5/8"
	ANCHOR BOLTS MINIMUM.
H1	HYDRAULIC BOX (REQUIRES NO EXTERNAL CONNECTIONS).
E3	MAIN CABLE ENTRANCE COMING FROM CONTROL CONSOLE.
E2	CONTROLS, SEE BDM7EBOXBE.
E1	MAIN ELECTRIC SERVICE CONNECTION. REFER TO FACTORY
	FOR DETAIL OR WIRE SIZE AND FUSING REQUIREMENT.
D1	TANK MANUAL DRAIN 1-1/2" PVC TO SEWER
B1	TUNNEL DISCHARGE RING
A3	FAN
A2	HOOD VENT, 6"[152] DIAMETER, SEE NOTE 14.
A1	COMPRESSED AIR INLET, 1" NPT, FEMALE CONNECTION. RUN
	MINIMUM 1" PIPE. FOR LINES LONGER THAN 75 FEET [23
	METERS], RUN 1 1/4" PIPE. LOCATED ON SIDE OPPOSITE
	OF ELECTRICS.

NOTES

12 THE BEST PRACTICE IS TO PROVIDE TWO SEPARATE, POWERED VENTILATION UNITS THAT MEET THE FOLLOWING CONDITIONS:
A) THE TWO UNITS ARE ISOLATED FROM EACH OTHER TO AVOID HARMFUL CHEMICAL REACTIONS.
B) VENTILATION FANS HAVE SUFFICIENT POWER TO DRAW VAPORS AWAY FROM THE EQUIPMENT. MILNOR RECOMMENDS:
*500 SCFM PER CONNECTION POINT FOR THE OXIDATION ZONE
*750 SCFM PER CONNECTION POINT FOR THE FINISH ZONE AND PRESS ENCLOSURE.
C) FAN MOTORS SHOULD BE EQUIPPED WITH AN ALARM(EXAMPLE: INDICATOR LIGHT) TO ALERT PERSONNEL IF A MOTOR FAILS.

11 SHIM TO LEVEL THE MACHINE AND ALLOW FOR 1" [25] MINIMUM GROUT UNDER BASEPADS. ANCHOR ALL ANCHOR BOLT HOLES, USE 5/8" X 6" BOLTS, MINIMUM. SEE INSTALLATION MAINTENANCE MANUAL FOR FURTHER INSTRUCTIONS.

10 WHEN THE CENTRIFUGAL EXTRACTOR MUST BE RAISED ON A PEDESTAL BASE, IT IS ALSO NECESSARY TO RAISE THE REUSE WATER TANK THE SAME HEIGHT AS THE EXTRACTOR WITH PROPER SUPPORT.

9 EXTRACTOR WATER TANK AVAILABLE ONLY ON LEFT SIDE IF CENTER DISCHARGE.

8 DO NOT PRE-PIPE ANY CLOSER THAN 60 [1524].

7 ANCHOR BOLTS MUST BE INSTALLED FOR ALL MOUNTING HOLES. 1 [25] THICK GROUT UNDER ALL BASE PADS SHOWN SHADED IN PLAN VIEW.

6 AS OF THIS WRITING, THE MINIMUM CLEARANCE REQUIRED BY U.S. NATIONAL ELECTRIC CODES, FROM ELECTRIC BOX TO ANY OBJECT IS:
36 [914] IF OBJECT IS AN UNGROUNDED (INSULATED) WALL.
42 [1067] IF OBJECT IS A GROUNDED WALL (ie. BARE CONCRETE, BRICK, ETC.)
48 [1219] IF OBJECT IS ANY LIVE PART.
CHECK LOCAL ELECTRIC CODES FOR FURTHER RESTRICTIONS.

5 CUSTOMER TO SUPPLY CIRCUIT BREAKER OR FUSED BRANCH CIRCUIT DISCONNECT (SAFETY) SWITCHES WITH LAG TYPE FUSES FROM POWER SOURCE TO MACHINE. A SEPARATE GROUND WIRE MUST BE CONNECTED FROM DISCONNECT TO EQUIPMENT.

4 BASELINE "Z" IS THE REFERENCE FOR ALL VERTICAL DIMENSIONS. ON MACHINES WITH FIXED BASE PADS, BASELINE "Z" CORRESPONDS TO THE BOTTOM OF THE BASE PAD. ON MACHINES WITH ADJUSTABLE FEET, BASELINE "Z" CORRESPONDS TO THE BOTTOM OF THE FEET WHEN ADJUSTED SO THAT THE MACHINE IS AT ITS MINIMUM ACCEPTABLE HEIGHT. ON TRAVERSING SHUTTLES, BASELINE "Z" CORRESPONDS TO THE BOTTOM OF THE BOTTOM RAIL. THE DISTANCE BETWEEN BASELINE "Z" AND THE FINISHED FLOOR WILL VARY AS REQUIRED TO ENSURE BASELINE "Z" IS HORIZONTAL AND ANY INTERFACING MACHINES REQUIRING GROUT ARE SET ON A MINIMUM 1"[25] THICK GROUT BED.

3 USE REFERENCE LINES "X", "Y", AND "Z" TO LOCATE ALL SERVICE CONNECTIONS.

2 NUMBERS IN BRACKETS [] DENOTE DIMENSIONS IN MILLIMETERS.

1 ALL DIMENSIONS SHOWN ARE APPROXIMATE, SUBJECT TO NORMAL MANUFACTURING TOLERANCES, AND TO OCCASIONAL CHANGES WITHOUT NOTICE THROUGH REDESIGN AND/OR RELOCATION OF COMPONENTS, ETC. DO NOT USE FOR CONSTRUCTION UNLESS CERTIFIED, AND IN NO EVENT PRE-PIPE CLOSER THAN FIVE FEET FROM MACHINE. FACTORY MUST BE CONSULTED FOR DIMENSIONS IF MACHINE IS TO BE MOVED THROUGH NARROW OR LOW CORRIDORS OR OPENINGS.

ATTENTION

MOST REGULATORY AUTHORITIES (INCLUDING OSHA IN THE USA) HOLD THE OWNER/USER ULTIMATELY RESPONSIBLE TO MAINTAIN A SAFE WORKING ENVIRONMENT. ACCORDINGLY, THE OWNER/USER MUST RECOGNIZE ALL FORESEEABLE SAFETY HAZARDS, FURNISH SAFETY INSTRUCTIONS AND GUIDANCE TO ALL PERSONNEL WHO MAY COME IN CONTACT WITH THE INSTALLATION, AND PROVIDE ALL NECESSARY ADDITIONAL SAFETY GUARDS, FENCES, RESTRAINTS, DEVICES, ETC., NOT FURNISHED BY THE EQUIPMENT MANUFACTURER OR VENDOR.

ATTENTION

THE FLOOR AND/OR OTHER SUPPORT COMPONENTS MUST HAVE SUFFICIENT STRENGTH (AND RIGIDITY WITH DUE CONSIDERATION FOR NATURAL OR RESONANT FREQUENCY THEREOF) TO WITHSTAND THE FULLY LOADED WEIGHT OF THE MACHINE INCLUDING THE GOODS, THE WATER, AND ANY REPEATED SINUSOIDAL (ROTATING) FORCES GENERATED DURING ITS OPERATION. WRITE THE FACTORY FOR ADDITIONAL MACHINE DATA FOR USE BY A COMPETENT SOIL AND/OR STRUCTURAL ENGINEER.

MXT4232R, MMT4232R

DM 0 0.5M 1M
INCHES 0 12 24 36

DWG# BDMXT4232RAE
2016205D

PELLERIN MILNOR CORPORATION
P.O. Box 400 Kenner, LA 70063, USA, Phone 504/467-9591,
FAX 504/468-3094, Email: milnorinfo@milnor.com