**Published Manual Number/ECN: ME6HSR2ZAE/2025174A**
- **Publishing System: TPAS2**
- **Access date: 04/24/2025**
- **Document ECNs: Latest**

# Schematic/Electrical Parts

## 42044, 60044 & 72044

## SR2, SR3

**Read the separate safety manual before installing, operating, or servicing**

**PELLERIN MILNOR CORPORATION** POST OFFICE BOX 400, KENNER, LOUISIANA 70063-0400, U.S.A.

# Table of Contents
# ME6HSR2ZAE/25174A


| Page | Description | Document |
|---|---|---|
| 1 | Component Parts List | W6W5SZPL/2025174N |
| 11 | Limited Standard Warranty | BMP720097/2025142 |
| 12 | How to Get the Necessary Repair Components | BIUUUD19/20081231 |
| 13 | How to Use Milnor® Electrical Schematic Diagrams | BIUUUK01/20130308 |
| 26 | Sample Schematic | BMP010012/2018343 |
| 28 | 3 Phase Motor Connection Diagram | BMP850029/1999362B |
| 29 | 3P Motor Diagram-Multivolt | W80008/2001253A |
| 30 | Control Box Layouts Sheet 1 | W6W5SZTG1/2018364B |
| 32 | Control Box Layouts Sheet 2 | W6W5SZTG2/2019094B |
| 34 | Control Box Layouts Sheet 3 | W6W5SZTG3/2018364B |
| 36 | Control Box Layouts Sheet 4 | W6W5SZTG4/2019174B |
| 38 | Autospot Clean Side 72044 only | W6W5SZACA/2022475B |
| 40 | Autospot Circuit | W6W5SZAS/2024414B |
| 42 | Autospot Circuit 72044 only | W6W5SZASA/2022475B |
| 44 | Board to Board Wiring | W6W5SZBW/2021045B |
| 46 | Flushing Supplies | W6W5SZCF/2024214B |
| 48 | Liquid Chemical Supplies, Interpret Relays | W6W5SZCP/2014152B |
| 50 | Clean /Soil Side Controls | W6W5SZCS/2025174B |
| 52 | Clean / Soil Side Controls 72044 only | W6W5SZCSA/2025174B |
| 54 | Liquid Supplies Option | W6W5SZCX/2016374B |
| 56 | Door Circuits | W6W5SZD/2025174B |
| 58 | Door Circuit72044 only | W6W5SZDA/2025174B |
| 60 | Electric Valves | W6W5SZEV/2024145B |
| 62 | Electric Valves 72044 only | W6W5SZEVA/2020532B |
| 64 | Optional LED Signal Light | W6W5SZFS/2020214B |
| 66 | Microprocessor Inputs | W6W5SZI1/2025174B |
| 68 | Drive Motor Contactors 72044 only | W6W5SZMCA/2023104B |
| 70 | 600V Wiring 42044, 60044 only | W6W5SZMT6/2019454B |
| 72 | Motor Connections 72044 only | W6W5SZMTA/2014152B |
| 74 | 20 Programable Outputs | W6W5SZOP/2014152B |
| 76 | Control Circuit Transformers | W6W5SZPS/2019394B |
| 78 | Start Circuit | W6W5SZS+/2025174B |
| 80 | Start Circuit 72044 only | W6W5SZS+A/2025174B |
| 82 | Master Switch Circuit | W6W5SZSP/2014152B |
| 84 | Master Switch Circuit 72044 only | W6W5SZSPA/2022475B |
| 86 | Inverter Wiring-42044WRS2/3 | W6W5SZVP/2024502B |
| 88 | Inverter Wiring-60044WRS2/3 | W6W5SZVPA/2024502B |

# COMPONENT PARTS LIST

W6W5SZPL/2025174N

| COMPONENT NUMBER | FUNCTION OF THIS COMPONENT | WHERE TO FIND THIS COMPONENT | MILNOR P/N | DESCRIPTION | LOCATION |
|---|---|---|---|---|---|
| | **>>CONTROL BOX LAYOUTS** | | | | |
| 001 | CONTROL BOARDS INPUTS/OUTPUTS | W6W5SZTG1 | B2T2014009 | WR2/3,SR2/3 CONTROL BOARDS | LOW VOLT BOX |
| 002 | POWER SUPPLY SETTINGS | W6W5SZTG1 | B2T2014012 | TAG: MILTOUCH-EX POWER SUPY SET | LOW VOLT BOX |
| 003 | 42044 LOW VOLTAGE CONTROL BOX | W6W5SZTG2 | B2T2014010 | TAG 42044SR2 LOW VOLT BOX | LOW VOLT BOX |
| 004 | 42044 HIGH VOLTAGE CONTROL BOX | W6W5SZTG2 | B2T2015008 | TAG:4244WR2/SR2 SINGLE MTR HV BOX | HIGH VOLT BOX |
| 005 | 60044 HIGH VOLTAGE CONTROL BOX | W6W5SZTG3 | B2T2014018 | 60044WR2/3,SR2/3 HIGH VOLTAGE BOX | HIGH VOLT BOX |
| 006 | 60044 INVERTER CONTROL BOX | W6W5SZTG3 | B2T2014017 | 60044WR2/3,SR2/3 INVERTER C-BOX | INVERTER BOX |
| 007 | 6044 LOW VOLTAGE CONTROL BOX | W6W5SZTG3 | B2T2014024 | 60044SR2/3 LOW VOLTAGE C-BOX | LOW VOLT BOX |
| 008 | 72044 LOW VOLTAGE CONTROL BOX | W6W5SZTG4 | B2T2015006 | 7244SR2/3 MILTOUCH-EX LOW VOLT C-BOX | LOW VOLT BOX |
| 009 | 72044 HIGH VOLTAGE CONTROL BOX | W6W5SZTG4 | B2T2007020 | 7244WR2/3 MILTOUCH-EX HIGH VOLT C-BOX | HIGH VOLT BOX |
| BA | **>>PRINTED CIRCUIT BOARDS** | | | | |
| BAD-1 | BOARD-ANALOG TO DIGITAL CONVERTER | W6W5SZBW | 08BSADCT | BD:SERIAL A-D CONVERT->TEST | LOW VOLT BOX |
| BDA-1 | BOARD-DIGITAL TO ANALOG CONVERTOR | W6W5SZBW | 08BSDACT | BD:SERIAL D-A CONVERTR->TEST | LOW VOLT BOX |
| BIO-1 | BOARD-8OUTPUT/16INPUT #1 | W6W5SZBW | 08BS816CHT | BD 8OUT-16IN HIGH SPD->TESTD | LOW VOLT BOX |
| BIO-2 | BOARD-8OUTPUT/16INPUT #2 | W6W5SZBW | 08BS816CHT | BD 8OUT-16IN HIGH SPD->TESTD | LOW VOLT BOX |
| BIO-A | BOARD-8OUTPUT/16INPUT #A (AUTOSPOT) | W6W5SZBW | 08BS816CTA | SERIAL 8OUT-16INPUT-AUTOSPOT | LOW VOLT BOX |
| BLB | BOARD-LEVEL BOARD TRANSDUCER | W6W5SZBW | 08BNLTT | LEVEL TRANSDUCER BD->TEST | LOW VOLT BOX |
| BO24-1 | BOARD-24 OUTPUT #1 | W6W5SZBW | 08BSO24AT | BD:SERIAL 24 OUTPUT->TEST | LOW VOLT BOX |
| BO24-2 | BOARD-24 OUTPUT #2 | W6W5SZBW | 08BSO24AT | BD:SERIAL 24 OUTPUT->TEST | LOW VOLT BOX |
| BO24-3 | BOARD-24 OUTPUT #3 | W6W5SZBW | 08BSO24AT | BD:SERIAL 24 OUTPUT->TEST | LOW VOLT BOX |
| BPB | BOARD-ARM9 PROCESSOR+TOUCH SCREEN | W6W5SZBW | 08BHA9D4T | ASSY:ARM9 PROC+8.4 OPTREX DSP-TESTED | SWITCH PANEL |
| BSP | BOARD-SPEED SENSING | W6W5SZVP | 08BNDSRBT | BD:SAFETY ROTATION SG 1MR-TEST | LOW VOLT BOX |
| CB | **>>CIRCUIT BREAKERS** | | | | |
| CB1 | CIRCUIT BREAKER-WASH/DRAIN MOTOR | W6W5SZMTA | 09FC032CAA | IEC MINI CIR.BREAK 32A 480V3P | HIGH VOLT BX |
| CB2 | CIRCUIT BREAKER-AUTOSPOT MOTOR | W6W5SZMTA | 09FC016CAA | IEC MINI CIR.BREAK 16A 480V3P | HIGH VOLT BX |
| CD | **>>RELAY-DELAY** | | | | |
| CDEXN | DELAY-EXTRACT HAS ENDED <2-7-2019 | W6W5SZSPA | 09CF007537 | TDR F7.5S 2PDT 11PIN 120V60C | LOW VOLT BOX |
| CDEXN | DELAY-EXTRACT HAS ENDED >2-7-2019 | W6W5SZSPA | 09CA100A37 | ADJUSTABLE TIME DELAY 10S OMRON 100-12 | LOW VOLT BOX |
| CDS+N | DELAY-DOOR SEAL <2-7-2019 | W6W5SZS+A | 09CF007537 | TDR F7.5S 2PDT 11PIN 120V60C | LOW VOLT BOX |
| CDS+N | DELAY-DOOR SEAL >2-7-2019 | W6W5SZS+A | 09CA100A37 | ADJUSTABLE TIME DELAY 10S OMRON 100-12 | LOW VOLT BOX |
| CDVS | DELAY-ENABLE JOG <2-7-2019 | W6W5SZS+ | 09CF002037 | TDR F2S 2PDT 11PIN 120V60/50C | LOW VOLT BOX |
| CDVS | DELAY-ENABLE JOG >2-7-2019 | W6W5SZS+ | 09CA100A37 | ADJUSTABLE TIME DELAY 10S OMRON 100-12 | LOW VOLT BOX |
| CL | **>>RELAY-LATCH** | | | | |

# COMPONENT PARTS LIST



| COMPONENT NUMBER | FUNCTION OF THIS COMPONENT | WHERE TO FIND THIS COMPONENT | MILNOR P/N | DESCRIPTION | LOCATION |
|---|---|---|---|---|---|
| CLDCC | LATCH-CLEAN SIDE DOOR (SET)<3/2015 | W6W5SZD | 09CL2C-C37 | RELAY-LATCH DPDT 120V 2-COIL | LOW VOLT BOX |
| CLDCC | LATCH-CLEAN SIDE DOOR (SET)>3/2015 | W6W5SZD | 09CL2C-D37 | RELAY-LATCH DPDT 120V 2-COIL ICECUBE | LOW VOLT BOX |
| CLDCC | LATCH-CLEAN SIDE DOOR<3/2025 | W6W5SZDA | 09CL2C-C37 | RELAY-LATCH DPDT 120V 2-COIL | LOW VOLT BOX |
| CLDCC | LATCH-CLEAN SIDE DOOR>3/2025 | W6W5SZDA | 09CL2C-D37 | RELAY-LATCH DPDT 120V 2-COIL ICECUBE | LOW VOLT BOX |
| CLDCC | LATCH-CLEAN SIDE DOOR (RESET)<3-2025 | W6W5SZS+ | 09CL2C-C37 | RELAY-LATCH DPDT 120V 2-COIL | LOW VOLT BOX |
| CLDCC | LATCH-CLEAN SIDE DOOR (RESET)>3-2025 | W6W5SZS+ | 09CL2C-D37 | RELAY-LATCH DPDT 120V 2-COIL ICECUBE | LOW VOLT BOX |
| CLDCD | LATCH-CLEAN SIDE DOOR (SET)<3-2025 | W6W5SZD | 09CL2C-C37 | RELAY-LATCH DPDT 120V 2-COIL | LOW VOLT BOX |
| CLDCD | LATCH-CLEAN SIDE DOOR (SET)>3-2025 | W6W5SZD | 09CL2C-D37 | RELAY-LATCH DPDT 120V 2-COIL ICECUBE | LOW VOLT BOX |
| CLDCD | LATCH-CLEAN SIDE DOOR<3/2025 | W6W5SZDA | 09CL2C-C37 | RELAY-LATCH DPDT 120V 2-COIL | LOW VOLT BOX |
| CLDCD | LATCH-CLEAN SIDE DOOR>3/2025 | W6W5SZDA | 09CL2C-D37 | RELAY-LATCH DPDT 120V 2-COIL ICECUBE | LOW VOLT BOX |
| CLDCD | LATCH-CLEAN SIDE DOOR (RESET)<3/2025 | W6W5SZS+ | 09CL2C-C37 | RELAY-LATCH DPDT 120V 2-COIL | LOW VOLT BOX |
| CLDCD | LATCH-CLEAN SIDE DOOR (RESET)>3/2025 | W6W5SZS+ | 09CL2C-D37 | RELAY-LATCH DPDT 120V 2-COIL ICECUBE | LOW VOLT BOX |
| CLPCC | LATCH-TRANSFER TO CLEAN SIDE (SET)<3/2025 | W6W5SZCS | 09CL2C-C37 | RELAY-LATCH DPDT 120V 2-COIL | LOW VOLT BOX |
| CLPCC | LATCH-TRANSFER TO CLEAN SIDE (SET)>3/2025 | W6W5SZCS | 09CL2C-D37 | RELAY-LATCH DPDT 120V 2-COIL ICECUBE | LOW VOLT BOX |
| CLPCC | LATCH-TRANSFORMER TO CLEAN SIDE<3/2025 | W6W5SZCSA | 09CL2C-C37 | RELAY-LATCH DPDT 120V 2-COIL | LOW VOLT BOX |
| CLPCC | LATCH-TRANSFORMER TO CLEAN SIDE<3/2025 | W6W5SZCSA | 09CL2C-D37 | RELAY-LATCH DPDT 120V 2-COIL ICECUBE | LOW VOLT BOX |
| CLPCC | LATCH-TRANSFER TO CLEAN SIDE (RESET)<3/2025 | W6W5SZCS | 09CL2C-C37 | RELAY-LATCH DPDT 120V 2-COIL | LOW VOLT BOX |
| CLPCC | LATCH-TRANSFER TO CLEAN SIDE (RESET)>3/2025 | W6W5SZCS | 09CL2C-D37 | RELAY-LATCH DPDT 120V 2-COIL ICECUBE | LOW VOLT BOX |
| CR | **>>RELAY-PILOT OR CONTROL** | | | | |
| CRAC | RELAY-SPOT OR JOG CLEAN SIDE | W6W5SZD | 09C024D37 | 4PDT MINITURE RELAY PT W/LED | LOW VOLT BOX |
| CRAD | RELAY-SPOT OR JOG CLEAN SIDE | W6W5SZD | 09C024D37 | 4PDT MINITURE RELAY PT W/LED | LOW VOLT BOX |
| CRADC | RELAY-COAST ON MILTOUCH POWER UP | W6W5SZVP | 09C024D37 | 4PDT MINITURE RELAY PT W/LED | LOW VOLT BOX |
| CRADC | RELAY-COAST ON MILTOUCH POWER UP | W6W5SZVPA | 09C024D37 | 4PDT MINITURE RELAY PT W/LED | LOW VOLT BOX |
| CRAS | RELAY-DOOR LATCH SOIL SIDE | W6W5SZD | 09C024D37 | 4PDT MINITURE RELAY PT W/LED | LOW VOLT BOX |
| CRASA | RELAY-AUTOSPOT ENABLED | W6W5SZASA | 09C024D37 | 4PDT MINITURE RELAY PT W/LED | LOW VOLT BOX |
| CRASB | RELAY-ENABLE RECOGNIZE SLOW | W6W5SZASA | 09C024D37 | 4PDT MINITURE RELAY PT W/LED | LOW VOLT BOX |
| CRASI | RELAY-AUTOSPOT DESIRED | W6W5SZASA | 09C024D37 | 4PDT MINITURE RELAY PT W/LED | LOW VOLT BOX |
| CRASJ | RELAY-INCH NOT AUTOSPOT | W6W5SZASA | 09C024D37 | 4PDT MINITURE RELAY PT W/LED | LOW VOLT BOX |
| CRASK | RELAY-AUTOSPOT JOG DESIRED | W6W5SZASA | 09C024D37 | 4PDT MINITURE RELAY PT W/LED | LOW VOLT BOX |
| CRASL | RELAY-AUTOSPOT RECOGNIZE SLOW | W6W5SZASA | 09C024D37 | 4PDT MINITURE RELAY PT W/LED | LOW VOLT BOX |
| CRASM | RELAY-AUTOSPOT RECOGNIZE SLOW | W6W5SZASA | 09C024D37 | 4PDT MINITURE RELAY PT W/LED | LOW VOLT BOX |
| CRASS | RELAY-AUTOSPOT STOP | W6W5SZASA | 09C024D37 | 4PDT MINITURE RELAY PT W/LED | LOW VOLT BOX |
| CRAST | RELAY-AUTOSPOT STOP | W6W5SZASA | 09C024D37 | 4PDT MINITURE RELAY PT W/LED | LOW VOLT BOX |

# COMPONENT PARTS LIST



| COMPONENT NUMBER | FUNCTION OF THIS COMPONENT | WHERE TO FIND THIS COMPONENT | MILNOR P/N | DESCRIPTION | LOCATION |
|---|---|---|---|---|---|
| CRAT | RELAY-DOOR LATCH SOIL SIDE | W6W5SZD | 09C024D37 | 4PDT MINITURE RELAY PT W/LED | LOW VOLT BOX |
| CRC01 | RELAY-CHEM INTERPERT #1 | W6W5SZCP | 09C024D37 | 4PDT MINITURE RELAY PT W/LED | INT RELAY BX |
| CRC02 | RELAY-CHEM INTERPERT #2 | W6W5SZCP | 09C024D37 | 4PDT MINITURE RELAY PT W/LED | INT RELAY BX |
| CRC03 | RELAY-CHEM INTERPERT #3 | W6W5SZCP | 09C024D37 | 4PDT MINITURE RELAY PT W/LED | INT RELAY BX |
| CRC04 | RELAY-CHEM INTERPERT #4 | W6W5SZCP | 09C024D37 | 4PDT MINITURE RELAY PT W/LED | INT RELAY BX |
| CRC05 | RELAY-CHEM INTERPERT #5 | W6W5SZCP | 09C024D37 | 4PDT MINITURE RELAY PT W/LED | INT RELAY BX |
| CRC06 | RELAY-CHEM INTERPERT #6 | W6W5SZCP | 09C024D37 | 4PDT MINITURE RELAY PT W/LED | INT RELAY BX |
| CRC07 | RELAY-CHEM INTERPERT #7 | W6W5SZCP | 09C024D37 | 4PDT MINITURE RELAY PT W/LED | INT RELAY BX |
| CRC08 | RELAY-CHEM INTERPERT #8 | W6W5SZCP | 09C024D37 | 4PDT MINITURE RELAY PT W/LED | INT RELAY BX |
| CRC09 | RELAY-CHEM INTERPERT #9 | W6W5SZCP | 09C024D37 | 4PDT MINITURE RELAY PT W/LED | INT RELAY BX |
| CRC10 | RELAY-CHEM INTERPERT #10 | W6W5SZCP | 09C024D37 | 4PDT MINITURE RELAY PT W/LED | INT RELAY BX |
| CRC11 | RELAY-CHEM INTERPERT #11 | W6W5SZCP | 09C024D37 | 4PDT MINITURE RELAY PT W/LED | INT RELAY BX |
| CRC12 | RELAY-CHEM INTERPERT #12 | W6W5SZCP | 09C024D37 | 4PDT MINITURE RELAY PT W/LED | INT RELAY BX |
| CRC13 | RELAY-CHEM INTERPERT #13 | W6W5SZCP | 09C024D37 | 4PDT MINITURE RELAY PT W/LED | INT RELAY BX |
| CRC14 | RELAY-CHEM INTERPERT #14 | W6W5SZCP | 09C024D37 | 4PDT MINITURE RELAY PT W/LED | INT RELAY BX |
| CRC15 | RELAY-CHEM INTERPERT #15 | W6W5SZCP | 09C024D37 | 4PDT MINITURE RELAY PT W/LED | INT RELAY BX |
| CRCCR | RELAY-TRANSFER TO SOIL SIDE | W6W5SZCS | 09C024D37 | 4PDT MINITURE RELAY PT W/LED | LOW VOLT BOX |
| CRCCR | RELAY-TRANSFER TO SOIL SIDE | W6W5SZCSA | 09C024D37 | 4PDT MINITURE RELAY PT W/LED | LOW VOLT BOX |
| CRCSG | RELAY-FLASHING LIGHT CONTROL CLEAN SIDE | W6W5SZCS | 09C024D37 | 4PDT MINITURE RELAY PT W/LED | LOW VOLT BOX |
| CRPCC | RELAY-CLEAN SIDE HAS CONTROL | W6W5SZCS | 09C024D37 | 4PDT MINITURE RELAY PT W/LED | LOW VOLT BOX |
| CRPCC | RELAY-CLEAN SIDE HAS CONTROL | W6W5SZCSA | 09C024D37 | 4PDT MINITURE RELAY PT W/LED | LOW VOLT BOX |
| CRPCD | RELAY-CLEAN SIDE HAS CONTROL | W6W5SZCSA | 09C024D37 | 4PDT MINITURE RELAY PT W/LED | LOW VOLT BOX |
| CRPCO | RELAY-OPEN CLEAN SIDE DOOR | W6W5SZD | 09C024D37 | 4PDT MINITURE RELAY PT W/LED | LOW VOLT BOX |
| CRPLA | RELAY-SOIL AND CLEAN SIDE DOORS CLOSED | W6W5SZD | 09C024D37 | 4PDT MINITURE RELAY PT W/LED | LOW VOLT BOX |
| CRPLA | RELAY-DOOR LATCHED ON CLEAN SIDE | W6W5SZSPA | 09C024D37 | 4PDT MINITURE RELAY PT W/LED | LOW VOLT BOX |
| CRPLC | RELAY-DOOR LATCH CLEAN SIDE | W6W5SZD | 09C024D37 | 4PDT MINITURE RELAY PT W/LED | LOW VOLT BOX |
| CRPLC | RELAY-DOOR LATCH CLEAN SIDE | W6W5SZDA | 09C024D37 | 4PDT MINITURE RELAY PT W/LED | LOW VOLT BOX |
| CRPLS | RELAY-SPOT OR JOG SOIL SIDE | W6W5SZD | 09C024D37 | 4PDT MINITURE RELAY PT W/LED | LOW VOLT BOX |
| CRPLS | RELAY-DOOR LATCH CLEAN SIDE | W6W5SZDA | 09C024D37 | 4PDT MINITURE RELAY PT W/LED | LOW VOLT BOX |
| CRS+ | RELAY-START 3-WIRE | W6W5SZS+ | 09C024D37 | 4PDT MINITURE RELAY PT W/LED | LOW VOLT BOX |
| CRS+ | RELAY-START 3-WIRE | W6W5SZS+A | 09C024D37 | 4PDT MINITURE RELAY PT W/LED | LOW VOLT BOX |
| CRS+A | RELAY-START 3-WIRE | W6W5SZS+ | 09C024D37 | 4PDT MINITURE RELAY PT W/LED | LOW VOLT BOX |
| CRS+S | RELAY-START 3-WIRE | W6W5SZS+A | 09C024D37 | 4PDT MINITURE RELAY PT W/LED | LOW VOLT BOX |

# COMPONENT PARTS LIST



| COMPONENT NUMBER | FUNCTION OF THIS COMPONENT | WHERE TO FIND THIS COMPONENT | MILNOR P/N | DESCRIPTION | LOCATION |
|---|---|---|---|---|---|
| CRSG | RELAY-SIGNAL SOIL SIDE | W6W5SZS+ | 09C024D37 | 4PDT MINITURE RELAY PT W/LED | LOW VOLT BOX |
| CRSOC | RELAY-STOP CLEAN SIDE | W6W5SZDA | 96R301B37 | 1/8"AIRPILOT 3W NC 120V50/60 | LOW VOLT BOX |
| CRSOE | RELAY-STOP CLEAN SIDE | W6W5SZDA | 96R301B37 | 1/8"AIRPILOT 3W NC 120V50/60 | LOW VOLT BOX |
| CRSOS | RELAY-STOP SOIL SIDE | W6W5SZDA | 96R301B37 | 1/8"AIRPILOT 3W NC 120V50/60 | LOW VOLT BOX |
| CRSOT | RELAY-STOP SOIL SIDE | W6W5SZDA | 96R301B37 | 1/8"AIRPILOT 3W NC 120V50/60 | LOW VOLT BOX |
| CRSP | RELAY-SPEED | W6W5SZSPA | 09C024D37 | 4PDT MINITURE RELAY PT W/LED | LOW VOLT BOX |
| CRSS | RELAY-START SOIL SIDE | W6W5SZS+A | 09C024D37 | 4PDT "KH" 110/120V | LOW VOLT BOX |
| CS | **>>CONTACTOR-MOTOR STARTER** | | | | |
| CSDR | CONTACTOR-DRAIN MOTOR | W6W5SZMCA | 09MC04E337 | 32A 3P CONT.NR 120V5/6 IEC | HIGH VOLT BX |
| CSE1 | CONTACTOR-LOW EXTRACT MOTOR | W6W5SZMCA | 09MC04L337 | 60A 3P CONT.NR 120V5/6 IEC | HIGH VOLT BX |
| CSE2 | CONTACTOR-HI EXTRACT MOTOR | W6W5SZMCA | 09MC04L337 | 60A 3P CONT.NR 120V5/6 IEC | HIGH VOLT BX |
| CSJC | CONTACTOR-AUTOSPOT CLOCKWISE | W6W5SZMCA | 09MR04B337 | 12A 3P REV+2N/C 120V5/6 IEC | HIGH VOLT BX |
| CSVS | CONTACTOR-VARIABLE SPEED 42044 | W6W5SZS+ | 09M08G337 | 37A 3P MCS CONT NR 120V5/6 | HIGH VOLT BX |
| CSVS | CONTACTOR-VARIABLE SPEED 60044 | W6W5SZS+ | 09M08N337 | 72A 3P MCS CONT NR 120V5/6 | HIGH VOLT BX |
| CSWA | CONTACTOR-REVERSING WASH CCW | W6W5SZMCA | 09MR04J337 | 44A 3P CONT.NR 120V5/6 IEC | HIGH VOLT BX |
| CSWC | CONTACTOR-REVERSING WASH CW | W6W5SZMCA | 09MR04J337 | 44A 3P CONT.NR 120V5/6 IEC | HIGH VOLT BX |
| EB | **>>BUZZER OR AUDIBLE SIGNAL** | | | | |
| EBPCC | BUZZER-CLEAN SIDE SIGNAL | W6W5SZD | 09H015 | BUZZER 115V W/6-32 CRT+6" LEADS | CLEAN SWPNL |
| EBPCC | BUZZER-CLEAN SIDE SIGNAL AUDIBLE | W6W5SZDA | 09H015 | BUZZER 115V W/6-32 CRT+6" LEADS | CLN SIDESWPL |
| EBSG | BUZZER-SIGNAL SOIL SIDE | W6W5SZS+ | 09H015 | BUZZER 115V W/6-32 CRT+6" LEADS | SOIL SWPNL |
| EBSG | BUZZER-SIGNAL SOIL SIDE | W6W5SZS+A | 09H015 | BUZZER 115V W/6-32 CRT+6" LEADS | SOIL SWPNL |
| EF | **>>FLASHING LIGHT** | | | | |
| EFLEDC | FLASHING LIGHT-SOIL SIGNAL | W6W5SZFS | 09H025V12 | BEACON ROTARY AMBER LED 12VDC | SOIL SWPNL |
| EFLEDS | FLASHING LIGHT-CLEAN SIGNAL | W6W5SZFS | 09H025V12 | BEACON ROTARY AMBER LED 12VDC | CLEAN SWPNL |
| EF | **>>FUSE OR FUSE HOLDER** | | | | |
| EF | **>>FUSE OR FUSE HOLDER** | | | | |
| EF16Y | FUSE-AUTOSPOT CLUTCH Y-BUS | W6W5SZMCA | 09FF002AMG | FUSE BK/MDX 2 AMP 250V BUSS | HIGH VOLT BX |
| EF37 | FUSE-120VAC CONTROL CIRCUIT | W6W5SZPS | 09FF006AMA | FUSE BK/ABC 6 AMP 250V BUSS | HIGH VOLT BX |
| EFP1 | FUSE-PRIMARY INCOMING VOLTAGE LOW VOLT | W6W5SZPS | 09FF006AWV | FUSE BUSS STYLE CC TYPE FNQ-R 6 AMP 60 | HIGH VOLT BX |
| EFP1 | FUSE-PRIMARY INCOMING VOLTAGE HI VOLT | W6W5SZPS | 09FF003AWV | FUSE BUSS STYLE CC TYPE FNQ-R 3 AMP 600 | HIGH VOLT BX |
| EFP2 | FUSE-PRIMARY INCOMING VOLTAGE LOW VOLT | W6W5SZPS | 09FF006AWV | FUSE BUSS STYLE CC TYPE FNQ-R 6 AMP 60 | HIGH VOLT BX |
| EFP2 | FUSE-PRIMARY INCOMING VOLTAGE HI VOLT | W6W5SZPS | 09FF003AWV | FUSE BUSS STYLE CC TYPE FNQ-R 3 AMP 600 | HIGH VOLT BX |
| EL | **>>LIGHT-PILOT OR INDICATOR** | | | | |

# COMPONENT PARTS LIST



| COMPONENT NUMBER | FUNCTION OF THIS COMPONENT | WHERE TO FIND THIS COMPONENT | MILNOR P/N | DESCRIPTION | LOCATION |
|---|---|---|---|---|---|
| ELASC | LIGHT-AUTOSPOT STOP CLEAN SIDE | W6W5SZASA | 09J060A37 | LAMP 1/2" AMB 125V IDI 1050QC3 | CLN SIDE SWPL |
| ELASS | LIGHT-AUTOSPOT STOP SOIL SIDE | W6W5SZASA | 09J060A37 | LAMP 1/2" AMB 125V IDI 1050QC3 | SWITCH PANEL |
| ELPCG | LIGHT-CLEAN SIDE HAS CONTROL | W6W5SZCS | 09J060A37 | LAMP 1/2" AMB 125V IDI 1050QC3 | CLEAN SWPNL |
| ELPCG | LIGHT-CLEAN SIDE HAS CONTROL | W6W5SZCSA | 09J060G37 | LAMP 1/2" GRN 125V IDI 1052QC3 | CLN SIDE SWPL |
| ELPCR | LIGHT-CLEAN SIDE DOES NOT HAVE CONTROL | W6W5SZCS | 09J060A37 | LAMP 1/2" AMB 125V IDI 1050QC3 | CLEAN SWPNL |
| ELPCR | LIGHT-SOIL SIDE HAS CONTROL | W6W5SZCSA | 09J060A37 | LAMP 1/2" AMB 125V IDI 1050QC3 | CLN SIDE SWPL |
| ELPS | LIGHT-POCKET SPOTTED SOIL | W6W5SZAS | 09J060A37 | LAMP 1/2" AMB 125V IDI 1050QC3 | A-SPOT SP SOIL |
| ELPS | LIGHT-POCKET SPOTTED CLEAN | W6W5SZAS | 09J060A37 | LAMP 1/2" AMB 125V IDI 1050QC3 | A-SPOT SP CLEAN |
| ELPSG | LIGHT-SOIL SIDE HAS CONTROL | W6W5SZCS | 09J060A37 | LAMP 1/2" AMB 125V IDI 1050QC3 | SOIL SWPNL |
| ELPSG | LIGHT -SOIL SIDE HAS CONTROL | W6W5SZCSA | 09J060R37 | LAMP 1/2" RED 125V IDI 1050QC1 | SWITCH PANEL |
| ELPSR | LIGHT-SOIL SIDE DOES NOT HAVE CONTROL | W6W5SZCS | 09J060A37 | LAMP 1/2" AMB 125V IDI 1050QC3 | SOIL SWPNL |
| ELPSR | LIGHT-SOIL SIDE NOT CONTROLLING | W6W5SZCSA | 09J060A37 | LAMP 1/2" AMB 125V IDI 1050QC3 | SWITCH PANEL |
| ELSG | LIGHT-SIGNAL SOIL SIDE | W6W5SZS+ | 09J060A37 | LAMP 1/2" AMB 125V IDI 1050QC3 | SOIL SWPNL |
| ELSG | LIGHT-SIGNAL SOIL SIDE | W6W5SZS+A | 09J060A37 | LAMP 1/2" AMB 125V IDI 1050QC3 | SOIL SWPNL |
| ELSPC | LIGHT-ILLUMINATED EMERGENCY STOP | W6W5SZS+ | 09N507E | ESTOP SWITCH HEAD RED CLEAR NEEDS 09N | CLEAN SWPNL |
| ELSPS | LIGHT-ILLUMINATED EMERGENCY STOP | W6W5SZS+ | 09N507E | ESTOP SWITCH HEAD RED CLEAR NEEDS 09N | SOIL SWPNL |
| EM | **>>ELECTRICTROMECHANICAL SOLENOID** | | | | |
| EMAS | CLUTCH-AUTOSPOT | W6W5SZMCA | 54H164A | CLUTCH 12VDC MAPM02 | DRIVE BASE |
| EMHR | METER-RUN TIME | W6W5SZS+ | 38C202 | HOUR METER 120VAC | LOW VOLT BOX |
| EMS | **>> EMERGENCY STOP SWITCHES** | | | | |
| EMSPC | SWITCH-EMERGENCY STOP CLEAN SIDE | W6W5SZDA | 09N505 | SW ASSY EMER STOP | CLN SIDE SWPL |
| EMSPS | SWITCH-EMERGENCY STOP SOIL SIDE | W6W5SZDA | 09N505 | SW ASSY EMER STOP | SWITCH PANEL |
| ES | **>>POWER SUPPLY-ELECTRONIC** | | | | |
| ESPS | POWER SUPPLY-120V TO +12,-12,+5V | W6W5SZBW | 08PSS3401T | 30 WATT POWER SUPPLY TESTED | LOW VOLT BOX |
| ESPS2 | POWER SUPPLY-120V TO +12 | W6W5SZBW | 08PSS2401T | PRW SUPY 40WATT 120/240V TO 12V TESTED | LOW VOLT BOX |
| ET | **>>OVERLOAD-MOTORS** | | | | |
| ETDR | OVERLOAD-DRAIN 72 ALL | W6W5SZMTA | 09FTC0120T | OL RELAY 12-32A AB #193-A3H1 | HIGH VOLT BX |
| ETE1 | OVERLOAD-LOW EXT 72"<346V | W6W5SZMTA | 09FTC0230T | OL RELAY 23-75A AB#193-A3K3 | HIGH VOLT BX |
| ETE1 | OVERLOAD-LOW EXT 72">346V | W6W5SZMTA | 09FTC0140T | OL RELAY 14-45A AB#193-A3J2 | HIGH VOLT BX |
| ETE2 | OVERLOAD-LOW EXT. 72" <346V | W6W5SZMTA | 09FTC0230T | OL RELAY 23-75A AB#193-A3K3 | HIGH VOLT BX |
| ETE2 | OVERLOAD-HIGH EXT. 72" >346V | W6W5SZMTA | 09FTC0140T | OL RELAY 14-45A AB#193-A3J2 | HIGH VOLT BX |
| ETVS | OVERLOAD-INVERTER 42044 | W6W5SZVP | 09FTD0121T | MCS OL RELAY ADJ.RANGE 12-37 | HIGH VOLT BX |
| ETVS | OVERLOAD-INVERTER 60044 | W6W5SZVP | 09FTD0230T | MCS OL RELAY ADJ.RANGE 23-75 | HIGH VOLT BX |

# COMPONENT PARTS LIST



| COMPONENT NUMBER | FUNCTION OF THIS COMPONENT | WHERE TO FIND THIS COMPONENT | MILNOR P/N | DESCRIPTION | LOCATION |
|---|---|---|---|---|---|
| ETWA | OVERLOAD-WASH 72" <346V | W6W5SZMTA | 09FTC0121T | OL RELAY 12-38A AB #193-A3H2 | HIGH VOLT BX |
| ETWA | OVERLOAD-WASH ,72">346V | W6W5SZMTA | 09FTC0120T | OL RELAY 12-32A AB #193-A3H1 | HIGH VOLT BX |
| EX | **>>TRANSFORMERS** | | | | |
| EX37-1 | TRANSFORMER-208/240>120VAC | W6W5SZPS | 09UA025A37 | XFMR 200-240PRI/120SEC 250V5/6 | HIGH VOLT BX |
| EX37-2 | TRANSFORMER-380/480>120VAC | W6W5SZPS | 09UA025AAB | XFMR 380-480PRI/120-240SEC250V | HIGH VOLT BX |
| EX37-3 | TRANSFORMER-600>120VAC | W6W5SZPS | 09U251AB37 | XFMR 600VPRI/120VSC-250VA-3%REG | HIGH VOLT BX |
| EX37-4 | TRANSFORMER-380VAC-60HZ | W6W5SZPS | 09UA025AA83 | XFMR 380/400/415VPRI/120VSEC 250VA 60HZ | HIGH VOLT BX |
| EX96A | TRANSFORMER-600->480V BUCK 42044 | W6W5SZMT6 | 09US050A96 | XFMR 1PH 5KVA 240/480X120/240 | SIDE OF MACHINE |
| EX96A | TRANSFORMER-600->480V BUCK 60044 | W6W5SZMT6 | 09US100A96 | XFMR 1PH 10KVA 240/480X120/240 | SIDE OF MACHINE |
| EX96B | TRANSFORMER-600->480V BUCK 42044 | W6W5SZMT6 | 09US050A96 | XFMR 1PH 5KVA 240/480X120/240 | SIDE OF MACHINE |
| EX96B | TRANSFORMER-600->480V BUCK 60044 | W6W5SZMT6 | 09US100A96 | XFMR 1PH 10KVA 240/480X120/240 | SIDE OF MACHINE |
| EXAS | TRANSFORMER-120V-16VAC | W6W5SZMCA | 09UB100A16 | XFMR 120/240VP EBR 12VDC 90 WATT | AUTOSPOT BOX |
| MS | MOTOR SAVER | W6W5SZVP | 09X370 | VOLT.MONT-MTR SAVER 190-480VAC | HIGH VOLT BOX |
| MS | MOTOR SAVER | W6W5SZVPA | 09X370 | VOLT.MONT-MTR SAVER 190-480VAC | HIGH VOLT BOX |
| MT | **>>MOTORS** | | | | |
| MTD | MOTOR-DRIVE | W6W5SZVP | MESSAGE SO | SEE SPECIFIC COMPONENT+NAMEPLATE | DRIVE BASE |
| MT | **>>FAN** | | | | |
| MTVS | FAN-INVERTER COOLING (42044) | W6W5SZS+ | 13AF100A37 | FAN 92CFM115V60 | HIGH VOLT BX |
| MTVS | FAN-INVERTER COOLING (60044) | W6W5SZS+ | 13AF235A37 | FAN 235CFM 115V 50/60 | HIGH VOLT BX |
| MV | **>>MOTOR POWER INVERTERS** | | | | |
| MVDBR | RESISTOR-DYNAMIC BRAKE 42044 ALL | W6W5SZVP | 09MV020RES | RESISTOR 20 OHM 300WATT | INVERTER BOX |
| MVDBR | RESISTOR-DYNAMIC BRAKE 6044 ALL | W6W5SZVPA | 09MV011RET | RESISTOR 11 OHM 1000 WATT | RESISTOR BOX |
| MVDBU | BRAKING UNIT-INVERTER LOW VOLT ONLY | W6W5SZVPA | 09MVBT25LC | BRAKEMODULE OPEN CHASIS INVERT | RESISTOR BOX |
| MVINR | REACTOR-IN LINE INVERTER 42044 (LOW VOLT) | W6W5SZVP | 09MX300A74 | REACTOR 25/30HP 230V 80A | HIGH VOLT BX |
| MVINR | REACTOR-IN LINE INVERTER 42044 (HIGH VOLT) | W6W5SZVP | 09MX300A96 | REACTOR 30HP 460V 45A | HIGH VOLT BX |
| MVINR | REACTOR-IN LINE INVERTER 60044 (LOW VOLT) | W6W5SZVPA | 09MX600A74 | REACTOR 150HP 230V 200A | INVERTER BOX |
| MVINR | REACTOR-IN LINE INVERTER 60044 (HIGH VOLT) | W6W5SZVPA | 09MX600A96 | REACTOR 50/60HP 460V 80A | INVERTER BOX |
| MVINV | INVERTER-SINGLE MOTOR DRIVE 42044 LOW VOL | W6W5SZVP | 09MWC07574 | A1000 INVERTER 75 AMP | HIGH VOLT BX |
| MVINV | INVERTER-SINGLE MOTOR DRIVE 42044 HIGH VOL | W6W5SZVP | 09MWC03996 | A1000 INVERTER 39 AMP | HIGH VOLT BX |
| MVINV | INVERTER-SINGLE MOTOR DRIVE 6044 (LOW VOLT | W6W5SZVPA | 09MWC14574 | A1000 INVERTER 145AMPS | INVERTER BOX |
| MVINV | INVERTER-SINGLE MOTOR DRIVE 6044 (HIGH VOL | W6W5SZVPA | 09MWC07596 | A1000 INVERTER 75 AMP | INVERTER BOX |
| MVLF | FILTER-INVERTER | W6W5SZVP | 09MVFILTR1 | RFI NOISE INPUT FILTER | HIGH VOLT BX |
| MVLF | FILTER-INVERTER | W6W5SZVPA | 09MVFILTR1 | RFI NOISE INPUT FILTER | INVERTER BOX |

# COMPONENT PARTS LIST



| COMPONENT NUMBER | FUNCTION OF THIS COMPONENT | WHERE TO FIND THIS COMPONENT | MILNOR P/N | DESCRIPTION | LOCATION |
|---|---|---|---|---|---|
| PS | **>>POWER SUPPLY-ELECTRONIC** | | | | |
| PSFL | POWER SUPPLY-FLASHING LIGHT (OPTIONAL) | W6W5SZFS | 08PSS3401T | 40 WATT POWER SUPPLY TESTED | LOW VOLT BOX |
| PX | **>>PROXIMITY SWITCH** | | | | |
| PX1C | PROX SW-POCKET 1 SPOTTED CLEAN | W6W5SZAS | 09RPS07RDS | 7MM SENSING RECTANGULAR SHLD | AUTOSPOT ASSY |
| PX1S | PROX SW-POCKET 1 SPOTTED SOIL | W6W5SZAS | 09RPS07RDS | 7MM SENSING RECTANGULAR SHLD | AUTOSPOT ASSY |
| PX2C | PROX SW-POCKET 2 SPOTTED CLEAN | W6W5SZAS | 09RPS07RDS | 7MM SENSING RECTANGULAR SHLD | AUTOSPOT ASSY |
| PX2S | PROX SW-POCKET 2 SPOTTED SOIL | W6W5SZAS | 09RPS07RDS | 7MM SENSING RECTANGULAR SHLD | AUTOSPOT ASSY |
| PXSP | PROX SW-SPEED PROX | W6W5SZVP | 09RPS07RDS | 7MM SENSING RECTANGULAR SHLD | AUTOSPOT ASSY |
| RS | **>>RESISTORS** | | | | |
| RS01 | RESISTOR 40OHM 25W | W6W5SZBW | ECEUMTRES | LOAD RESISTOR ASSY MILTOUCH EX | LOW VOLT BOX |
| RS02 | RESISTOR 16OHM 25W | W6W5SZBW | ECEUV8R | LOAD RESISTOR ASSY MILTOUCH | LOW VOLT BOX |
| SC | **>>SWITCH** | | | | |
| SCAS1 | SWITCH-AUTOSPOT ENABLE SOIL SIDE | W6W5SZASA | 09R015 | ACTUATOR,MICROSW #JV-9 (CLASS 004) | ASPOT SENSOR |
| SCAS2 | SWITCH-ASPOT SELECT 2ND POCK SOIL | W6W5SZASA | 09R015 | ACTUATOR,MICROSW #JV-9 (CLASS 004) | ASPOT SENSOR |
| SCAS3 | SWITCH-ASPOT SELECT 3ND POCK SOIL | W6W5SZASA | 09R015 | ACTUATOR,MICROSW #JV-9 (CLASS 004) | ASPOT SENSOR |
| SCAS4 | SWITCH-AUTOSPOT ENABLE CLEAN SIDE | W6W5SZASA | 09R015 | ACTUATOR,MICROSW #JV-9 (CLASS 004) | ASPOT SENSOR |
| SCAS5 | SWITCH-AUTOSPT 2ND POCK CLEAN SIDE | W6W5SZACA | 09R014A | MINI-SW SPDT STAKON #V15G1C26K | ASPOT SENSOR |
| SCAS6 | SWITCH-AUTOSPT 3RD POCK CLEAN SIDE | W6W5SZACA | 09R014A | MINI-SW SPDT STAKON #V15G1C26K | ASPOT SENSOR |
| SH | **>>SWITCH-HAND OPERATED** | | | | |
| SHASC | SWITCH-DESIRES AUTOSPOT POCKET CLEAN | W6W5SZACA | 09N041R | ROTSW 2POLE 8POSIT 5A125V ULCSA | CLEAN SWPNL |
| SHASC | SWITCH-DESIRES AUTOSPOT POCKET CLEAN | W6W5SZAS | 09N041R | ROTSW 2POLE 8POSIT 5A125V ULCSA | CLEAN SWPNL |
| SHASC | SWITCH-DESIRES AUTOSPOT POCKET CLEAN | W6W5SZVP | 09N041R | ROTSW 2POLE 8POSIT 5A125V ULCSA | CLEAN SWPNL |
| SHASS | SWITCH-DESIRES AUTOSPOT POCKET SOIL | W6W5SZAS | 09N041R | ROTSW 2POLE 8POSIT 5A125V ULCSA | SOIL SWPNL |
| SHASS | SWITCH-AUTOSPOT POCKET SOIL SIDE | W6W5SZASA | 09N041R | ROTSW 2POLE 8POSIT 5A125V ULCSA | SWITCH PANEL |
| SHASS | SWITCH-DESIRES AUTOSPOT POCKET SOIL | W6W5SZVP | 09N041R | ROTSW 2POLE 8POSIT 5A125V ULCSA | SOIL SWPNL |
| SHC+C | SWITCH-CLEAN SIDE INCH AUTOSPOTTING | W6W5SZD | 09N405PB10 | SWASS PBBK 1NO | CLEAN SWPNL |
| SHCCR | SWITCH-TRANSFER TO SOIL SIDE | W6W5SZCS | 09N405PB11 | SWASS PBBK1NO/1NC | CLEAN SWPNL |
| SHCCR | SWITCH-TRANSFER TO SOIL SIDE | W6W5SZCSA | 09N405PB11 | SWASS PBBK1NO/1NC | SWPNL CLEAN |
| SHDOC | SWITCH-DOOR OPEN CLEAN SIDE | W6W5SZD | 09N405PB11 | SWASS PBBK1NO/1NC | CLEAN SWPNL |
| SHDOC | SWITCH-DOOR OPEN CLEAN SIDE | W6W5SZDA | 09N405PB11 | SWASS PBBK1NO/1NC | SWPNL CLEAN |
| SHDOC | SWITCH-DOOR OPEN CLEAN SIDE | W6W5SZS+ | 09N405PB11 | SWASS PBBK1NO/1NC | CLEAN SWPNL |
| SHDOS | SWITCH-DOOR OPEN SOIL SIDE | W6W5SZD | 09N405PB11 | SWASS PBBK1NO/1NC | SOIL SWPNL |
| SHDOS | SWITCH-DOOR OPEN SOIL SIDE | W6W5SZDA | 09N405PB11 | SWASS PBBK1NO/1NC | SWITCH PANEL |

# COMPONENT PARTS LIST

| COMPONENT NUMBER | FUNCTION OF THIS COMPONENT | WHERE TO FIND THIS COMPONENT | MILNOR P/N | DESCRIPTION | LOCATION |
|---|---|---|---|---|---|
| SHS+ | SWITCH-START SOIL SIDE | W6W5SZD | 09N405PG10 | SWASS PBGN 1NO | SOIL SWPNL |
| SHS+ | SWITCH-START 3-WIRE | W6W5SZS+A | 09N405PG10 | SWASS PBGN 1NO | SOIL SWPNL |
| SHS+C | SWITCH-INCH-AUTOSPOT CLEAN SIDE | W6W5SZDA | 09N405PG10 | SWASS PBGN 1NO | SWPNL CLEAN |
| SHSEC | SWITCH-EMERGENCY STOP | W6W5SZS+ | 09N505 | SW ASSY EMER STOP | CLEAN SWPNL |
| SHSEC | SWITCH-EMERGENCY STOP (ILLUMINATED) | W6W5SZS+ | 09N507F | ESTOP CONTACT BLOCK WITH 120VAC LIGHT | CLEAN SWPNL |
| SHSES | SWITCH-EMERGENCY STOP | W6W5SZS+ | 09N505 | SW ASSY EMER STOP | SOIL SWPNL |
| SHSES | SWITCH-EMERGENCY STOP (ILLUMINATED) | W6W5SZS+ | 09N507F | ESTOP CONTACT BLOCK WITH 120VAC LIGHT | SOIL SWPNL |
| SHSMA | SWITCH-MASTER | W6W5SZSP | 09N405M210 | SWASS PB YELLOW INO | SOIL SWPNL |
| SHSMA | SWITCH-MASTER | W6W5SZSPA | 09N405M210 | SWASS PB YELLOW INO | SOIL SWPNL |
| SHWCF | SWITCH-FLUSH | W6W5SZCF | 09N405S320 | SWASS S3W 2NO | 5 COMP. SUPPLY |
| SHWJC | SWITCH-JOG CLEAN SIDE | W6W5SZACA | 09N405S211 | SWASS S2W 1NO+1NC | CLEAN SWPNL |
| SHWJC | SWITCH-JOG CLEAN SIDE | W6W5SZVP | 09N405S211 | SWASS S2W 1NO+1NC | CLEAN SWPNL |
| SHWJC | SWITCH-JOG CLEAN SIDE | W6W5SZVPA | 09N405S211 | SWASS S2W 1NO+1NC | CLEAN SWPNL |
| SHWJS | SWITCH-JOG SOIL SIDE | W6W5SZASA | 09N405M211 | SWASS M2W 1NO+1NC | SWITCH PANEL |
| SHWJS | SWITCH-JOG SOIL SIDE | W6W5SZVP | 09N405S211 | SWASS S2W 1NO+1NC | SOIL SWPNL |
| SHWJS | SWITCH-JOG SOIL SIDE | W6W5SZVPA | 09N405S211 | SWASS S2W 1NO+1NC | SOIL SWPNL |
| SM | **>>SWITCH-MECHANICALLY OPERATED** | | | | |
| SMCD | SWITCH-SECONDARY DOOR SWITCH CLEAN | W6W5SZS+ | 09RM01212S | CAPSW 12FT 180DEG ROLLER SILVER | CLEAN DOOR |
| SMCD2 | SWITCH-SECONDARY DOOR SWITCH CLEAN | W6W5SZS+A | 09RM01212S | CAPSW 12FT 180DEG ROLLER SILVER | CLEAN DOOR |
| SMERB | SWITCH-EXCURSION | W6W5SZS+ | 09R008A | MICSW SPDT PAINTED BZE6-RN 01 | MACH HOUSE |
| SMERB | SWITCH-EXCURSION | W6W5SZS+A | 09R008A | MICSW SPDT PAINTED BZE6-RN 01 | MACH HOUSE |
| SMPLC | SWITCH-DOOR (LATCH) CLEAN SIDE | W6W5SZD | 09R012 | MICSW SPDT PAINTED BZE6-RN 01 | CLEAN DOOR |
| SMPLC | SWITCH-DOOR CLOSED CLEAN SIDE | W6W5SZDA | 09R012 | MICSW SPDT PAINTED BZE6-RN 01 | CLN SIDE DOOR |
| SMPLS | SWITCH-DOOR (LATCH) SOIL SIDE | W6W5SZD | 09R012 | MICSW SPDT PAINTED BZE6-RN 01 | SOIL DOOR |
| SMPLS | SWITCH-DOOR CLOSED SOIL SIDE | W6W5SZDA | 09R012 | MICSW SPDT PAINTED BZE6-RN 01 | SOIL SIDE DR |
| SMSD | SWITCH-SECONDARY DOOR SWITCH | W6W5SZS+ | 09RM01212S | CAPSW 12FT 180DEG ROLLER SILVER | SOIL DOOR |
| SMSD2 | SWITCH-SECONDARY DOOR SWITCH SOIL | W6W5SZS+A | 09RM01212S | CAPSW 12FT 180DEG ROLLER SILVER | SOIL DOOR |
| SMWVB | SWITCH-MACHINE VIBRATION | W6W5SZS+ | 09R020 | SWITCH NC VIBR#WZ-2RW84429-P52 | HIGH VOLT BX |
| SMWVB | SWITCH-MACHINE VIBRATION | W6W5SZS+A | 09R020 | SWITCH NC VIBR#WZ-2RW84429-P52 | HIGH VOLT BX |
| SP | **>>SWITCH-PRESSURE OPERATED** | | | | |
| SPB2R | PRESSURE SW SECOND BRAKE | W6W5SZS+A | 09N082A | PRESSW NASON CLOSE @ 62 LB. | AIR VALVE BX |
| SPBR | PRESSURE SW-BRAKE | W6W5SZI1 | 09N082A | PRESSW NASON CLOSE @ 62 LB. | AIR VALVE BX |
| SPOF | PRESSURE SW-OVERFLOW | W6W5SZEV | 09N069 | PRESS SW 4"WC INVENSYS 738-719 | LVL SW BOX |

# COMPONENT PARTS LIST

| COMPONENT NUMBER | FUNCTION OF THIS COMPONENT | WHERE TO FIND THIS COMPONENT | MILNOR P/N | DESCRIPTION | LOCATION |
|---|---|---|---|---|---|
| SPOF | PRESSURE SW-OVERFLOW | W6W5SZEVA | 09N069 | PRESS SW 4"WC INVENSYS 738-719 | LVL SW BOX |
| ST | **>>TEMPERATURE PROBES** | | | | |
| TP | TEMPERATURE PROBE | W6W5SZBW | 30R0043PB | TEMPERATURE PROBE ASSY=BRASS | DRAIN SUMP |
| VE | **>>VALVE-ELECTRIC OPERATED** | | | | |
| VEAS | VALVE-AUTOSPOT SW ENGAGE | W6W5SZASA | 96R301B37 | 1/8"AIRPILOT 3W NC 120V50/60 | AIR VALVE BX |
| VEB2R | VALVE-2ND BRAKE | W6W5SZSP | 96R302B37 | 1/8"AIRPILOT 3W NO 120V50/60 | AIR VALVE BX |
| VEB2R | VALVE-2ND BRAKE | W6W5SZSPA | 96R302B37 | 1/8"AIRPILOT 3W NO 120V50/60 | AIR VALVE BX |
| VEC01 | VALVE-CHEMICAL #1 FLUSH | W6W5SZCF | 96TDC2AA37 | 1/2" N/C 2WAY 120V50/60C VALVE | SUPPLY INJEC |
| VEC02 | VALVE-CHEMICAL #2 FLUSH | W6W5SZCF | 96TDC2AA37 | 1/2" N/C 2WAY 120V50/60C VALVE | SUPPLY INJEC |
| VEC03 | VALVE-CHEMICAL #3 FLUSH 42044 | W6W5SZCF | 96TCC2AA37 | 3/8" N/C 2WAY 120V50/60C VALVE | SUPPLY INJEC |
| VEC03 | VALVE-CHEMICAL #3 FLUSH 60044, 72044 | W6W5SZCF | 96TDC2AA37 | 1/2" N/C 2WAY 120V50/60C VALVE | SUPPLY INJEC |
| VEC04 | VALVE-CHEMICAL #4 FLUSH 42044 | W6W5SZCF | 96TCC2AA37 | 3/8" N/C 2WAY 120V50/60C VALVE | SUPPLY INJEC |
| VEC04 | VALVE-CHEMICAL #4 FLUSH 60044, 72044 | W6W5SZCF | 96TDC2AA37 | 1/2" N/C 2WAY 120V50/60C VALVE | SUPPLY INJEC |
| VEC05 | VALVE-CHEMICAL #5 FLUSH 42044 | W6W5SZCF | 96TCC2AA37 | 3/8" N/C 2WAY 120V50/60C VALVE | SUPPLY INJEC |
| VEC05 | VALVE-CHEMICAL #5 FLUSH 60044, 72044 | W6W5SZCF | 96TDC2AA37 | 1/2" N/C 2WAY 120V50/60C VALVE | SUPPLY INJEC |
| VEC06 | VALVE-CHEMICAL #6 | W6W5SZCX | MESSAGE EW | SUPPLIED BY OTHERS | SUPPLY VLVST |
| VEC07 | VALVE-CHEMICAL #7 | W6W5SZCX | MESSAGE EW | SUPPLIED BY OTHERS | SUPPLY VLVST |
| VEC08 | VALVE-CHEMICAL #8 | W6W5SZCX | MESSAGE EW | SUPPLIED BY OTHERS | SUPPLY VLVST |
| VEC09 | VALVE-CHEMICAL #9 | W6W5SZCX | MESSAGE EW | SUPPLIED BY OTHERS | SUPPLY VLVST |
| VEC10 | VALVE-CHEMICAL #10 | W6W5SZCX | MESSAGE EW | SUPPLIED BY OTHERS | SUPPLY VLVST |
| VEC11 | VALVE-CHEMICAL #11 | W6W5SZCX | MESSAGE EW | SUPPLIED BY OTHERS | SUPPLY VLVST |
| VEC12 | VALVE-CHEMICAL #12 | W6W5SZCX | MESSAGE EW | SUPPLIED BY OTHERS | SUPPLY VLVST |
| VEC13 | VALVE-CHEMICAL #13 | W6W5SZCX | MESSAGE EW | SUPPLIED BY OTHERS | SUPPLY VLVST |
| VEC14 | VALVE-CHEMICAL #14 | W6W5SZCX | MESSAGE EW | SUPPLIED BY OTHERS | SUPPLY VLVST |
| VEC15 | VALVE-CHEMICAL #15 | W6W5SZCX | MESSAGE EW | SUPPLIED BY OTHERS | SUPPLY VLVST |
| VECFM | VALVE-FLUSH MANIFOLD | W6W5SZCX | MESSAGE EW | SUPPLIED BY OTHERS | SUPPLY VLVST |
| VEDRR | VALVE-DRAIN TO REUSE | W6W5SZEV | 96R302B37 | 1/8"AIRPILOT 3W NO 120V50/60 | AIR VALVE BX |
| VEDRR | VALVE-DRAIN TO REUSE | W6W5SZEVA | 96R302B37 | 1/8"AIRPILOT 3W NO 120V50/60 | AIR VALVE BX |
| VEDRS | VALVE-DRAIN TO SEWER | W6W5SZEV | 96R301B37 | 1/8"AIRPILOT 3W NC 120V50/60 | AIR VALVE BX |
| VEDRS | VALVE-DRAIN TO SEWER | W6W5SZEVA | 96R301B37 | 1/8"AIRPILOT 3W NC 120V50/60 | AIR VALVE BX |
| VEPCC | VALVE-DOOR SEAL CLEAN SIDE | W6W5SZD | 96R301B37 | 1/8"AIRPILOT 3W NC 120V50/60 | AIR VALVE BX |
| VEPCC | VALVE-DOOR SEAL CLEAN SIDE | W6W5SZDA | 96R301B37 | 1/8"AIRPILOT 3W NC 120V50/60 | AIR VALVE BX |
| VEPLC | VALVE-DOOR LATCH CLEAN SIDE | W6W5SZD | 96R301B37 | 1/8"AIRPILOT 3W NC 120V50/60 | AIR VALVE BX |

# COMPONENT PARTS LIST



| COMPONENT NUMBER | FUNCTION OF THIS COMPONENT | WHERE TO FIND THIS COMPONENT | MILNOR P/N | DESCRIPTION | LOCATION |
|---|---|---|---|---|---|
| VEPLC | VALVE-DOOR LATCH CLEAN SIDE | W6W5SZDA | 96R301B37 | 1/8"AIRPILOT 3W NC 120V50/60 | AIR VALVE BX |
| VEPLS | VALVE-DOOR LATCH SOIL SIDE | W6W5SZD | 96R301B37 | 1/8"AIRPILOT 3W NC 120V50/60 | AIR VALVE BX |
| VEPLS | VALVE-DOOR LATCH SOIL SIDE | W6W5SZDA | 96R301B37 | 1/8"AIRPILOT 3W NC 120V50/60 | AIR VALVE BX |
| VEPPI | VALVE-INFLATE DOOR SEAL SOIL SIDE | W6W5SZS+A | 96T1001A37 | SOLENOID 120V #238210-032-D | AIR VALVE BX |
| VEPPS | VALVE-DOOR SEAL SOIL SIDE | W6W5SZS+ | 96R301B37 | 1/8"AIRPILOT 3W NC 120V50/60 | AIR VALVE BX |
| VESC | VALVE-SPRAY | W6W5SZCF | 96R301B37 | 1/8"AIRPILOT 3W NC 120V50/60 | AIR VALVE BX |
| VESTM | VALVE-STEAM PILOT | W6W5SZEV | 96R301B37 | 1/8"AIRPILOT 3W NC 120V50/60 | AIR VALVE BX |
| VESTM | VALVE-STEAM PILOT | W6W5SZEVA | 96R301B37 | 1/8"AIRPILOT 3W NC 120V50/60 | AIR VALVE BX |
| VETCW | VALVE-COOLDOWN WATER | W6W5SZEV | 96R301B37 | 1/8"AIRPILOT 3W NC 120V50/60 | AIR VALVE BX |
| VETCW | VALVE-COOLDOWN WATER | W6W5SZEVA | 96R301B37 | 1/8"AIRPILOT 3W NC 120V50/60 | AIR VALVE BX |
| VEWBR | VALVE-BRAKE (RELEASE BRAKE WHEN ON) | W6W5SZEV | 96R301B37 | 1/8"AIRPILOT 3W NC 120V50/60 | AIR VALVE BX |
| VEWBR | VALVE-BRAKE (RELEASE BRAKE WHEN ON) | W6W5SZEVA | 96R301B37 | 1/8"AIRPILOT 3W NC 120V50/60 | AIR VALVE BX |
| VEWBRS | VALVE-RELEASES UPPER BRAKE | W6W5SZEV | 96R301B37 | 1/8"AIRPILOT 3W NC 120V50/60 | AIR VALVE BX |
| VEWBRS | VALVE-RELEASES UPPER BRAKE | W6W5SZEVA | 96R301B37 | 1/8"AIRPILOT 3W NC 120V50/60 | AIR VALVE BX |
| VEWCL | VALVE-CLUTCH | W6W5SZSPA | 96TBC3BA37 | 1/4" N/C 3WAY 120V50/60C VALVE | AIR VALVE BX |
| VEWCLA | VALVE-CLUTCH | W6W5SZSPA | 96R302B37 | 1/8"AIRPILOT 3W NO 120V50/60 | AIR VALVE BX |
| VEWPD | VALVE-PUSH DOWN | W6W5SZSP | 96R301B37 | 1/8"AIRPILOT 3W NC 120V50/60 | AIR VALVE BX |
| VEWPD | VALVE-PUSH DOWN | W6W5SZSPA | 96TCC3AA37 | 3/8" N/C 3WAY 120V50/60C VALVE | AIR VALVE BX |
| VEWVC | VALVE-COLD WATER | W6W5SZEV | 96R301B37 | 1/8"AIRPILOT 3W NC 120V50/60 | AIR VALVE BX |
| VEWVC | VALVE-COLD WATER | W6W5SZEVA | 96R301B37 | 1/8"AIRPILOT 3W NC 120V50/60 | AIR VALVE BX |
| VEWVH | VALVE-HOT WATER | W6W5SZEV | 96R301B37 | 1/8"AIRPILOT 3W NC 120V50/60 | AIR VALVE BX |
| VEWVH | VALVE-HOT WATER | W6W5SZEVA | 96R301B37 | 1/8"AIRPILOT 3W NC 120V50/60 | AIR VALVE BX |
| VEWVX | VALVE-EXTRA WATER | W6W5SZEV | 96R301B37 | 1/8"AIRPILOT 3W NC 120V50/60 | AIR VALVE BX |
| VEWVX | VALVE-EXTRA WATER | W6W5SZEVA | 96R301B37 | 1/8"AIRPILOT 3W NC 120V50/60 | AIR VALVE BX |
| ZF | **>>RECTIFIER** | | | | |
| ZFAS | RECTIFIER-AUTOSPOT | W6W5SZMCA | 09A020EBR | RECTIFIER (EBR) 15A/600PIV | AUTOSPOT BOX |

# PELLERIN MILNOR CORPORATION

# LIMITED STANDARD WARRANTY

We warrant to the original purchaser that MILNOR machines including electronic hardware/software (hereafter referred to as "equipment"), will be free from defects in material and workmanship for a period of one year from the date of shipment (unless the time period is specifically extended for certain parts pursuant to a specific MILNOR published extended warranty) from our factory with no operating hour limitation. This warranty is contingent upon the equipment being installed, operated and serviced as specified in the operating manual supplied with the equipment, and operated under normal conditions by competent operators.

Providing we receive written notification of a warranted defect within 30 days of its discovery, we will—at our option—repair or replace the defective part or parts, EX Factory (labor and freight specifically NOT included). We retain the right to require inspection of the parts claimed defective in our factory prior to repairing or replacing same. We will not be responsible, or in any way liable, for unauthorized repairs or service to our equipment, and this warranty shall be void if the equipment is tampered with, modified, or abused, used for purposes not intended in the design and construction of the machine, or is altered in any way without MILNOR's written consent.

Parts damaged by exposure to weather, to aggressive water, or to chemical attack are not covered by this warranty. For parts which require routine replacement due to normal wear—such as gaskets, contact points, brake and clutch linings, belts, hoses, and similar parts—the warranty time period is 90 days.

We reserve the right to make changes in the design and/or construction of our equipment (including purchased components) without obligation to change any equipment previously supplied.

ANY SALE OR FURNISHING OF ANY EQUIPMENT BY MILNOR IS MADE ONLY UPON THE EXPRESS UNDERSTANDING THAT MILNOR MAKES NO EXPRESSED OR IMPLIED WARRANTIES OF MERCHANTABILITY OR FITNESS FOR ANY PARTICULAR USE OR PURPOSE OR ANY OTHER WARRANTY IMPLIED BY LAW INCLUDING BUT NOT LIMITED TO REDHIBITION. MILNOR WILL NOT BE RESPONSIBLE FOR ANY COSTS OR DAMAGES ACTUALLY INCURRED OR REQUIRED AS A RESULT OF: THE FAILURE OF ANY OTHER PERSON OR ENTITY TO PERFORM ITS RESPONSIBILITIES, FIRE OR OTHER HAZARD, ACCIDENT, IMPROPER STORAGE, MIS-USE, NEGLECT, POWER OR ENVIRONMENTAL CONTROL MALFUNCTIONS, DAMAGE FROM LIQUIDS, OR ANY OTHER CAUSE BEYOND THE NORMAL RANGE OF USE. REGARDLESS OF HOW CAUSED, IN NO EVENT SHALL MILNOR BE LIABLE FOR SPECIAL, INDIRECT, PUNITIVE, LIQUIDATED, OR CONSEQUENTIAL COSTS OR DAMAGES, OR ANY COSTS OR DAMAGES WHATSOEVER WHICH EXCEED THE PRICE PAID TO MILNOR FOR THE EQUIPMENT IT SELLS OR FURNISHES.

THE PROVISIONS ON THIS PAGE REPRESENT THE ONLY WARRANTY FROM MILNOR AND NO OTHER WARRANTY OR CONDITIONS, STATUTORY OR OTHERWISE, SHALL BE IMPLIED.

WE NEITHER ASSUME, NOR AUTHORIZE ANY EMPLOYEE OR OTHER PERSON TO ASSUME FOR US, ANY OTHER RESPONSIBILITY AND/OR LIABILITY IN CONNECTION WITH THE SALE OR FURNISHING OF OUR EQUIPMENT TO ANY BUYER.

BMP720097/25142

BIUUUD19 (Published) Book specs- Dates: 20081231 / 20081231 / 20081231 Lang: ENG01 Applic: UUU

# How to Get the Necessary Repair Components

This document uses Simplified Technical English.
Learn more at http://www.asd-ste100.org.

You can get components to repair your machine from the approved supplier where you got this machine. Your supplier will usually have the necessary components in stock. You can also get components from the Milnor® factory.

Tell the supplier the machine model and serial number and this data for each necessary component:

- The component number from this manual
- The component name if known
- The necessary quantity
- The necessary transportation requirements
- If the component is an electrical component, give the schematic number if known.
- If the component is a motor or an electrical control, give the nameplate data from the used component.

To write to the Milnor factory:

Pellerin Milnor Corporation
Post Office Box 400
Kenner, LA 70063-0400
UNITED STATES

Telephone: 504-467-2787
Fax: 504-469-9777
Email: parts@milnor.com

— End of BIUUUD19 —

BIUUUK01 (Published) Book specs- Dates: 20130308 / 20130308 / 20130308 Lang: ENG01 Applic: PCR UUU

# How to Use Milnor® Electrical Schematic Diagrams

Milnor® electrical schematic manuals contain a table of contents/component list and a set of schematic drawings. These documents are cross referenced and must be used together.

The table of contents/components list shows, for every component on every schematic in the manual, the component item number (explained in detail below), statement of function, parent schematic number, part number, description and electric box location. In older manuals, two component lists are provided: List 1 sorts the components by function, and List 2 by type of component. Newer schematic manuals include only the list sorted by component number.

The schematic drawings use symbols for each electromechanical component, and indicate the function of each. Integrated circuits are not shown, but the function of each microprocessor input and output is stated. Certain electrical components not pertinent to circuit logic, such as wire connectors, are not represented on the schematic.

Most machines require several schematics to describe the complete control system and all the options available on the included models. In most manuals there are some schematic pages that don't apply to your specific machine because certain options and configurations are mutually exclusive or are not necessary in all markets. You may find it helpful to mark or remove such pages. A schematic page that only applies to a subset of machines will normally state, in the title, which models and/or options it covers. Compare this with the nameplate on your machine and with your purchase records.

Each schematic is devoted to circuits with common functions (e.g., microprocessor inputs, motor contactors). Schematics appear in the manual in alphanumeric order.

## 1. Component Prefix Classifications and Descriptions

Component item numbers consist of up to six characters and appear as part of a component's symbol on the schematic. The first two characters indicate the general class of component, and the remaining characters are a mnemonic for the function. For example, “CD” is the code for all time delay relays, and “SR” stands for safety reset. Thus, CDSR is a time delay relay that serves as a safety reset.

The following are descriptions of electrical components used in Milnor® machines. Descriptions are in alphabetical order by the component class code (two character prefix).

> **Note 1:** Some component class codes do not have a corresponding symbol, but are represented by a box and an accompanying note describing the component. Examples of such codes are BA (printed circuit board), ED (electronic display), and ES (electronic power supply).

**BA=Printed Circuit Board**—Insulating substrate on which a thin pattern of copper conductors has been formed to connect discrete electronic components also mounted on the board.

**CB=Circuit Breaker (Figure 1)**—Automatic switch that opens an electric circuit in abnormal current conditions (e.g., an overload).

**Figure 1: Circuit Breaker (CB)**

**CD=Control, Time Delay Relay (Figure 2)**—A relay whose contacts switch only after a fixed or adjustable delay, once voltage has been applied to its coil. The contacts switch back to normal (de-energized state) immediately when the voltage is removed.

**Figure 2: Time Delay Relay (CD)**

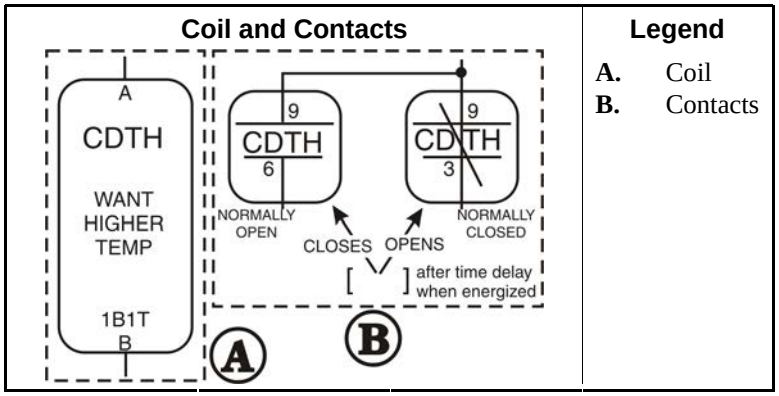


**CL=Control, Latch Relay (Figure 3)**—A relay which latches in an energized or set position when operated by one coil (the latch/set coil). The relay stays latched even though coil voltage is removed. The relay releases or unlatches when voltage is applied to a second coil (the unlatch/reset coil).

**Figure 3: Latch Relay (CL)**

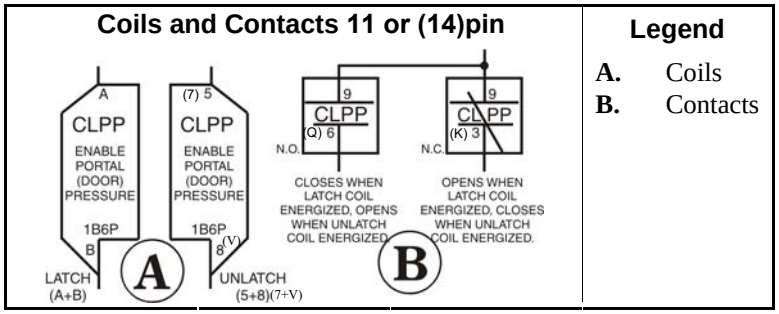


**CR=Control, Relay (Figure 4)**—A relay whose contacts switch immediately when voltage is applied to its coil and revert to normal when the voltage is removed.

**Figure 4: Standard Relay (CR)**

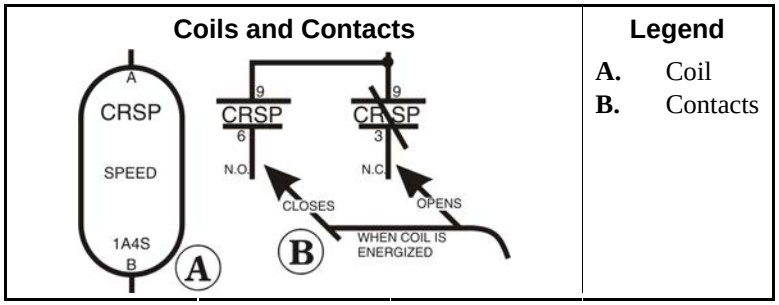


**CP=Control, Photo-Eye (Figure 5)**—Photo-eyes sense the presence of an object without direct physical contact. Photo-eyes consist of a transmitter, receiver, and output module. These components may be housed in one assembly with the transmitter bouncing light off of a reflector to the receiver, or these components can be housed in two separate assemblies with the transmitter pointed directly at the receiver. The photo-eye can be set to turn on its output either when the light beam becomes blocked (dark operate) or when it becomes un-blocked (light operate).

**Figure 5: Photo-eye (CP)**

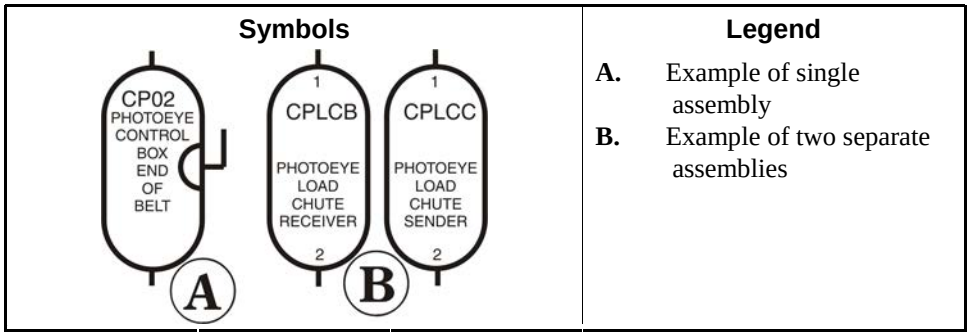


**CS=Control, Contactor/Motor Starter (Figure 6)**—A relay capable of handling heavier electrical loads, usually a motor.

**Figure 6: Other Control Symbols**

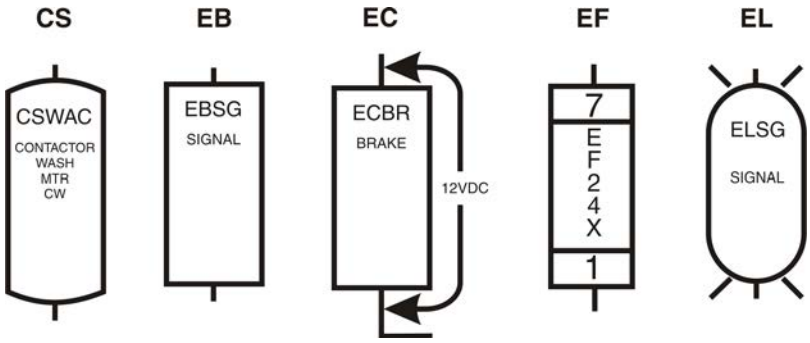


**EB=Electric Buzzer (Figure 6)**—An audible signaling device.

**EC=Electric Clutch (Figure 6)**—A clutch consists of a coil and a rotor. The rotor has two separate rotating plates. These plates are free to rotate independent of each other until the coil is energized. Once energized the two plates turn as one.

**ED=Electronic Display**—A visual presentation of data, such as an LCD (liquid crystal display), LED (light emitting diode) display, or VFD (vacuum florescent display).

**EF=Electric Fuse (Figure 6)**—A fuse is an over-current safety device with a circuit opening fusible member which is heated and severed by the passage of over-current through it.

**EL=Electric Light (Figure 6)**—Indicator lights may be either incandescent or fluorescent.

**EM=Electro Magnet Solenoid**—A device consisting of a core surrounded by a wire coil through which an electric current is passed. While current is flowing, iron is attracted to the core (e.g., a pinch tube drain valve solenoid).

**ES=Electronic Power Supply**—A device that converts AC (alternating current) to filtered and regulated DC (direct current). The input voltage to the power supply is usually 120 or 240 VAC. The output is +5, +12, and -12 VDC.

**ET=Thermal Overload (Figure 7)**—A safety device designed to protect a motor. A thermal overload consists of an overload block, heaters, and an auxiliary contact. The auxiliary contact is normally installed in a safety (three-wire) circuit that stops power to the motor contactor coil when a motor overload occurs.

**Figure 7: Thermal Overload (ET)**

| Schematic Symbol | Legend |
|---|---|
| 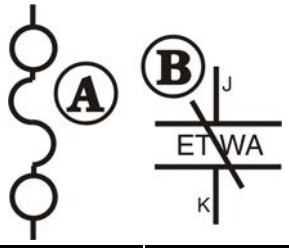  | **A.** Heater (one per phase)<br>**B.** Overload relay; contacts open if overload condition exists |

**EX=Electrical Transformer (Figure 8)**—A device that transfers electrical energy from one isolated circuit to another, often raising or lowering the voltage in the process.

**KB=Keyboard**—Device similar to a typewriter for making entries to a computer.

**MN=Electronic Monitor (CRT)**—A cathode ray tube used for visual presentation of data.

**MR=Motors (Figure 9)**—Electromechanical device that converts electrical energy into mechanical energy.

**Figure 8: Transformer (EX)**

**Figure 9: Electric Motor (MR)**

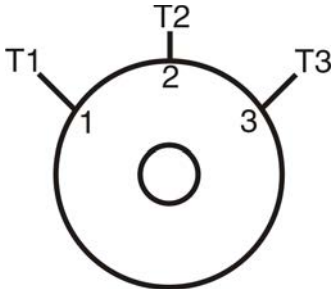


**MV=Motor (Variable Speed) Inverter**—To vary the speed of an AC motor, the volts to frequency ratio must be kept constant. The motor will overheat if this ratio is not maintained. The motor variable speed inverter converts three phase AC to DC. The inverter then uses this DC voltage to generate AC at the proper voltage and frequency for the commanded speed.

**Note 2:** Switch symbols used in the schematics and described below always depict the switch in its un-actuated state.

**PX=Proximity Switch (Figure 10)**—A device which reacts to the proximity of an target without physical contact or connection. The actuator or target causes a change in the inductance of the proximity switch which causes the switch to operate. Proximity switches can be two-wire (AC) or three-wire (DC) devices.

**Figure 10: Proximity Switches (PX)**

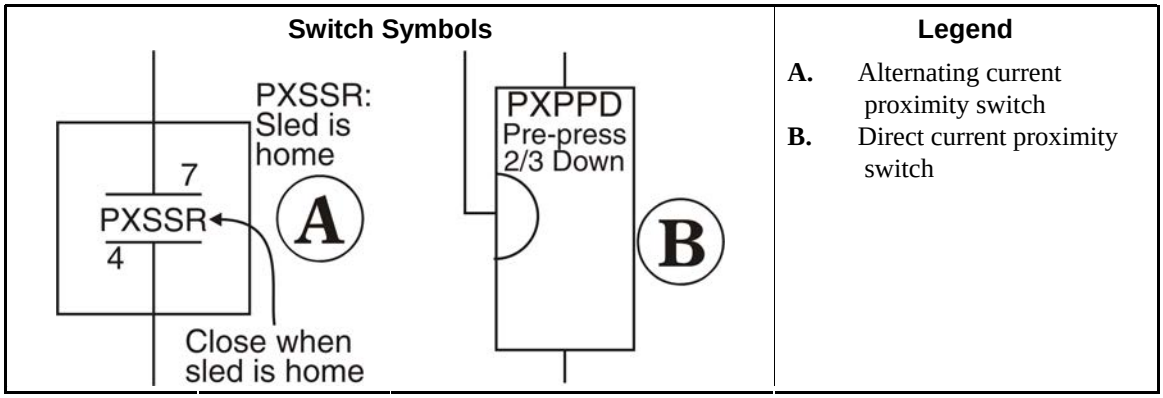


**SC=Switch, Cam Operated (Figure 11)**—A switch in which the electrical contacts are opened and/or closed by the mechanical action of a cam(s). Applications include 35-50 pound timer operated machines, Autospot, timer reversing motor assembly, and some balancing systems.

**SH=Switch, Hand Operated (Figure 12)**—A switch that is manually operated (e.g., *Start button*, *Master switch*, etc.).

**Figure 11: Cam Switch (SC)**

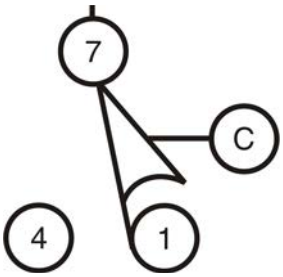


**Figure 12: Hand Operated Switch (SH)**

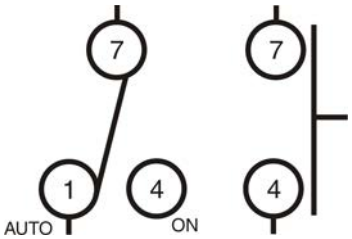


**SK=Switch, Key Lock (Figure 13)**—A switch that requires a key to operate. This prevents unauthorized personnel from gaining access to certain functions (e.g., the *Program menu*).

**SL=Switch, Level Operated (Figure 14)**—A switch connected to a float that causes the switch to open and close as the level changes.

**Figure 13: Key Switch (SK)**

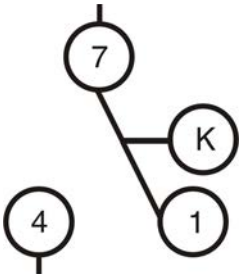


**Figure 14: Level Switch (SL)**

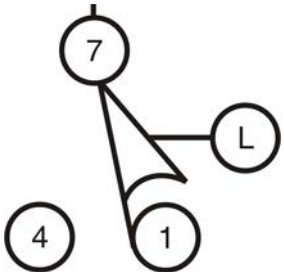


**SM=Switch, Mechanically Operated (Figure 15)**—A switch that is mechanically operated by a part of or the motion of the machine (e.g., door closed switch, tilt limit switches, etc.)

**SP=Switch, Pressure Operated (Figure 16)**—A switch in which a diaphragm presses against a switch actuator.

**Figure 15: Mechanical Switch (SM)**

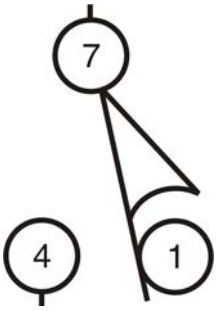


**Figure 16: Pressure Switch (SP)**

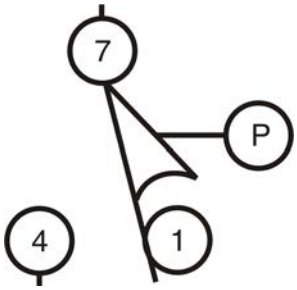


**ST=Switch, Temperature Operated (Figure 17)**—A switch that is actuated at a preset temperature (e.g., dryer safety probes) or has adjustable set points (e.g., Motometers or Combistats).

**TB=Terminal Board (Figure 18)**—A strip or block for attaching or terminating wires.

**Figure 17: Temperature Switch (ST)**

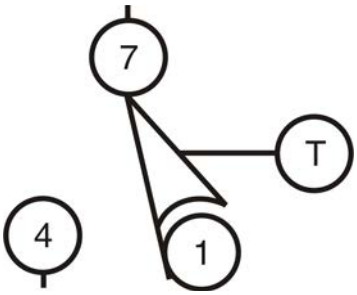


**Figure 18: Terminal Board (TB)**

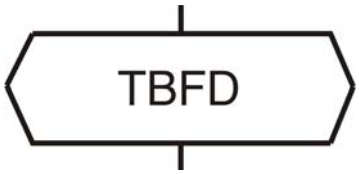


**VE=Valve, Electric Operated (Figure 19)**—A valve operated by an electric coil to control the flow of fluid. The fluid can be air, water or hydraulic.

**Figure 19: Electrically Operated Valve (VE)**

**ZF=Rectifier (Figure 20)**—A solid state device that converts alternating current to direct current.

**Figure 20: Bridge Rectifier (ZF)**

| Component Symbol | Legend |
|---|---|
| 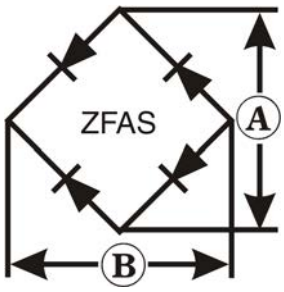  | **A.** Alternating current input<br>**B.** Direct current output |

**Figure 21: Bridge Rectifier**

| Component | Legend |
|---|---|
| 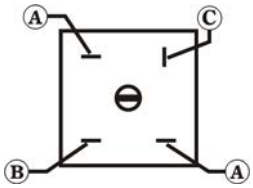  | **A.** Alternating current in<br>**B.** Negative direct current out<br>**C.** Positive direct current out |

**WC=Wiring Connector**—A coupling device for joining two cables or connecting a cable to an electronic circuit or piece of equipment. Connectors are male or female, according to whether they plug into or receive the mating connector.

## 2. Component Terminal Numbering

**CAUTION 1: Risk of Mis-wiring**—Due to electrical component manufacturing inconsistencies, the pin numbers imprinted on components such as connectors and relay bases used on Milnor machines often do not correspond to the pin numbers shown in the schematics.

- Ignore pin numbers imprinted on in-line connectors (e.g., Molex connectors) and relay bases.
- Use the pin identification illustrations herein to identify pins on these components.

**Figure 22: Plug-in Relays**

**11-pin Relay with Grey Base**

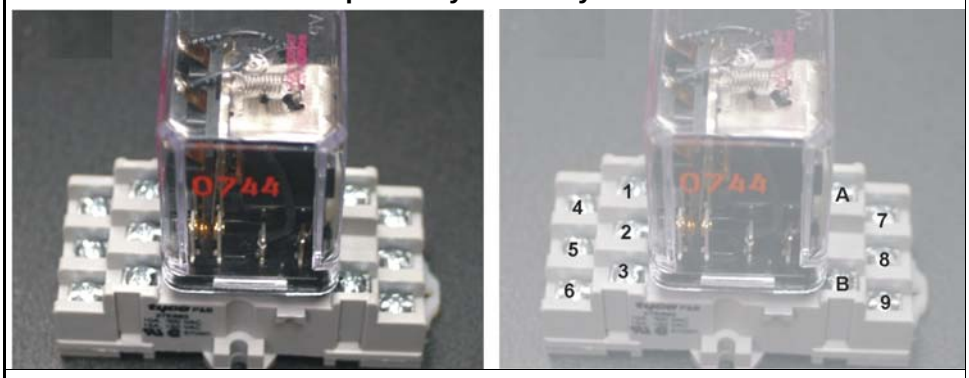


**14-pin Relay with Grey Base (older)**

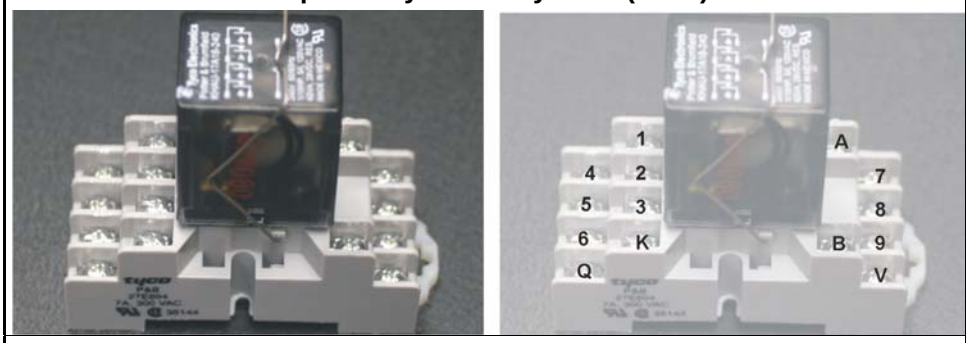


**14-pin Relay with Black Base (newer)**

**14-pin Relay with Beige Base (rare)**

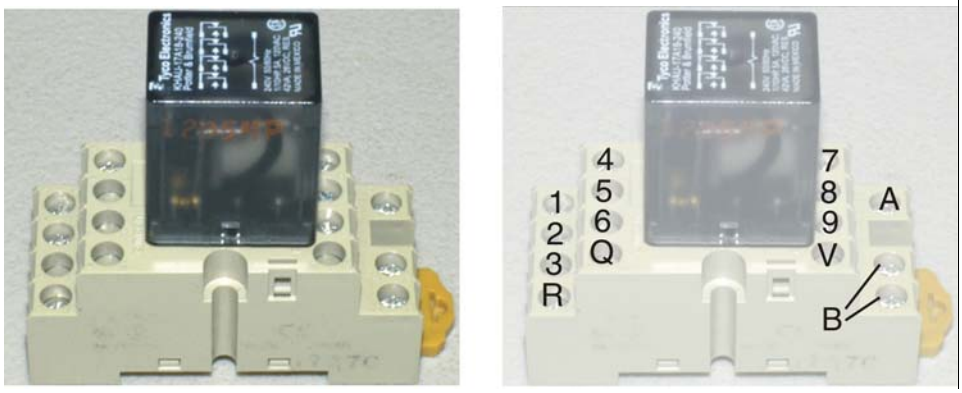


**Legend**

**Left.** View of relay and base

**Right.** Same view, showing pin numbers

**Note 3:** Relay functional names ending with the letter "M" (e.g., CRxxM) are not discrete components but are a component of a printed circuit board. They are usually not individually replaceable.

**Figure 23: AMP Connector Pin Locations**

**36-pin Connector**

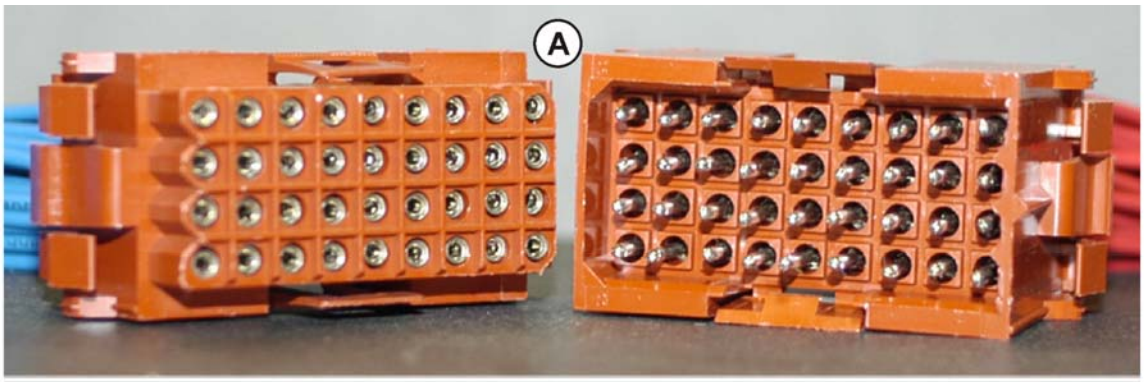


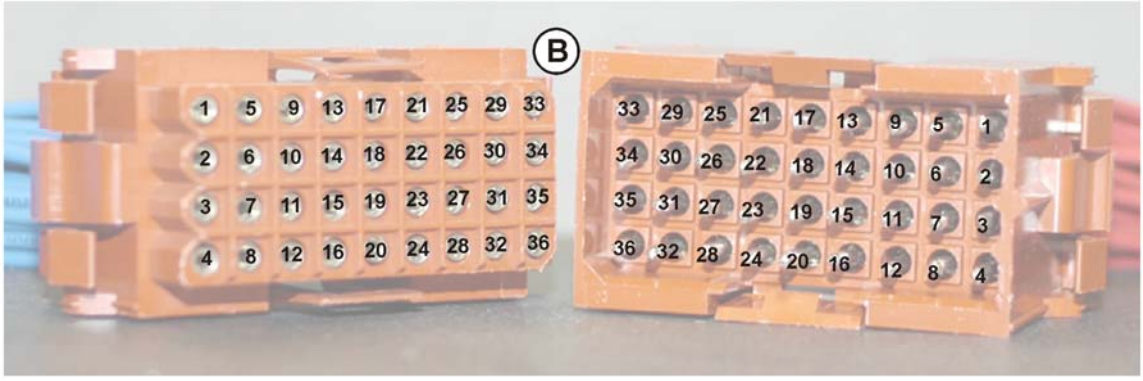


**18-pin Connector**

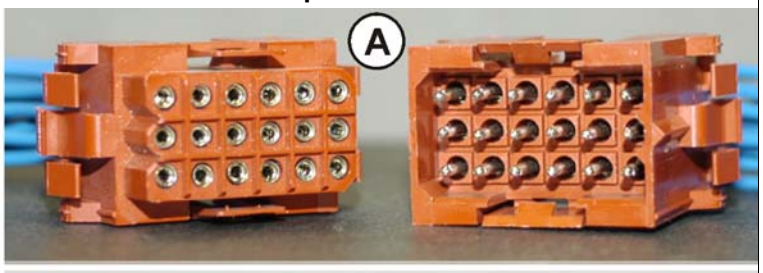


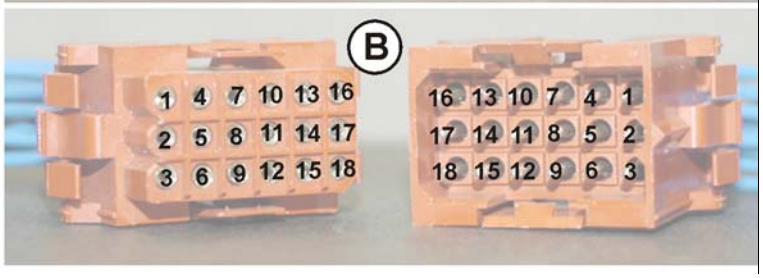


**Legend**

**A.** View of mating halves of connector
**B.** Same view, showing assigned pin numbers

**Figure 24: Molex Connector Pin Locations**

**15-pin Connector**

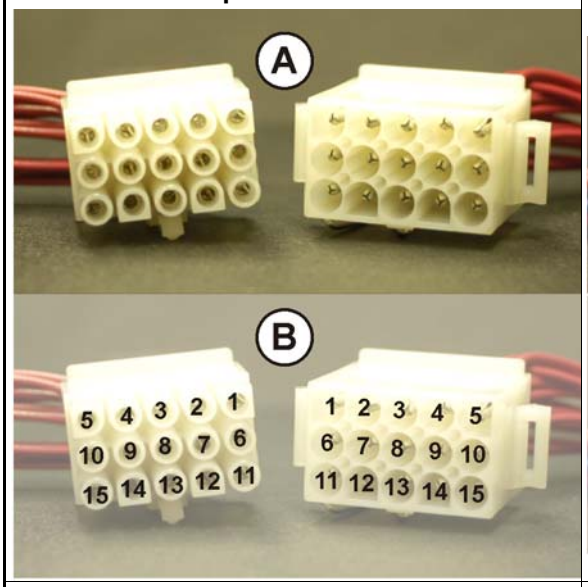


**9-pin Connector**

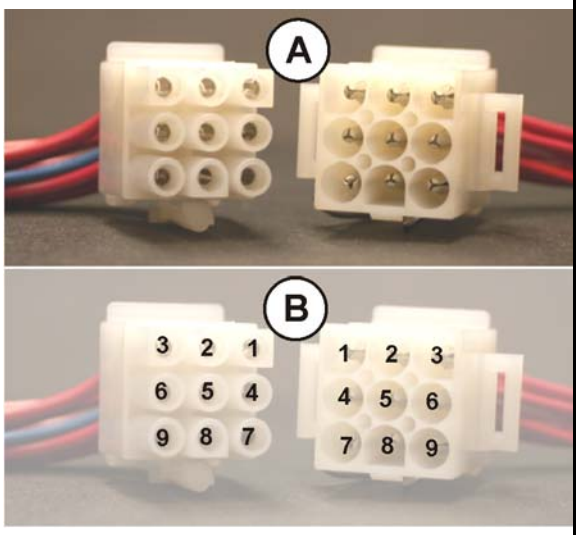


**6-pin Connector**

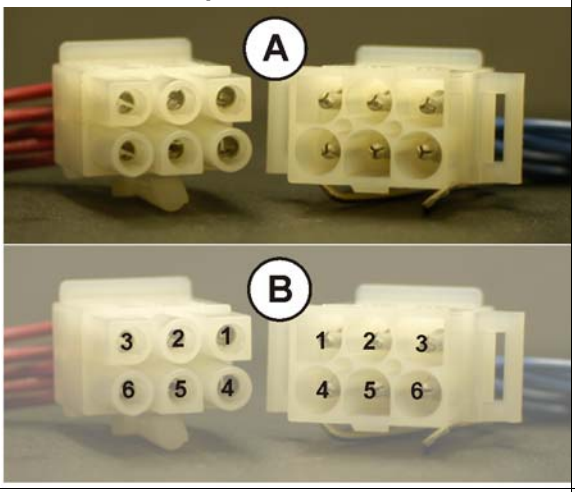


**4-Pin Connector**

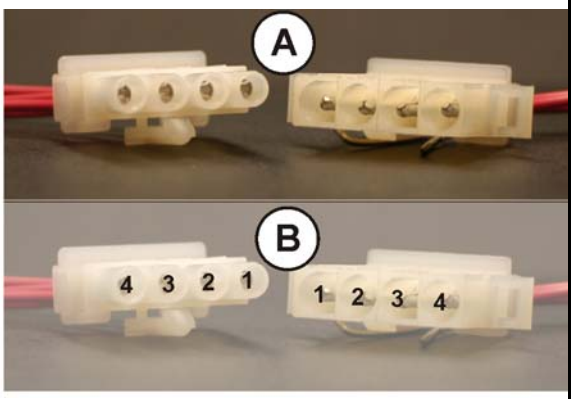


**2-pin Connector**

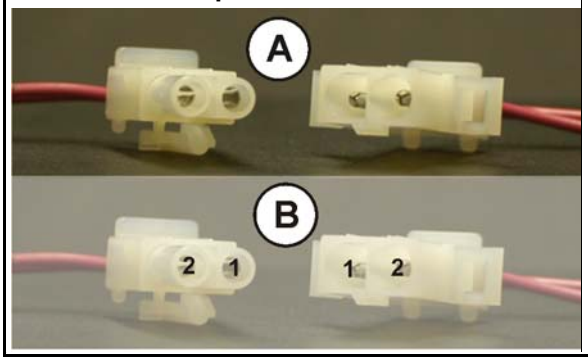


**Legend**

**A.** View of mating halves of connector
**B.** Same view, showing assigned pin numbers

**Figure 25: Pressure Switch**

| Component | Legend |
|---|---|
| 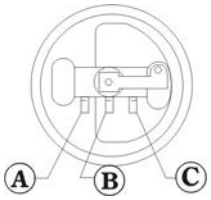  | **A.** Contact 1—Normally open<br>**B.** Contact 2—Normally closed<br>**C.** Contact 3—Common |

**Figure 26: Toggle Switch**

| Component | Legend |
|---|---|
| 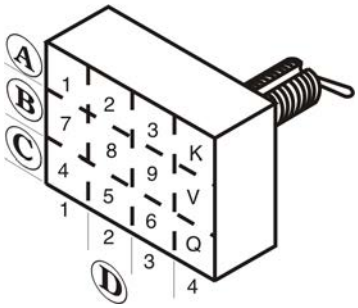  | **A.** Normally closed contacts<br>**B.** Common contacts<br>**C.** Normally open contacts<br>**D.** Pole |

**Figure 27: Switch with Replaceable Contact Blocks**

| Rotary or Push-button Switch Component | Legend |
|---|---|
| 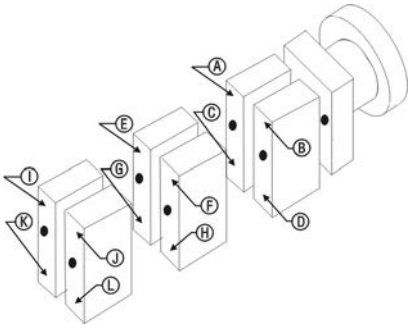  | **A.** Terminal 7<br>**B.** Terminal 8<br>**C.** Terminal 4 if normally open; terminal 1 if normally closed<br>**D.** Terminal 5 if normally open; terminal 2 if normally closed<br>**E.** Terminal V<br>**F.** Terminal 9<br>**G.** Terminal Q if normally open; terminal K if normally closed<br>**H.** Terminal 6 if normally open; terminal 3 if normally closed<br>**I.** Terminal W<br>**J.** Terminal X<br>**K.** Terminal R if normally open; terminal L if normally closed<br>**L.** Terminal S if normally open; terminal M if normally closed |

## 3. Features of Milnor® Electrical Schematic Diagrams

Document BMP010012 (following this section) is a sample schematic, based on a schematic diagram for the Milnor® gas dryer. For the purposes of this exercise, the schematic is shown gray and explanations of the items on the schematic are shown black.

The item numbers below correspond to the circled item numbers shown on the drawing.

1. The first six characters of the drawing number (W6DRYG) indicate that this is a wiring diagram (W), identify the generation of controls (6), and identify the type of machine (DRYG=Gas Dryer). These characters appear in the drawing number of every schematic in the set.

   The characters following the first six are unique to each drawing. The two characters identified as the page number are an abbreviation for the function performed by the depicted

circuitry (S+=three-wire circuit) and establish the order in which the schematic occurs in the manual (schematics are arranged in alpha-numeric order in the manual).

Whenever circuitry changes are significant enough to warrant publishing a new schematic drawing, the new drawing number will be the same as the old except for the major revision letter (A in the example).

2. Included in the drawing title are the class of control system, the title of this circuit, and the circuit voltage.
3. Line numbers are provided along the bottom edge of the drawing. These permit service personnel in the field and at the Milnor® factory to quickly relate circuit locations when discussing troubleshooting over the phone. Page and line numbers are referenced on the drawing as explained in items five and six below.
4. Relay contacts show the page and line number on which the relay coil may be found. This is the type of cross referencing most frequently used in troubleshooting.
5. Relay coils show the page and line number on which its associated contacts are located.
6. Relay contacts and relay coils show the physical location of the relay.
7. The designation MTA applies to electronic circuit board connections. Typically, a control system will contain several different types of circuit boards and one or more boards of each type. A numerical suffix identifies the board type and a numerical prefix identifies which one of several boards of a given type is being depicted. For example, the designation 1MTA5 identifies this as the first I/O board (8 output, 16 input board) in the control system. As shown on the drawing, a pin number follows the board number, separated by a dash. Thus, 1MTA5-9 is pin 9 on this board. The numerical designations for board types vary from one control system to another. Some of the board types commonly encountered on the Mark V and Mark VI washer-extractor control and their designations are as follows:
   - MTM1-MTM8 = Mother board
   - MTA1-MTA5 = 8 output, 16 input (8/16) boards
   - MTA11-MTA14 = 24 output boards
   - MTA30-MTA40 = processor boards
   - MTA41-MTA43 = digital to analog (D/A) boards
   - MTA51-MTA55 = analog to digital (A/D) boards
   - MTA81-MTA85 = balance A-D board

   The complete listing of the boards utilized in a given control system can be found in the component list for that system.
8. Wire numbers, as described earlier in this section, are shown at appropriate locations on the schematic drawing.
9. Where diamond symbols appear at the end of a conductor, these are match points for continuing the schematic on another drawing. The page and line number that continues the circuit is printed adjacent to the diamond symbol. Where more than one match point appears on the referenced page, match diamonds containing corresponding letters.

— End of BIUUUK01 —

This page intentionally left blank.

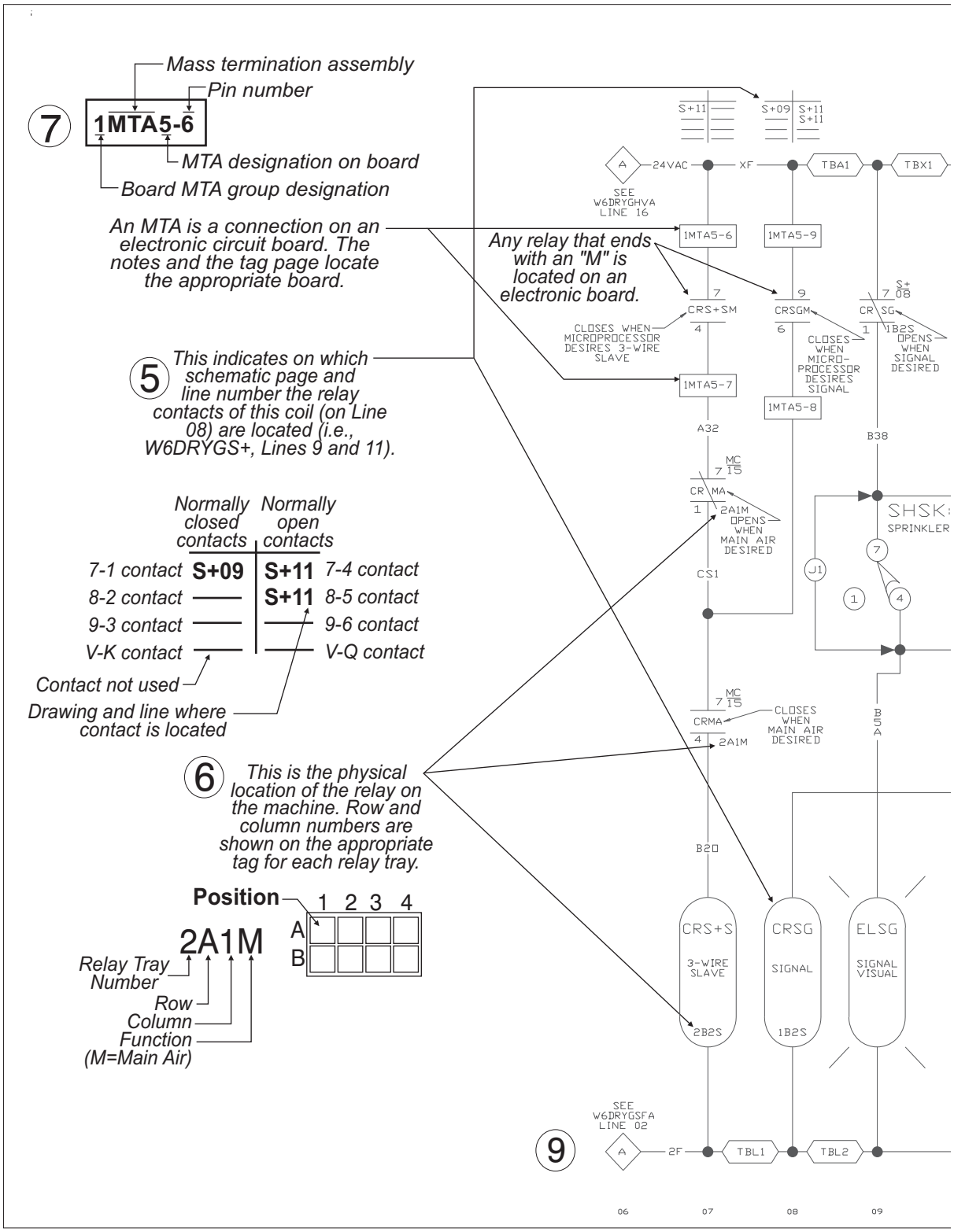


BMP010012 (left) / 2018343

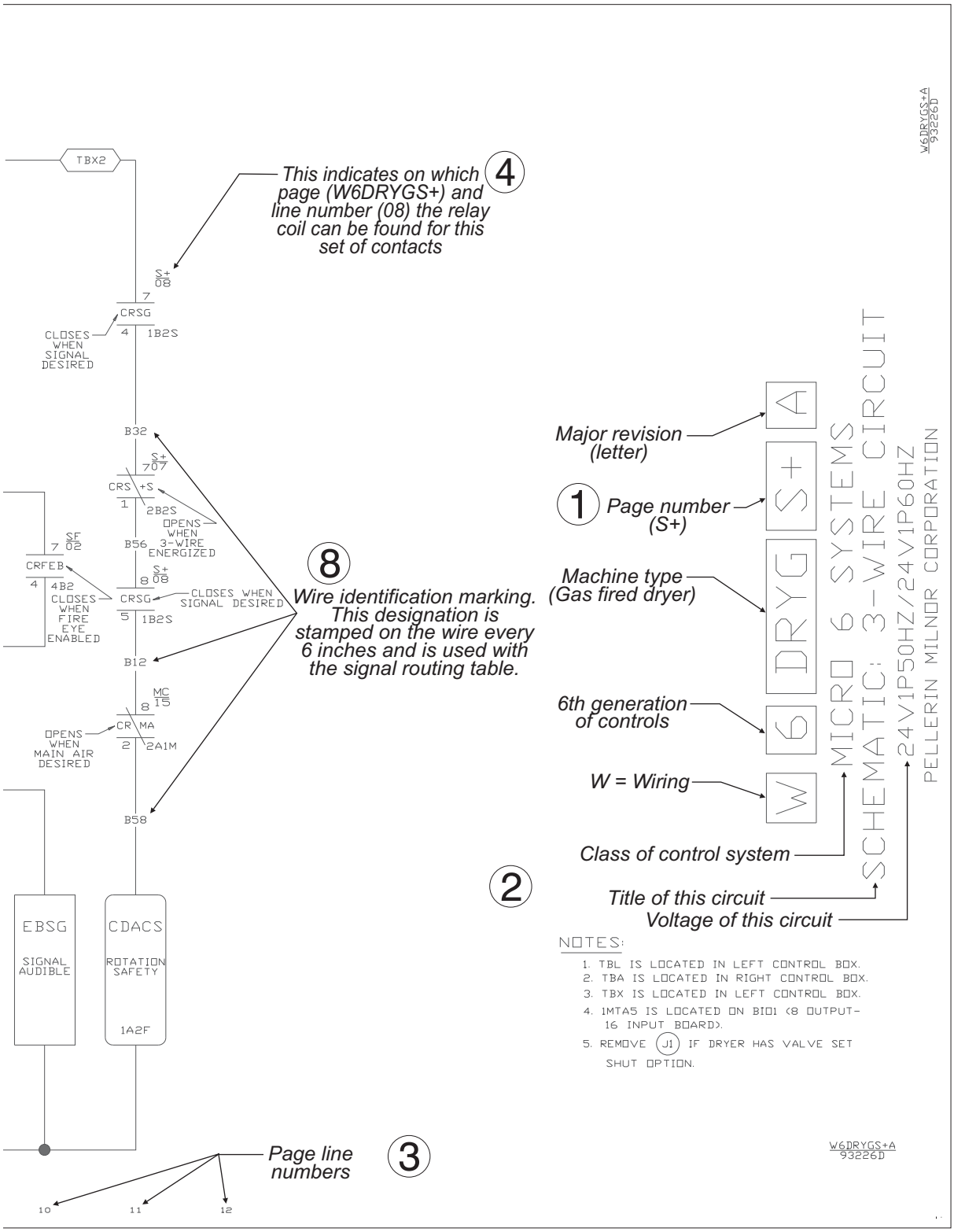


BMP010012 (right) / 2018343

| FIGURE | ELECTRICAL VALUES | SUFFIXES | | | | | | | | | |
|---|---|---|---|---|---|---|---|---|---|---|---|
| | | B | | H | | M | | T | | U | |
| | | 50HZ | 60HZ | 50HZ | 60HZ | 50HZ | 60HZ | 50HZ | 60HZ | 50HZ | 60HZ |
| A | 1.000 | 208 | 230 | | | 200 | 220 | 220 | 240 | 200-220 | 208-240 |
| B | $\sqrt{3}$ | | | | 208 | 346 | 380 | 380 | | 346-380 | 380 |
| C | 2.000 | 416 | 460 | 220 | 240 | 400 | 440 | 440 | 480 | 400-440 | 440-480 |
| D | $1+\sqrt{3}$ | | | | | | 600 | | | | 600 |
| E | $2\sqrt{3}$ | | | 380 | | | | | | | |

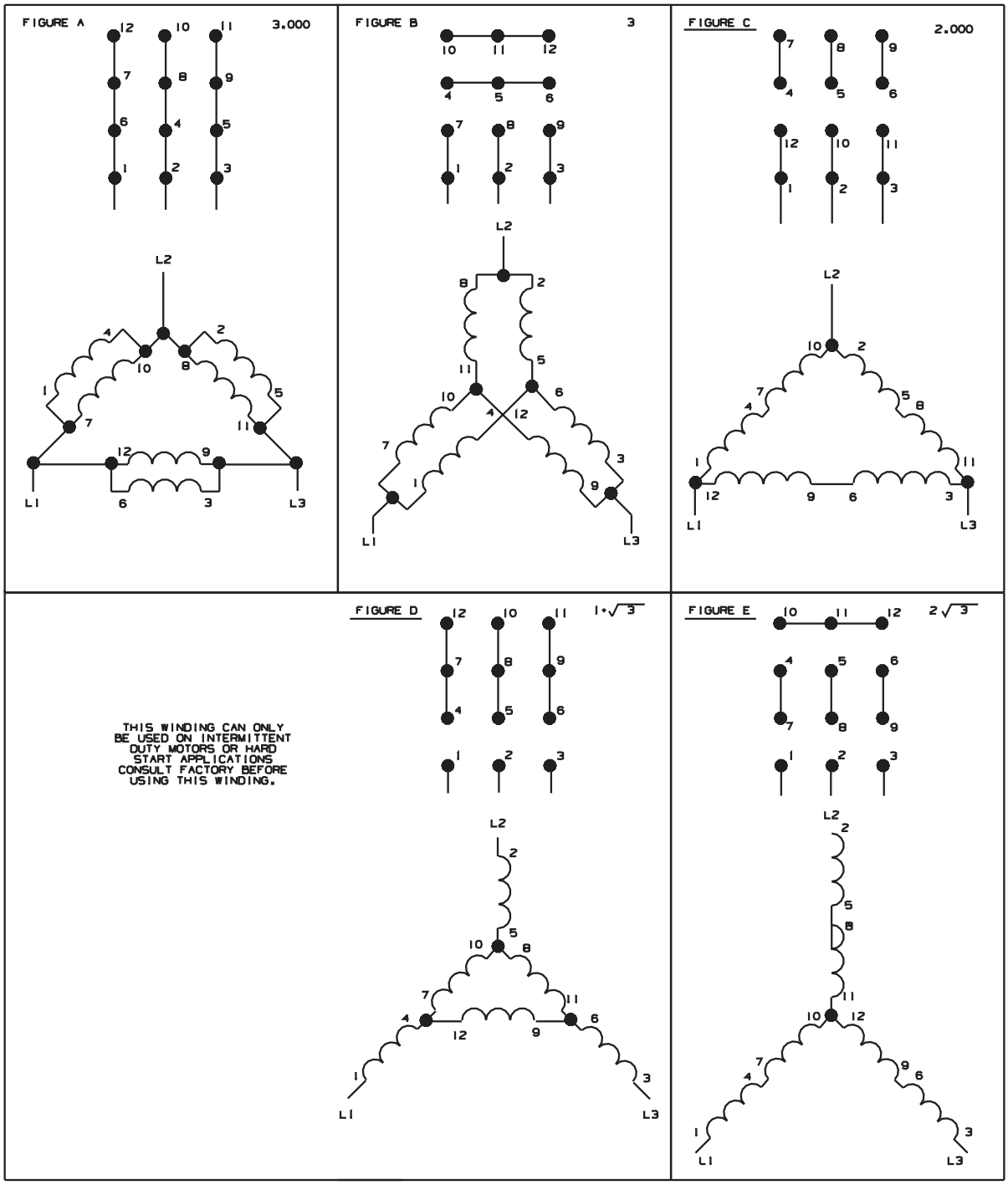


06 07 08 09 10 11 12 13 14 15 16 17

# BMP850029

## MOTOR CONNECTION DIAGRAMS

THREE PHASE SINGLE SPEED MOTORS WITH MULTIPLE VOLTAGE RATINGS

(ONLY FOR MOTOR SUFFIXES LISTED)

PELLERIN MILNOR CORPORATION

BMP850029
993628

BMP850029
993628

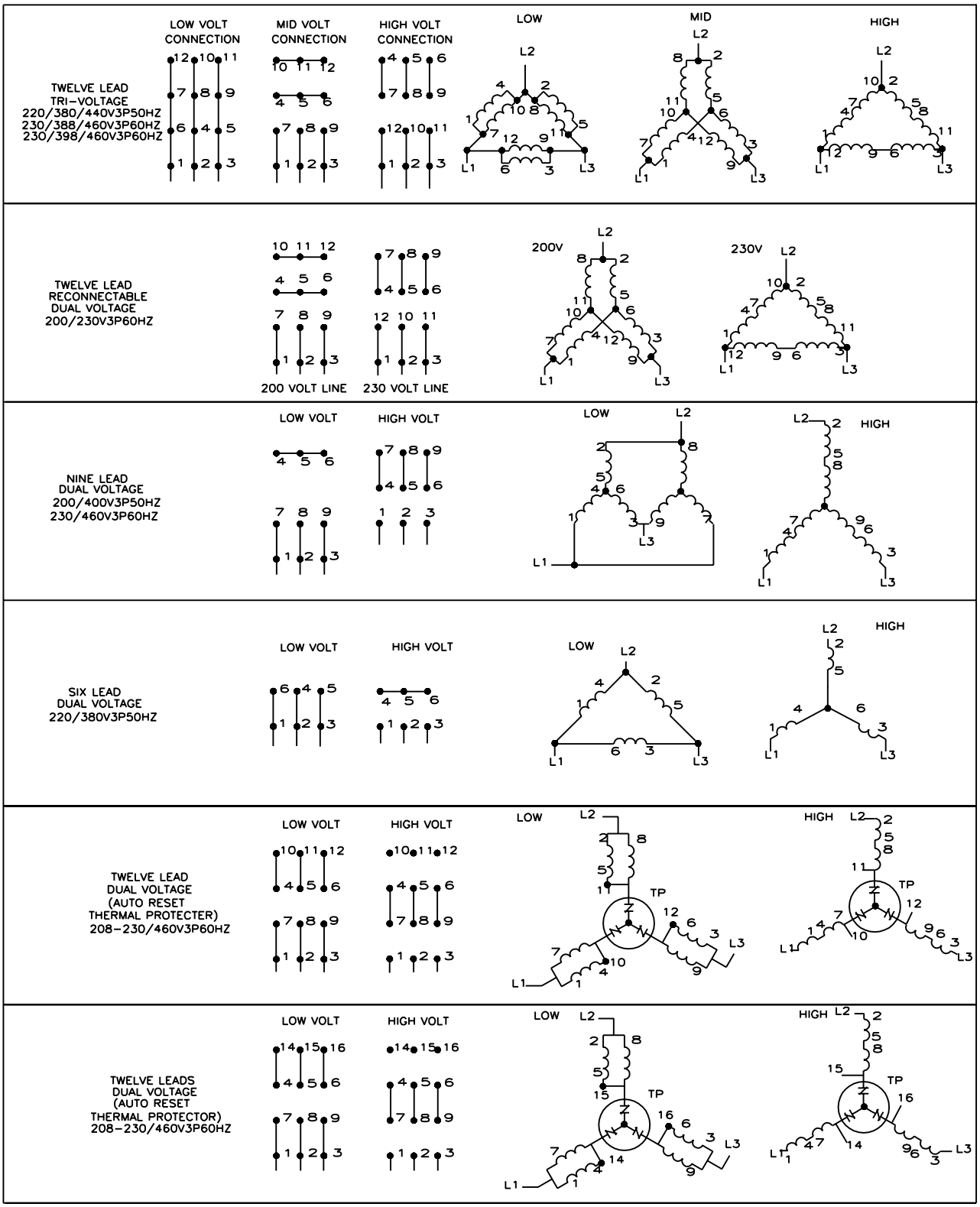


# W80008

THREE PHASE
MOTOR CONNECTION DIAGRAMS
SINGLE SPEED MOTORS WITH MULTIPLE VOLTAGE RATINGS

PELLERIN MILNOR CORPORATION

W80008
2001253A

| BIO-1 (HIGH SPEED) | B024-1 | BIO-2 (HIGH SPEED) | BO24-2 (OPTIONAL) (STANDARD ON 7244 MODELS) | BI/O-A AUTOSPOT ON 1MTR MODELS ONLY | BO24-3 (OPTIONAL) |
|---|---|---|---|---|---|
| **INPUTS** | **OUTPUTS** | **INPUTS** | **OUTPUTS** | **INPUTS** | **OUTPUTS** |
| 0 NOT USED | 8 NOT USED | 16 NOT USED | 40 CHEM 14 | 32 NOT USED | 72 PROGRAM. OUT #00 |
| 1 DOOR CLOSED | 9 ALT. EXT ACCEL/DECEL | 17 NOT USED | 41 CHEM 9 | 33 SOIL SIDE PCKT 3 SPOTTED | 73 PROGRAM OUT #01 |
| 2 INVERTER TRIPPED | 10 DOOR UNLOCK | 18 NOT USED | 42 CHEM 13 | 34 SOIL SIDE PCKT 2 SPOTTED | 74 PROGRAM OUT #02 |
| 3 AUTOSPOT DESIRED | 11 CW WASH | 19 NOT USED | 43 CHEM FLUSH | 35 SOIL SIDE PCKT 1 SPOTTED | 75 PROGRAM OUT #03 |
| 4 NOT USED | 12 CCW WASH | 20 CLEAN CONTROL DESIRED | 44 CHEM 15 | 36 SPOT CLEAN POCKET 2 | 76 PROGRAM OUT #04 |
| 5 NOT USED | 13 STEAM VALVE | 21 NOT USED | 45 CHEM 11 | 37 SPOT CLEAN POCKET 1 | 77 PROGRAM OUT #05 |
| 6 CHEM SAVE | 14 SIGNAL | 22 NOT USED | 46 CHEM SAVE | 38 SPOT SOILED POCKET 2 | 78 PROGRAM OUT #06 |
| 7 BASKET ROTATING | 15 THREE WIRE RELAY | 23 EXERNAL FAULT | 47 NOT USED | 39 SPOT SOILED POCKET 1 | 79 PROGRAM OUT #07 |
| 8 EXCURSION LIMIT | 16 BRAKE RELEASE | 24 NOT USEDD | 48 CHEM 10 | 40 SPOT SOILED POCKET 3 | 80 PROGRAM OUT #08 |
| 9 NOT USED | 17 HOT WATER | 25 NOT USED | 49 NOT USED | 41 OK TO SPOT | 81 PROGRAM OUT #09 |
| 10 BRAKE PADS WORN | 18 COLD WATER | 26 NOT USED | 50 CHEM 6 | 42 SPOT CLEAN POCKET 3 | 82 PROGRAM OUT #10 |
| 11 BRAKE IS OFF | 19 THIRD WATER | 27 NOT USED | 51 CHEM 7 | 43 NOT USED | 83 PROGRAM OUT #11 |
| 12 NOT USED | 20 SEWER DRAIN | 28 SIGNAL CANCEL | 52 CHEM 8 | 44 NOT USED | 84 PROGRAM OUT #12 |
| 13 NOT USED | 21 REUSE DRAIN | 29 FRESH WATER METER | 53 CHEM 12 | 45 CLEAN POCKET 3 SPOTTED | 85 PROGRAM OUT #13 |
| 14 NOT USED | 22 NOT USED | 30 SEWER METER | 54 NOT USED | 46 CLEAN POCKET 2 SPOTTED | 86 PROGRAM OUT #14 |
| 15 3-WIRE ENERGIZED | 23 NOT USED | 31 NOT USED | 55 DRAIN MOTOR | 47 CLEAN POCKET 1 SPOTTED | 87 PROGRAM OUT #15 |
| **OUTPUTS** | 24 PUSH DOWN | **OUTPUTS** | 56 LOW EXTRACT MOTOR | **OUTPUTS** | 88 PROGRAM OUT #16 |
| 0 NOT USED | 25 TRANSFER CONTROL 1 | 32 NOT USED | 57 HIGH EXTRACT MOTOR | 64 BRAKE | 89 PROGRAM OUT #17 |
| 1 COOLDOWN | 26 XFER CTRL NOT 1 | 33 NOT USED | 58 DRAIN SAVER | 65 I AM SPOTTING | 90 PROGRAM OUT #18 |
| 2 FLUSH VALVE | 27 TRANSFER CONTROL 2 | 34 NOT USED | 59 NOT USED | 66 NOT USED | 91 PROGRAM OUT #19 |
| 3 CHEM 4 | 28 XFER CTRL NOT 2 | 35 CHEM 4 | 60 AMP SAVER | 67 DC BRAKE | 92 NOT USED |
| 4 CHEM 1 | 29 CLEAN BUZZER | 36 DOOR LOCK | 61 NOT USED | 68 I AM SPOTTING | 93 NOT USED |
| 5 CHEM 3 | 30 WASH CLUTCH | 37 NOT USED | 62 NOT USED | 69 START SPOTTING | 94 NOT USED |
| 6 CHEM 2 | 31 SPRAY DOWN | 38 NOT USED | 63 NOT USED | 70 SOIL SPOTTED | 95 NOT USED |
| 7 CHEM 5 | | 39 START PULSE | | 71 CLEAN SPOTTED | |

NOT ALL INPUTS/OUTPUTS
USED FOR ALL MODELS

# MILTOUCH-EX™ CONTROLS
## MODELS WR2/3, SR2/3
## CONTROL BOARDS INPUTS/OUTPUTS

PELLERIN MILNOR CORPORATION

B2T2014009
2014243A

# IMPORTANT
## SETTING MILTOUCH-EX™ POWER SUPPLIES

⚠ ESPS and ESPS2 ARE DIFFERENT. TAKE CARE TO NOT MIX UP PART NUMBERS. IF WRONG POWER SUPPLY IS USED PERMANENT BOARD DAMAGE WILL OCCUR.

TO TEST POWER SUPPLIES OUTPUT

1. MAKE SURE MACHINE IS ON.
2. USING HIGH QUALITY DIGITAL VOLTMETER (FLUKE MODEL 77 OR EQUAL) MEASURE THE VOLTAGE ON ANY ONE OF BOARDS IN THE CARD CAGE *MTA#2 BETWEEN PINS 3 (+5V) AND PIN 4 (GND). THE VOLTAGE RANGE SHOULD BE 5.01-5.12VDC. SEE FIGURE 1.
3. MEASURE THE VOLTAGE AT BPB ON CONNECTOR J4 BETWEEN PIN 1 (+12V) AND PIN 2 (GND). THE VOLTAGE RANGE SHOULD BE 12.2-12.4VDC. SEE FIGURE 2

TO ADJUST POWER SUPPLY VOLTAGES

1. +5V,+12V &-12V IS PROVIDED BY PART NUMBER 08PSS3401T LABELED ESPS. POWER SUPPLY PART NUMBER 08PSS2401T PROVIDES THE +12V FOR THE PROCESSOR BD LABELED ESPS2.
2. LOCATE THE VOLTAGE ADJUSTMENT POTENTIOMETER. THE POTENTIOMETER WILL BE A SMALL BLUE COMPONENT. IT IS SOLDERED ON EACH POWER SUPPLY'S PRINTED CIRCUIT BOARD. THERE MAY HAVE A SPOT OF SILICONE ON ADJUSTMENT SCREW. SEE FIGURE 3.
3. USING A SMALL (POCKET TYPE) SCREW DRIVER REMOVE THE SILICONE AND TURN THE POTENTIOMETER TURNING CLOCKWISE TO RAISE THE VOLTAGE AND COUNTER-CLOCKWISE TO LOWER.
4. RE-APPLY SPOT OF ELECTRONIC GRADE SILICONE ON ADJUSTMENT SCREW TO FIX IN PLACE. RE-TEST TO VERIFY +5VDC ON ESPS AND +12VDC ON ESPS2 ARE WITHIN CORRECT VOLTAGE RANGES.

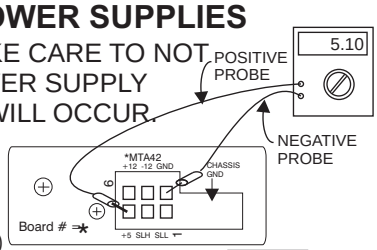


FIG 1.

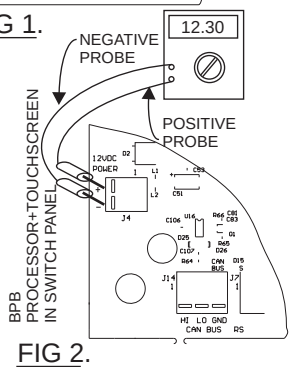


FIG 2.

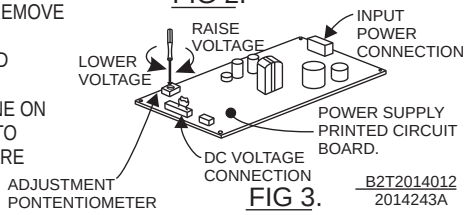


FIG 3.

B2T2014012
2014243A

# W6W5SZTG1

## MICRO 6 SYSTEMS
## SCHEMATIC: MACHINE TAGS
PELLERIN MILNOR CORPORATION

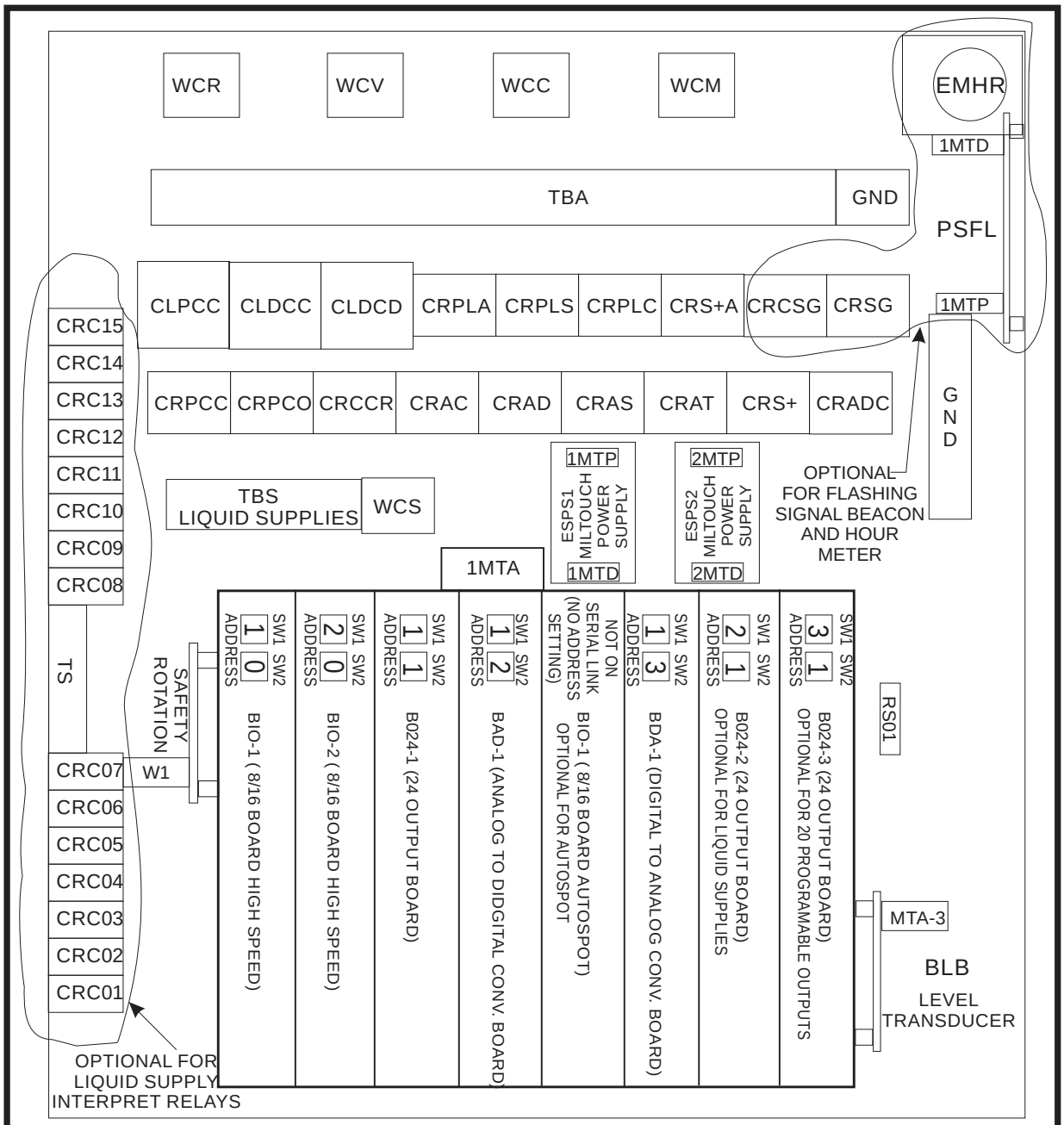


# MILTOUCH-EX™ CONTROLS
# 42044 SINGLE MOTOR STAPHGUARD LOW VOLTAGE CONTROL BOX

PELLERIN MILNOR CORPORATION

B2T2014010
2018364A

W6W5SZTG2
2019094B

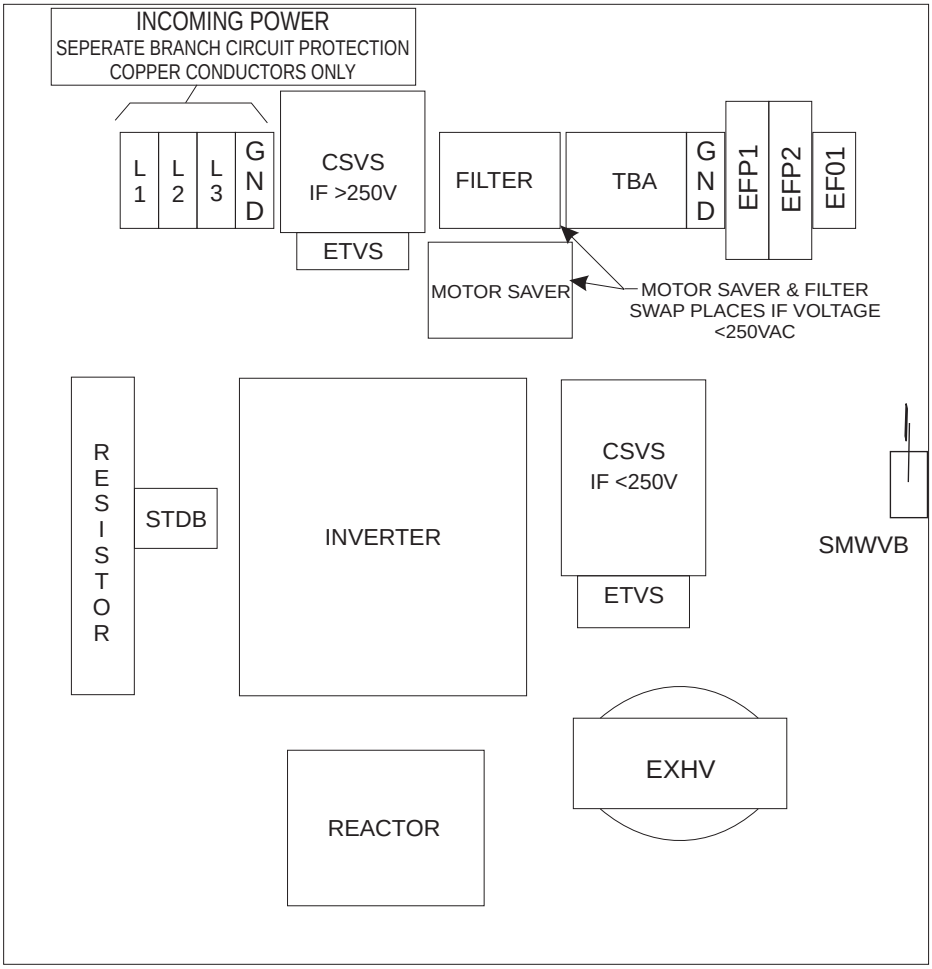


MILTOUCH-EX SYSTEMS
42044 SINGLE MOTOR WR2/SR2
HIGH VOLTAGE CONTROL BOX

PELLERIN MILNOR CORPORATION

B2T2015008
2015335A

# W6W5SZTG2

MICRO 6 SYSTEMS
SCHEMATIC: MACHINE TAGS
PELLERIN MILNOR CORPORATION

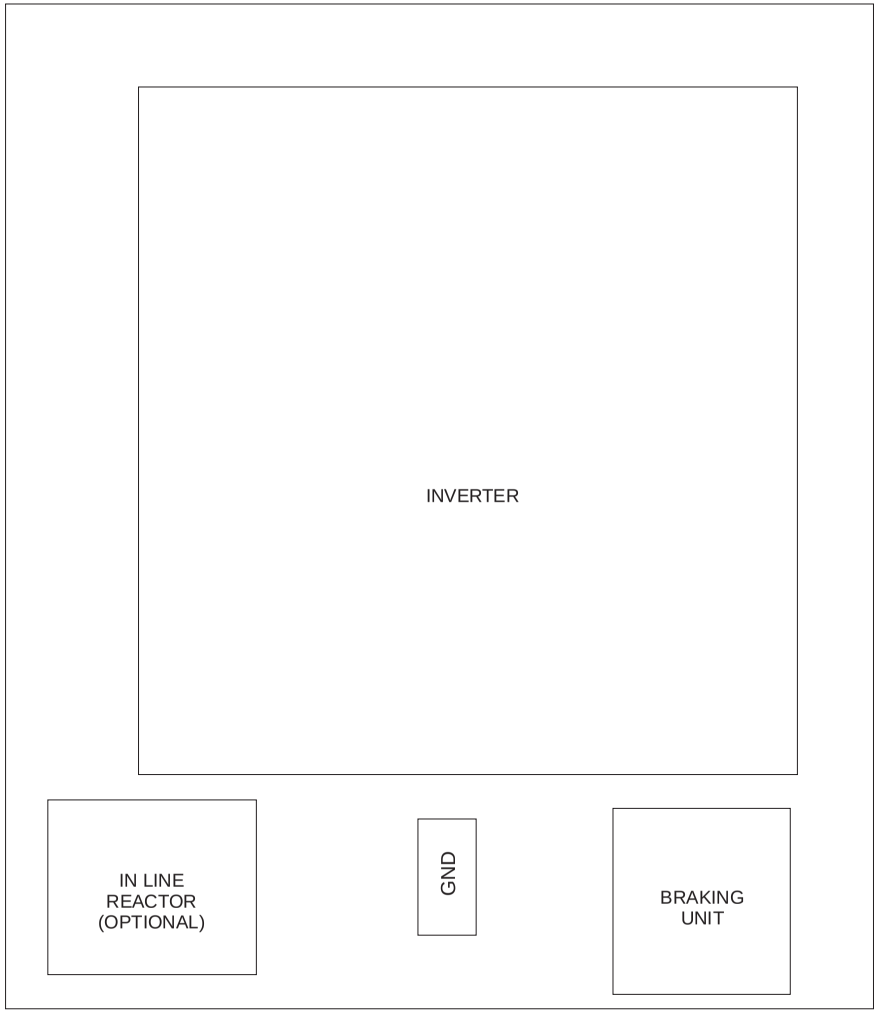


# MILTOUCH-EX™ CONTROLS
## 60044WR2/3, SR2/3
## INVERTER CONTROL BOX

B2T2014017
2014243A

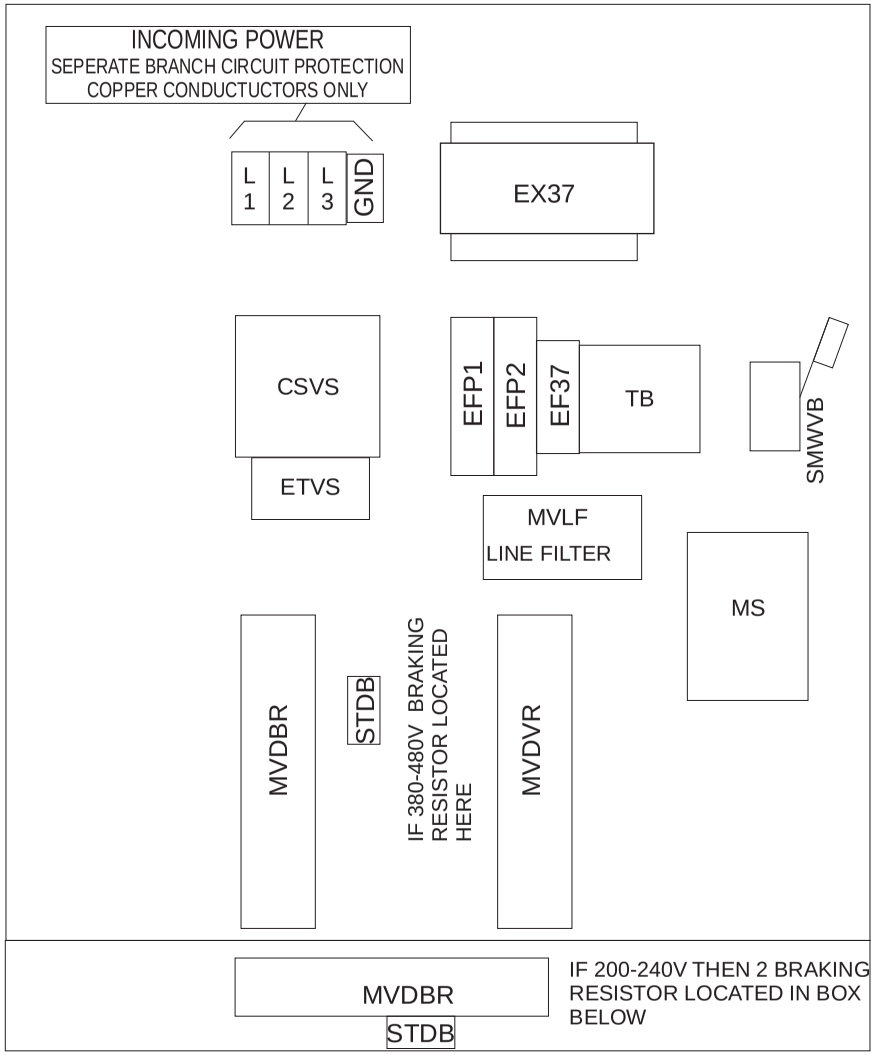


# MILTOUCH-EX™ SYSTEMS
## 60044WR2/3, SR2/3
## HIGH VOLTAGE BOX

PELLERIN MILNOR CORPORATION

B2T2014018
2016453A

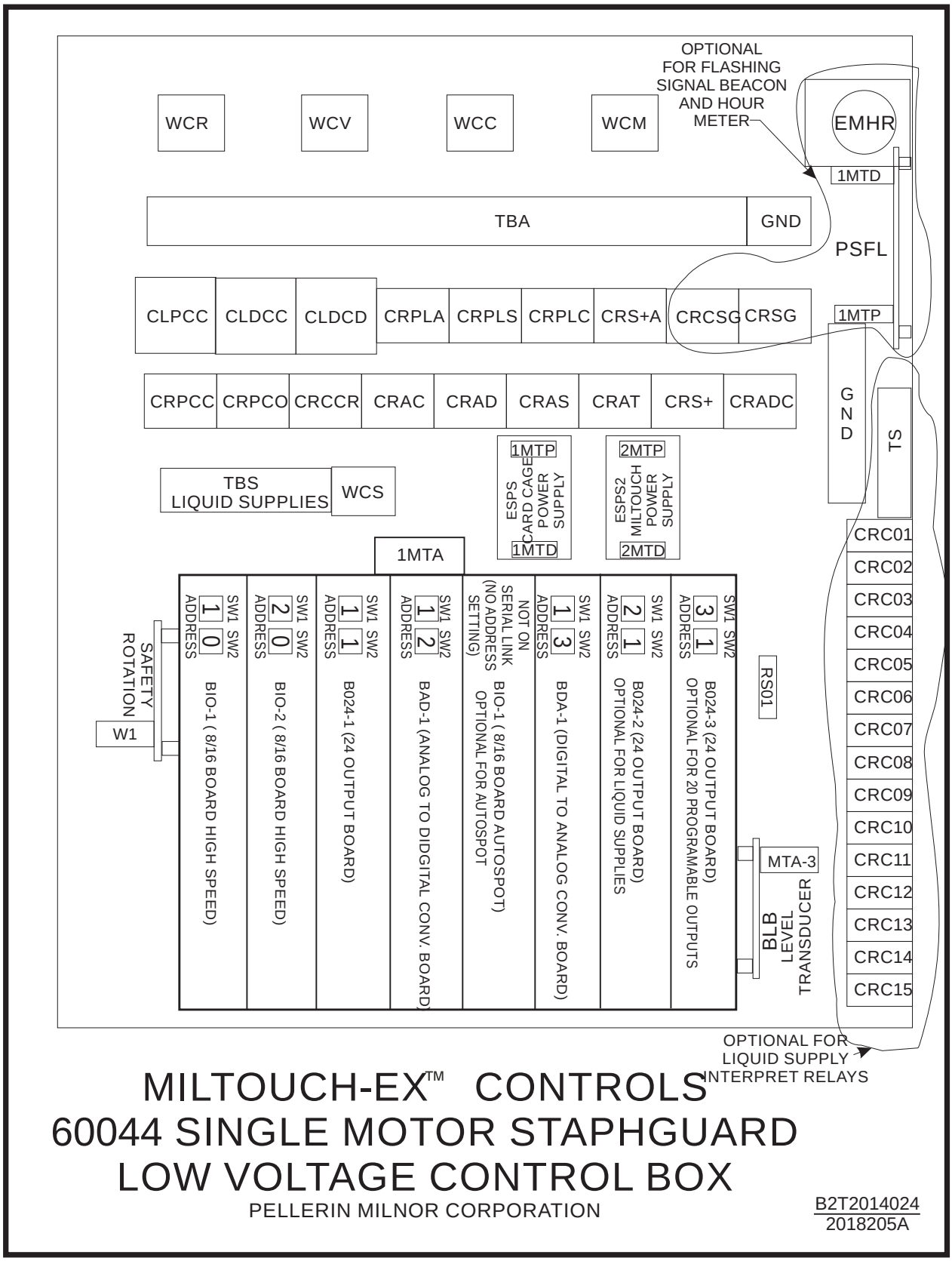


# MILTOUCH-EX™ CONTROLS
## 60044 SINGLE MOTOR STAPHGUARD LOW VOLTAGE CONTROL BOX

PELLERIN MILNOR CORPORATION

B2T2014024
2018205A

# W6W5SZTG3
## MICRO 6 SYSTEMS
## SCHEMATIC:60044 MACHINE TAGS
PELLERIN MILNOR CORPORATION

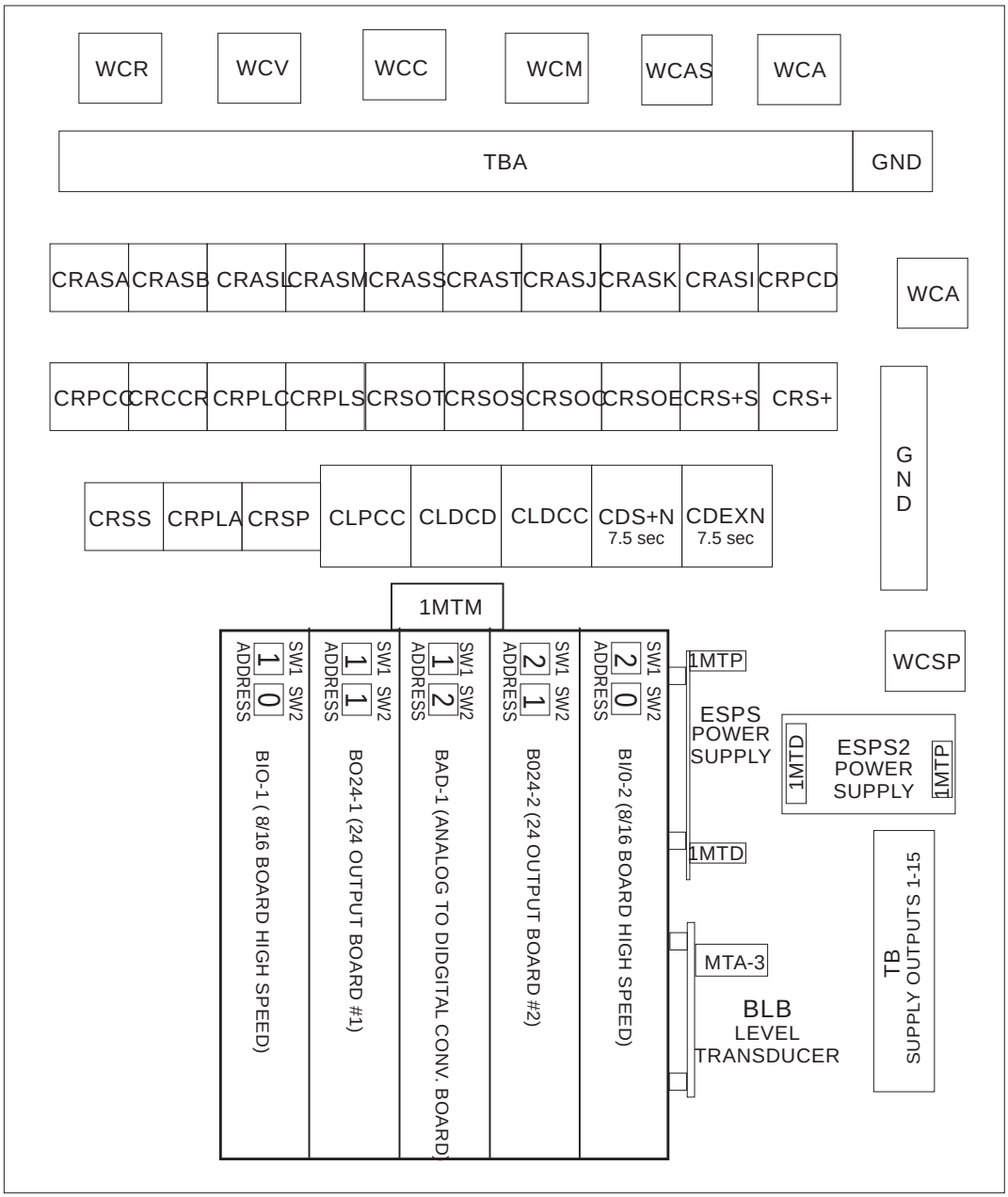


# 72044SR2/3 MILTOUCH-EX CONTROLS
# LOW VOLTAGE CONTROL BOX

PELLERIN MILNOR CORPORATION

B2T2015006
2019174A

W6W5SZTG4
2019174B

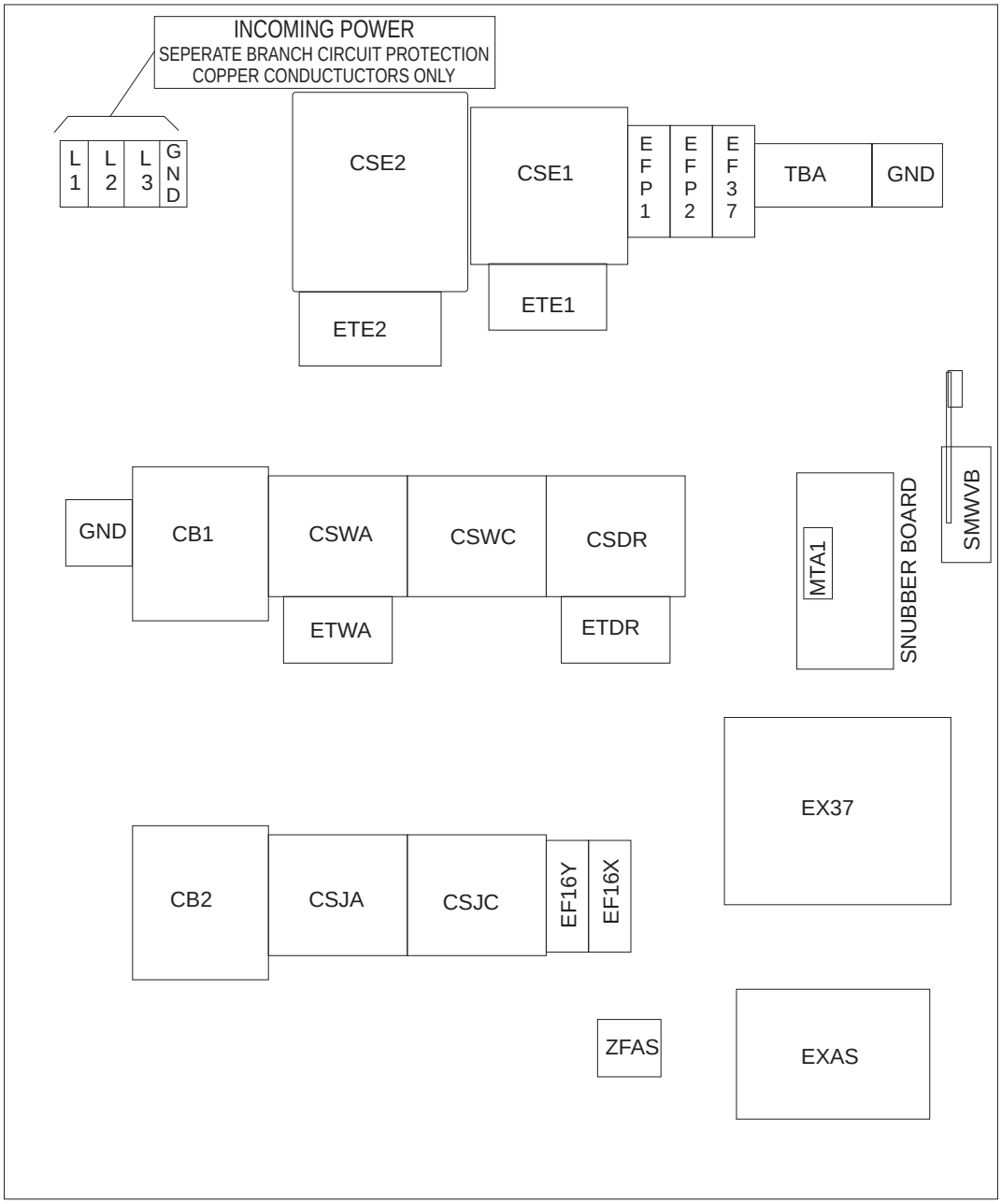


MILTOUCH-EX CONTROLS
7244WR2/3-7244SR2/3
HIGH VOLTAGE CONTROL BOX
PELLERIN MILNOR CORPORATION

B2T2007020
2016075A

**W6W5SZTG4**

MICRO 6 SYSTEMS
SCHEMATIC: MACHINE TAGS
PELLERIN MILNOR CORPORATION

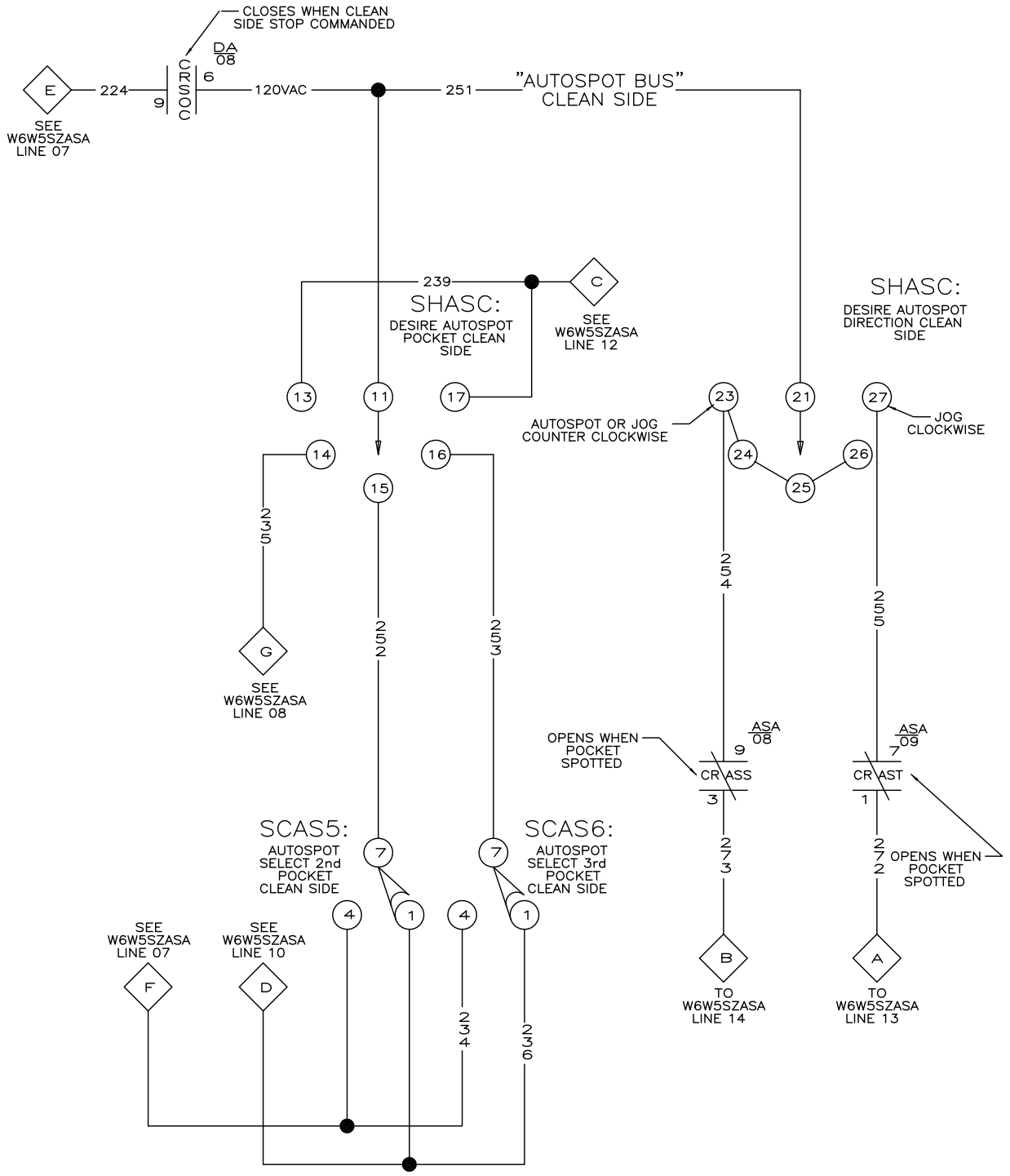


LITHO IN U.S.A.

00 01 02 03 04 05 06 07 08 09

W6W5SZACA
2022475B

# W6W5SZACA

MILTOUCH-EX™ CONTROLS
72044 SP2/3 ONLY
SCHEMATIC: AUTOSPOT CLEAN SIDE
110V1P50HZ/120V1P60HZ
PELLERIN MILNOR CORPORATION




10 11 12 13 14 15 16 17 18

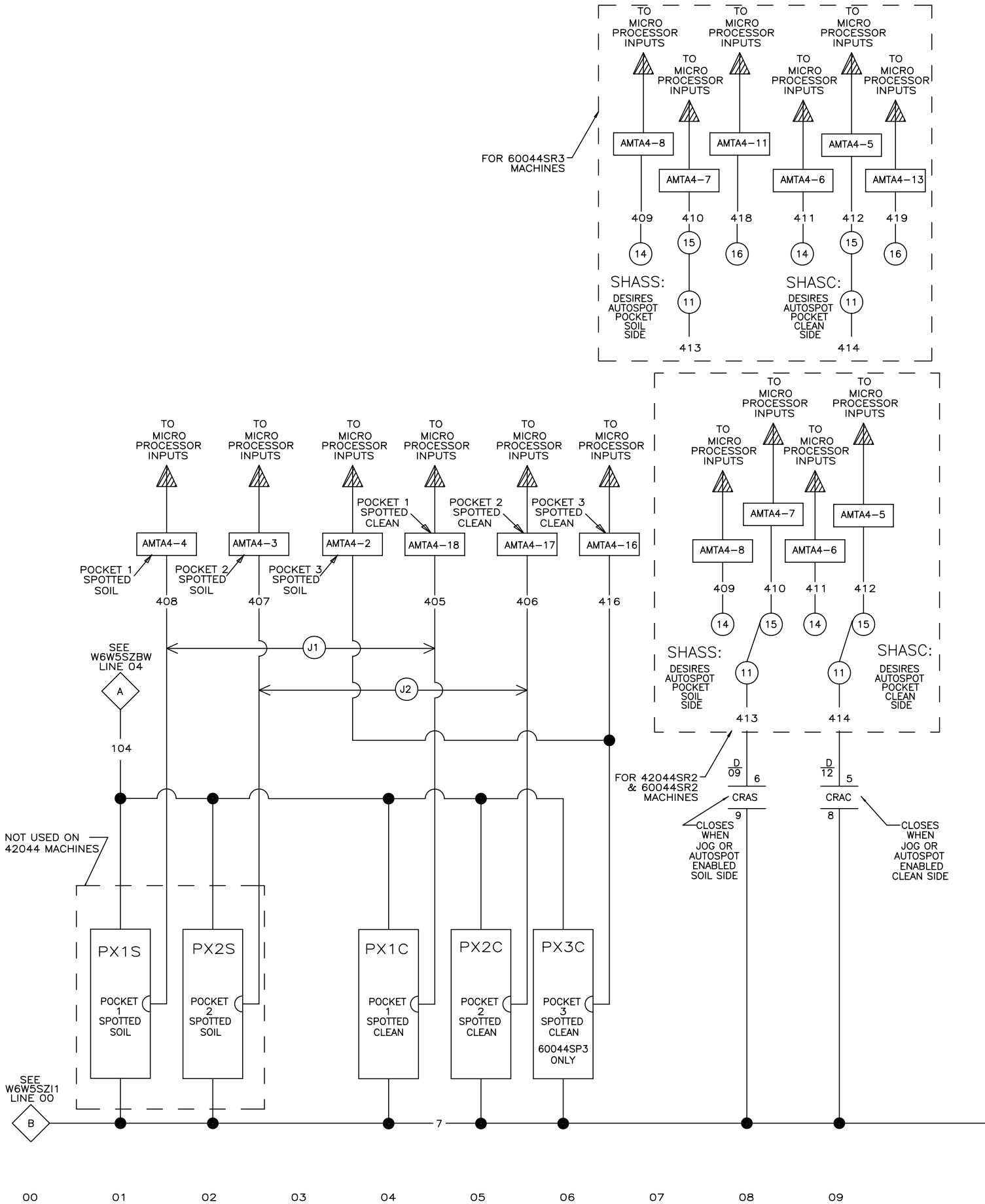


W6W5SZAS
2024414B

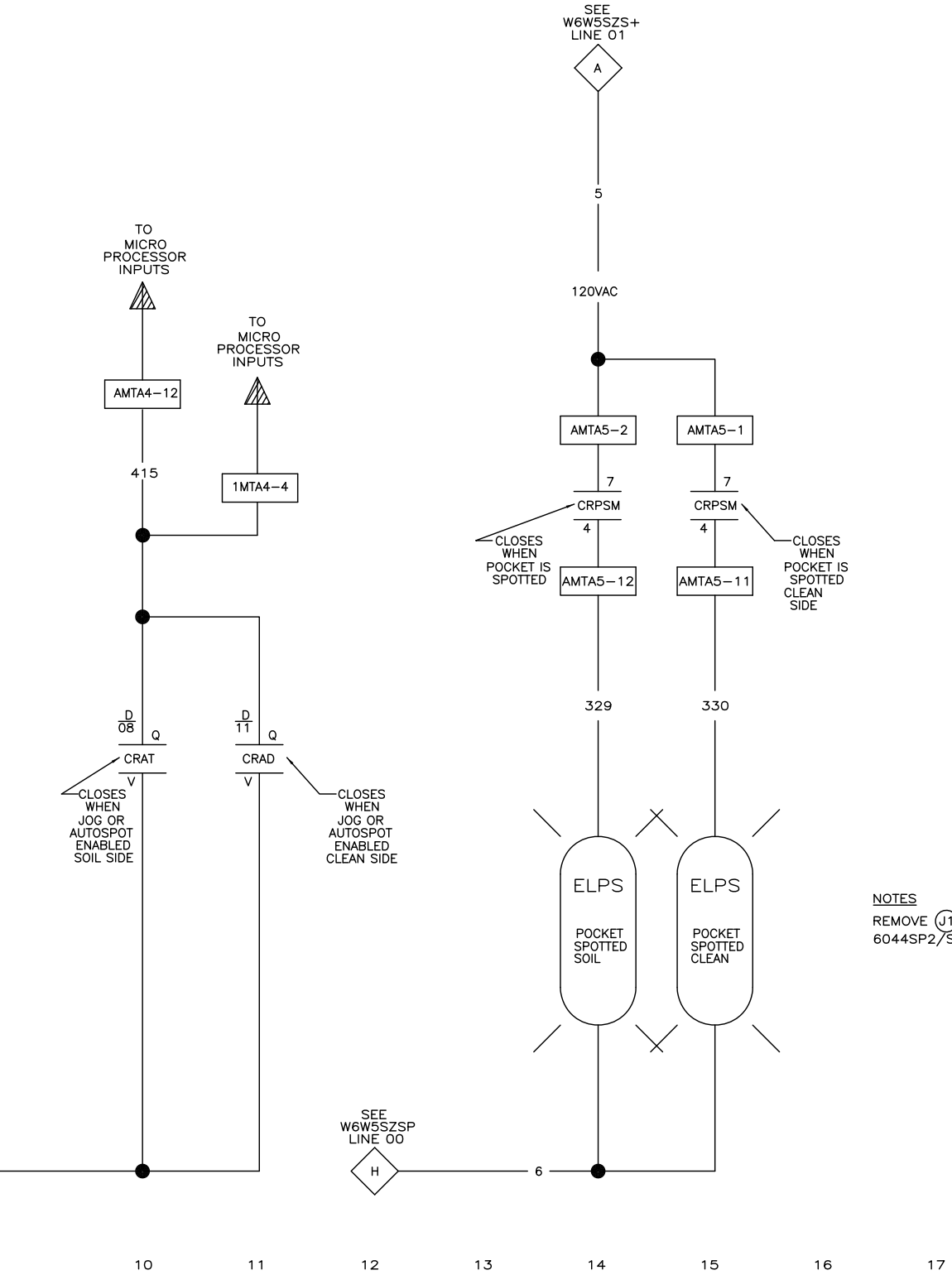


# W6W5SZAS
## MILTOUCH–EX™ CONTROLS
## SCHEMATIC: AUTOSPOT
110V1P50HZ/120V1P60HZ

PELLERIN MILNOR CORPORATION

NOTES

REMOVE (J1) AND (J2) FOR
6044SP2/SR2 AND 6044SP3/SR3 MODELS

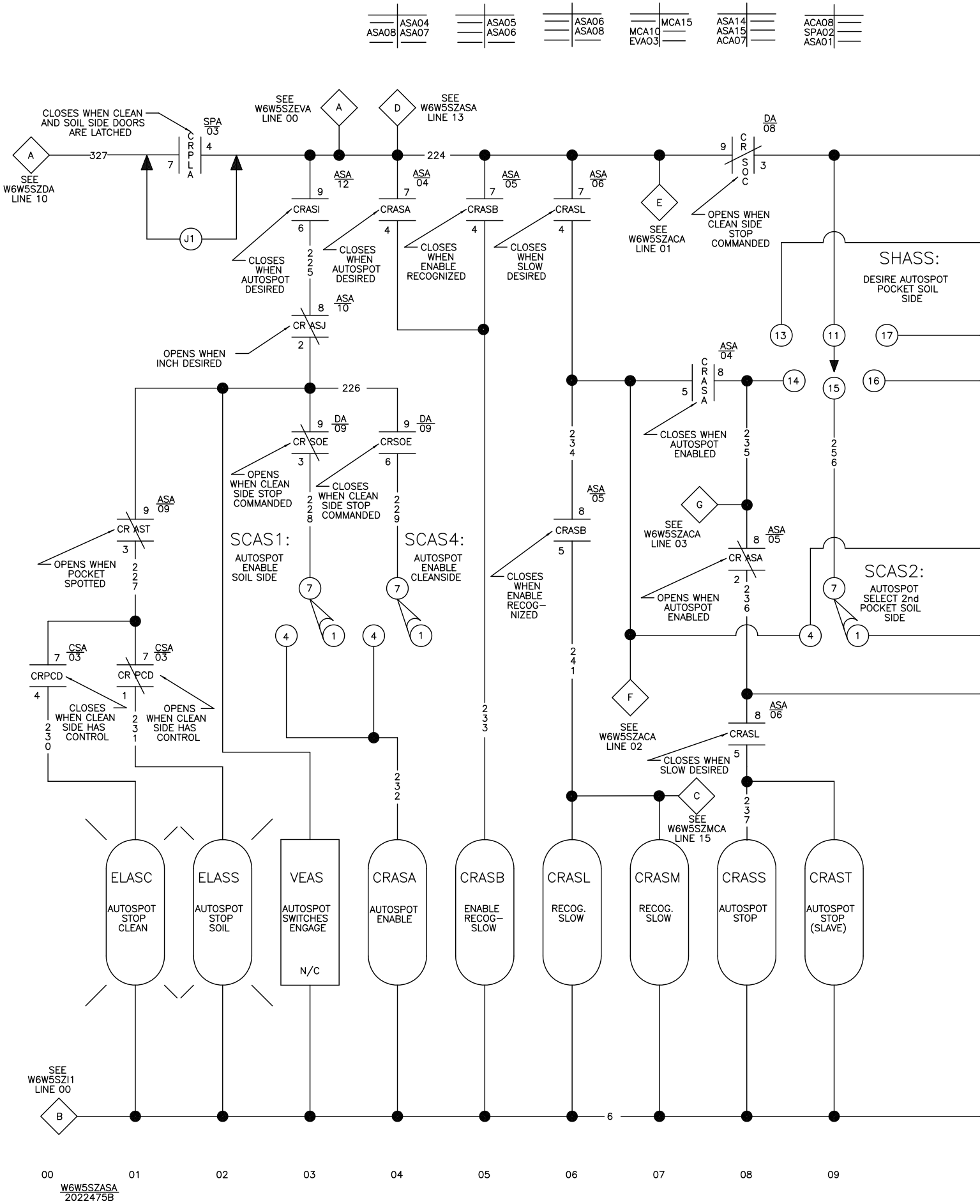
ASA04 ASA08 ASA07
ASA05 ASA06
ASA06 ASA08
MCA15 MCA10 EVA03
ASA14 ASA15 ACA07
ACA08 SPA02 ASA01
CLOSES WHEN CLEAN AND SOIL SIDE DOORS ARE LATCHED
SPA 03
SEE W6W5SZDA LINE 10
SEE W6W5SZEVA LINE 00
SEE W6W5SZASA LINE 13
DA 08
CRASI
CRASA
CRASB
CRASL
CLOSES WHEN AUTOSPOT DESIRED
CLOSES WHEN AUTOSPOT DESIRED
CLOSES WHEN ENABLE RECOGNIZED
CLOSES WHEN SLOW DESIRED
SEE W6W5SZACA LINE 01
OPENS WHEN CLEAN SIDE STOP COMMANDED
SHASS:
DESIRE AUTOSPOT POCKET SOIL SIDE
CR ASJ
OPENS WHEN INCH DESIRED
CR SOE
CRSOE
OPENS WHEN CLEAN SIDE STOP COMMANDED
CLOSES WHEN CLEAN SIDE STOP COMMANDED
CRASA
CLOSES WHEN AUTOSPOT ENABLED
CR AST
OPENS WHEN POCKET SPOTTED
SCAS1:
AUTOSPOT ENABLE SOIL SIDE
SCAS4:
AUTOSPOT ENABLE CLEANSIDE
CRASB
CLOSES WHEN ENABLE RECOG-NIZED
SEE W6W5SZACA LINE 03
CR ASA
OPENS WHEN AUTOSPOT ENABLED
SCAS2:
AUTOSPOT SELECT 2nd POCKET SOIL SIDE
CRPCD
CR PCD
CLOSES WHEN CLEAN SIDE HAS CONTROL
OPENS WHEN CLEAN SIDE HAS CONTROL
SEE W6W5SZACA LINE 02
CRASL
CLOSES WHEN SLOW DESIRED
SEE W6W5SZMCA LINE 15
ELASC AUTOSPOT STOP CLEAN
ELASS AUTOSPOT STOP SOIL
VEAS AUTOSPOT SWITCHES ENGAGE N/C
CRASA AUTOSPOT ENABLE
CRASB ENABLE RECOG-SLOW
CRASL RECOG. SLOW
CRASM RECOG. SLOW
CRASS AUTOSPOT STOP
CRAST AUTOSPOT STOP (SLAVE)
SEE W6W5SZI1 LINE 00
00 01 02 03 04 05 06 07 08 09
W6W5SZASA 2022475B

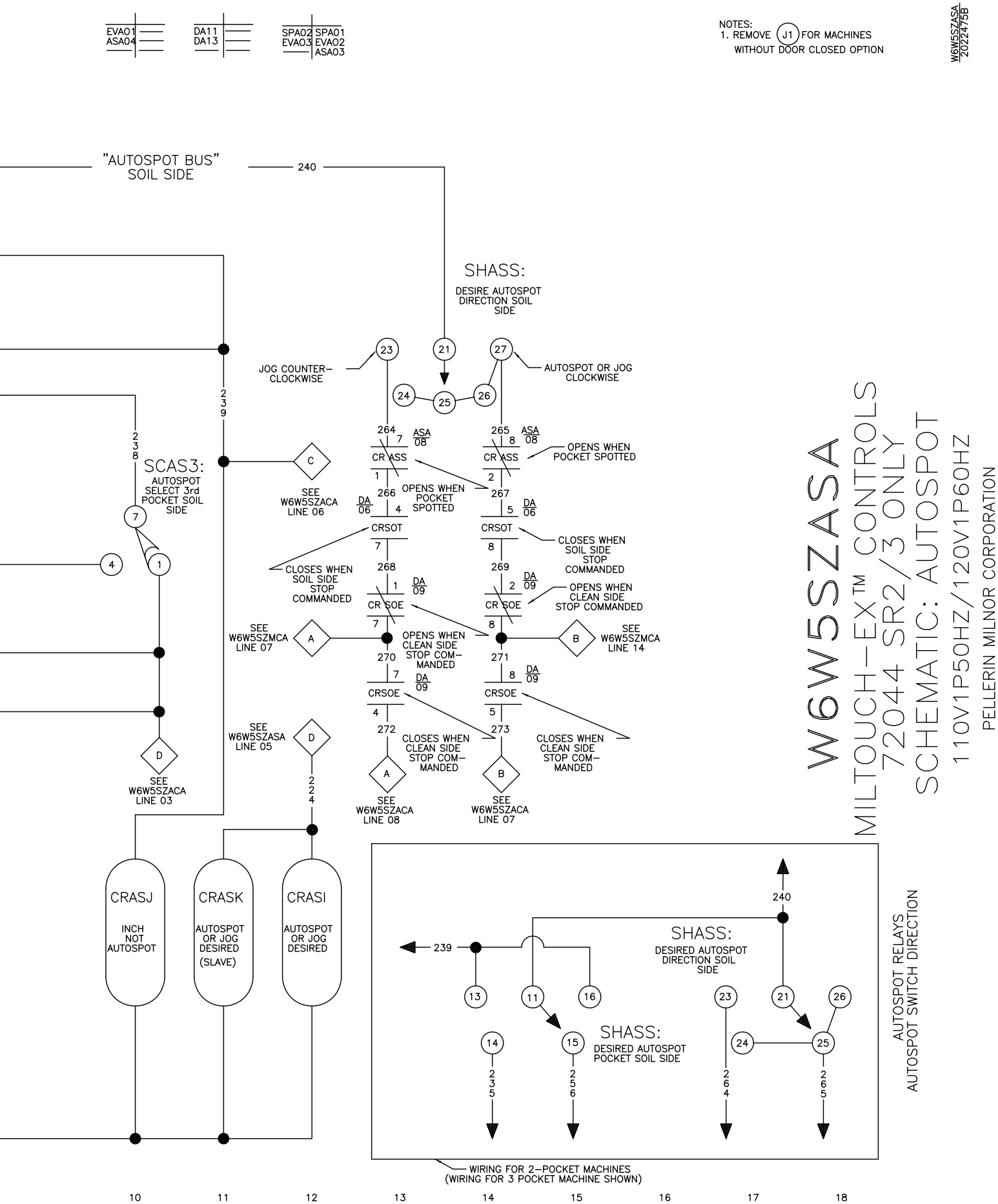
EVA01
ASA04
DA11
DA13
SPA02
EVA03
SPA01
EVA02
ASA03
NOTES:
1. REMOVE J1 FOR MACHINES WITHOUT DOOR CLOSED OPTION
W6W5SZASA
2022475B
"AUTOSPOT BUS"
SOIL SIDE
240
SHASS:
DESIRE AUTOSPOT DIRECTION SOIL SIDE
JOG COUNTER-CLOCKWISE
AUTOSPOT OR JOG CLOCKWISE
239
238
SCAS3:
AUTOSPOT SELECT 3rd POCKET SOIL SIDE
SEE W6W5SZACA LINE 06
264
265
ASA 08
CR ASS
OPENS WHEN POCKET SPOTTED
266
267
DA 06
CRSOT
CLOSES WHEN SOIL SIDE STOP COMMANDED
268
269
DA 09
CR SOE
OPENS WHEN CLEAN SIDE STOP COMMANDED
SEE W6W5SZMCA LINE 07
SEE W6W5SZMCA LINE 14
270
271
CRSOE
CLOSES WHEN CLEAN SIDE STOP COMMANDED
272
273
SEE W6W5SZASA LINE 05
SEE W6W5SZACA LINE 03
SEE W6W5SZACA LINE 08
SEE W6W5SZACA LINE 07
224
CRASJ
INCH NOT AUTOSPOT
CRASK
AUTOSPOT OR JOG DESIRED (SLAVE)
CRASI
AUTOSPOT OR JOG DESIRED
SHASS:
DESIRED AUTOSPOT DIRECTION SOIL SIDE
SHASS:
DESIRED AUTOSPOT POCKET SOIL SIDE
235
256
264
265
WIRING FOR 2-POCKET MACHINES
(WIRING FOR 3 POCKET MACHINE SHOWN)
10
11
12
13
14
15
16
17
18
W6W5SZASA
MILTOUCH-EX™ CONTROLS
72044 SR2/3 ONLY
SCHEMATIC: AUTOSPOT
110V1P50HZ/120V1P60HZ
PELLERIN MILNOR CORPORATION
AUTOSPOT RELAYS
AUTOSPOT SWITCH DIRECTION
W6W5SZASA
2022475B

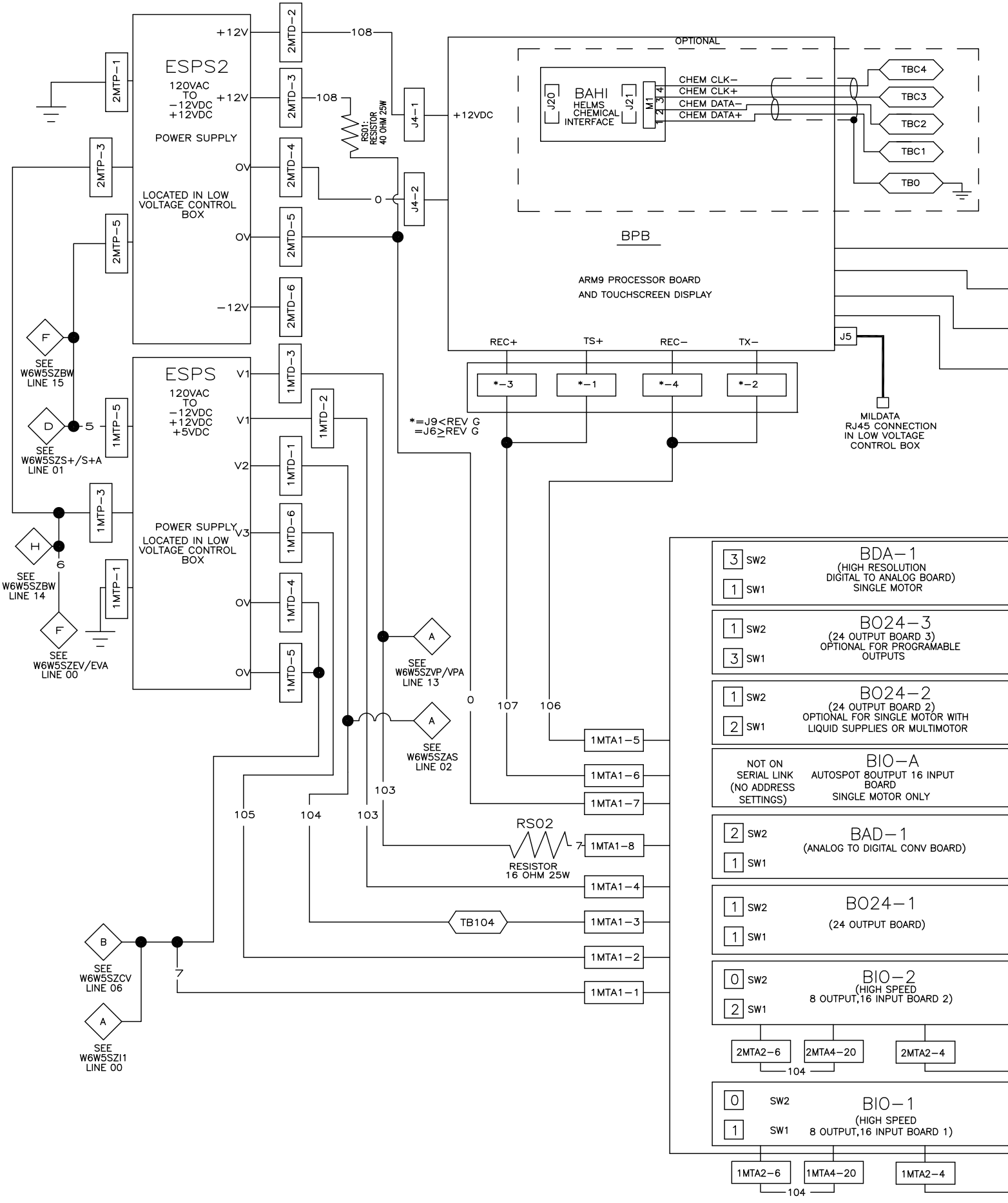


W6W5SZBW
2021045B

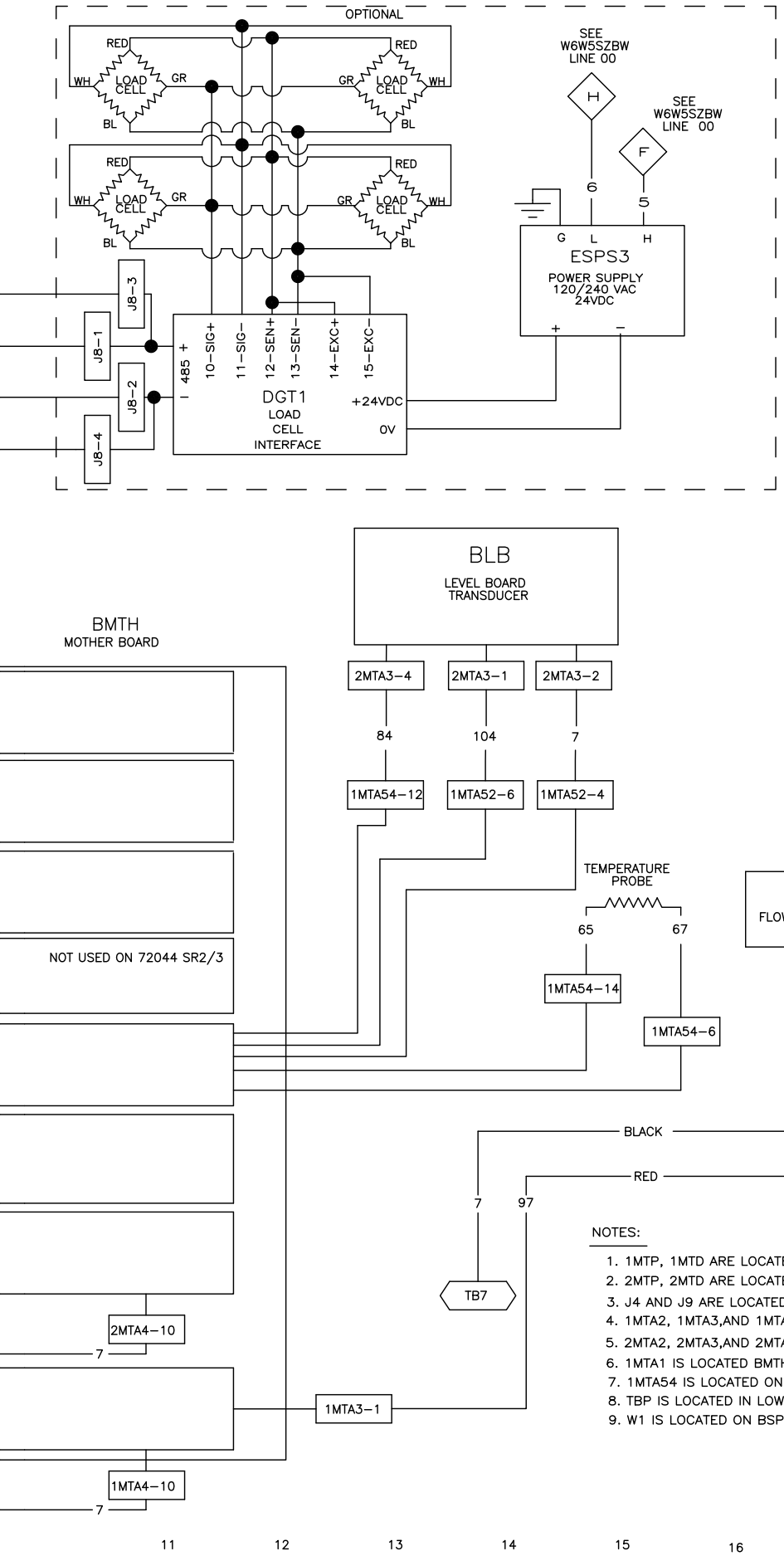


# W6W5SZBW
## MILTOUCH−EX™ CONTROLS
## SERIAL CONTROLS
## SCHEMATIC: BOARD TO BOARD WIRING

PELLERIN MILNOR CORPORATION

NOTES:

1. 1MTP, 1MTD ARE LOCATED ON ESPS (POWER SUPPLY).
2. 2MTP, 2MTD ARE LOCATED ON ESPS2 (POWER SUPPLY).
3. J4 AND J9 ARE LOCATED ON BPB (ARM 9 PROCESSOR BOARD)
4. 1MTA2, 1MTA3,AND 1MTA4 ARE LOCATED ON BIO−1(HIGH SPED 8 OUTPUT−16INPUT BOARD).
5. 2MTA2, 2MTA3,AND 2MTA4 ARE LOCATED ON BIO−2(HIGH SPED 8 OUTPUT−16INPUT BOARD).
6. 1MTA1 IS LOCATED BMTH (MOTHER BOARD).
7. 1MTA54 IS LOCATED ON BAD−1 (ANALOG TO DIGITAL BOARD).
8. TBP IS LOCATED IN LOW VOLTAGE CONTROL BOX.
9. W1 IS LOCATED ON BSP (SPEED SENSING BOARD).

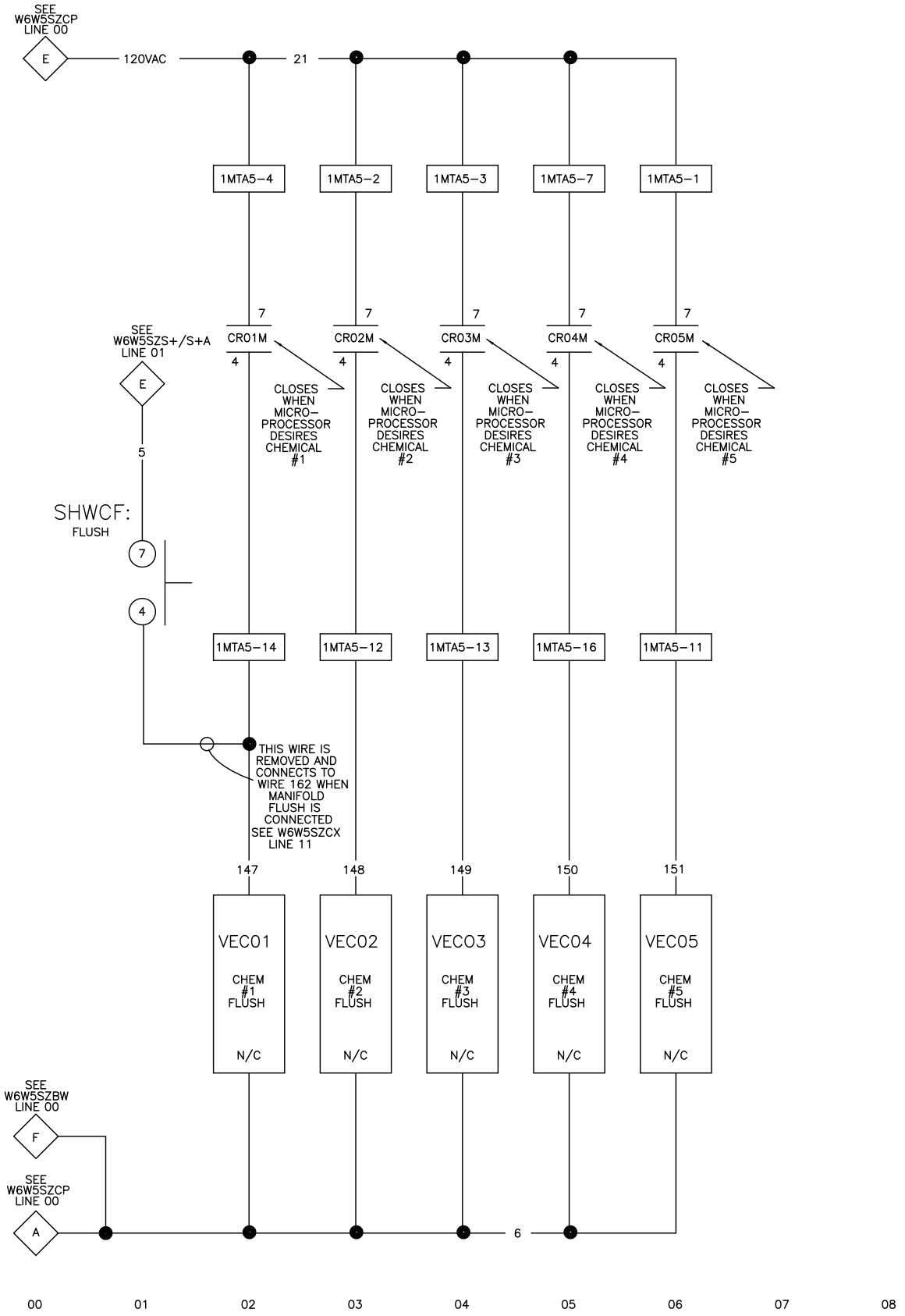


W6W5SZCF
2024214B

# W6W5SZCF

## MILTOUCH–EX ™ CONTROLS
## SCHEMATIC: FLUSHING SUPPLIES

110V1P50HZ/120V1P60HZ

W6W5SZCF
2024214B



W6W5SZCF
2024214B

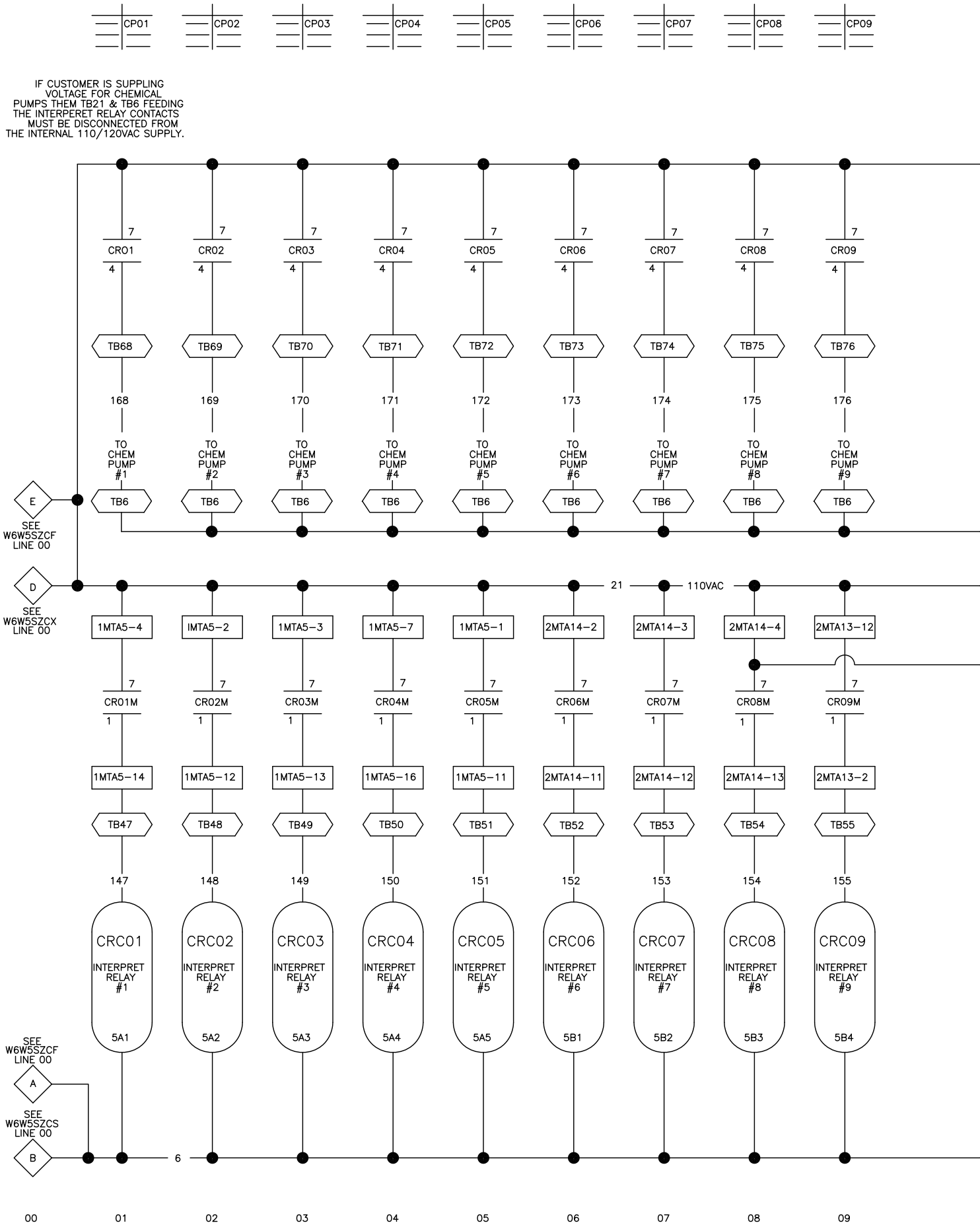


W6W5SZCP
2014152B

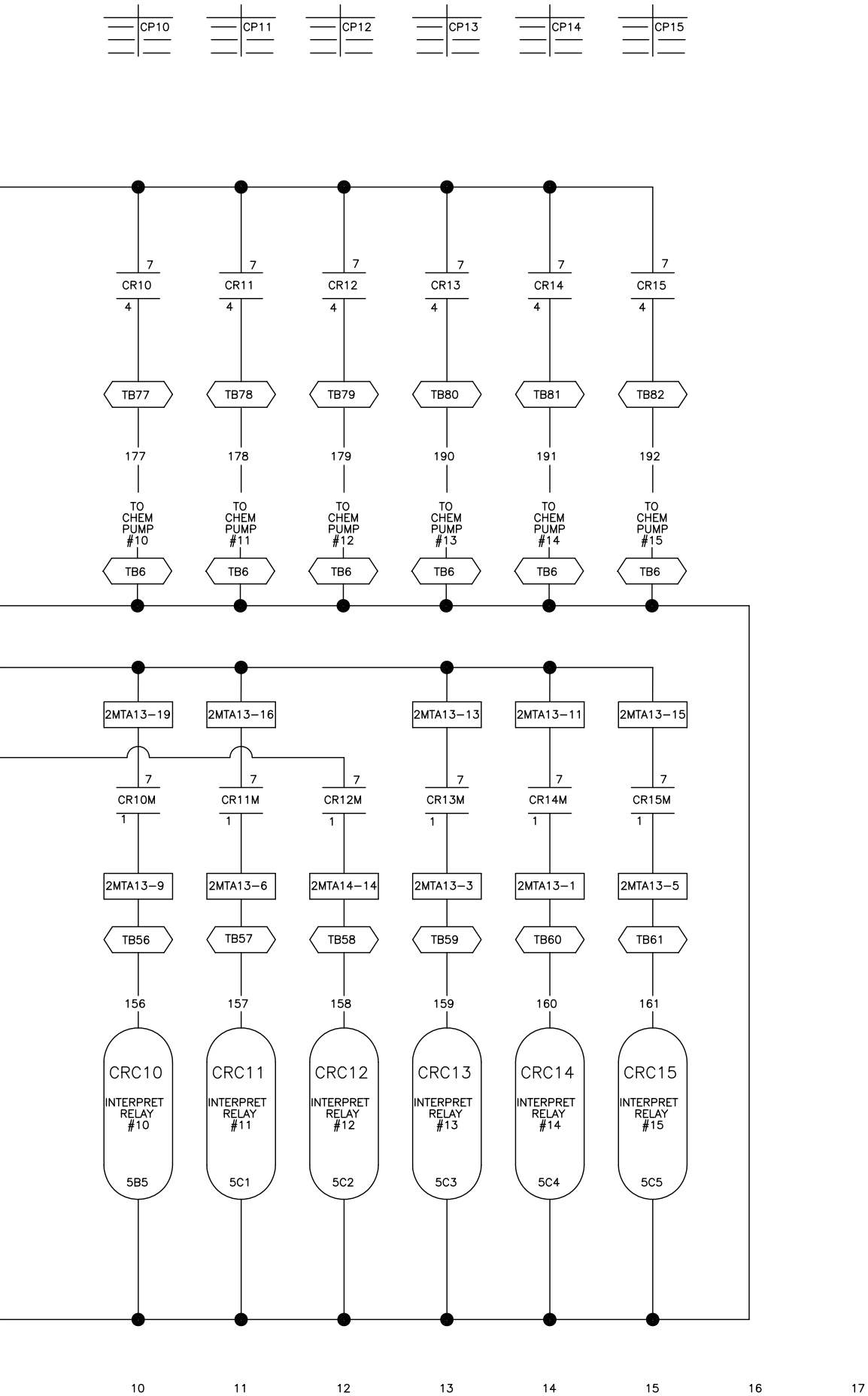


# W6W5SZCP

## MILTOUCH–EX™ CONTROLS

## SCHEMATIC: LIQUID SUPPLY–INTERPRET RELAYS

110V1P50HZ/120V1P60HZ

PELLERIN MILNOR CORPORATION

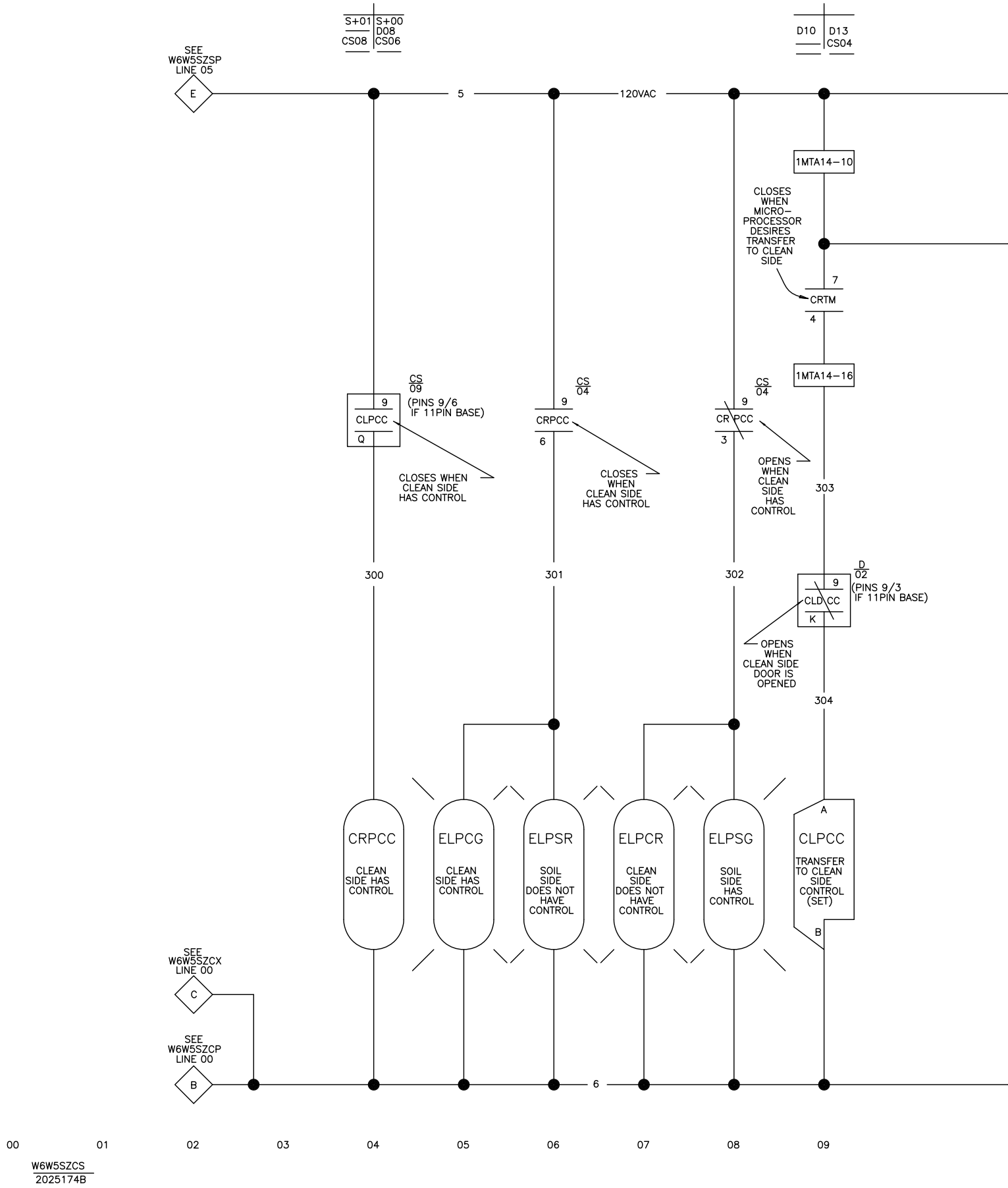
S+01 S+00
D08
CS08 CS06
D10 D13
CS04
SEE W6W5SZSP LINE 05
E
5
120VAC
1MTA14–10
CLOSES WHEN MICRO–PROCESSOR DESIRES TRANSFER TO CLEAN SIDE
7
CRTM
4
1MTA14–16
CS 09
9
CLPCC
Q
(PINS 9/6 IF 11PIN BASE)
CLOSES WHEN CLEAN SIDE HAS CONTROL
CS 04
9
CRPCC
6
CLOSES WHEN CLEAN SIDE HAS CONTROL
CS 04
9
CR PCC
3
OPENS WHEN CLEAN SIDE HAS CONTROL
303
300
301
302
D 02
9
CLD CC
K
(PINS 9/3 IF 11PIN BASE)
OPENS WHEN CLEAN SIDE DOOR IS OPENED
304
CRPCC
CLEAN SIDE HAS CONTROL
ELPCG
CLEAN SIDE HAS CONTROL
ELPSR
SOIL SIDE DOES NOT HAVE CONTROL
ELPCR
CLEAN SIDE DOES NOT HAVE CONTROL
ELPSG
SOIL SIDE HAS CONTROL
A
CLPCC
TRANSFER TO CLEAN SIDE CONTROL (SET)
B
SEE W6W5SZCX LINE 00
C
SEE W6W5SZCP LINE 00
B
6
00
01
02
03
04
05
06
07
08
09
W6W5SZCS
2025174B

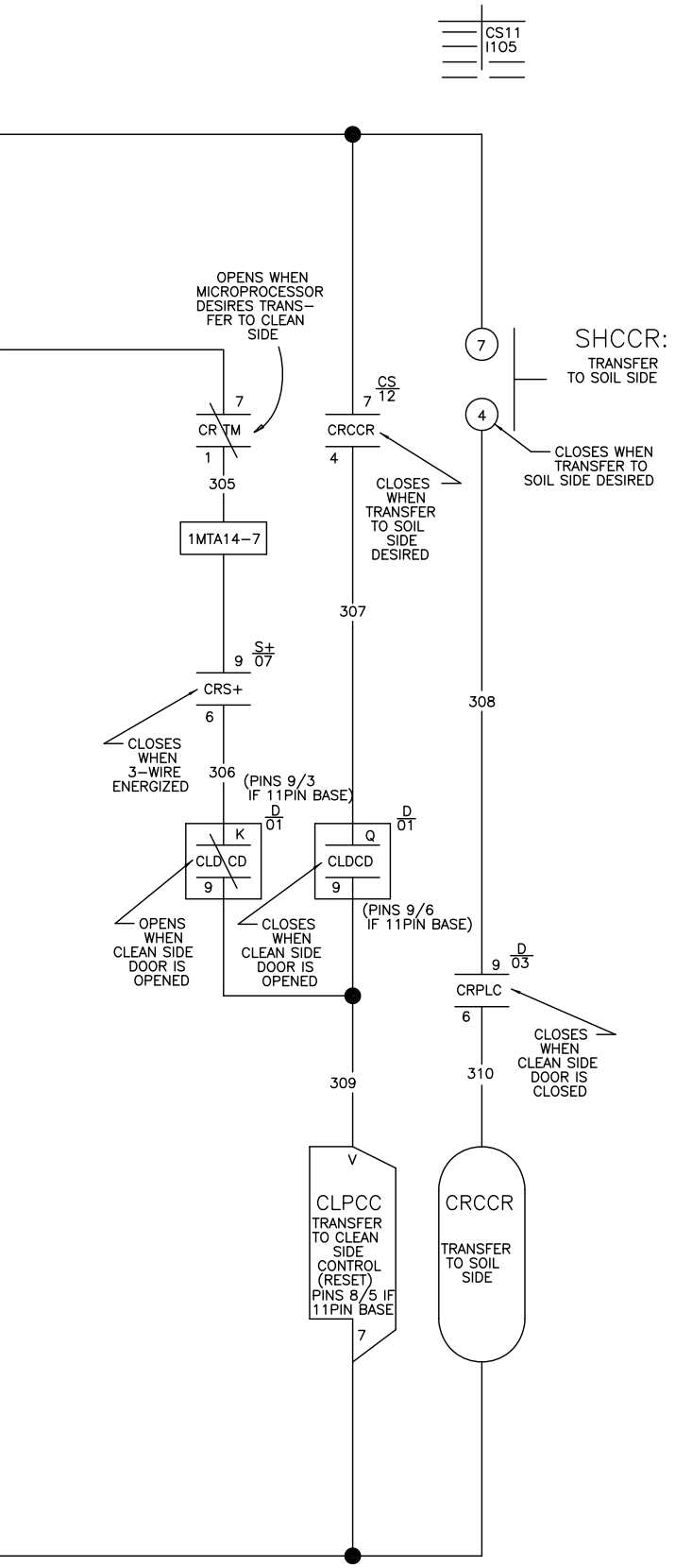


NOTES:

1. RELAYS CRPCD, AND CRCCR ARE LOCATED IN AUTOSPOT CONTROL BOX.
2. 1MTA13, 1MTA14 ARE LOCATED ON BO16-1 (16 OUTPUT BOARD).

# W6W5SZCS

## MILTOUCH-EX™ CONTROLS

## SCHEMATIC: CLEAN & SOIL SIDE CONTROLS

110V1P50HZ/120V1P60HZ

PELLERIN MILNOR CORPORATION

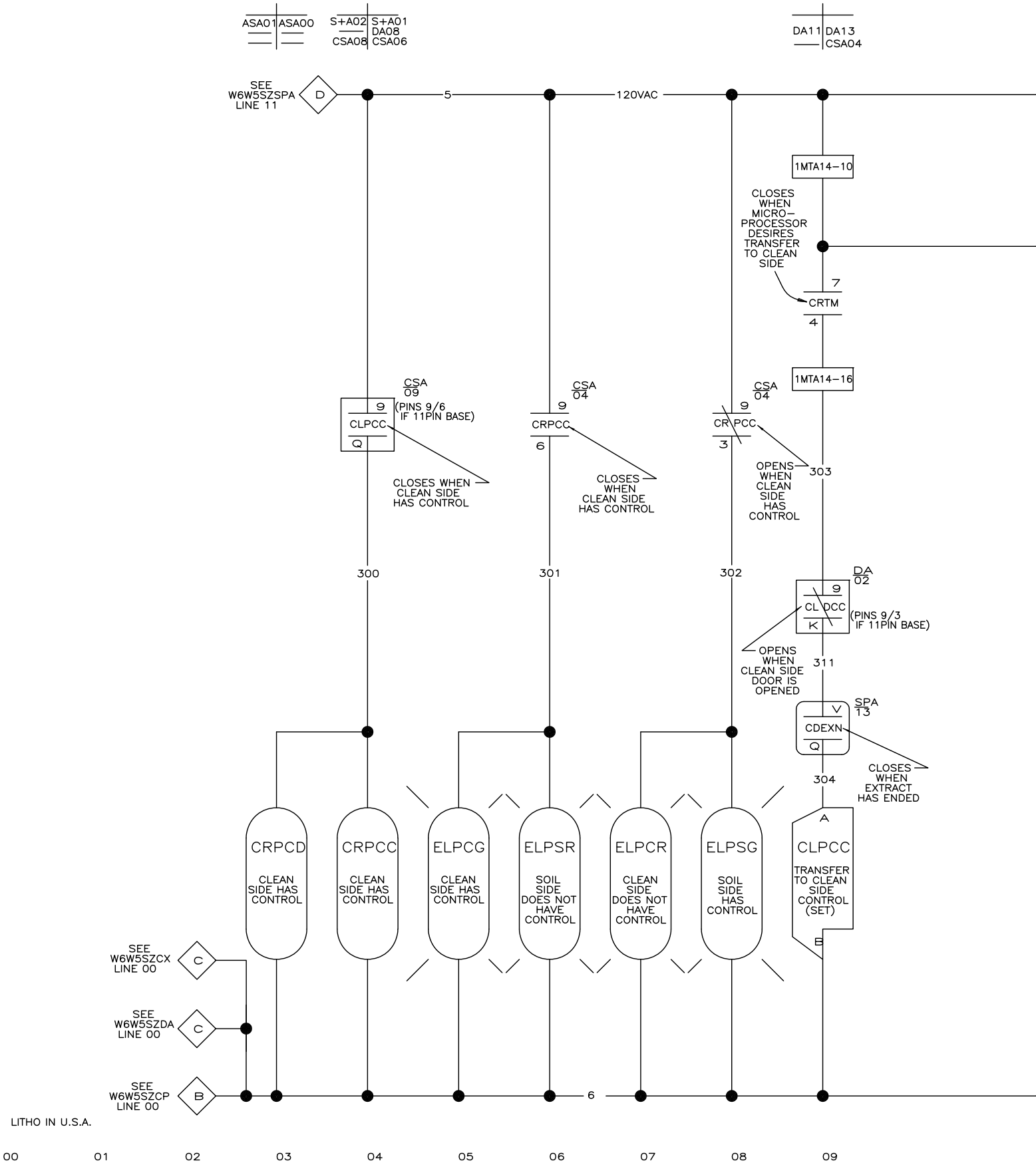


W6W5SZCSA
2025174B

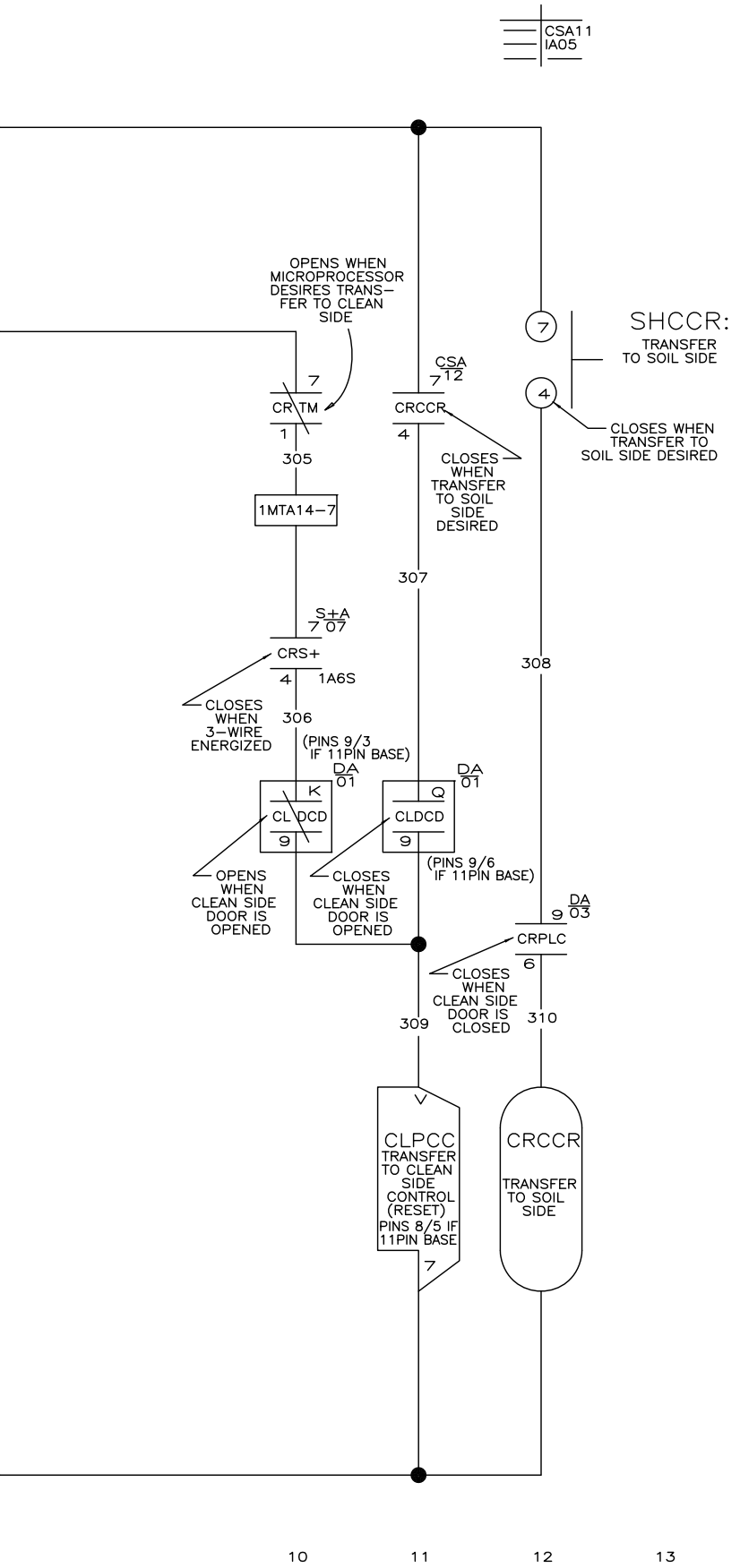


NOTES:

1. 1MTA14 IS LOCATED ON BO24-1 (24 OUTPUT BOARD).

# W6W5SZCSA

## MILTOUCH-EX™ CONTROLS

## SCHEMATIC: CLEAN & SOIL SIDE CONTROLS

110V1P50HZ/120V1P60HZ

PELLERIN MILNOR CORPORATION

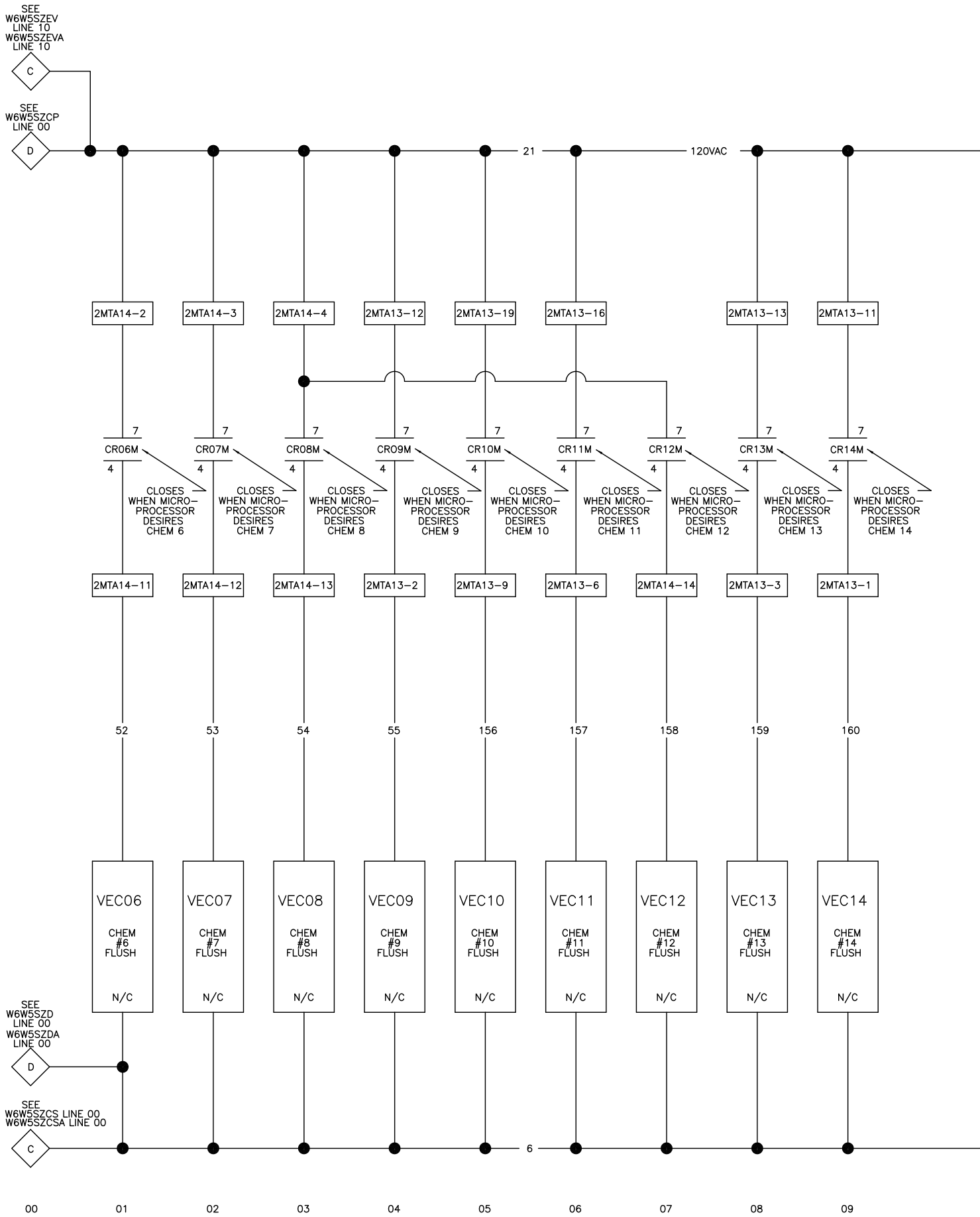


W6W5SZCX
2016374B

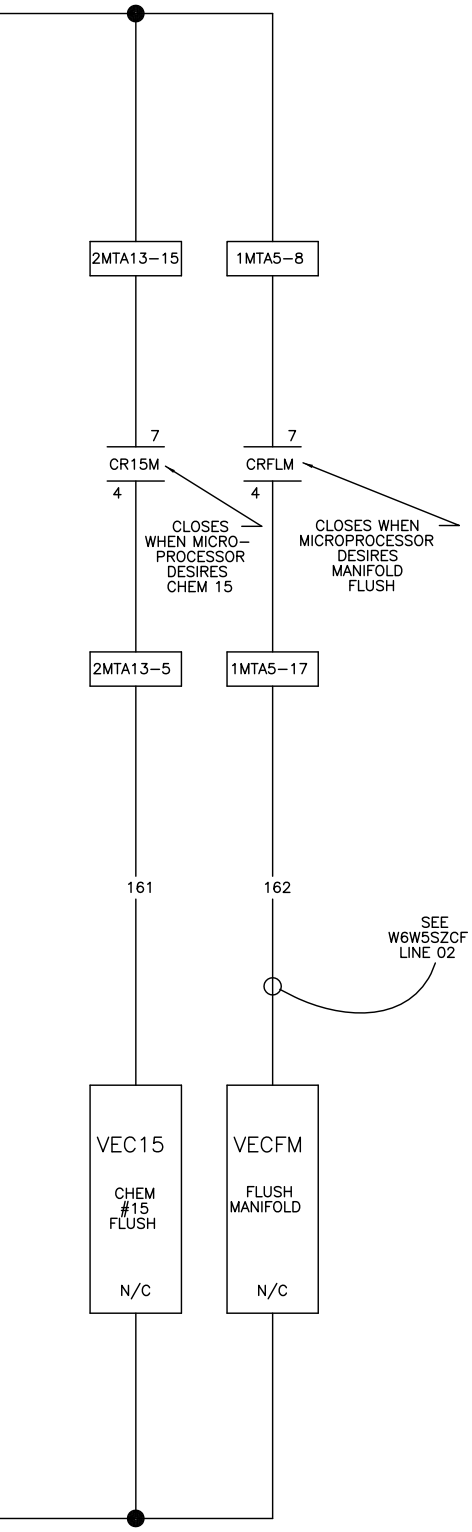


# W6W5SZCX

## MILTOUCH–EX™ CONTROLS

## SCHEMATIC: CENTRAL LIQUID SUPPLY FLUSH 6 THROUGH 15

PELLERIN MILNOR CORPORATION

10 11 12 13 14 15 16 17 18 19

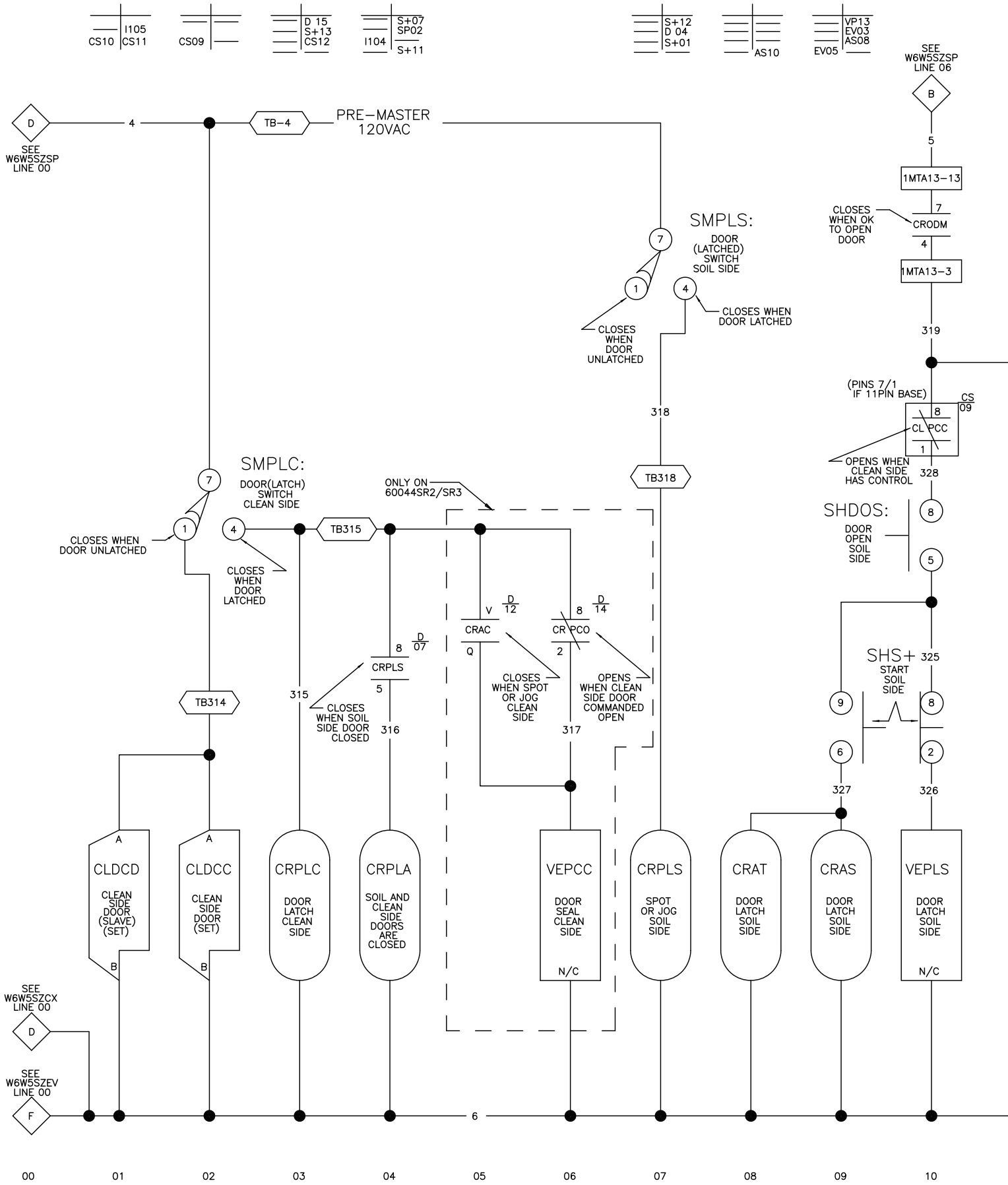
CS10 I105 CS11
CS09
D 15 S+13 CS12
I104 S+07 SP02 S+11
S+12 D 04 S+01
AS10
EV05 VP13 EV03 AS08
SEE W6W5SZSP LINE 06
SEE W6W5SZSP LINE 00
PRE-MASTER 120VAC
TB-4
1MTA13-13
CLOSES WHEN OK TO OPEN DOOR
CRODM
1MTA13-3
SMPLS:
DOOR (LATCHED) SWITCH SOIL SIDE
CLOSES WHEN DOOR UNLATCHED
CLOSES WHEN DOOR LATCHED
(PINS 7/1 IF 11PIN BASE)
CS 09
CL PCC
OPENS WHEN CLEAN SIDE HAS CONTROL
SMPLC:
DOOR(LATCH) SWITCH CLEAN SIDE
ONLY ON 60044SR2/SR3
TB318
TB315
TB314
CLOSES WHEN DOOR UNLATCHED
CLOSES WHEN DOOR LATCHED
SHDOS:
DOOR OPEN SOIL SIDE
CRAC
CR PCO
CRPLS
CLOSES WHEN SOIL SIDE DOOR CLOSED
CLOSES WHEN SPOT OR JOG CLEAN SIDE
OPENS WHEN CLEAN SIDE DOOR COMMANDED OPEN
SHS+
START SOIL SIDE
CLDCD CLEAN SIDE DOOR (SLAVE) (SET)
CLDCC CLEAN SIDE DOOR (SET)
CRPLC DOOR LATCH CLEAN SIDE
CRPLA SOIL AND CLEAN SIDE DOORS ARE CLOSED
VEPCC DOOR SEAL CLEAN SIDE N/C
CRPLS SPOT OR JOG SOIL SIDE
CRAT DOOR LATCH SOIL SIDE
CRAS DOOR LATCH SOIL SIDE
VEPLS DOOR LATCH SOIL SIDE N/C
SEE W6W5SZCX LINE 00
SEE W6W5SZEV LINE 00
00 01 02 03 04 05 06 07 08 09 10
W6W5SZD
2025174B

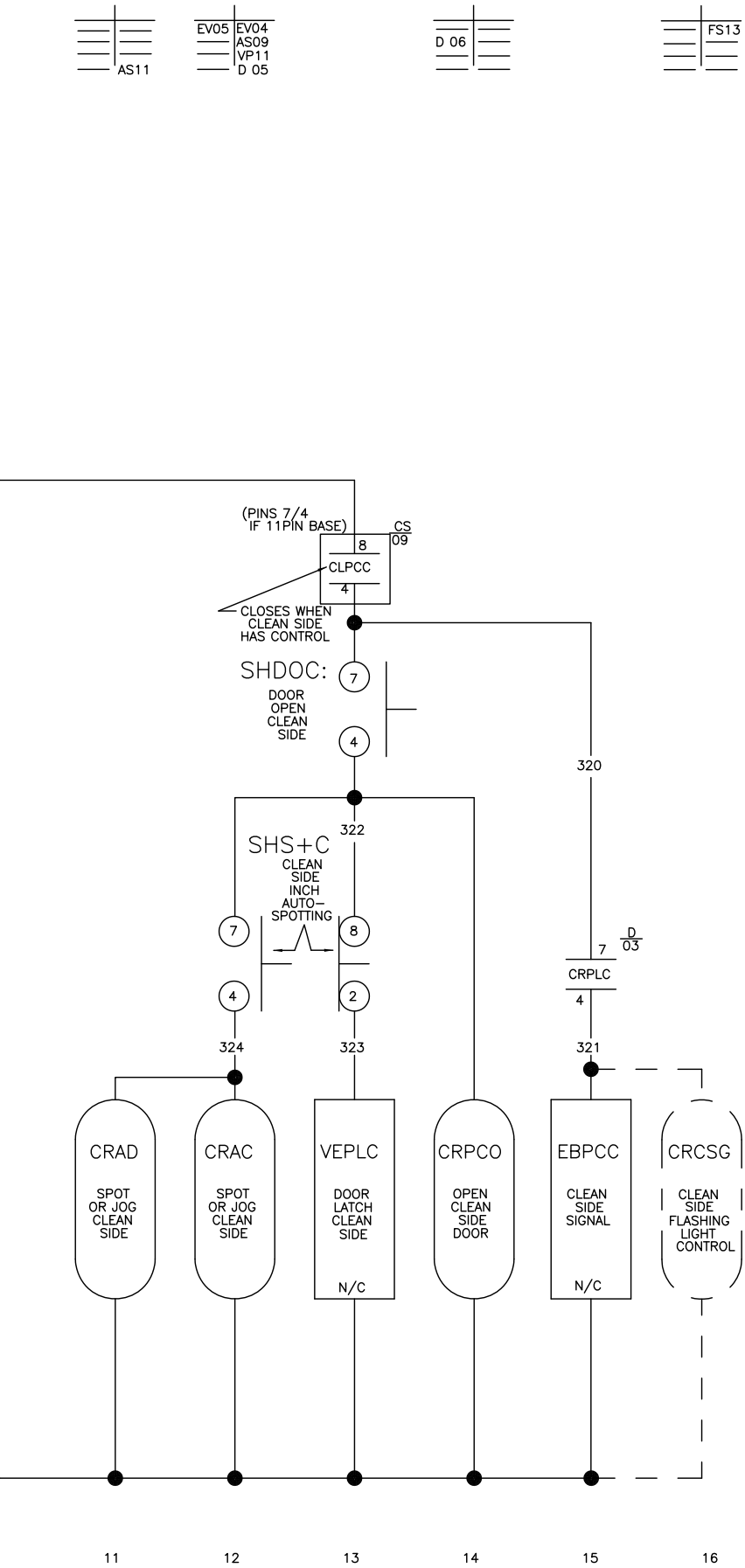


# W6W5SZD

## MILTOUCH-EX™ CONTROLS
## SCHEMATIC: DOOR CIRCUITS

110V1P50HZ/120V1P60HZ

PELLERIN MILNOR CORPORATION

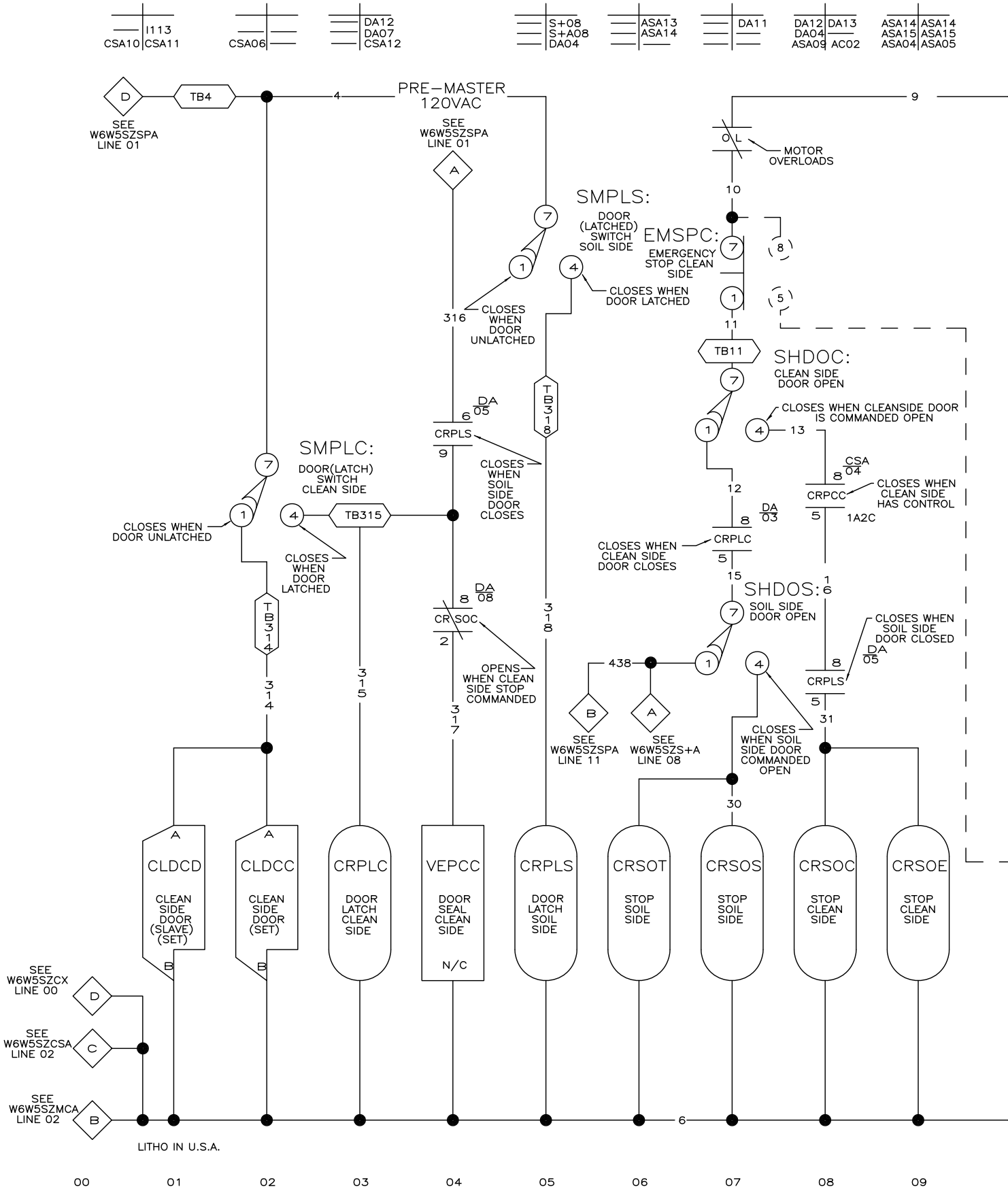
I113
CSA10 CSA11
CSA06
DA12
DA07
CSA12
S+08
S+A08
DA04
ASA13
ASA14
DA11
DA12 DA13
DA04
ASA09 AC02
ASA14 ASA14
ASA15 ASA15
ASA04 ASA05
PRE-MASTER
120VAC
TB4
SEE W6W5SZSPA LINE 01
SEE W6W5SZSPA LINE 01
MOTOR OVERLOADS
SMPLS:
DOOR (LATCHED) SWITCH SOIL SIDE
EMSPC:
EMERGENCY STOP CLEAN SIDE
CLOSES WHEN DOOR LATCHED
CLOSES WHEN DOOR UNLATCHED
TB11
SHDOC:
CLEAN SIDE DOOR OPEN
CLOSES WHEN CLEANSIDE DOOR IS COMMANDED OPEN
CRPLS
CLOSES WHEN SOIL SIDE DOOR CLOSES
SMPLC:
DOOR(LATCH) SWITCH CLEAN SIDE
TB315
CLOSES WHEN DOOR UNLATCHED
CLOSES WHEN DOOR LATCHED
CRPCC
CLOSES WHEN CLEAN SIDE HAS CONTROL
1A2C
CRPLC
CLOSES WHEN CLEAN SIDE DOOR CLOSES
SHDOS:
SOIL SIDE DOOR OPEN
CLOSES WHEN SOIL SIDE DOOR CLOSED
CRSOC
OPENS WHEN CLEAN SIDE STOP COMMANDED
CRPLS
SEE W6W5SZPA LINE 11
SEE W6W5SZS+A LINE 08
CLOSES WHEN SOIL SIDE DOOR COMMANDED OPEN
CLDCD
CLEAN SIDE DOOR (SLAVE) (SET)
CLDCC
CLEAN SIDE DOOR (SET)
CRPLC
DOOR LATCH CLEAN SIDE
VEPCC
DOOR SEAL CLEAN SIDE
N/C
CRPLS
DOOR LATCH SOIL SIDE
CRSOT
STOP SOIL SIDE
CRSOS
STOP SOIL SIDE
CRSOC
STOP CLEAN SIDE
CRSOE
STOP CLEAN SIDE
SEE W6W5SZCX LINE 00
SEE W6W5SZCSA LINE 02
SEE W6W5SZMCA LINE 02
LITHO IN U.S.A.
00 01 02 03 04 05 06 07 08 09
W6W5SZDA
2025174B

NOTES:

1. (J1), (J2) – REMOVE (J) FOR MACHINES WITH DOOR CLOSED OPTION.
2. TB IS LOCATED IN THE RIGHT CONTROL BOX.

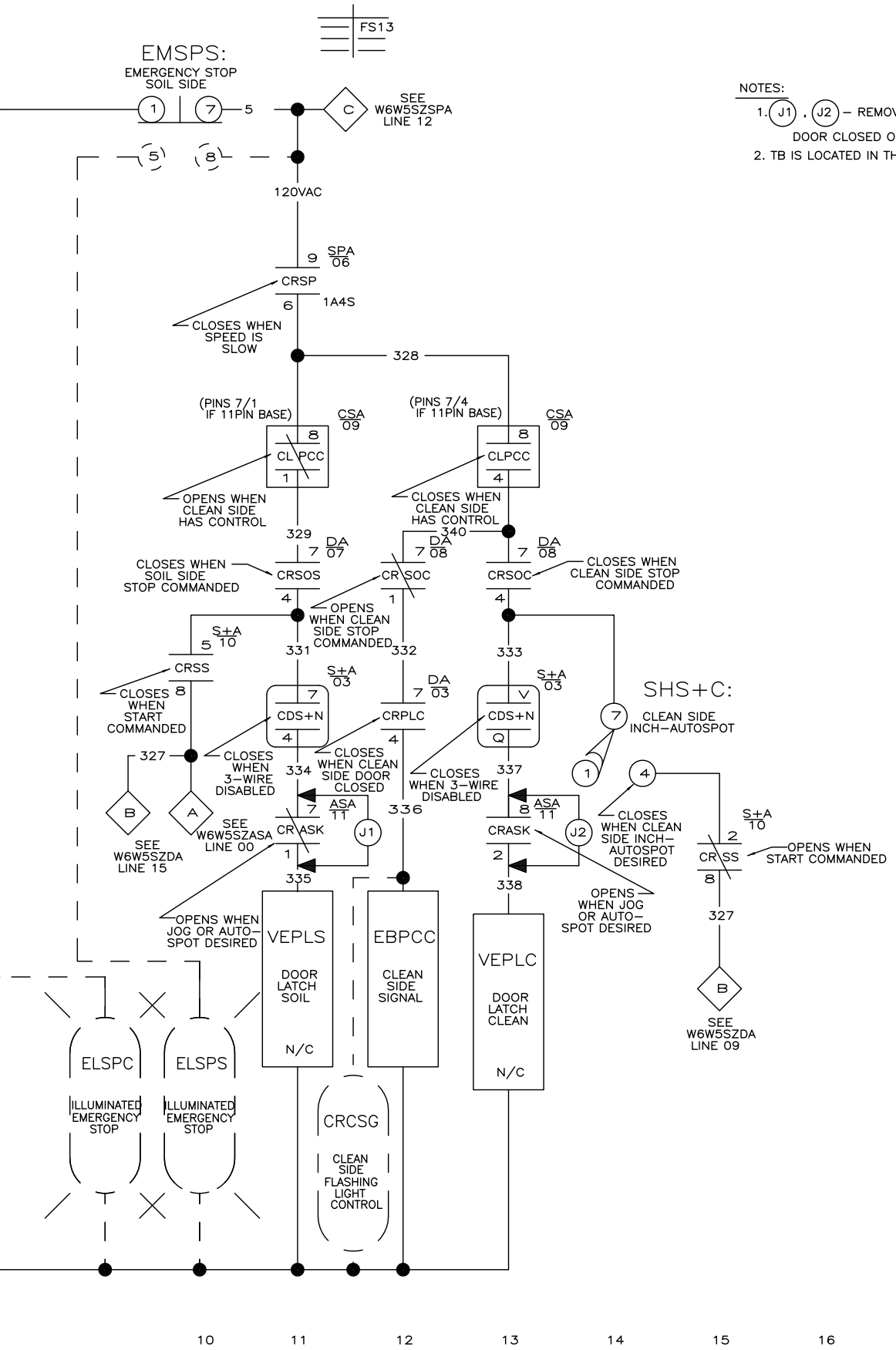


# W6W5SZDA

MILTOUCH–EX™ CONTROLS
MARK VI 72044 SP2/3 ONLY
SCHEMATIC: DOOR CIRCUITS
110V1P50HZ/120V1P60HZ
PELLERIN MILNOR CORPORATION

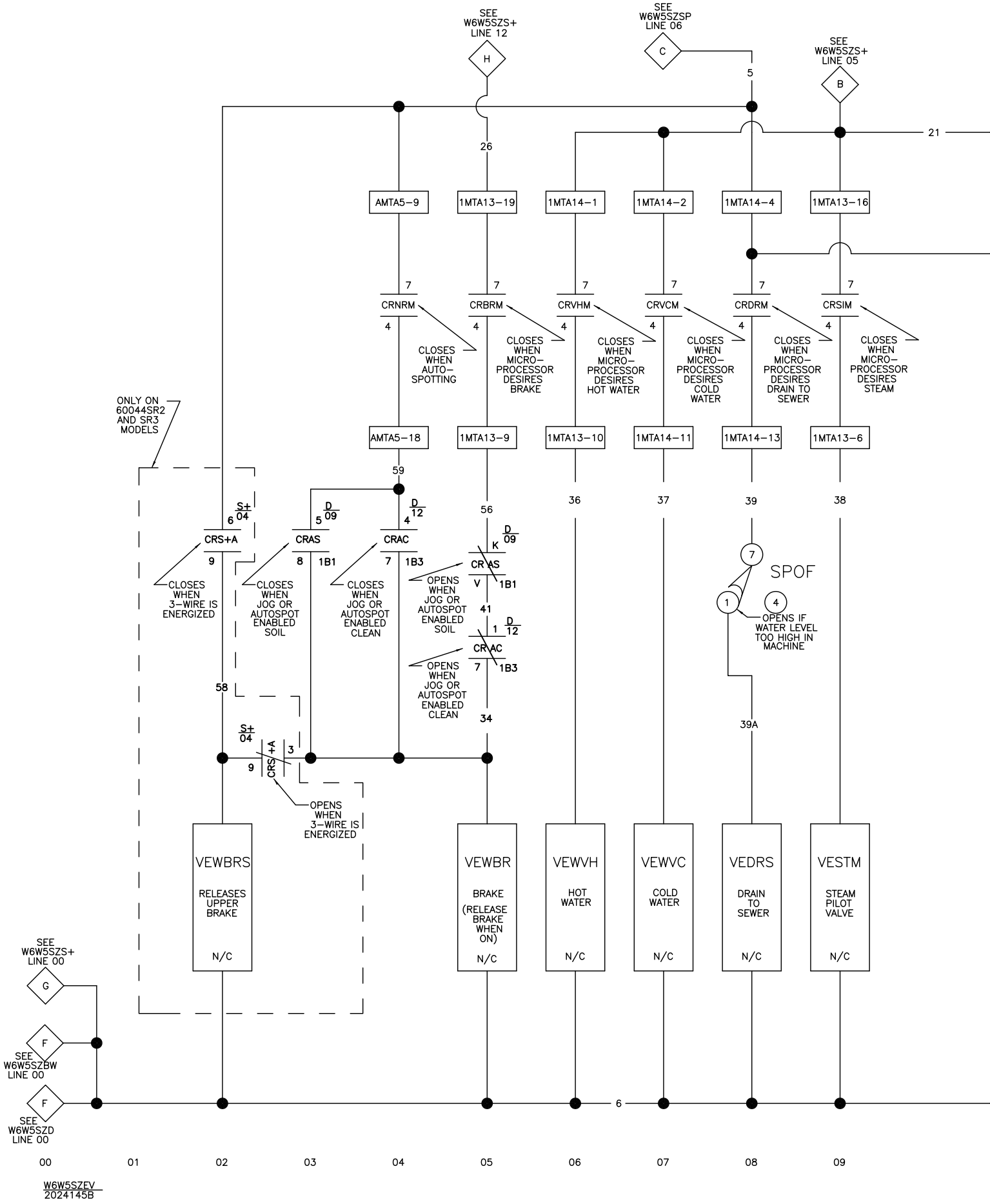
SEE W6W5SZS+ LINE 12
H
SEE W6W5SZSP LINE 06
C
SEE W6W5SZS+ LINE 05
B
5
21
26
AMTA5–9
1MTA13–19
1MTA14–1
1MTA14–2
1MTA14–4
1MTA13–16
CRNRM
CRBRM
CRVHM
CRVCM
CRDRM
CRSIM
CLOSES WHEN AUTO–SPOTTING
CLOSES WHEN MICRO–PROCESSOR DESIRES BRAKE
CLOSES WHEN MICRO–PROCESSOR DESIRES HOT WATER
CLOSES WHEN MICRO–PROCESSOR DESIRES COLD WATER
CLOSES WHEN MICRO–PROCESSOR DESIRES DRAIN TO SEWER
CLOSES WHEN MICRO–PROCESSOR DESIRES STEAM
ONLY ON 60044SR2 AND SR3 MODELS
AMTA5–18
1MTA13–9
1MTA13–10
1MTA14–11
1MTA14–13
1MTA13–6
59
56
36
37
39
38
CRS+A
CRAS
CRAC
CLOSES WHEN 3–WIRE IS ENERGIZED
CLOSES WHEN JOG OR AUTOSPOT ENABLED SOIL
CLOSES WHEN JOG OR AUTOSPOT ENABLED CLEAN
OPENS WHEN JOG OR AUTOSPOT ENABLED SOIL
OPENS WHEN JOG OR AUTOSPOT ENABLED CLEAN
41
58
34
39A
SPOF
OPENS IF WATER LEVEL TOO HIGH IN MACHINE
OPENS WHEN 3–WIRE IS ENERGIZED
VEWBRS
RELEASES UPPER BRAKE
N/C
VEWBR
BRAKE (RELEASE BRAKE WHEN ON)
N/C
VEWVH
HOT WATER
N/C
VEWVC
COLD WATER
N/C
VEDRS
DRAIN TO SEWER
N/C
VESTM
STEAM PILOT VALVE
N/C
SEE W6W5SZS+ LINE 00
G
F
SEE W6W5SZBW LINE 00
F
SEE W6W5SZD LINE 00
6
00
01
02
03
04
05
06
07
08
09
W6W5SZEV
2024145B

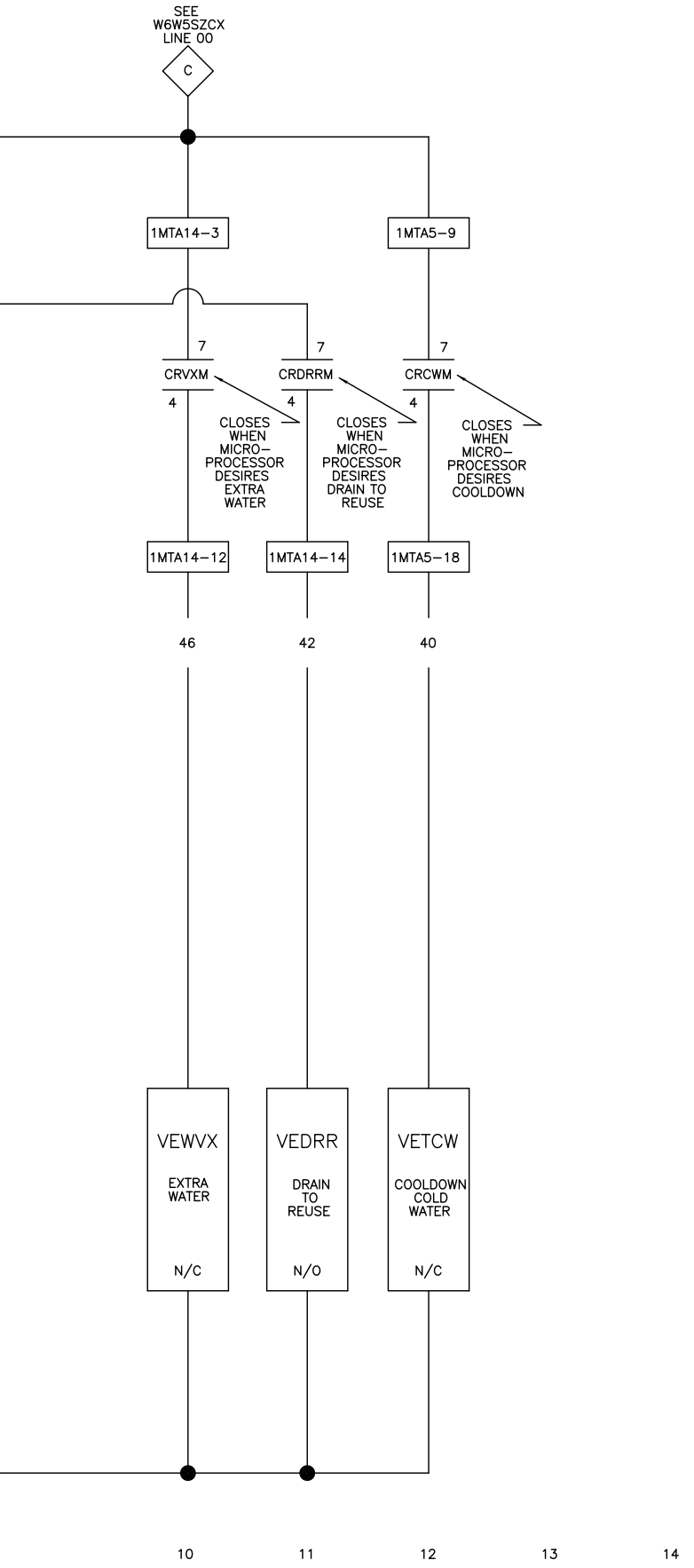


# W6W5SZEV

## MILTOUCH–EX™ CONTROLS

## SHCEMATIC: ELECTRICAL VALVES

110V1P50HZ/120V1P60HZ

PELLERIN MILNOR CORPORATION

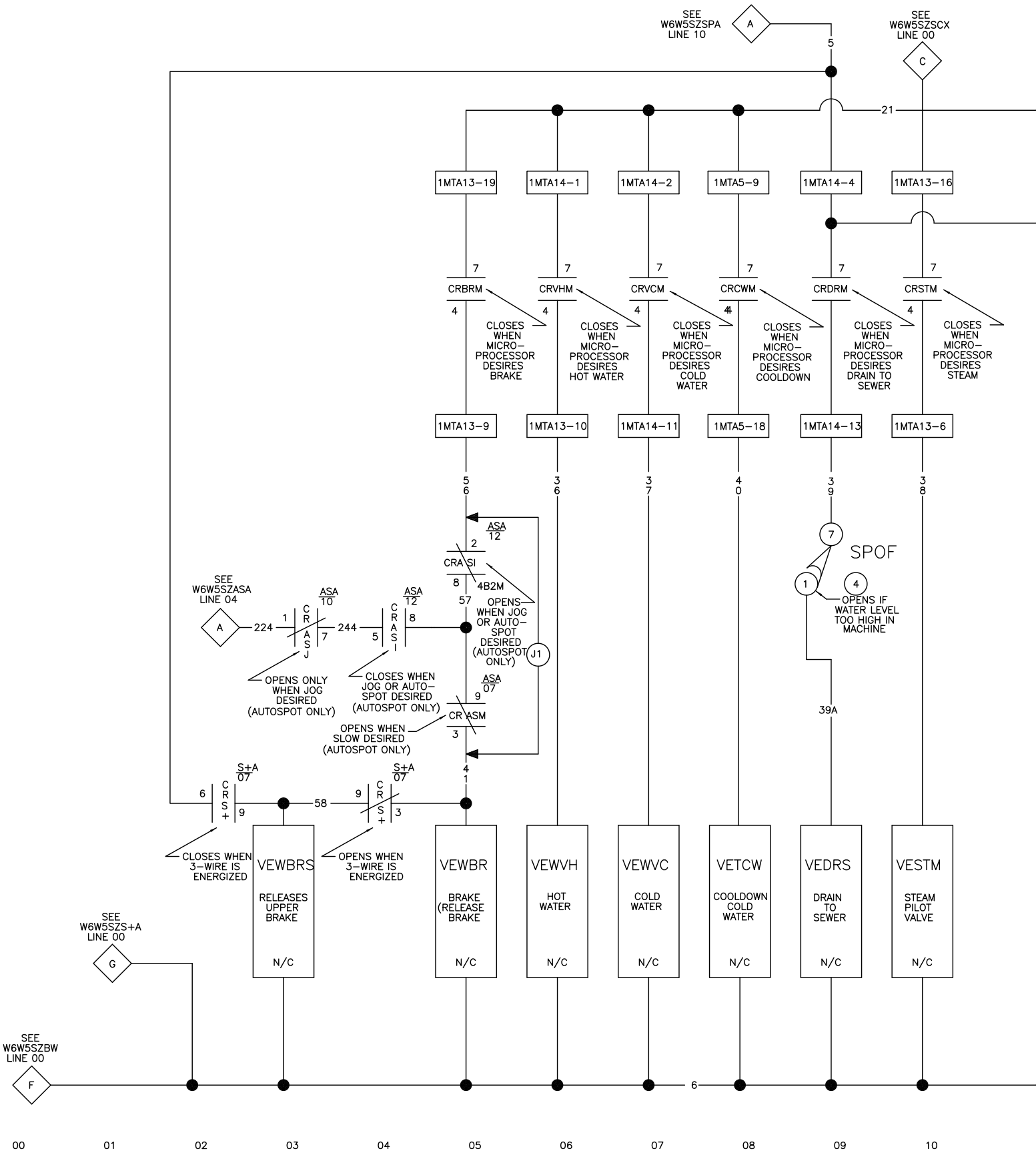
SEE W6W5SZSPA LINE 10
A
5
SEE W6W5SZSCX LINE 00
C
21
1MTA13–19
1MTA14–1
1MTA14–2
1MTA5–9
1MTA14–4
1MTA13–16
CRBRM
CRVHM
CRVCM
CRCWM
CRDRM
CRSTM
CLOSES WHEN MICRO–PROCESSOR DESIRES BRAKE
CLOSES WHEN MICRO–PROCESSOR DESIRES HOT WATER
CLOSES WHEN MICRO–PROCESSOR DESIRES COLD WATER
CLOSES WHEN MICRO–PROCESSOR DESIRES COOLDOWN
CLOSES WHEN MICRO–PROCESSOR DESIRES DRAIN TO SEWER
CLOSES WHEN MICRO–PROCESSOR DESIRES STEAM
1MTA13–9
1MTA13–10
1MTA14–11
1MTA5–18
1MTA14–13
1MTA13–6
ASA 12
CRASI
4B2M
OPENS WHEN JOG OR AUTO–SPOT DESIRED (AUTOSPOT ONLY)
J1
SPOF
OPENS IF WATER LEVEL TOO HIGH IN MACHINE
SEE W6W5SZASA LINE 04
ASA 10
CRASJ
OPENS ONLY WHEN JOG DESIRED (AUTOSPOT ONLY)
CLOSES WHEN JOG OR AUTO–SPOT DESIRED (AUTOSPOT ONLY)
ASA 07
CRASM
OPENS WHEN SLOW DESIRED (AUTOSPOT ONLY)
39A
S+A 07
CRS+
CLOSES WHEN 3–WIRE IS ENERGIZED
OPENS WHEN 3–WIRE IS ENERGIZED
VEWBRS
RELEASES UPPER BRAKE
N/C
VEWBR
BRAKE (RELEASE BRAKE
N/C
VEWVH
HOT WATER
N/C
VEWVC
COLD WATER
N/C
VETCW
COOLDOWN COLD WATER
N/C
VEDRS
DRAIN TO SEWER
N/C
VESTM
STEAM PILOT VALVE
N/C
SEE W6W5SZS+A LINE 00
G
SEE W6W5SZBW LINE 00
F
6
00
01
02
03
04
05
06
07
08
09
10
W6W5SZEVA
2020532B

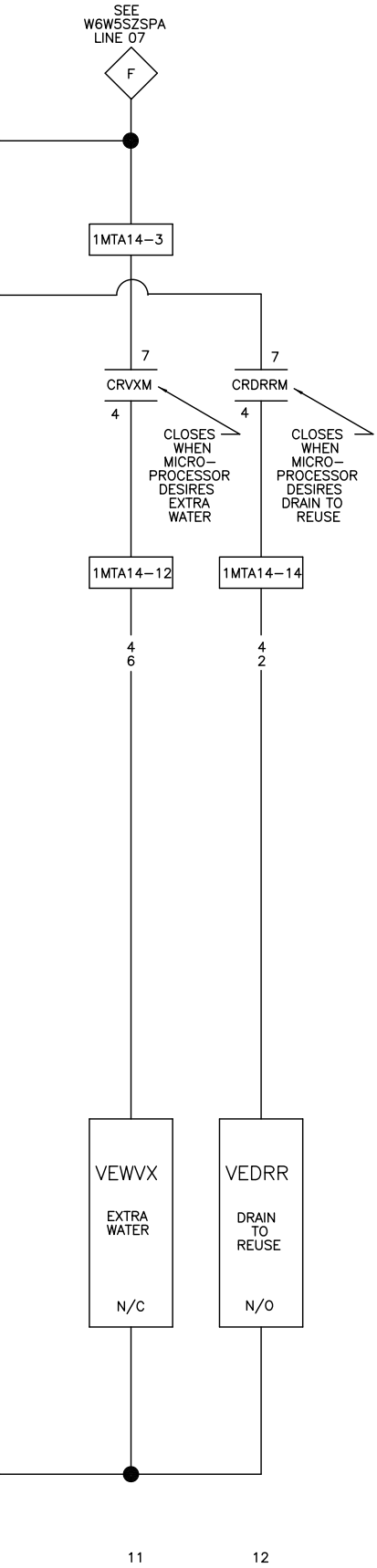


# W6W5SZEVA

## MILTOUCH–EX™ CONTROLS
## 72044 SP2/3 ONLY
## SCHEMATIC: ELECTRICAL VALVES
## 110V1P50HZ/120V1P60HZ
PELLERIN MILNOR CORPORATION

NOTES:

1. REMOVE (J1) FOR MACHINES WITH AUTOSPOT.
2. 1MTA13, 1MTA14 ARE LOCATED ON BO24–1 (24 OUTPUT BOARD).

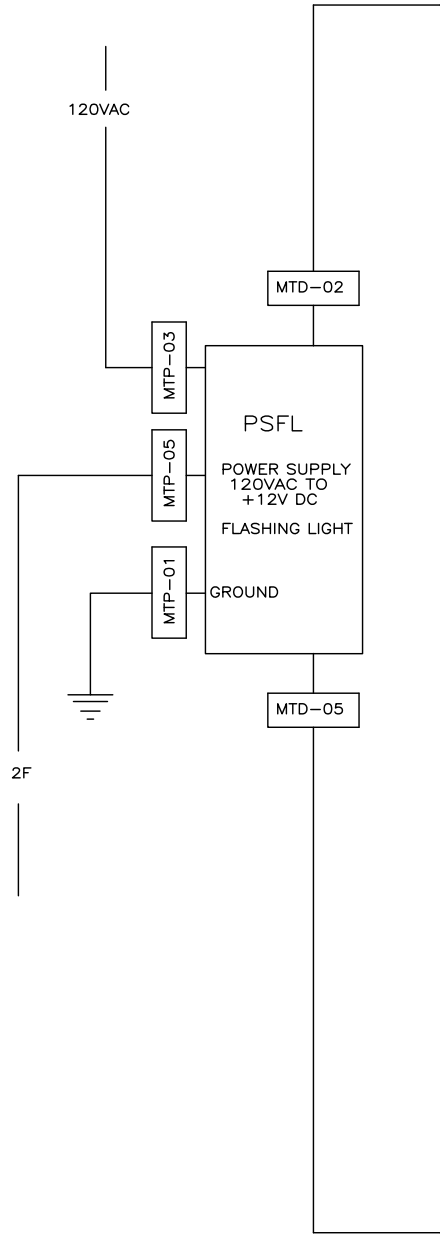


00 01 02 03 04 05 06 07 08 09

W6W5SZFS
2020214B

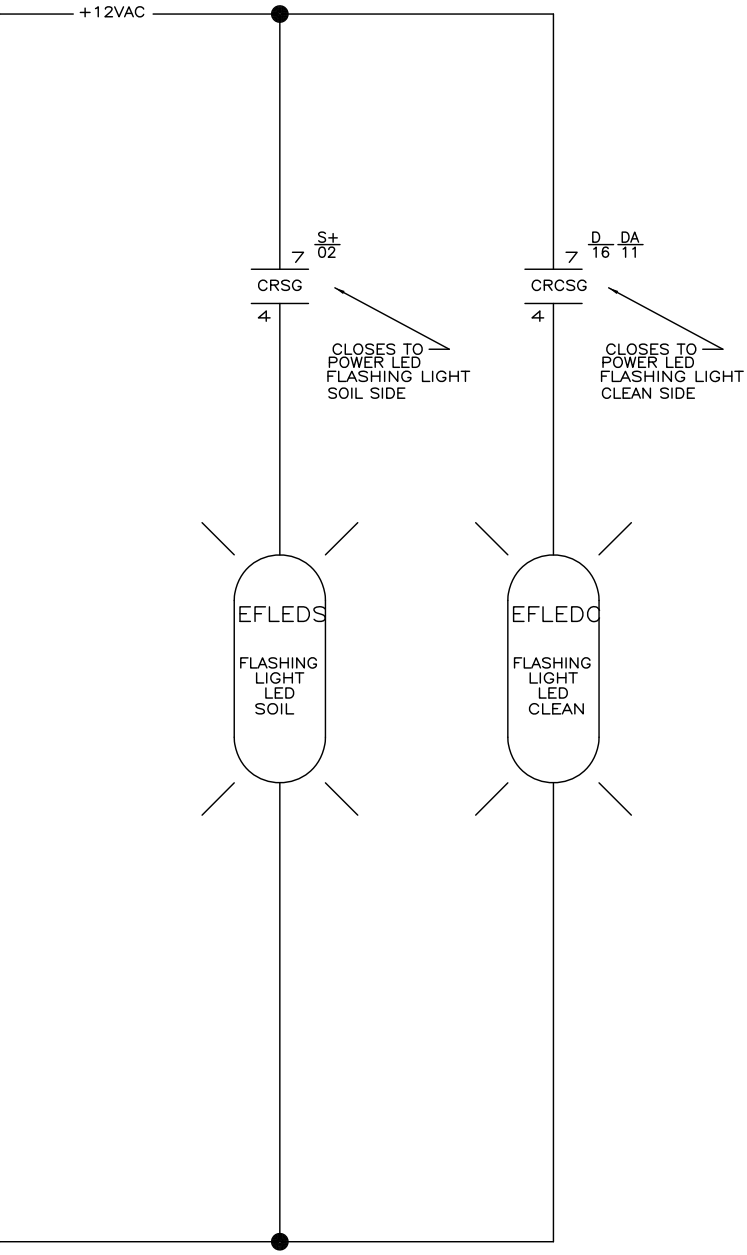


# W6W5SZFS

## SCHEMATIC: OPTIONAL FLASHING SIGNAL LIGHT

PELLERIN MILNOR CORPORATION

10 11 12 13 14 15 16 17 18 19

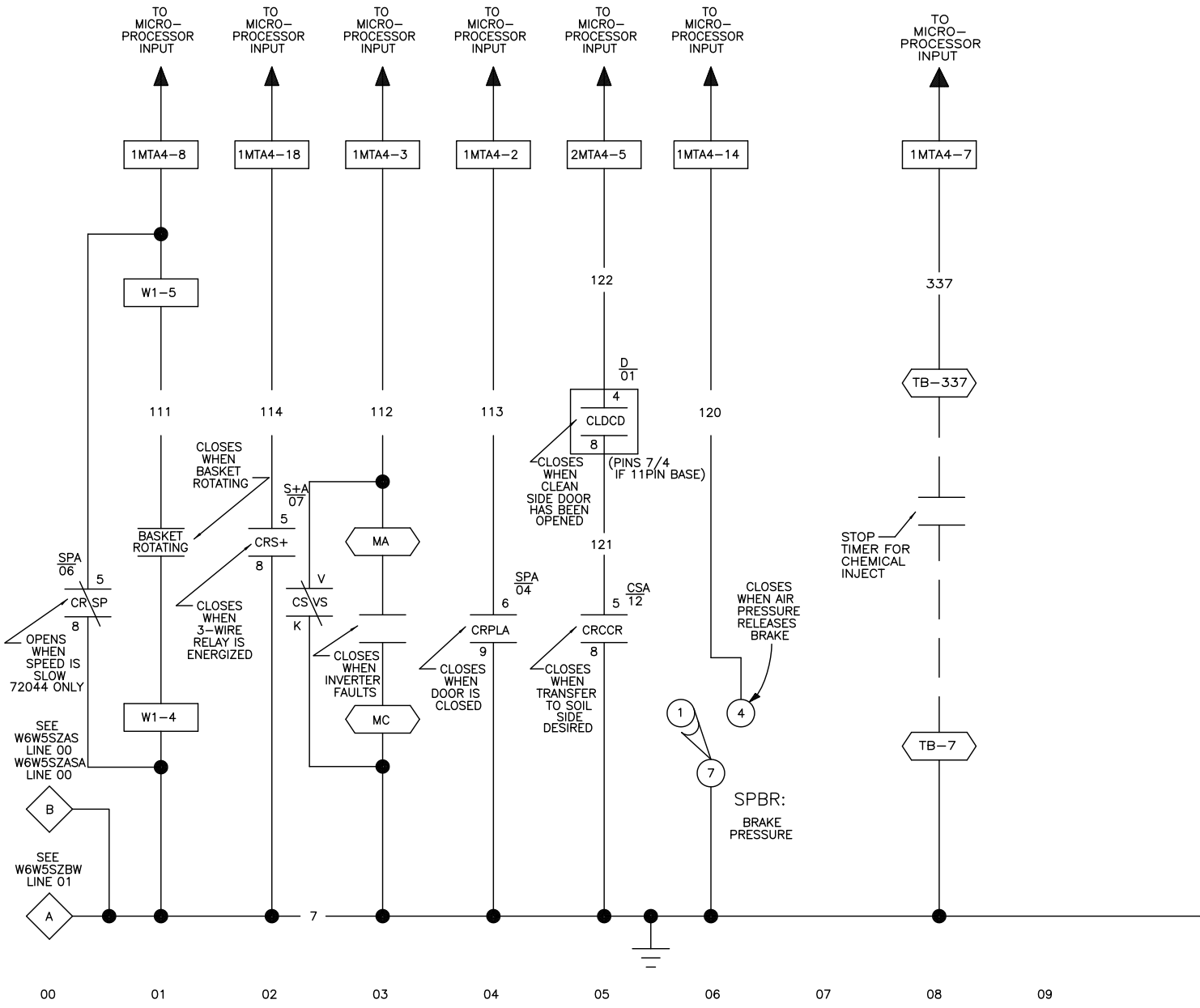


W6W5SZI1
2025174B

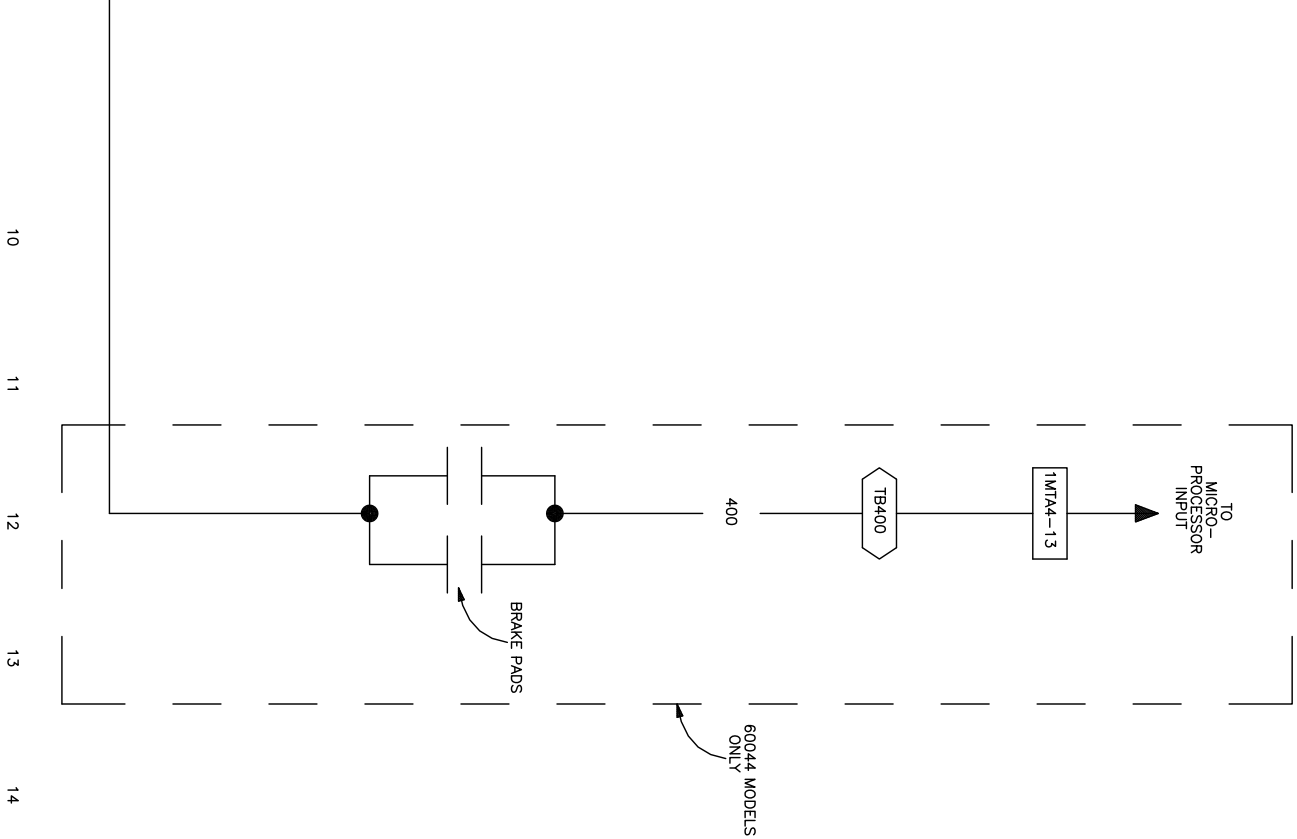


# W6W5SZI1

## MILTOUCH-EX™ CONTROLS
## SCHEMATIC: MICROPROCESSOR INPUTS

PELLERIN MILNOR CORPORATION

W6W5SZI1
2025174B



W6W5SZI1
2025174B

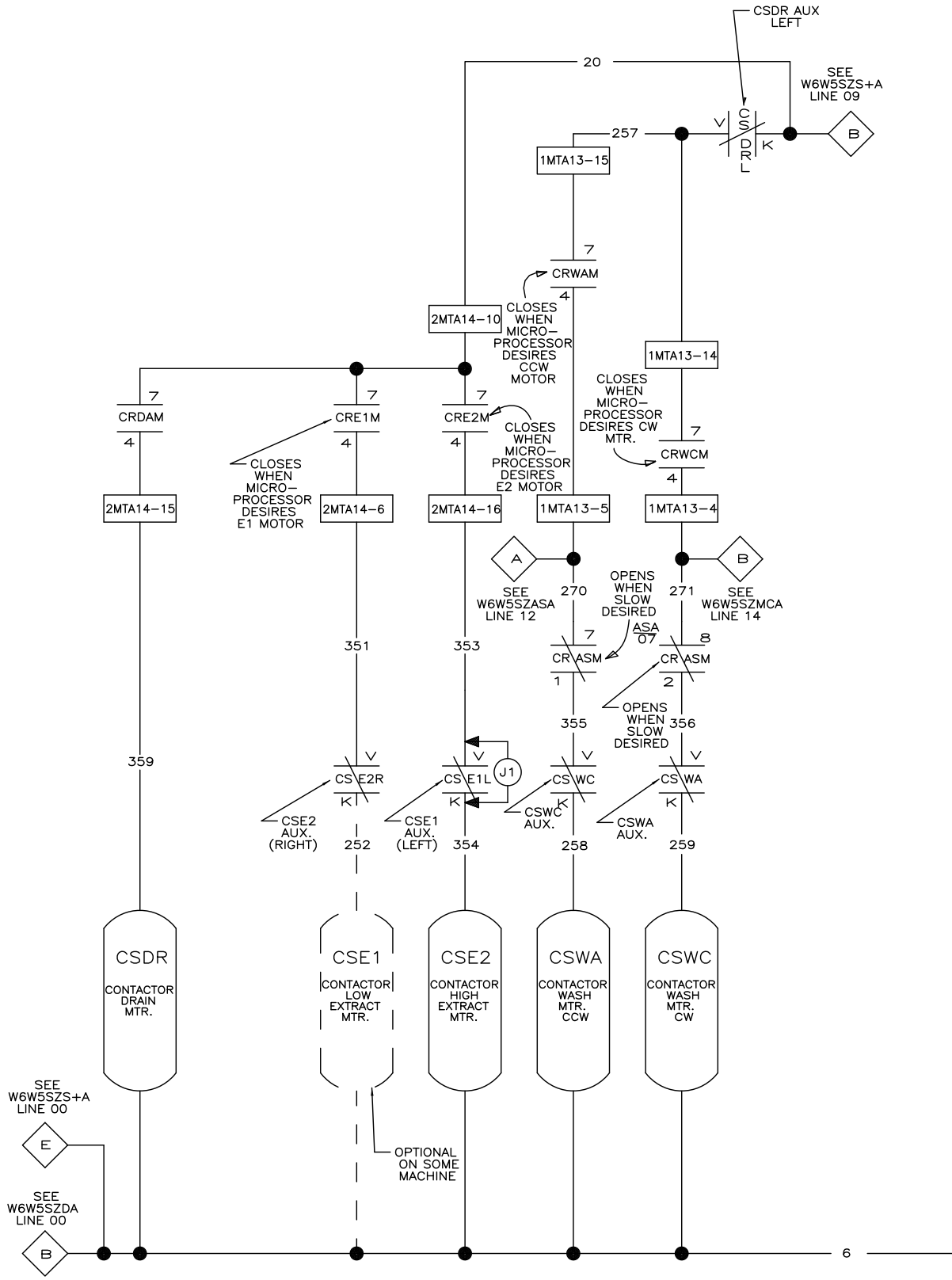


W6W5SZMCA
2022104B

NOTES:

1. 1MTA13, IS LOCATED ON BO24–1(24 OUTPUT BOARD)
2. 2MTA14 IS LOCATED ON BO24–2(24 OUTPUT BOARD)
3. TBA IS LOCATED IN HIGH VOLTAGE CONTROL BOX.
4. REMOVE J1 FOR 2 SPEED EXTRACT

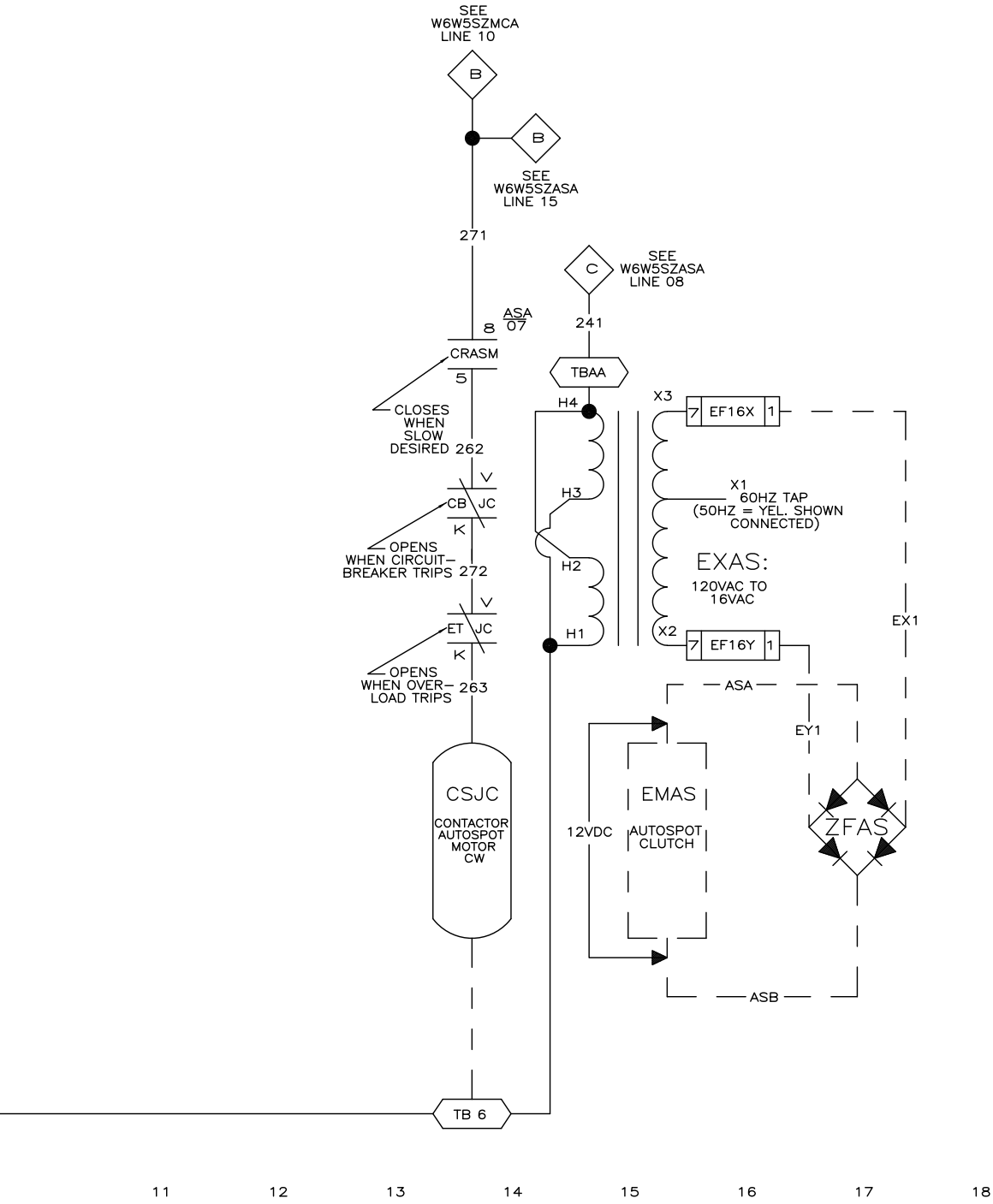


# W6W5SZMCA

## MILTOUCH–EX™ CONTROLS
## 72044 SR2/3 ONLY
## SCHEMATIC: DRIVE MOTOR CONTACTORS
## 110V1P50HZ/120V1P60HZ
PELLERIN MILNOR CORPORATION

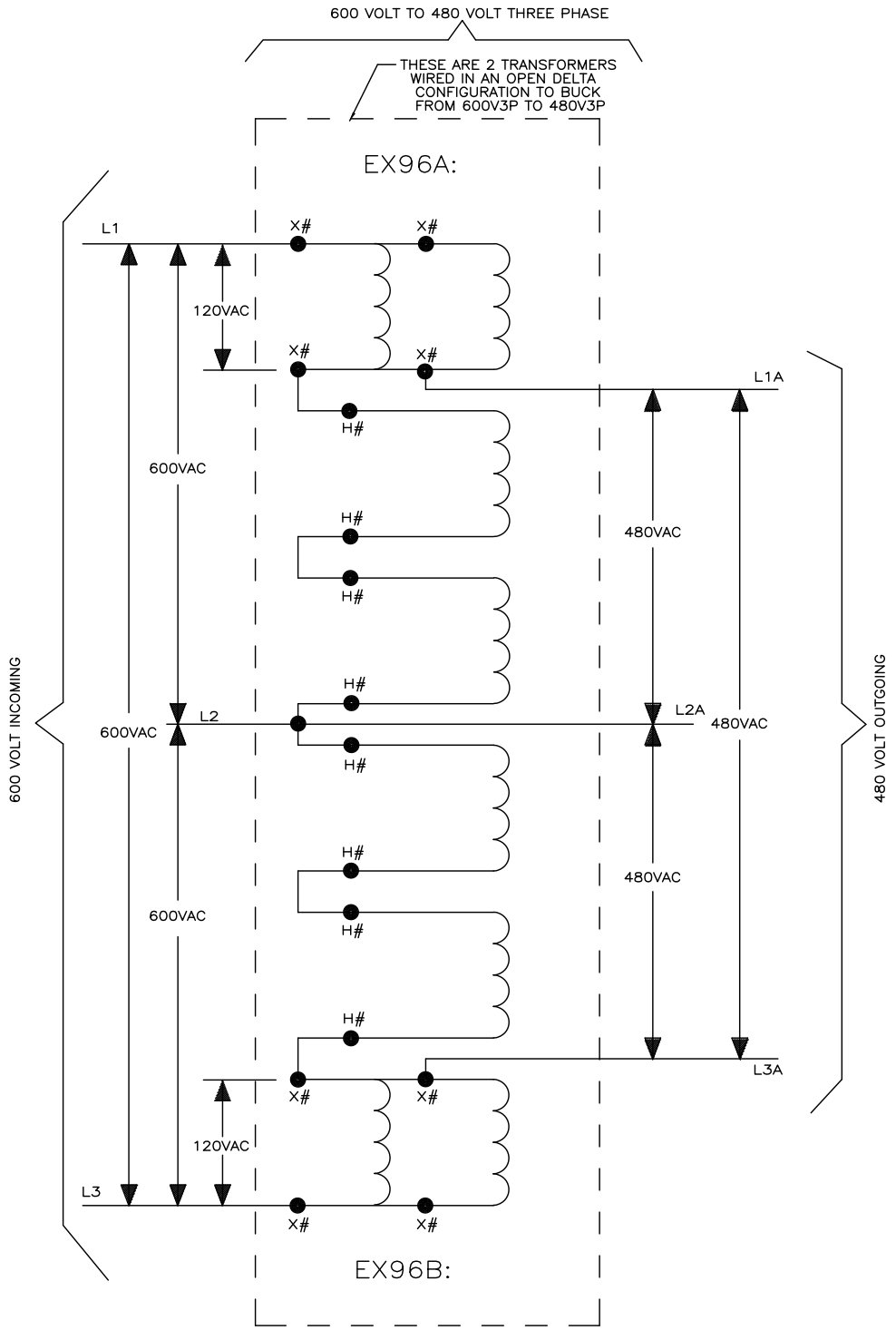


00 01 02 03 04 05 06 07 08 09 10

W6W5SZMT6
2019454B

| INPUT (SUPPLY SYSTEM) | DESIRED OUTPUT CONNECTION | |
|---|---|---|
| DELTA 3 WIRE | WYE 3 OR 4 WIRE | DO NOT USE |
| OPEN DELTA 3 WIRE | WYE 3 OR 4 WIRE | DO NOT USE |
| WYE 3 OR 4 WIRE | CLOSED DELTA 3 WIRE | DO NOT USE |
| WYE 4 WIRE | WYE 3 OR 4 WIRE | OK |
| WYE 3 OR 4 WIRE | OPEN DELTA 3 WIRE | OK |
| CLOSED DELTA 3 WIRE | OPEN DELTA 3 WIRE | OK |

REFER TO TRANSFORMER WIRING DIAGRAM FOR APPROPIATE WIRE NUMBERS.

THE PRIMARY OF EACH TRANSFORMER NOTED BY H# MUST BE WIRED FOR 480 VOLTS. THE SECONDARY OF EACH TRANSFORMER NOTED BY X# MUST BE WIRED FOR 120 VOLTS.

W6W5SZMT6
MILTOUCH-EX™ CONTROLS
SCHEMATIC: 600V TO 480V BUCK
PELLERIN MILNOR CORPORATION

11 12 13 14 15 16 17

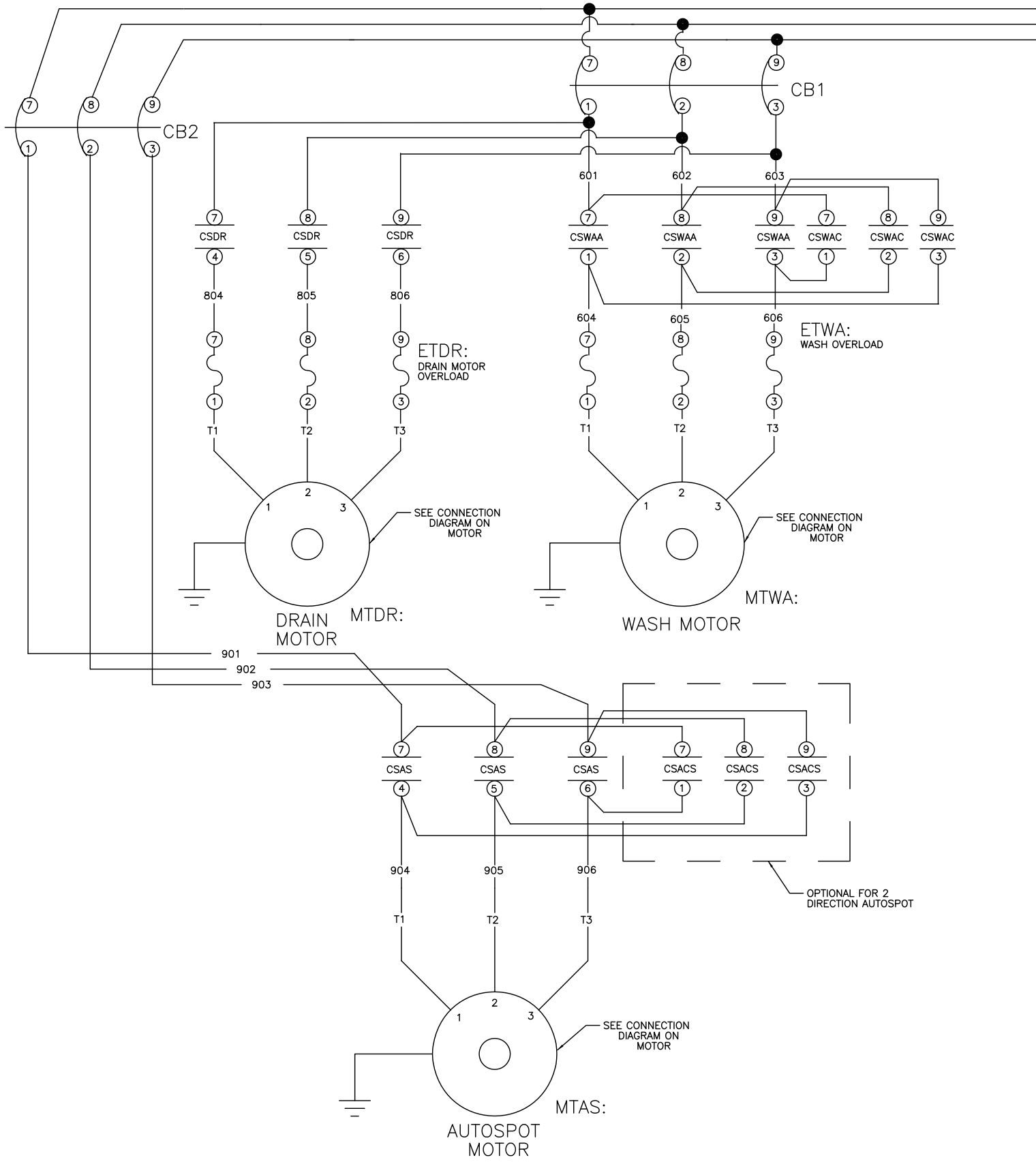


00 01 02 03 04 05 06 07 08 09 10

W6W5SZMTA
2014152B

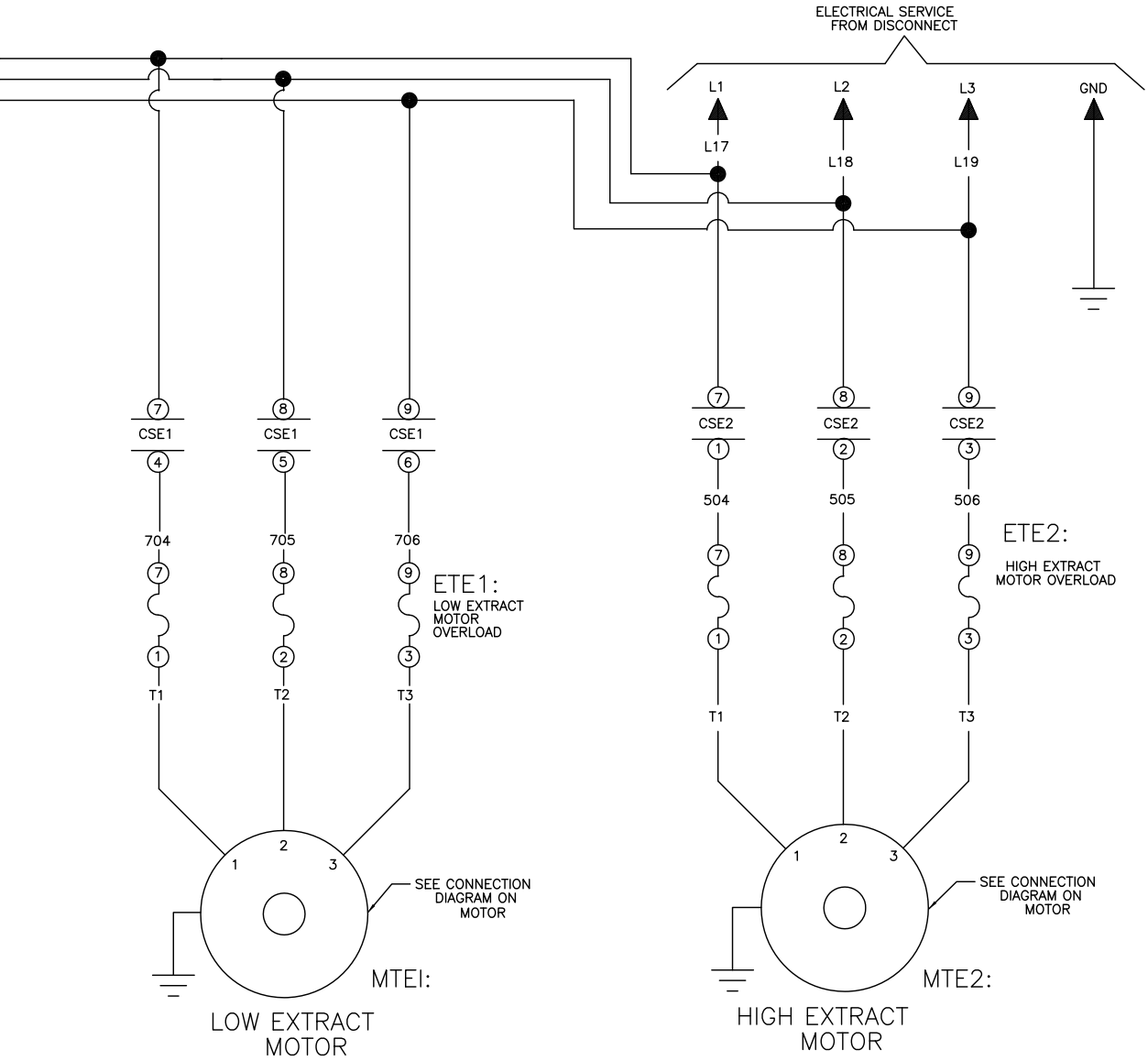


W6W5SZMTA
2014152B

# W6W5SZMTA

## MILTOUCH-EX™ CONTROLS

## SCHEMATIC: 72044SR2/3 MOTOR CONNECTIONS

PELLERIN MILNOR CORPORATION

NOTE:

1. THE FUSING SHOWN ON THIS DRAWING WILL VARY BASED ON VOLTAGE. CHECK MACHINE NAMEPLATE FOR ACTUAL FUSING OF MOTORS.

11 12 13 14 15 16 17 18 19

W6W5SZMTA
2014152B

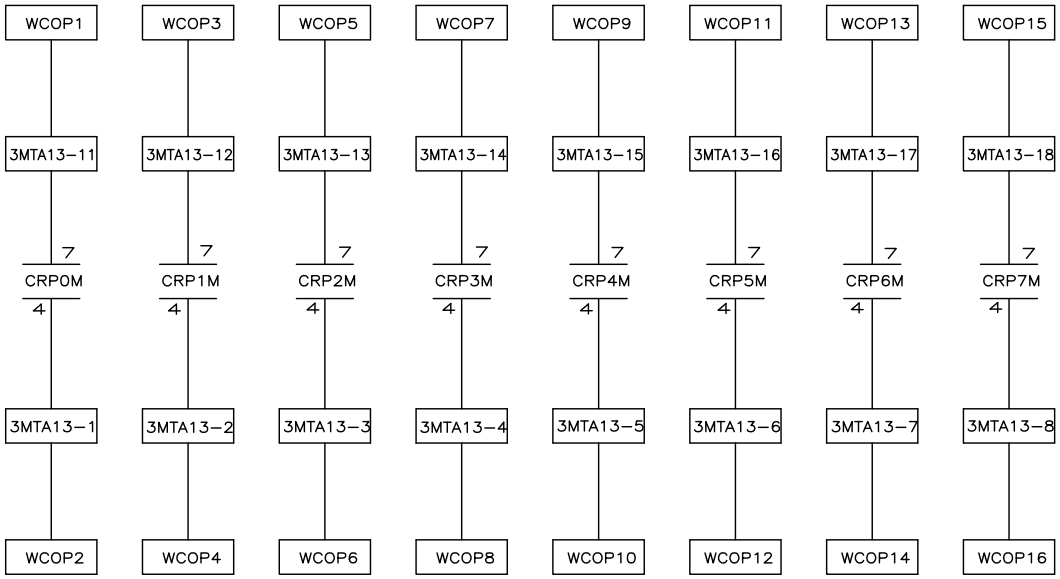


00 01 02 03 04 05 06 07 08

W6W5SZOP
2014152B

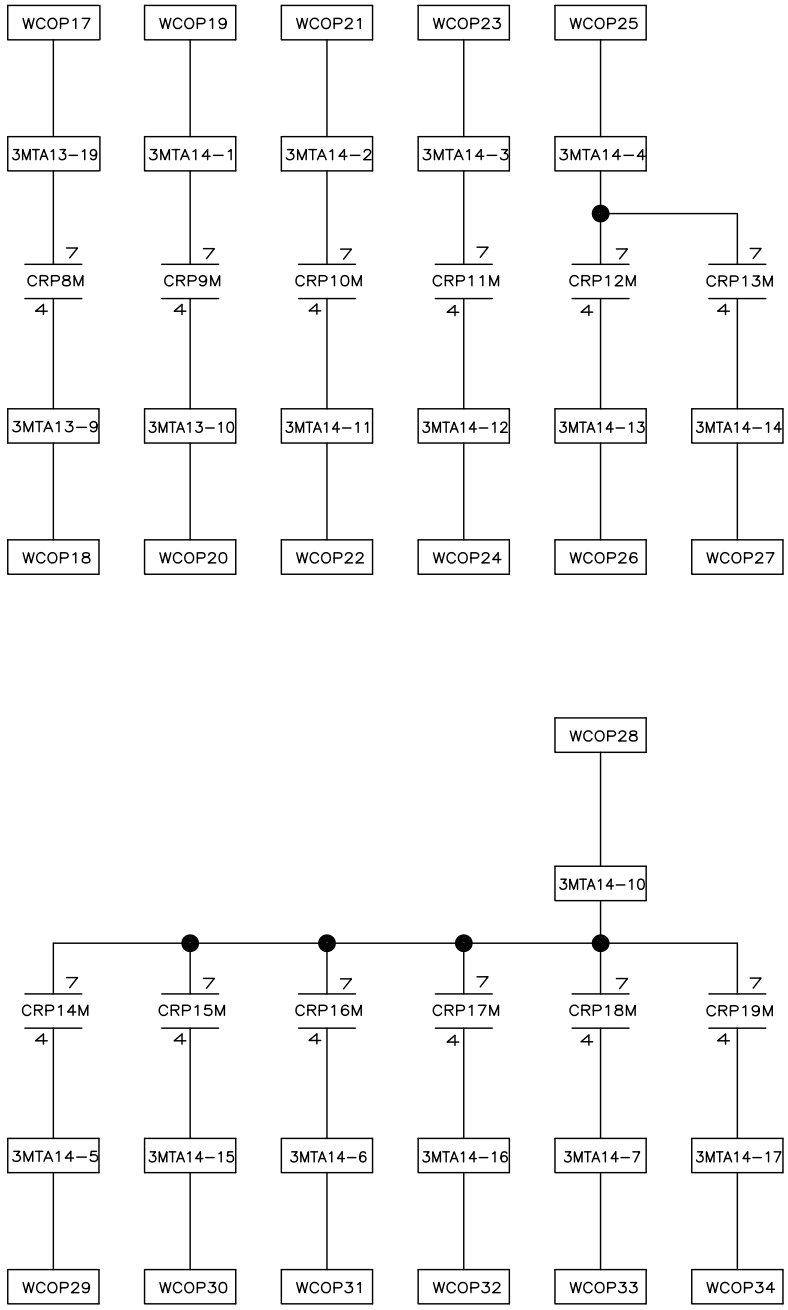


# W6W5SZOP

## MILTOUCH–EX ™ CONTROLS

## SCHEMATIC: 20 OPTIONAL PROGRAMABLE OUTPUTS

PELLERIN MILNOR CORPORATION

09 10 11 12 13 14 15 16 17

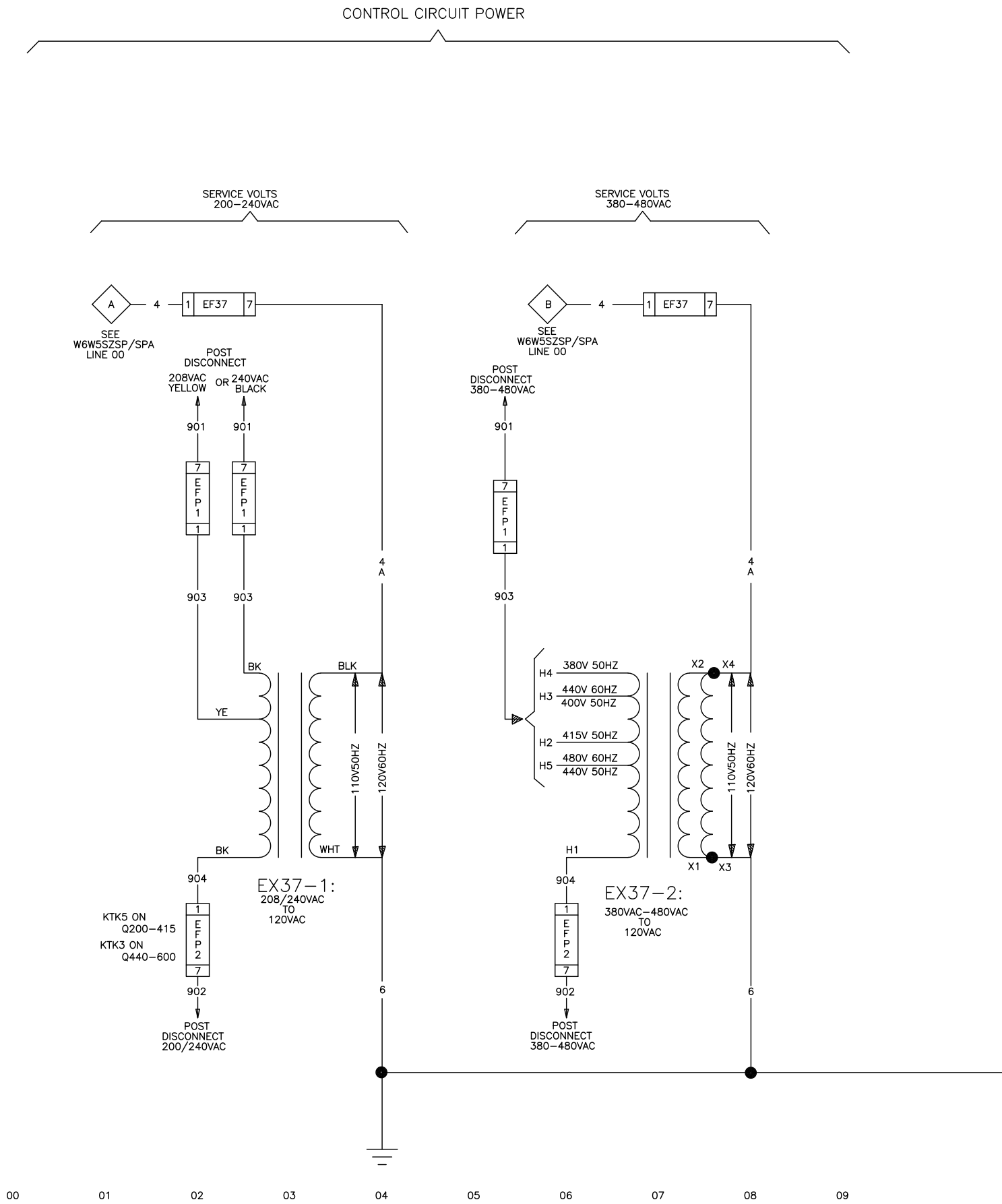


W6W5SZPS
2019394B

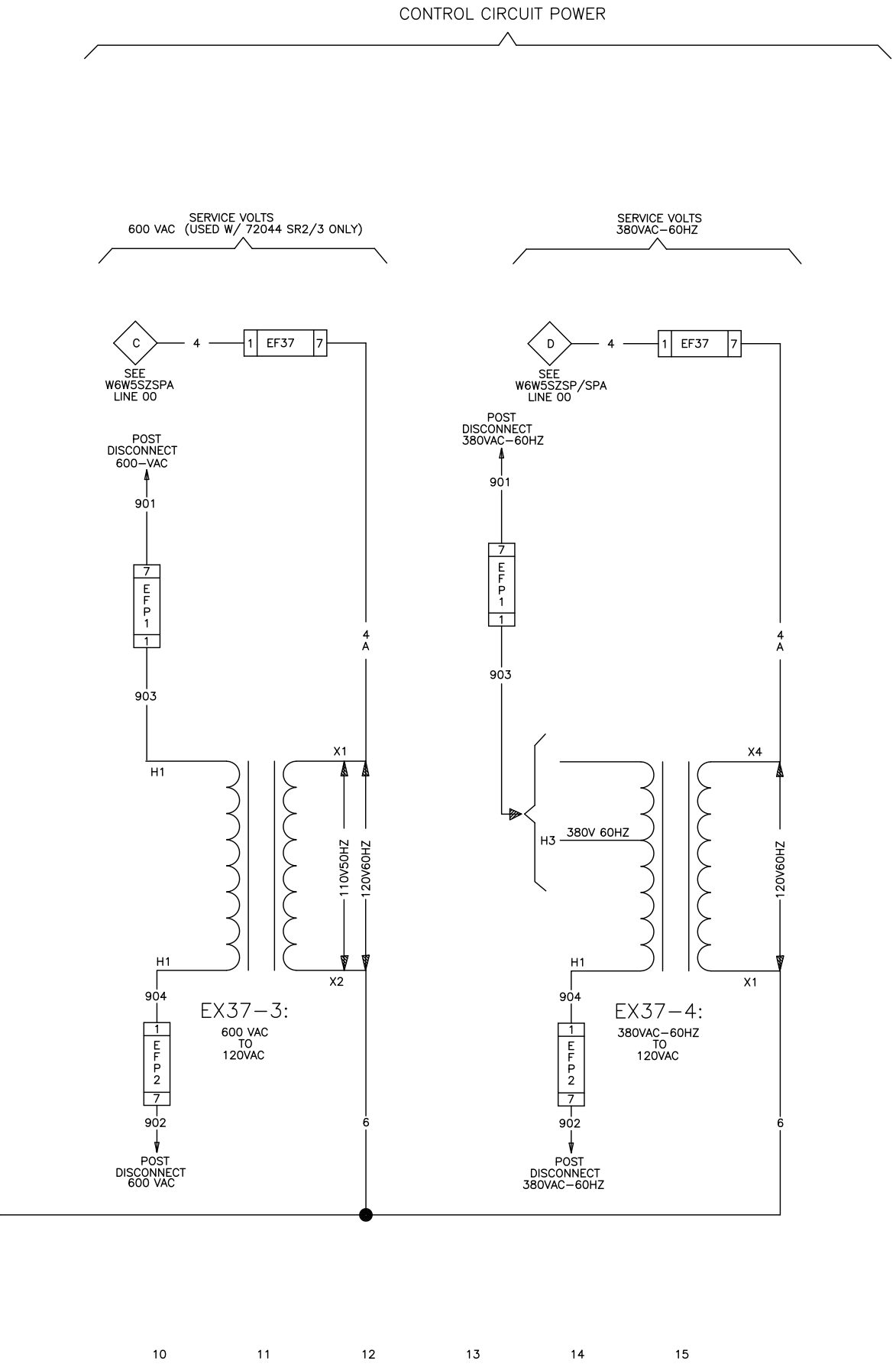


# W6W5SZPS

## MILTOUCH–EX™ CONTROLS

## SCHEMATIC:SOURCE 110V1P50HZ/120V1P60HZ CONTROL CIRCUIT POWER

PELLERIN MILNOR CORPORATION

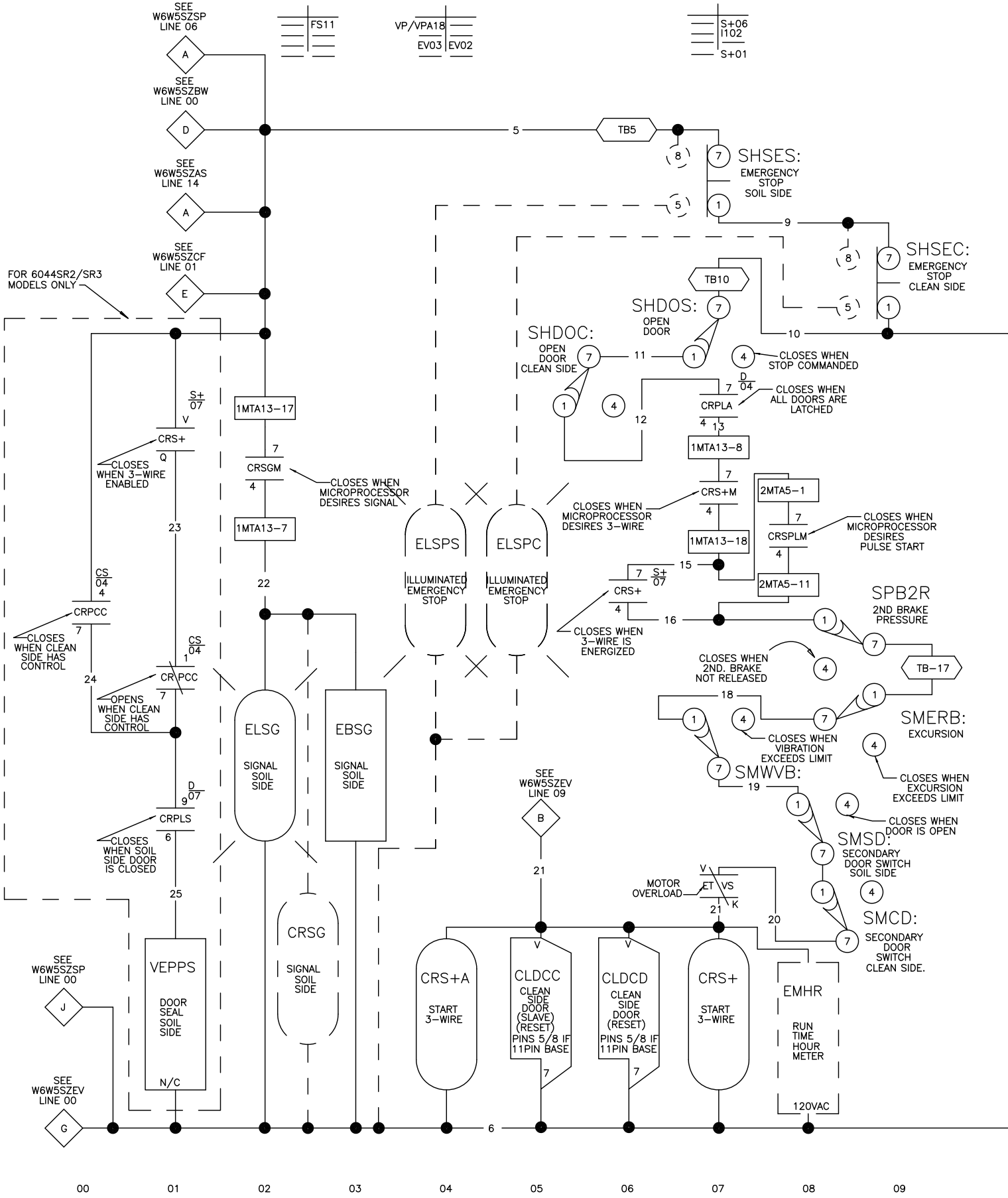
SEE W6W5SZSP LINE 06
A
SEE W6W5SZBW LINE 00
D
SEE W6W5SZAS LINE 14
A
SEE W6W5SZCF LINE 01
E
FS11
VP/VPA18
EV03 EV02
S+06
I102
S+01
TB5
SHSES:
EMERGENCY STOP SOIL SIDE
SHSEC:
EMERGENCY STOP CLEAN SIDE
TB10
SHDOS:
OPEN DOOR
SHDOC:
OPEN DOOR CLEAN SIDE
CLOSES WHEN STOP COMMANDED
CLOSES WHEN ALL DOORS ARE LATCHED
CRPLA
1MTA13-8
CRS+M
CLOSES WHEN MICROPROCESSOR DESIRES 3-WIRE
2MTA5-1
CRSPLM
CLOSES WHEN MICROPROCESSOR DESIRES PULSE START
1MTA13-18
2MTA5-11
SPB2R
2ND BRAKE PRESSURE
TB-17
CLOSES WHEN 2ND. BRAKE NOT RELEASED
SMERB:
EXCURSION
CLOSES WHEN VIBRATION EXCEEDS LIMIT
CLOSES WHEN EXCURSION EXCEEDS LIMIT
SMWVB:
CLOSES WHEN DOOR IS OPEN
SMSD:
SECONDARY DOOR SWITCH SOIL SIDE
SMCD:
SECONDARY DOOR SWITCH CLEAN SIDE.
MOTOR OVERLOAD
ET VS K
FOR 6044SR2/SR3 MODELS ONLY
CRS+
CLOSES WHEN 3-WIRE ENABLED
1MTA13-17
CRSGM
CLOSES WHEN MICROPROCESSOR DESIRES SIGNAL
1MTA13-7
CRPCC
CLOSES WHEN CLEAN SIDE HAS CONTROL
OPENS WHEN CLEAN SIDE HAS CONTROL
CRPLS
CLOSES WHEN SOIL SIDE DOOR IS CLOSED
ELSPS
ILLUMINATED EMERGENCY STOP
ELSPC
ILLUMINATED EMERGENCY STOP
CLOSES WHEN 3-WIRE IS ENERGIZED
ELSG
SIGNAL SOIL SIDE
EBSG
SIGNAL SOIL SIDE
CRSG
SIGNAL SOIL SIDE
VEPPS
DOOR SEAL SOIL SIDE
N/C
SEE W6W5SZEV LINE 09
B
SEE W6W5SZSP LINE 00
J
SEE W6W5SZEV LINE 00
G
CRS+A
START 3-WIRE
CLDCC
CLEAN SIDE DOOR (SLAVE) (RESET) PINS 5/8 IF 11PIN BASE
CLDCD
CLEAN SIDE DOOR (RESET) PINS 5/8 IF 11PIN BASE
CRS+
START 3-WIRE
EMHR
RUN TIME HOUR METER
120VAC
00
01
02
03
04
05
06
07
08
09
W6W5SZS+
2025174B

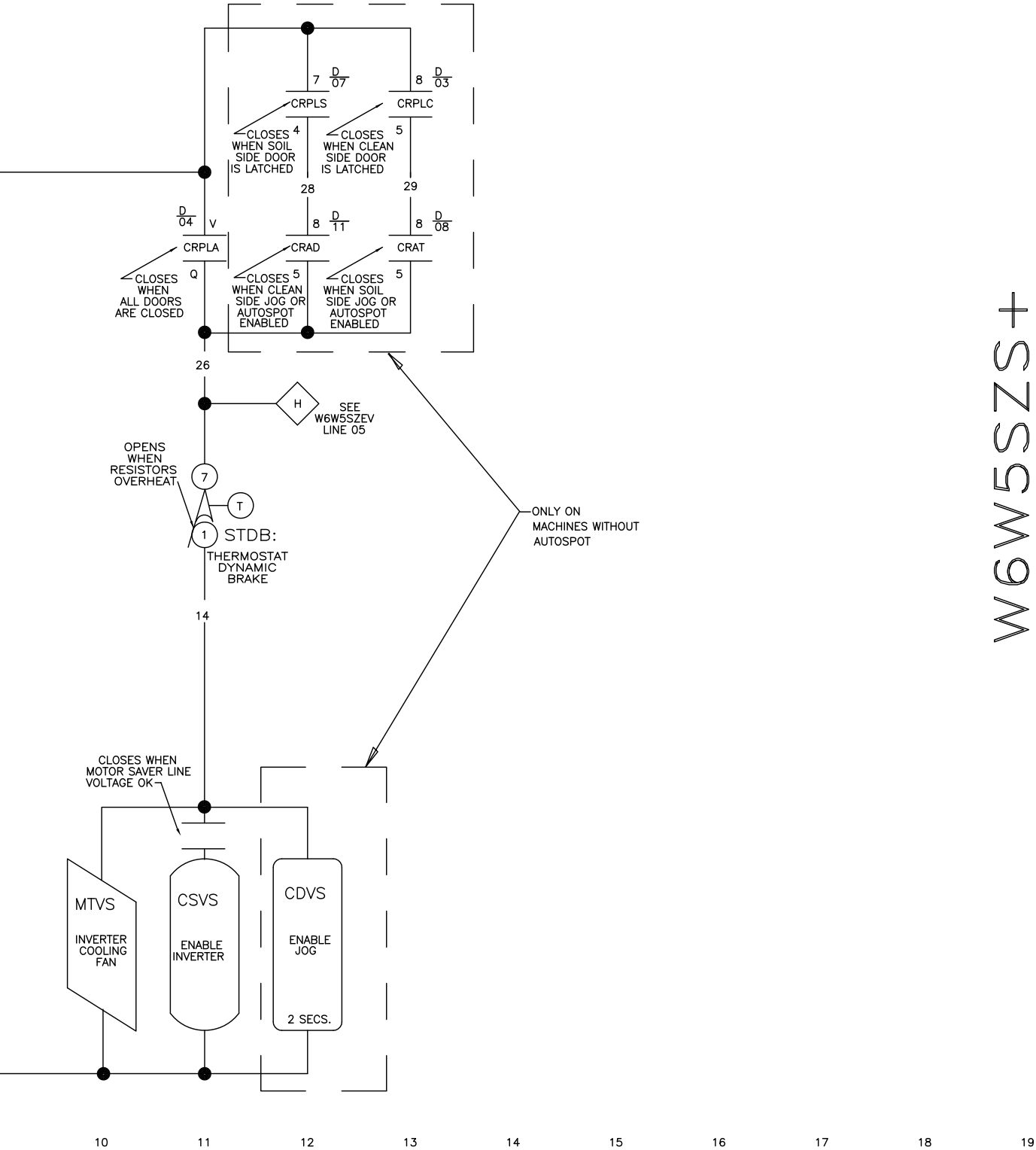


# W6W5SZS+

## MILTOUCH–EX™ CONTROLS

## SCHEMATIC: START CIRCUIT

110V1P50HZ/120V1P60HZ

PELLERIN MILNOR CORPORATION

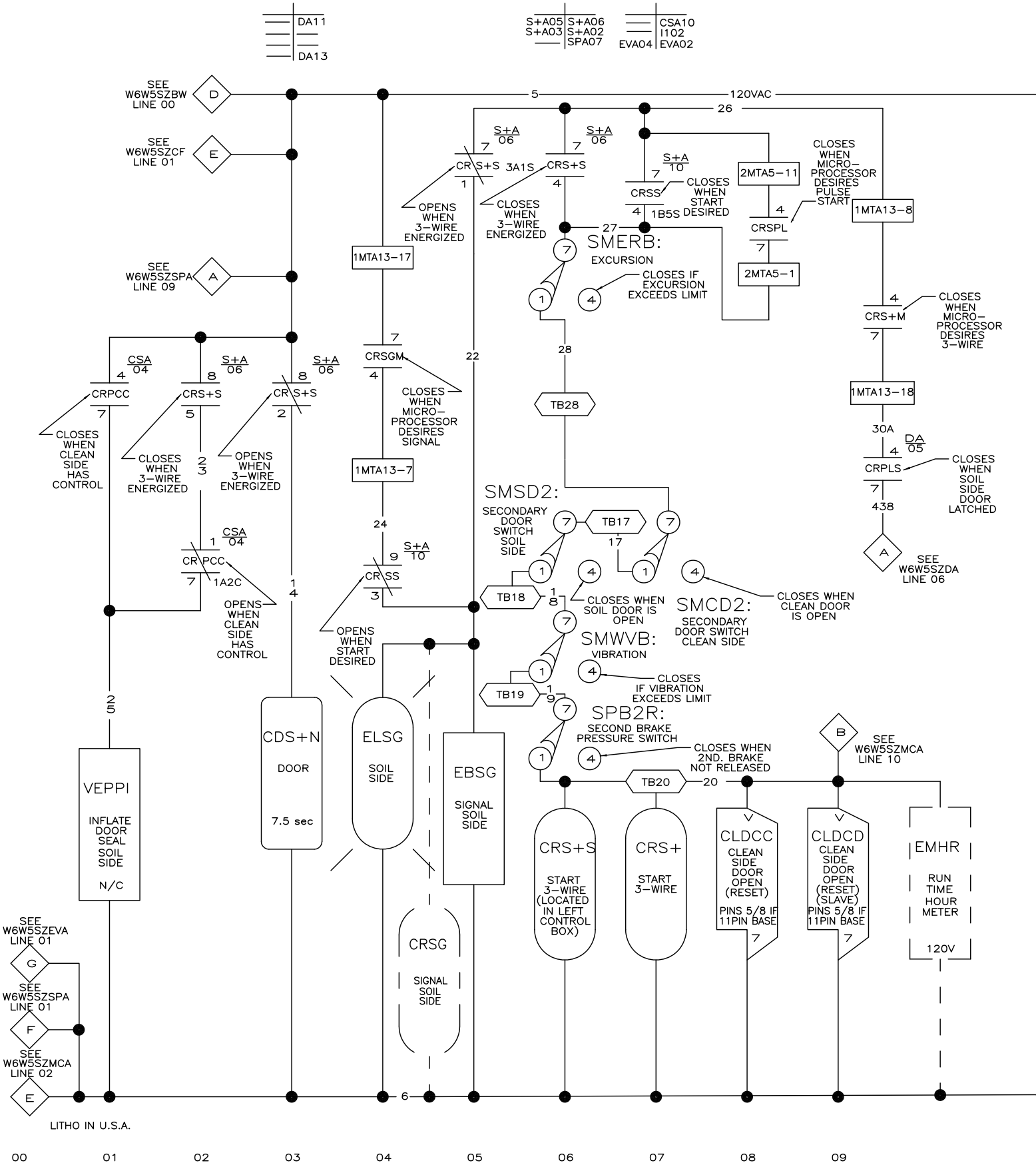


LITHO IN U.S.A.

W6W5SZS+A
2025174B

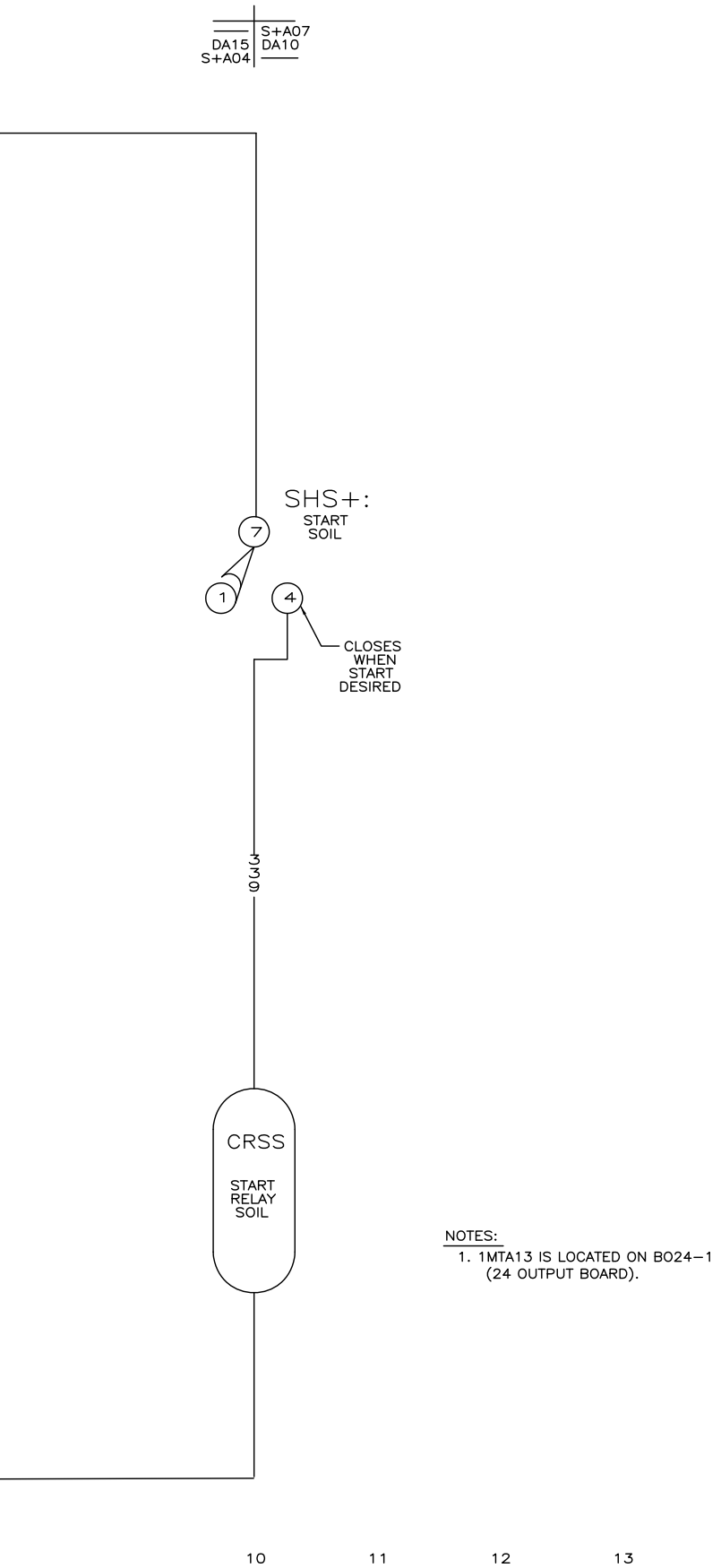


NOTES:

1. 1MTA13 IS LOCATED ON BO24–1 (24 OUTPUT BOARD).

# W6W5SZS+A

MILTOUCH–EX™ CONTROLS
72044 SR2/3 ONLY
SCHEMATIC: START CIRCUIT
110V1P50HZ/120V1P60HZ
PELLERIN MILNOR CORPORATION

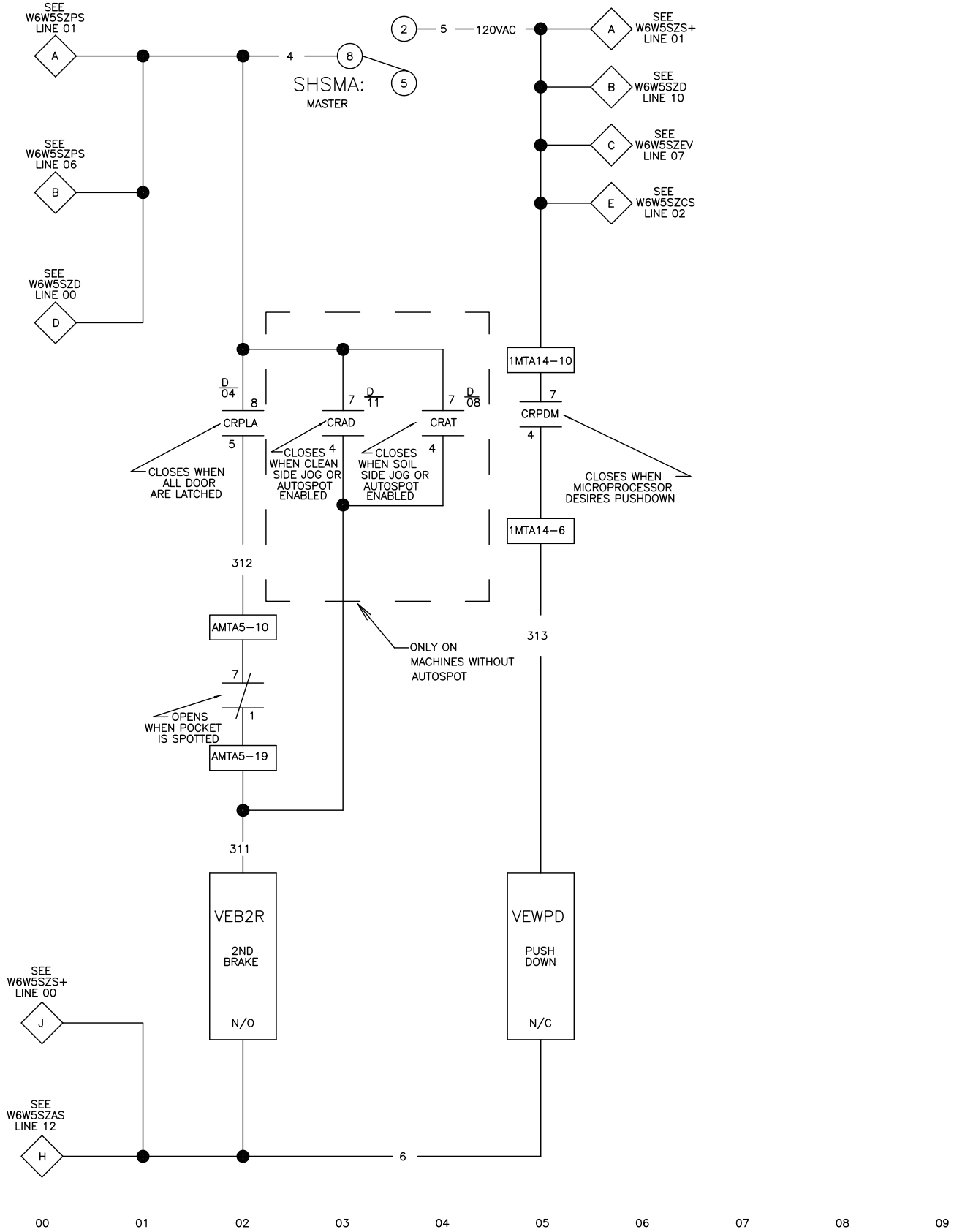


W6W5SZSP
2014152B

10 11 12 13 14 15 16 17 18 19

# W6W5SZSP

## MILTOUCH–EX™ CONTROLS
## SCHEMATIC: MASTER SWITCH

110V1P50HZ/120V1P60HZ

PELLERIN MILNOR CORPORATION

W6W5SZSP
2014152B



W6W5SZSP
2014152B

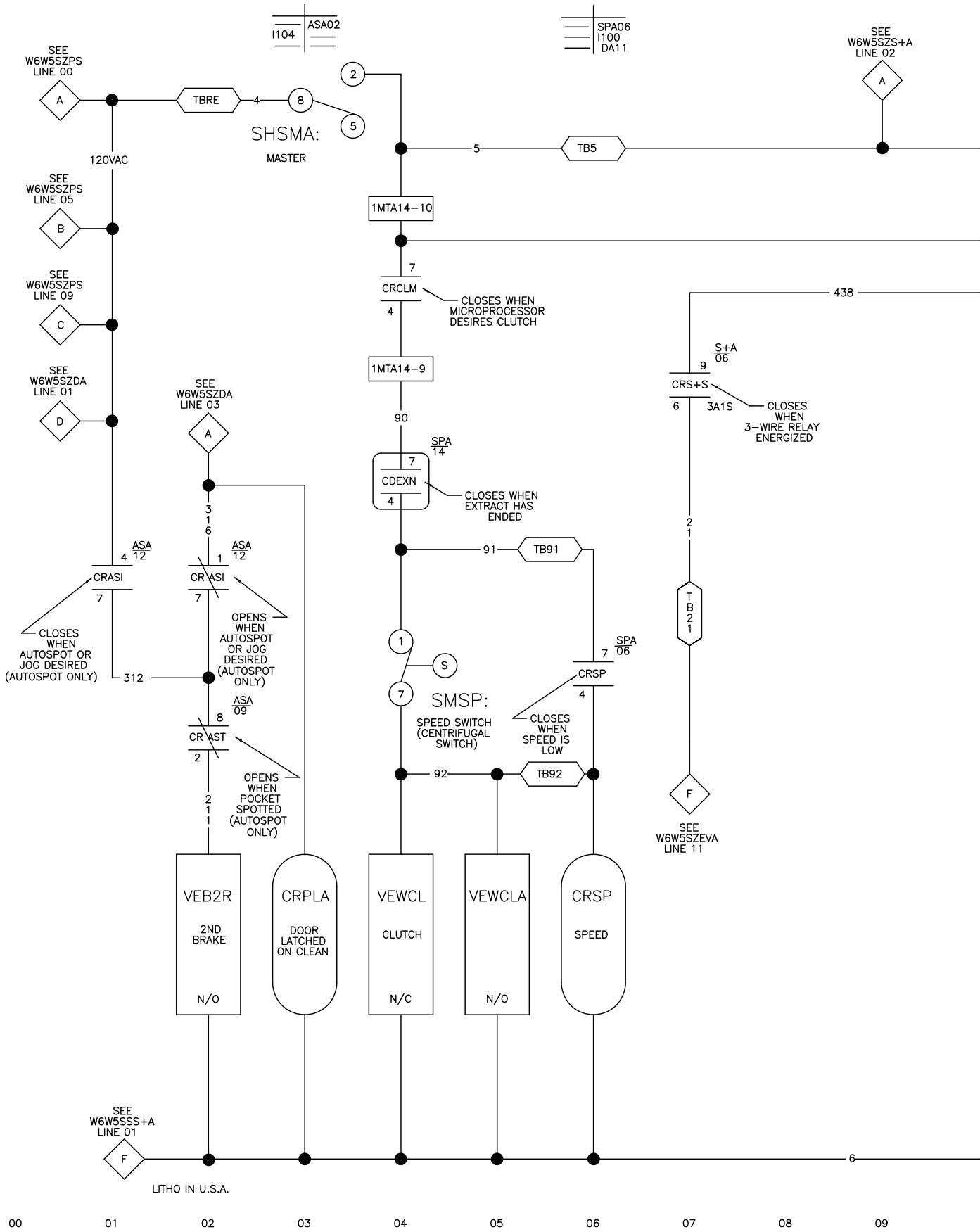


W6W5SZSPA
2022475B

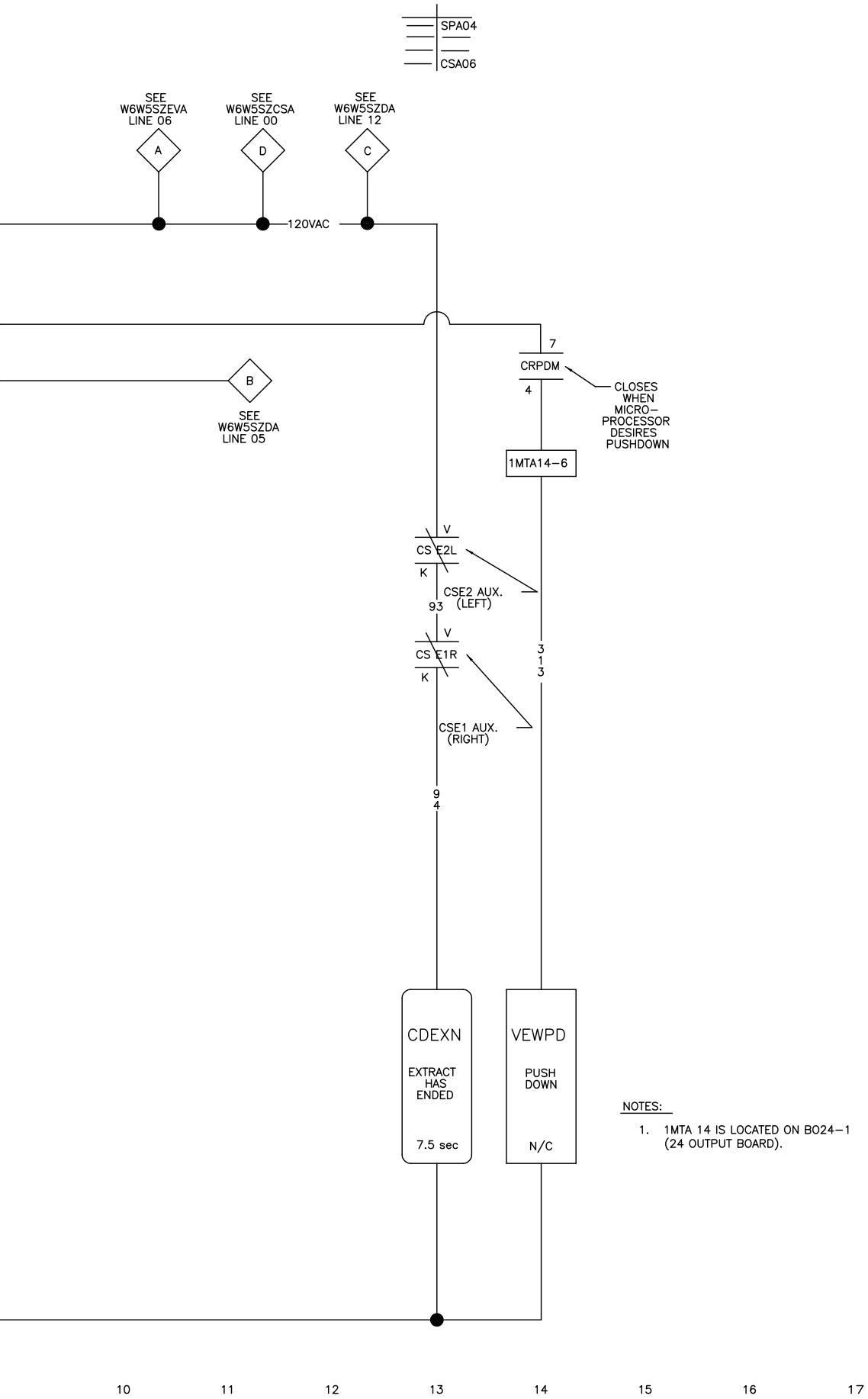


NOTES:

1. 1MTA 14 IS LOCATED ON BO24-1 (24 OUTPUT BOARD).

# W6W5SZSPA

MILTOUCH-EX™ CONTROLS
72044 SR2/3 ONLY
SCHEMATIC: SPEED, DOOR CIRCUITS, & MASTER SWITCH
110V1P50HZ/120V1P60HZ
PELLERIN MILNOR CORPORATION

W6W5SZSPA
2022475B

W6W5SZSPA
2022475B

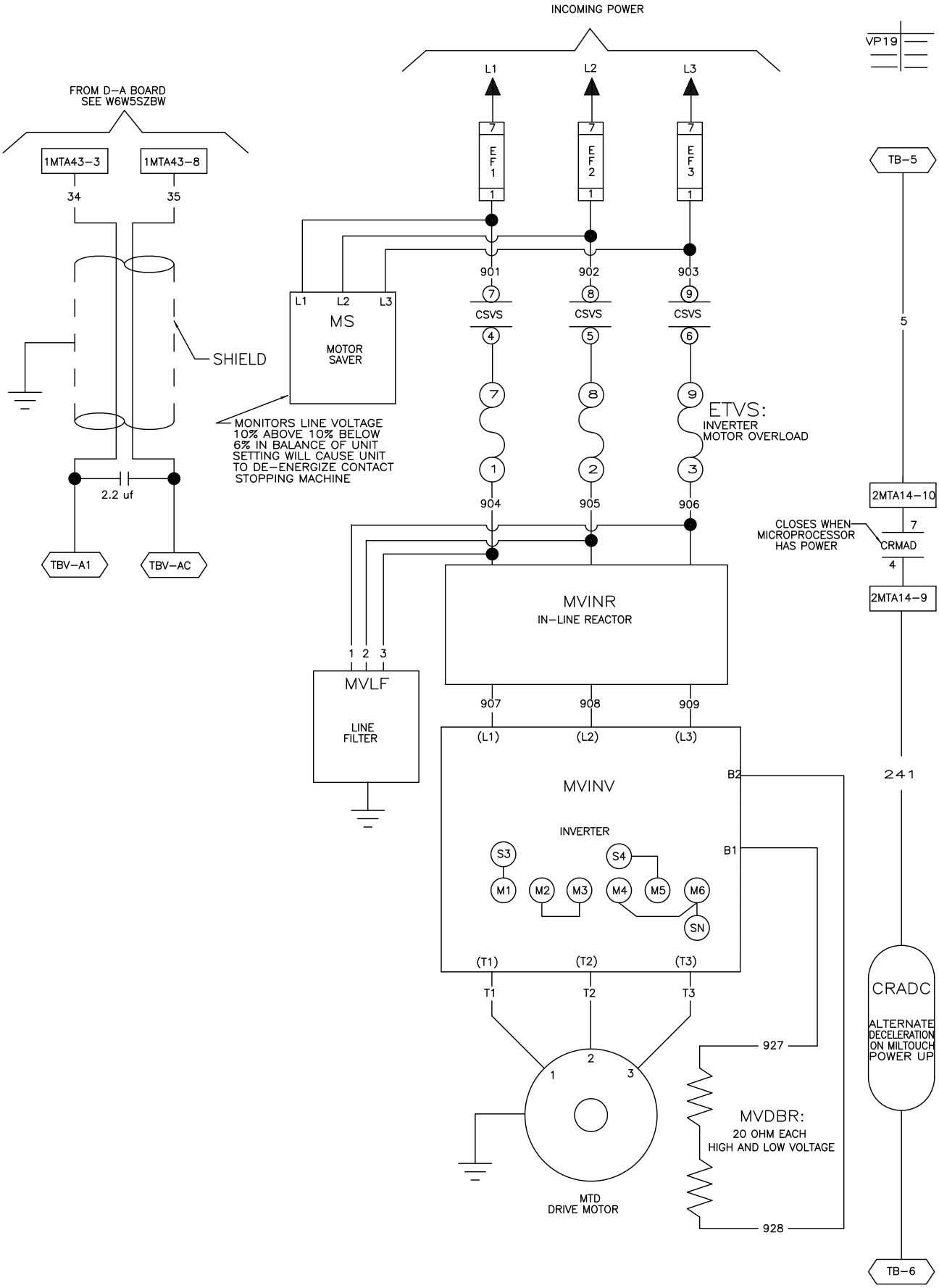


W6W5SZVP
2024502B

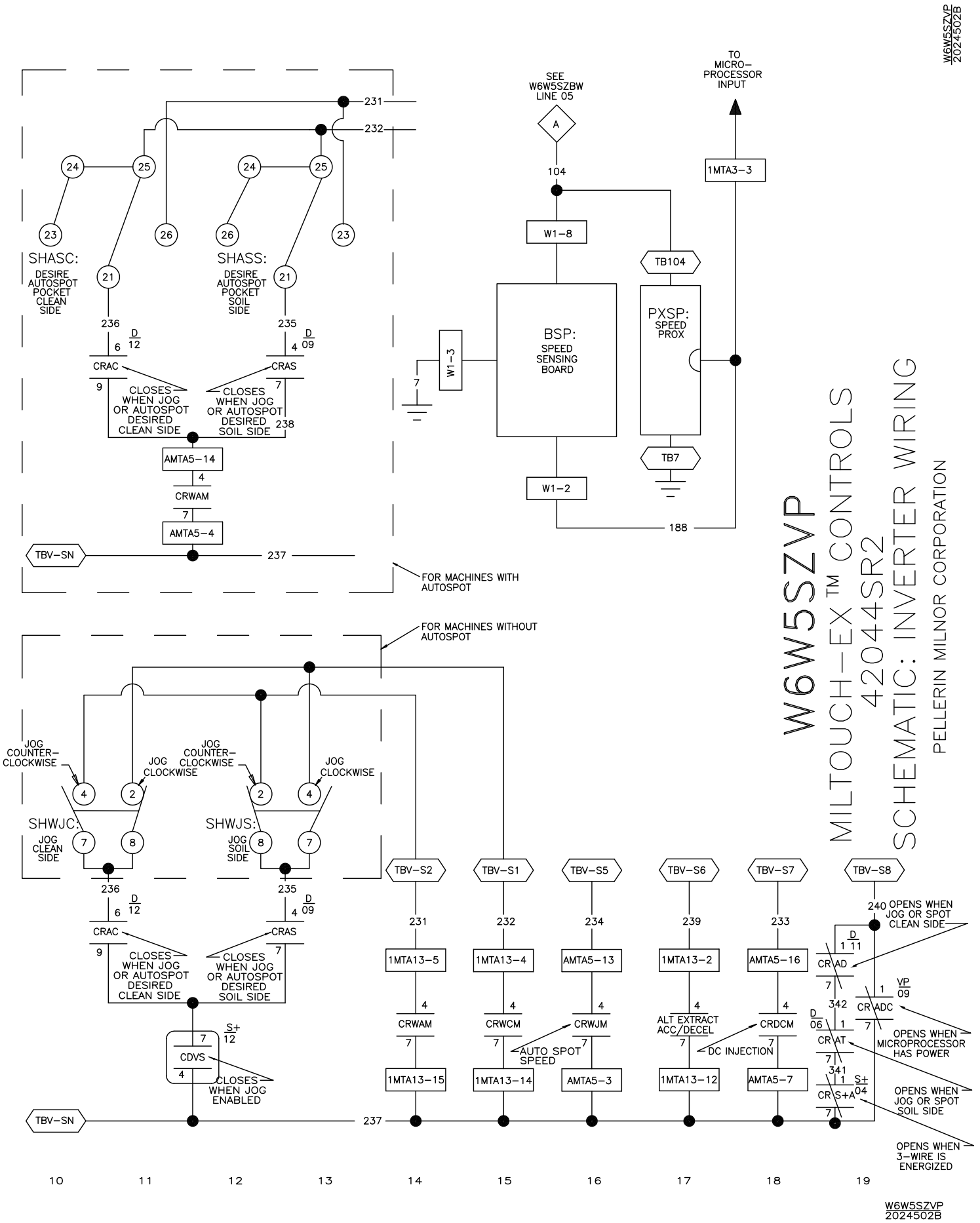
W6W5SZVP
2024502B
TO MICRO-PROCESSOR INPUT
SEE W6W5SZBW LINE 05
A
104
1MTA3-3
W1-8
TB104
SHASC:
DESIRE AUTOSPOT POCKET CLEAN SIDE
SHASS:
DESIRE AUTOSPOT POCKET SOIL SIDE
BSP:
SPEED SENSING BOARD
PXSP:
SPEED PROX
W1-3
TB7
W1-2
188
236
235
CRAC
CRAS
CLOSES WHEN JOG OR AUTOSPOT DESIRED CLEAN SIDE
CLOSES WHEN JOG OR AUTOSPOT DESIRED SOIL SIDE
238
AMTA5-14
CRWAM
AMTA5-4
TBV-SN
237
FOR MACHINES WITH AUTOSPOT
FOR MACHINES WITHOUT AUTOSPOT
JOG COUNTER-CLOCKWISE
JOG CLOCKWISE
SHWJC:
JOG CLEAN SIDE
SHWJS:
JOG SOIL SIDE
CDVS
CLOSES WHEN JOG ENABLED
TBV-S2
TBV-S1
TBV-S5
TBV-S6
TBV-S7
TBV-S8
231
232
234
239
233
1MTA13-5
1MTA13-4
AMTA5-13
1MTA13-2
AMTA5-16
CRWCM
CRWJM
CRDCM
AUTO SPOT SPEED
ALT EXTRACT ACC/DECEL
DC INJECTION
1MTA13-15
1MTA13-14
AMTA5-3
1MTA13-12
AMTA5-7
240 OPENS WHEN JOG OR SPOT CLEAN SIDE
CR AD
CR ADC
CR AT
CR S+A
342
341
OPENS WHEN MICROPROCESSOR HAS POWER
OPENS WHEN JOG OR SPOT SOIL SIDE
OPENS WHEN 3-WIRE IS ENERGIZED
10
11
12
13
14
15
16
17
18
19
W6W5SZVP
MILTOUCH-EX TM CONTROLS
420 44SR2
SCHEMATIC: INVERTER WIRING
PELLERIN MILNOR CORPORATION
W6W5SZVP
2024502B

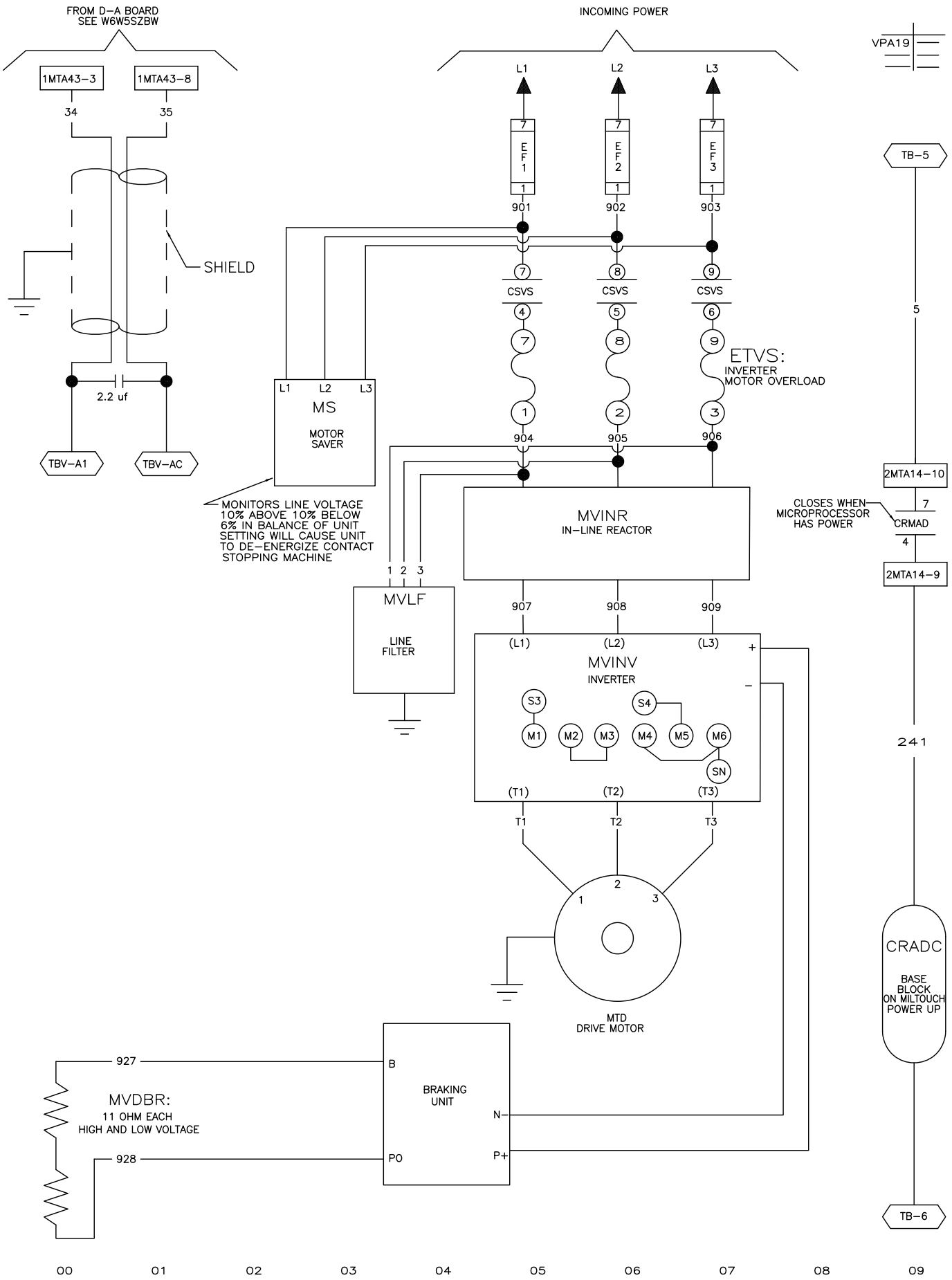


W6W5SZVPA
2024502B

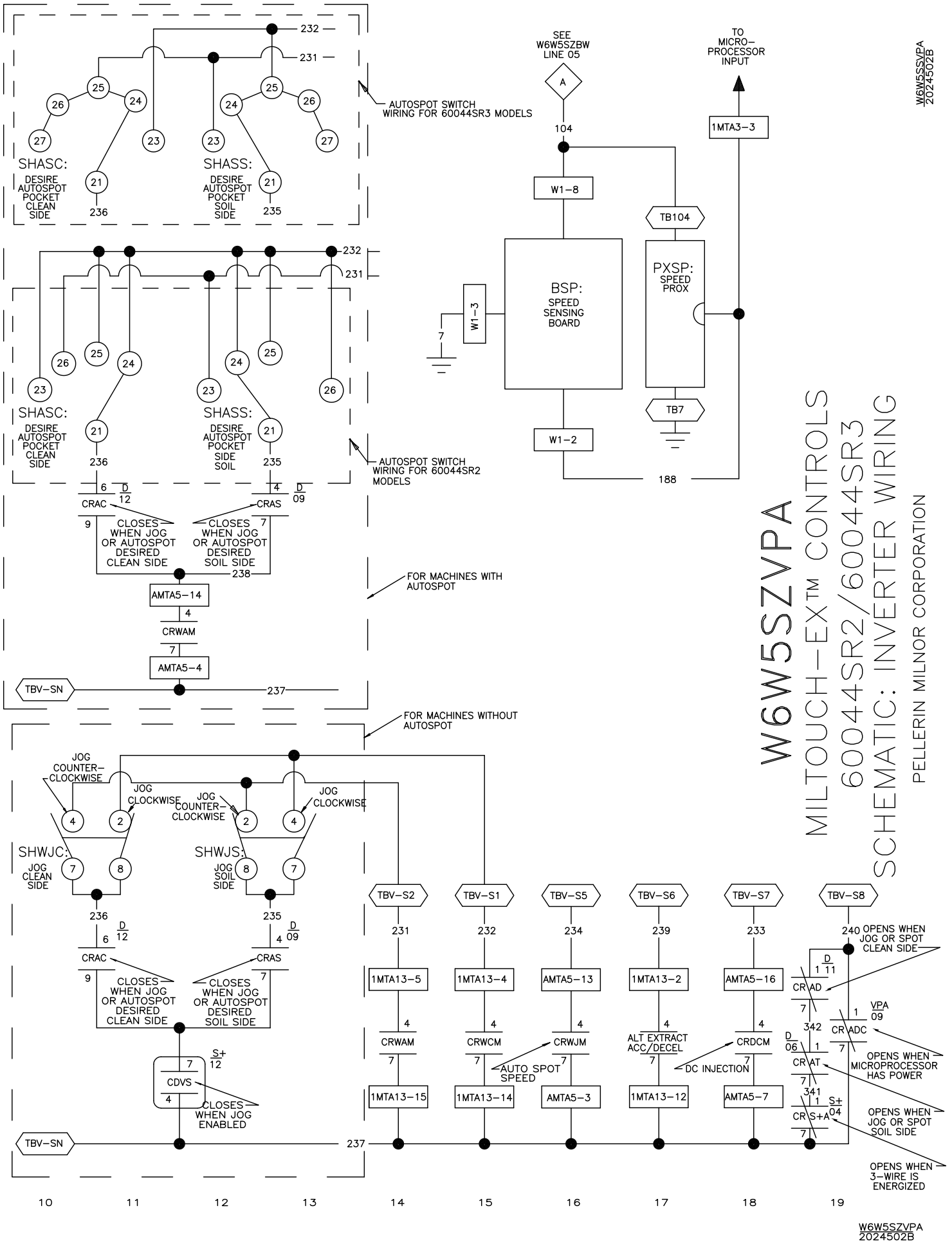
W6W5SZVPA
MILTOUCH-EX™ CONTROLS
60044SR2/60044SR3
SCHEMATIC: INVERTER WIRING
PELLERIN MILNOR CORPORATION
W6W5SSVPA
2024502B
SEE W6W5SZBW LINE 05
TO MICRO-PROCESSOR INPUT
AUTOSPOT SWITCH WIRING FOR 60044SR3 MODELS
AUTOSPOT SWITCH WIRING FOR 60044SR2 MODELS
SHASC: DESIRE AUTOSPOT POCKET CLEAN SIDE
SHASS: DESIRE AUTOSPOT POCKET SOIL SIDE
BSP: SPEED SENSING BOARD
PXSP: SPEED PROX
CRAC
CRAS
CLOSES WHEN JOG OR AUTOSPOT DESIRED CLEAN SIDE
CLOSES WHEN JOG OR AUTOSPOT DESIRED SOIL SIDE
FOR MACHINES WITH AUTOSPOT
FOR MACHINES WITHOUT AUTOSPOT
JOG COUNTER-CLOCKWISE
JOG CLOCKWISE
SHWJC: JOG CLEAN SIDE
SHWJS: JOG SOIL SIDE
CDVS
CLOSES WHEN JOG ENABLED
TBV-S2
TBV-S1
TBV-S5
TBV-S6
TBV-S7
TBV-S8
OPENS WHEN JOG OR SPOT CLEAN SIDE
OPENS WHEN MICROPROCESSOR HAS POWER
OPENS WHEN JOG OR SPOT SOIL SIDE
OPENS WHEN 3-WIRE IS ENERGIZED
AUTO SPOT SPEED
ALT EXTRACT ACC/DECEL
DC INJECTION
W6W5SZVPA
2024502B