Published Manual Number/ECN: ME6UTCS1BE/2024462A
- **Publishing System: TPAS2**
- **Access date: 11/12/2024**
- **Document ECNs: Latest**

Schematic/Electrical Parts

MultiTrac™
P.C. Device Master/
Linear Costa Master
Mark 5 Controls

Read the separate safety manual before installing, operating, or servicing

PELLERIN MILNOR CORPORATION POST OFFICE BOX 400, KENNER, LOUISIANA 70063-0400, U.S.A.

Table of Contents
ME6UTCS1BE/24462A

Page	Description	Document
1	Component Parts List	W6UT5PL/2019273N
13	Limited Standard Warranty	BMP720097/2019036
14	How to Get the Necessary Repair Components	BIUUUD19/20081231
15	How to Use Milnor® Electrical Schematic Diagrams	BIUUUK01/20130308
28	Sample Schematic	BMP010012/2018343
30	On-Site Control Connections for Device Master, PC Device Master, Linear Costa & Linear Costa Master	BIYCDI01/20021226
33	3 Phase Motor Connection Diagram	BMP850029/1999362B
34	3P Motor Diagram-Multivolt	W80008/2001253A
35	**1. MultiTrac Console**	
36	Control Box Layouts Sheet 1	W6UT4TG1/2011353B
38	Control Box Layouts Sheet 2	W6UT4TG2/2012235B
40	Control Box Layouts Sheet 3	W6UT4TG3/2024462B
42	MultiTrac Drynet Controls	W6UT4MD/2004364B
44	MultiTrac Console P.C. before 7-1-2011	W6UT4MT/2017203B
46	MultiTrac Console P.C. after 7-1-2011	W6UT4MTA/2019273B
48	MultiTrac/Miltrac Printers	W6UT5TP/2007155B
51	**2. Device Master Option**	
52	MultiTrac P.C. Device Master	W6DM4BWB/2012235B
54	Cake Breaker	W6DM5CB1/2018462B
56	Cake Breaker Outputs	W6DM5CB2/2019033B
58	Device Finished Discharging (24 Outputs)	W6DM5DF/2007155B
60	Extend Belt to Load 8Out/16Input Board	W6DM5EB/2007155B
62	Flag Down 8Out/ 16Input Board	W6DM5FD/2007155B
64	Belt Controls for Loading Belt	W6DM4FP/2012235B
66	Belt Controls for Loading Belt	W6DM4FQ/2012235B
68	Belt 0 Controls Forward/Reverse	W6DM5FR0/2023383B
70	Belt 1 Controls Forward/Reverse	W6DM5FR1/2023383B
72	Belt 2 Controls Forward/Reverse	W6DM5FR2/2023383B
74	Belt 3 Controls Forward/Reverse	W6DM5FR3/2023383B
76	Belt 4 Controls Forward/Reverse	W6DM5FR4/2023383B
78	Belt 5 Controls Forward/Reverse	W6DM5FR5/2023383B
80	Belt 6 Controls Forward/Reverse	W6DM5FR6/2023195B
82	Belt 7 Controls Forward/Reverse	W6DM5FR7/2023195B
84	Belt 8 Controls Forward/Reverse	W6DM5FR8/2023195B
86	Belt 9 Controls Forward/Reverse	W6DM5FR9/2023195B
88	Belt 10 Controls Forward/Reverse	W6DM5FRA/2023195B
90	Belt 11 Controls Forward/Reverse	W6DM5FRB/2023195B

Table of Contents, continued
ME6UTCS1BE/24462A

Page	Description	Document
92	Belt 12 Controls Forward/Reverse	W6DM5FRC/2023195B
94	Belt 13 Controls Forward/Reverse	W6DM5FRD/2023195B
96	Belt 14 Controls Forward/Reverse	W6DM5FRE/2023195B
98	Belt 15 Controls Forward/Reverse	W6DM5FRF/2023195B
100	Typical Slave Belt Cntrls Forward/Reverse	W6DM5FRS/2019303B
102	VAMC Modifications	W6DM5FRVA/2018456B
104	Feeder / Sequencer Belt 5	W6DM4FS5/2019303B
106	Feeder / Sequencer Belt 6	W6DM4FS6/2019303B
108	Load Waiting - Different Customer	W6DM5LW/2007155B
110	Typical Belt Motor Wiring	W6DM4MR/2017463B
112	600V-480V Step Down Inverter Drive Only	W6DM4MR6/2019444B
114	Loading Belt Lights	W6DM4RR/2012235B
116	Start Circuit	W6DM5S+/2012235B
118	Special Board Wiring	W6DM4SB/2012235B
120	Rormulas, Dry Codes, and Destination Codes	W6DM4SD/2000336B
122	Remote Formula Select Switch	W6DM4SF/2000336B
124	Belt 1 Controls Forward/Reverse COHORP	WINSFR1A/2024062B
126	COHORP Controls	WINSFR1B/2024062B
129	**3. Device Master Allied Interfaces**	
130	Device Master - Allied Dryer Interface	BICALC16/20050607
134	Allied Interface-Linear Costa Board 1	W6DM5AI1/2007155B
136	Allied Interface-Linear Costa Board 2	W6DM5AI2/2007155B
138	Allied Interface-Weight Inputs	W6DM5DI/2007155B
140	Data Pass Dry Contacts	W6DM5DP/2007155B
142	Allied Weight Outputs	W6DM5DW/2007155B
144	Inputs/Outputs-Dryer controlled by Device Master	W6DM5I/2007155B

COMPONENT PARTS LIST

W6UT5PL/2019273N

COMPONENT NUMBER	FUNCTION OF THIS COMPONENT	WHERE TO FIND THIS COMPONENT	MILNOR P/N	DESCRIPTION	LOCATION
	>>>CONTROL BOX LAYOUTS				
001	DETAIL-CONSOLE REAR W/O DEVICE MST	W6UT4TG1	B2T2002034	TAG:MULTITRAC REAR PANEL	CONSOLE REAR
002	DETAIL-CONSOLE FNT W/O DEVICE MST	W6UT4TG1	B2T2002035	TAG:MULTITRAC FRONT PANEL	CONSOLE FRNT
003	DETAIL-CONSOLE REAR W/ DEVICE MSTR	W6UT4TG2	B2T2002003	P.C.DEV MSTR CONSOLE REAR PNL	CONSOLE REAR
004	DETAIL-CONSOLE FNT W/ DEVICE MSTR	W6UT4TG2	B2T2002004	P.C.DEV MSTR CONSOLE FRNT PNL	CONSOLE REAR
005	DETAIL-BELT CONTACTOR BOX	W6UT4TG3	B2T2009010	TAG: SLAVE CONTACTOR BOX	BELT C-BOX
006	DETAIL-BELT CONTACTOR BOX	W6UT4TG3	B2T2009011	MASTER CONTACT BOX CONVEY	BELT C-BOX
007	DETAIL-BELT CONTACTOR BOX	W6UT4TG3	B2T2011001	CONVEYOR CONTACTOR BOX (MASTER)	BELT C-BOX
008	DETAIL-BELT CONTACTOR BOX	W6UT4TG3	B2T2011002	CONVERYOR CONTROL BOX (SLAVE)	BELT C-BOX
BA	**>>BOARDS**				
BIO-1	BOARD-8OUTPUT/16INPUT #1	W6DM4BWB	08BS816CT	BD:SERIAL 8OUT-16INPUT-TEST	CARD CAGE
BIO-16	BOARD-8OUTPUT/16INPUT	W6DM4EB	08BS816CT	BD:SERIAL 8OUT-16INPUT-TEST	CARD CAGE
BIO-2	BOARD-8OUTPUT/16INPUT #2	W6DM4BWB	08BS816CT	BD:SERIAL 8OUT-16INPUT-TEST	CARD CAGE
BIO-5	BOARD-8OUTPUT/16INPUT #3	W6DM4FD	08BS816CT	BD:SERIAL 8OUT-16INPUT-TEST	CARD CAGE
BMTH-1	BOARD-8 CARD MOTHER	W6DM5CB2	08BS8MTHAT	BD:SERIAL 8 CARD MOTHER-TEST	CARD CAGE
BO24-1	BOARD-24 OUTPUT BOARD	W6DM4LW	08BSO24AT	BD:SERIAL 24 OUTPUT->TEST	CARD CAGE
BO24-10	BOARD-24 OUTPUT DEVICE FINISHED DISCH	W6DM4DF	08BSO24AT	BD:SERIAL 24 OUTPUT->TEST	CARD CAGE
BO24-2	BOARD-24 OUTPUT DATA PASS	W6DM4DP	08BSO24AT	BD:SERIAL 24 OUTPUT->TEST	CARD CAGE
BO24-2	BOARD-24 OUTPUT DATA PASS	W6DM4DW	08BSO24AT	BD:SERIAL 24 OUTPUT->TEST	CARD CAGE
BO24-5	BOARD-24 OUTPUT	W6DM5CB2	08BSO24AT	BD:SERIAL 24 OUTPUT->TEST	CARD CAGE
BPB	BOARD-186 MICROPROCESSOR	W6DM4BWB	08BSPE1T	186 SER PROC-TEST	CONTROLLER BX
BPC	COMPUTER-MULTI-TRAC	W6UT4MT	ECBW11SSPC	PC-SIEMANS PC WITH SERIAL CARD	CONSOLE TOP
BPC	COMPUTER-MULTI-TRAC	W6UT4MTA	ECBW12SSPC	ASSY SIMATIC IPC427C W/ SERIAL CARD	CONSOLE TOP
CD	**>>RELAY-TIME DELAY**				
CD1	DELAY-DEVICE ACCEPTS LOAD	W6DM4AD	09CF016037	TDR F16S 2PDT 11PIN 120V50/60C	CONTROL BOX
CDL	DELAY-BELT LOADED	W6DM4SB	09CF002037	TDR F2S 2PDT 11PIN 120V60/50C	CONTROLLER BX
CLL	LATCH-BELT DESIRES LOAD	W6DM4AD	09CL2C-C37	RELAY-LATCH DPDT 120V 2-COIL	CONTROL BOX
CP	**>>PHOTOEYES**				
CHCHP	PHOTOEYE-COHORP LOADED	WINSFR1B	09RPE011	PHOTOEYE VALU-BEAM 10-30DC	BELT CONTROLR
CPPEF	PHOTOEYE-DISCHARGE END OF BELT	W6DM4FP	09RPE004	SENSOR DARK OPERATE AC N/O-OUT	LOADING BELT
CPPEF	PHOTOEYE-FORWARD	W6DM4SB	09RPE004	SENSOR DARK OPERATE AC N/O-OUT	ON BELT
CPPEF	PHOTOEYE-BELT 1 DISCHARGE-FWR	WINSFR1A	09RPE011	PHOTOEYE VALU-BEAM 10-30DC	END OF BELT
CPPER	PHOTOEYE-BELT 1 LOAD-REV	WINSFR1A	09RPE011	PHOTOEYE VALU-BEAM 10-30DC	END OF BELT

COMPONENT PARTS LIST

COMPONENT NUMBER	FUNCTION OF THIS COMPONENT	WHERE TO FIND THIS COMPONENT	MILNOR P/N	DESCRIPTION	LOCATION
CPPEF0	PHOTOEYE-BELT 0 FORWARD	W6DM4FR0	09RPE011	PHOTOEYE VALU-BEAM 10-30DC	END OF BELT
CPPEF1	PHOTOEYE-BELT 1 FORWARD	W6DM4FR1	09RPE011	PHOTOEYE VALU-BEAM 10-30DC	END OF BELT
CPPEF2	PHOTOEYE-BELT 2 FORWARD	W6DM4FR2	09RPE011	PHOTOEYE VALU-BEAM 10-30DC	END OF BELT
CPPEF3	PHOTOEYE-BELT 3 FORWARD	W6DM4FR3	09RPE011	PHOTOEYE VALU-BEAM 10-30DC	END OF BELT
CPPEF4	PHOTOEYE-BELT 4 FORWARD	W6DM4FR4	09RPE011	PHOTOEYE VALU-BEAM 10-30DC	END OF BELT
CPPEF5	PHOTOEYE-BELT 5 FORWARD	W6DM4FR5	09RPE011	PHOTOEYE VALU-BEAM 10-30DC	END OF BELT
CPPEF6	PHOTOEYE-BELT 6 FORWARD	W6DM4FR6	09RPE011	PHOTOEYE VALU-BEAM 10-30DC	END OF BELT
CPPEF7	PHOTOEYE-BELT 7 FORWARD	W6DM4FR7	09RPE011	PHOTOEYE VALU-BEAM 10-30DC	END OF BELT
CPPEF8	PHOTOEYE-BELT 8 FORWARD	W6DM4FR8	09RPE011	PHOTOEYE VALU-BEAM 10-30DC	END OF BELT
CPPEF9	PHOTOEYE-BELT 9 FORWARD	W6DM4FR9	09RPE011	PHOTOEYE VALU-BEAM 10-30DC	END OF BELT
CPPEFA	PHOTOEYE-BELT A FORWARD	W6DM4FRA	09RPE011	PHOTOEYE VALU-BEAM 10-30DC	END OF BELT
CPPEFB	PHOTOEYE-BELT B FORWARD	W6DM4FRB	09RPE011	PHOTOEYE VALU-BEAM 10-30DC	END OF BELT
CPPEFC	PHOTOEYE-BELT C FORWARD	W6DM4FRC	09RPE011	PHOTOEYE VALU-BEAM 10-30DC	END OF BELT
CPPEFD	PHOTOEYE-BELT D FORWARD	W6DM4FRD	09RPE011	PHOTOEYE VALU-BEAM 10-30DC	END OF BELT
CPPEFE	PHOTOEYE-BELT E FORWARD	W6DM4FRE	09RPE011	PHOTOEYE VALU-BEAM 10-30DC	END OF BELT
CPPEFF	PHOTOEYE-BELT F FORWARD	W6DM4FRF	09RPE011	PHOTOEYE VALU-BEAM 10-30DC	END OF BELT
CPPER0	PHOTOEYE-BELT 0 REVERSE	W6DM4FR0	09RPE011	PHOTOEYE VALU-BEAM 10-30DC	END OF BELT
CPPER1	PHOTOEYE-BELT 1 REVERSE	W6DM4FR1	09RPE011	PHOTOEYE VALU-BEAM 10-30DC	END OF BELT
CPPER2	PHOTOEYE-BELT 2 REVERSE	W6DM4FR2	09RPE011	PHOTOEYE VALU-BEAM 10-30DC	END OF BELT
CPPER3	PHOTOEYE-BELT 3 REVERSE	W6DM4FR3	09RPE011	PHOTOEYE VALU-BEAM 10-30DC	END OF BELT
CPPER4	PHOTOEYE-BELT 4 REVERSE	W6DM4FR4	09RPE011	PHOTOEYE VALU-BEAM 10-30DC	END OF BELT
CPPER5	PHOTOEYE-BELT 5 REVERSE	W6DM4FR5	09RPE011	PHOTOEYE VALU-BEAM 10-30DC	END OF BELT
CPPER6	PHOTOEYE-BELT 6 REVERSE	W6DM4FR6	09RPE011	PHOTOEYE VALU-BEAM 10-30DC	END OF BELT
CPPER7	PHOTOEYE-BELT 7 REVERSE	W6DM4FR7	09RPE011	PHOTOEYE VALU-BEAM 10-30DC	END OF BELT
CPPER8	PHOTOEYE-BELT 8 REVERSE	W6DM4FR8	09RPE011	PHOTOEYE VALU-BEAM 10-30DC	END OF BELT
CPPER9	PHOTOEYE-BELT 9 REVERSE	W6DM4FR9	09RPE011	PHOTOEYE VALU-BEAM 10-30DC	END OF BELT
CPPERA	PHOTOEYE-BELT A REVERSE	W6DM4FRA	09RPE011	PHOTOEYE VALU-BEAM 10-30DC	END OF BELT
CPPERB	PHOTOEYE-BELT B REVERSE	W6DM4FRB	09RPE011	PHOTOEYE VALU-BEAM 10-30DC	END OF BELT
CPPERC	PHOTOEYE-BELT C REVERSE	W6DM4FRC	09RPE011	PHOTOEYE VALU-BEAM 10-30DC	END OF BELT
CPPERD	PHOTOEYE-BELT D REVERSE	W6DM4FRD	09RPE011	PHOTOEYE VALU-BEAM 10-30DC	END OF BELT
CPPERE	PHOTOEYE-BELT E REVERSE	W6DM4FRE	09RPE011	PHOTOEYE VALU-BEAM 10-30DC	END OF BELT
CPPERF	PHOTOEYE-BELT F REVERSE	W6DM4FRF	09RPE011	PHOTOEYE VALU-BEAM 10-30DC	END OF BELT
CPPSB5	PHOTOEYE-FEEDER BELT #5	W6DM4FS5	09RPE011	PHOTOEYE VALU-BEAM 10-30DC	FEEDER BELT

COMPONENT PARTS LIST

COMPONENT NUMBER	FUNCTION OF THIS COMPONENT	WHERE TO FIND THIS COMPONENT	MILNOR P/N	DESCRIPTION	LOCATION
CPPSB6	PHOTOEYE-FEEDER BELT #6	W6DM4FS6	09RPE011	PHOTOEYE VALU-BEAM 10-30DC	FEEDER BELT
CPRD	PHOTOEYE-DISCHARGE END	W6DM4AD	09RPE004	SENSOR DK.OPR.AC N/O-OUT	SIDE OF BELT
CR	**>>RELAY-PILOT OR CONTROL**				
CRCBK	RELAY-CAKE BREAKER	W6DM5CB1	09C024D37	4PDT "KH" 110/120V	CONTROLLER BX
CRCD	RELAY-MOVE COHORP DISCHARGE	WINSFR1B	09C024D37	4PDT "KH" 110/120V	BELT CONTROLR
CRCH	RELAY-MOVE COHORP HOME	WINSFR1B	09C024D37	4PDT "KH" 110/120V	BELT CONTROLR
CRCHP	RELAY-COHORP LOADED	WINSFR1B	09C024E24	RELAY 4PDT DIFGLD 14PIN 24DC	BELT CONTROLR
CRD	RELAY-DISCHARGE END BLOCKED	W6DM4AD	09C01DDD37	RELAY-3PDT DIFGOLD 11PIN 120VAC	CONTROL BOX
CRD	RELAY-DATA VALID BELT LOADED	W6DM4FQ	09C024D37	4PDT "KH" 110/120V	LOADING BELT
CRD	RELAY-DATA VALID	W6DM4SB	09C024D37	4PDT "KH" 110/120V	CONTROLLER BX
CRD	RELAY-COHORP AT DISCHARGE	WINSFR1B	09C024D37	4PDT "KH" 110/120V	BELT CONTROLR
CRDL	RELAY-BELT DESIRES LOAD	W6DM4FQ	09C024D37	4PDT "KH" 110/120V	LOADING BELT
CRDS	RELAY-DATA VALID BELT LOADED	W6DM4FQ	09C024D37	4PDT "KH" 110/120V	LOADING BELT
CRFL	RELAY-BELT FINISHED UNLOADING	W6DM4SB	09C024D37	4PDT "KH" 110/120V	CONTROLLER BX
CRH	RELAY-COHORP IS HOME	WINSFR1B	09C024D37	4PDT "KH" 110/120V	BELT CONTROLR
CRL	RELAY-BELT IS LOADED	W6DM4FQ	09C024D37	4PDT "KH" 110/120V	LOADING BELT
CRLLS	RELAY-BELT IS LOADED	W6DM4FQ	09C024D37	4PDT "KH" 110/120V	LOADING BELT
CRLM	RELAY-DESIRES LOAD	W6DM4FQ	09C024D37	4PDT "KH" 110/120V	LOADING BELT
CRLP	RELAY-BELT IN LOAD POSITION	W6DM4FQ	09C024D37	4PDT "KH" 110/120V	LOADING BELT
CRM	RELAY-MANUAL ENABLE	W6DM4FQ	09C024D37	4PDT "KH" 110/120V	LOADING BELT
CRMS	RELAY-MANUAL ENABLE	W6DM4FQ	09C024D37	4PDT "KH" 110/120V	LOADING BELT
CRPEF	RELAY-DISCHARGE END OF BELT	W6DM4FP	09C024D37	4PDT "KH" 110/120V	LOADING BELT
CRPEF	RELAY-FORWARD PHOTOEYE	W6DM4SB	09C024D37	4PDT "KH" 110/120V	CONTROLLER BX
CRPEF	RELAY-DISCHARGE PHOTOEYE BELT 1	WINSFR1A	09C024E24	RELAY 4PDT DIFGLD 14PIN 24DC	BELT CONTROLR
CRRBF0	RELAY-RUN BELT 0 FORWARD	W6DM4FR0	09C024D37	4PDT "KH" 110/120V	CONTROLLER BX
CRRBF1	RELAY-RUN BELT 1 FORWARD	W6DM4FR1	09C024D37	4PDT "KH" 110/120V	CONTROLLER BX
CRRBF2	RELAY-RUN BELT 2 FORWARD	W6DM4FR2	09C024D37	4PDT "KH" 110/120V	CONTROLLER BX
CRRBF3	RELAY-RUN BELT 3 FORWARD	W6DM4FR3	09C024D37	4PDT "KH" 110/120V	CONTROLLER BX
CRRBF4	RELAY-RUN BELT 4 FORWARD	W6DM4FR4	09C024D37	4PDT "KH" 110/120V	CONTROLLER BX
CRRBF5	RELAY-RUN BELT 5 FORWARD	W6DM4FR5	09C024D37	4PDT "KH" 110/120V	CONTROLLER BX
CRRBF6	RELAY-RUN BELT 6 FORWARD	W6DM4FR6	09C024D37	4PDT "KH" 110/120V	CONTROLLER BX
CRRBF7	RELAY-RUN BELT 7 FORWARD	W6DM4FR7	09C024D37	4PDT "KH" 110/120V	CONTROLLER BX
CRRBF8	RELAY-RUN BELT 8 FORWARD	W6DM4FR8	09C024D37	4PDT "KH" 110/120V	CONTROLLER BX

COMPONENT PARTS LIST

COMPONENT NUMBER	FUNCTION OF THIS COMPONENT	WHERE TO FIND THIS COMPONENT	MILNOR P/N	DESCRIPTION	LOCATION
CRRBF9	RELAY-RUN BELT 9 FORWARD	W6DM4FR9	09C024D37	4PDT "KH" 110/120V	CONTROLLER BX
CRRBFA	RELAY-RUN BELT A FORWARD	W6DM4FRA	09C024D37	4PDT "KH" 110/120V	CONTROLLER BX
CRRBFB	RELAY-RUN BELT B FORWARD	W6DM4FRB	09C024D37	4PDT "KH" 110/120V	CONTROLLER BX
CRRBFC	RELAY-RUN BELT C FORWARD	W6DM4FRC	09C024D37	4PDT "KH" 110/120V	CONTROLLER BX
CRRBFD	RELAY-RUN BELT D FORWARD	W6DM4FRD	09C024D37	4PDT "KH" 110/120V	CONTROLLER BX
CRRBFE	RELAY-RUN BELT E FORWARD	W6DM4FRE	09C024D37	4PDT "KH" 110/120V	CONTROLLER BX
CRRBFF	RELAY-RUN BELT F FORWARD	W6DM4FRF	09C024D37	4PDT "KH" 110/120V	CONTROLLER BX
CRRBR0	RELAY-RUN BELT 0 REVERSE	W6DM4FR0	09C024D37	4PDT "KH" 110/120V	CONTROLLER BX
CRRBR1	RELAY-RUN BELT 1 REVERSE	W6DM4FR1	09C024D37	4PDT "KH" 110/120V	CONTROLLER BX
CRRBR2	RELAY-RUN BELT 2 REVERSE	W6DM4FR2	09C024D37	4PDT "KH" 110/120V	CONTROLLER BX
CRRBR3	RELAY-RUN BELT 3 REVERSE	W6DM4FR3	09C024D37	4PDT "KH" 110/120V	CONTROLLER BX
CRRBR4	RELAY-RUN BELT 4 REVERSE	W6DM4FR4	09C024D37	4PDT "KH" 110/120V	CONTROLLER BX
CRRBR5	RELAY-RUN BELT 5 REVERSE	W6DM4FR5	09C024D37	4PDT "KH" 110/120V	CONTROLLER BX
CRRBR6	RELAY-RUN BELT 6 REVERSE	W6DM4FR6	09C024D37	4PDT "KH" 110/120V	CONTROLLER BX
CRRBR7	RELAY-RUN BELT 7 REVERSE	W6DM4FR7	09C024D37	4PDT "KH" 110/120V	CONTROLLER BX
CRRBR8	RELAY-RUN BELT 8 REVERSE	W6DM4FR8	09C024D37	4PDT "KH" 110/120V	CONTROLLER BX
CRRBR9	RELAY-RUN BELT 9 REVERSE	W6DM4FR9	09C024D37	4PDT "KH" 110/120V	CONTROLLER BX
CRRBRA	RELAY-RUN BELT AREVERSE	W6DM4FRA	09C024D37	4PDT "KH" 110/120V	CONTROLLER BX
CRRBRB	RELAY-RUN BELT B REVERSE	W6DM4FRB	09C024D37	4PDT "KH" 110/120V	CONTROLLER BX
CRRBRC	RELAY-RUN BELT C REVERSE	W6DM4FRC	09C024D37	4PDT "KH" 110/120V	CONTROLLER BX
CRRBRD	RELAY-RUN BELT D REVERSE	W6DM4FRD	09C024D37	4PDT "KH" 110/120V	CONTROLLER BX
CRRBRE	RELAY-RUN BELT E REVERSE	W6DM4FRE	09C024D37	4PDT "KH" 110/120V	CONTROLLER BX
CRRBRF	RELAY-RUN BELT F REVERSE	W6DM4FRF	09C024D37	4PDT "KH" 110/120V	CONTROLLER BX
CRS+	RELAY-3-WIRE	W6DM4AD	09C01DDD37	RELAY-3PDT DIFGOLD 11PIN 120VAC	CONTROL BOX
CRS+	RELAY-3-WIRE	W6DM4FQ	09C024D37	4PDT "KH" 110/120V	LOADING BELT
CRS+	RELAY-3-WIRE	W6DM4S+	09C024D37	4PDT "KH" 110/120V	CONSOLE REAR
CRS+	RELAY-3-WIRE	WINSFR1A	09C024D37	4PDT "KH" 110/120V	BELT CONTROLR
CRSB5	RELAY-FEEDER BELT #5 BLOCKED	W6DM4FS5	09C024D37	4PDT "KH" 110/120V	FEEDER BELT
CRSB6	RELAY-FEEDER BELT #6 BLOCKED	W6DM4FS6	09C024D37	4PDT "KH" 110/120V	FEEDER BELT
CRSG	RELAY-SIGNAL	W6DM4S+	09C024D37	4PDT "KH" 110/120V	CONSOLE REAR
CRT	**>>ELECTRONIC MONITORS**				
CRT-1	MONITOR-MICROPROCESSOR	W6UT4MT	08MN20UXGA	22.1 LCD, ANALOG/DIGITAL BLACK	CONSOLE TOP
CRT-1	MONITOR-MICROPROCESSOR	W6UT4MTA	08MN23TVGA	23"LCD BMIDH TOUCHSCREEN	CONSOLE TOP

COMPONENT PARTS LIST

COMPONENT NUMBER	FUNCTION OF THIS COMPONENT	WHERE TO FIND THIS COMPONENT	MILNOR P/N	DESCRIPTION	LOCATION
CRUP	RELAY-BELT IN UNLOAD POSITION	W6DM4FQ	09C01DDD37	RELAY 3PDT DIFGOLD 11PIN 120VAC	LOADING BELT
CS	**>>CONTACTOR-MOTOR STARTER**				
CSBF	CONTACTOR-BELT FORWARD	W6DM4AD	09MR08B337	12A 3P REV+2N/C 120V5/6 IEC	CONTACT BOX
CSBR	CONTACTOR-BELT REVERSE	W6DM4AD	09MR08B337	12A 3P REV+2N/C 120V5/6 IEC	CONTACT BOX
CSRBF	CONTACTOR-RUN LOADING BELT	W6DM4FP	09MR08B337	12A 3P REV+2N/C 120V5/6 IEC	CONTACTOR BX
CSRBF	CONTACTOR-RUN FORWARD	W6DM4SB	09MR08B337	12A 3P REV+2N/C 120V5/6 IEC	CONTACTOR BX
CSRBF	CONTACTOR-RUN FORWARD	WINSFR1A	09MR08B337	12A 3P REV+2N/C 120V5/6 IEC	BELT CONTROLR
CSRBF0	CONTACTOR-RUN BELT 0 FORWARD	W6DM4FR0	09MR08B337	12A 3P REV+2N/C 120V5/6 IEC	CONTACTOR BX
CSRBF1	CONTACTOR-RUN BELT 1 FORWARD	W6DM4FR1	09MR08B337	12A 3P REV+2N/C 120V5/6 IEC	CONTACTOR BX
CSRBF2	CONTACTOR-RUN BELT 2 FORWARD	W6DM4FR2	09MR08B337	12A 3P REV+2N/C 120V5/6 IEC	CONTACTOR BX
CSRBF3	CONTACTOR-RUN BELT 3 FORWARD	W6DM4FR3	09MR08B337	12A 3P REV+2N/C 120V5/6 IEC	CONTACTOR BX
CSRBF4	CONTACTOR-RUN BELT 4 FORWARD	W6DM4FR4	09MR08B337	12A 3P REV+2N/C 120V5/6 IEC	CONTACTOR BX
CSRBF5	CONTACTOR-RUN BELT 5 FORWARD	W6DM4FR5	09MR08B337	12A 3P REV+2N/C 120V5/6 IEC	CONTACTOR BX
CSRBF6	CONTACTOR-RUN BELT 6 FORWARD	W6DM4FR6	09MR08B337	12A 3P REV+2N/C 120V5/6 IEC	CONTACTOR BX
CSRBF7	CONTACTOR-RUN BELT 7 FORWARD	W6DM4FR7	09MR08B337	12A 3P REV+2N/C 120V5/6 IEC	CONTACTOR BX
CSRBF8	CONTACTOR-RUN BELT 8 FORWARD	W6DM4FR8	09MR08B337	12A 3P REV+2N/C 120V5/6 IEC	CONTACTOR BX
CSRBF9	CONTACTOR-RUN BELT 9 FORWARD	W6DM4FR9	09MR08B337	12A 3P REV+2N/C 120V5/6 IEC	CONTACTOR BX
CSRBFA	CONTACTOR-RUN BELT A FORWARD	W6DM4FRA	09MR08B337	12A 3P REV+2N/C 120V5/6 IEC	CONTACTOR BX
CSRBFB	CONTACTOR-RUN BELT B FORWARD	W6DM4FRB	09MR08B337	12A 3P REV+2N/C 120V5/6 IEC	CONTACTOR BX
CSRBFC	CONTACTOR-RUN BELT C FORWARD	W6DM4FRC	09MR08B337	12A 3P REV+2N/C 120V5/6 IEC	CONTACTOR BX
CSRBFD	CONTACTOR-RUN BELT D FORWARD	W6DM4FRD	09MR08B337	12A 3P REV+2N/C 120V5/6 IEC	CONTACTOR BX
CSRBFE	CONTACTOR-RUN BELT E FORWARD	W6DM4FRE	09MR08B337	12A 3P REV+2N/C 120V5/6 IEC	CONTACTOR BX
CSRBFF	CONTACTOR-RUN BELT F FORWARD	W6DM4FRF	09MR08B337	12A 3P REV+2N/C 120V5/6 IEC	CONTACTOR BX
CSRBR	CONTACTOR-RUN LOADING BELT	W6DM4FP	09MR08B337	12A 3P REV+2N/C 120V5/6 IEC	CONTACTOR BX
CSRBR	CONTACTOR-RUN REVERSE	W6DM4SB	09MR08B337	12A 3P REV+2N/C 120V5/6 IEC	CONTACTOR BX
CSRBR	CONTACTOR-RUN REVERSE	WINSFR1A	09MR08B337	12A 3P REV+2N/C 120V5/6 IEC	BELT CONTROLR
CSRBR0	CONTACTOR-RUN BELT 0 REVERSE	W6DM4FR0	09MR08B337	12A 3P REV+2N/C 120V5/6 IEC	CONTACTOR BX
CSRBR1	CONTACTOR-RUN BELT 1 REVERSE	W6DM4FR1	09MR08B337	12A 3P REV+2N/C 120V5/6 IEC	CONTACTOR BX
CSRBR2	CONTACTOR-RUN BELT 2 REVERSE	W6DM4FR2	09MR08B337	12A 3P REV+2N/C 120V5/6 IEC	CONTACTOR BX
CSRBR3	CONTACTOR-RUN BELT 3 REVERSE	W6DM4FR3	09MR08B337	12A 3P REV+2N/C 120V5/6 IEC	CONTACTOR BX
CSRBR4	CONTACTOR-RUN BELT 4 REVERSE	W6DM4FR4	09MR08B337	12A 3P REV+2N/C 120V5/6 IEC	CONTACTOR BX
CSRBR5	CONTACTOR-RUN BELT 5 REVERSE	W6DM4FR5	09MR08B337	12A 3P REV+2N/C 120V5/6 IEC	CONTACTOR BX
CSRBR6	CONTACTOR-RUN BELT 6 REVERSE	W6DM4FR6	09MR08B337	12A 3P REV+2N/C 120V5/6 IEC	CONTACTOR BX

COMPONENT PARTS LIST

COMPONENT NUMBER	FUNCTION OF THIS COMPONENT	WHERE TO FIND THIS COMPONENT	MILNOR P/N	DESCRIPTION	LOCATION
CSRBR7	CONTACTOR-RUN BELT 7 REVERSE	W6DM4FR7	09MR08B337	12A 3P REV+2N/C 120V5/6 IEC	CONTACTOR BX
CSRBR8	CONTACTOR-RUN BELT 8 REVERSE	W6DM4FR8	09MR08B337	12A 3P REV+2N/C 120V5/6 IEC	CONTACTOR BX
CSRBR9	CONTACTOR-RUN BELT 9 REVERSE	W6DM4FR9	09MR08B337	12A 3P REV+2N/C 120V5/6 IEC	CONTACTOR BX
CSRBRA	CONTACTOR-RUN BELT A REVERSE	W6DM4FRA	09MR08B337	12A 3P REV+2N/C 120V5/6 IEC	CONTACTOR BX
CSRBRB	CONTACTOR-RUN BELT B REVERSE	W6DM4FRB	09MR08B337	12A 3P REV+2N/C 120V5/6 IEC	CONTACTOR BX
CSRBRC	CONTACTOR-RUN BELT C REVERSE	W6DM4FRC	09MR08B337	12A 3P REV+2N/C 120V5/6 IEC	CONTACTOR BX
CSRBRD	CONTACTOR-RUN BELT D REVERSE	W6DM4FRD	09MR08B337	12A 3P REV+2N/C 120V5/6 IEC	CONTACTOR BX
CSRBRE	CONTACTOR-RUN BELT E REVERSE	W6DM4FRE	09MR08B337	12A 3P REV+2N/C 120V5/6 IEC	CONTACTOR BX
CSRBRF	CONTACTOR-RUN BELT F REVERSE	W6DM4FRF	09MR08B337	12A 3P REV+2N/C 120V5/6 IEC	CONTACTOR BX
CSVS	INVERTER	W6DM4FR0	09MR08B337	12A 3P REV+2N/C 120V5/6 IEC	CONTACTOR BX
CSVS	INVERTER	W6DM4FR1	09MR08B337	12A 3P REV+2N/C 120V5/6 IEC	CONTACTOR BX
CSVS	INVERTER	W6DM4FR2	09MR08B337	12A 3P REV+2N/C 120V5/6 IEC	CONTACTOR BX
CSVS	INVERTER	W6DM4FR3	09MR08B337	12A 3P REV+2N/C 120V5/6 IEC	CONTACTOR BX
CSVS	INVERTER	W6DM4FR4	09MR08B337	12A 3P REV+2N/C 120V5/6 IEC	CONTACTOR BX
CSVS	INVERTER	W6DM4FR5	09MR08B337	12A 3P REV+2N/C 120V5/6 IEC	CONTACTOR BX
CSVS	INVERTER	W6DM4FR6	09MR08B337	12A 3P REV+2N/C 120V5/6 IEC	CONTACTOR BX
CSVS	INVERTER	W6DM4FR7	09MR08B337	12A 3P REV+2N/C 120V5/6 IEC	CONTACTOR BX
CSVS	INVERTER	W6DM4FR8	09MR08B337	12A 3P REV+2N/C 120V5/6 IEC	CONTACTOR BX
CSVS	INVERTER	W6DM4FR9	09MR08B337	12A 3P REV+2N/C 120V5/6 IEC	CONTACTOR BX
CSVS	INVERTER	W6DM4FRA	09MR08B337	12A 3P REV+2N/C 120V5/6 IEC	CONTACTOR BX
CSVS	INVERTER	W6DM4FRB	09MR08B337	12A 3P REV+2N/C 120V5/6 IEC	CONTACTOR BX
CSVS	INVERTER	W6DM4FRC	09MR08B337	12A 3P REV+2N/C 120V5/6 IEC	CONTACTOR BX
CSVS	INVERTER	W6DM4FRD	09MR08B337	12A 3P REV+2N/C 120V5/6 IEC	CONTACTOR BX
CSVS	INVERTER	W6DM4FRE	09MR08B337	12A 3P REV+2N/C 120V5/6 IEC	CONTACTOR BX
CSVS	INVERTER	W6DM4FRF	09MR08B337	12A 3P REV+2N/C 120V5/6 IEC	CONTACTOR BX
EB	**>>BUZZER OR AUDIBLE SIGNAL**				
EBC	BUZZER	WINSFR1B	09H020	ALARM SONALERT 115V	BELT CONTROLR
EBSG	BUZZER-SIGNAL	W6DM4AD	09H015	BUZZER 115V W/6-32 CRT+6" LEADS	CONTROL BOX
EBSG	BUZZER-SIGNAL AUDIBLE	W6DM4FQ	09H015	BUZZER 115V W/6-32 CRT+6" LEADS	LOADING BELT
EBSG	BUZZER-SIGNAL AUDIBLE	W6DM4S+	09H015	BUZZER 115V W/6-32 CRT+6" LEADS	CONSOLE SWPNL
EC	**>>>COOLING FAN**				
ECF	FAN-P.C. COOLING	W6UT4MT	13AF100A37	FAN 92CFM115V60	CONSOLE TOP
ECF	FAN-P.C. COOLING	W6UT4MTA	13AF100A37	FAN 92CFM115V60	CONSOLE TOP

COMPONENT PARTS LIST

COMPONENT NUMBER	FUNCTION OF THIS COMPONENT	WHERE TO FIND THIS COMPONENT	MILNOR P/N	DESCRIPTION	LOCATION
EF	**>>FUSE OR FUSE HOLDER**				
EF37	FUSE-120V CONTROL CIRCUIT	W6DM4FR0	09FF004AHG	FUSE BK/MDX 4 AMP 125V BUSS	BELT CONTROLR
EF37	FUSE-120V MULTI TRAC CONSOLE	W6UT4MT	09FF002AMG	FUSE BK/MDX 2 AMP 250V BUSS	CONSOLE REAR
EF37	FUSE-120V MULTI TRAC CONSOLE	W6UT4MTA	09FF002AMG	FUSE BK/MDX 2 AMP 250V BUSS	CONSOLE REAR
EFC	**>>FLASHER**				
EFC	FLASHING LIGHT-MOVING	WINSFR1B	09H026V37	BEACON ROTARY 90MM AMBER CE ALLEN	BELT CONTROLR
EFCF	FLASHER	WINSFR1B	08FL007537	FLASHER 120V 1AMP 75FL/MIN	BELT CONTROLR
EL	**>>LIGHT-PILOT OR INDICATOR**				
EL0	LIGHT-120V AVAILIBLE	W6DM4FR0	09J060G37	LAMP 1/2" GRN 125V IDI 1052QC5	BELT CONTROLR
ELD	LIGHT-BELT DESIRES LOAD	W6DM4RR	09J070REC	LITE-STOP 4" RED LENS	BELT LIGHT BX
ELESR	LIGHT - ILLUMINATED EMERGENCY STOP	W6DM5FRVA	09N507E	ESTOP SWITCH HEAD RED CLEAR NEEDS	CONTROL BOX
ELFRN*	LED-BEACON CONVEYOR	W6DM5FRVA	09H025V12	BEACON ROTARY AMBER LED 12VDC	CONTROL BOX
ELLL	LIGHT-BELT LOADED	W6DM4RR	09J070REC	LITE-STOP 4" RED LENS	BELT LIGHT BX
ELP	LIGHT-BELT IN LOAD POSITION	W6DM4RR	09J070REC	LITE-STOP 4" RED LENS	BELT LIGHT BX
ELS+	LIGHT-3-WIRE	W6DM4AD	09J060G37	LAMP 1/2" GRN 125V IDI 1050QC3	CONTROL BOX
ELS+	LIGHT-3-WIRE	W6DM4FQ	09J060G37	LAMP 1/2" GRN 125V IDI 1052QC5	LOADING BELT
ELS+	LIGHT-3-WIRE	WINSFR1A	09J060G37	LAMP 1/2" GRN 125V IDI 1052QC5	BELT CONTROLR
ELSF	LIGHT-ROTATING BEACON OUTPUT	W6UT4MT	08BNOTPT	BOARD 1OUT+TICKET PRINT TEST	CONSOLE FRNT
ELSF	LIGHT-ROTATING BEACON	W6UT4MT	09H025V37	BEACON ROTARY 5.5"DIA AMBER	CONSOLE TOP
ELSF	LIGHT-ROTATING BEACON OUTPUT	W6UT4MTA	08BNOTPT	BOARD 1OUT+TICKET PRINT TEST	CONSOLE FRNT
ELSF	LIGHT-ROTATING BEACON	W6UT4MTA	09H025V37	BEACON ROTARY 5.5"DIA AMBER	CONSOLE TOP
ELSG	LIGHT-SIGNAL	W6DM4S+	09J060WH37	LAMP 1/2" WHITE 120V TAB	CONSOLE SWPNL
ELUP	LIGHT-BELT IN UNLOAD POSITION	W6DM4RR	09J070REC	LITE-STOP 4" RED LENS	BELT LIGHT BX
EMES	SWITCH-EMERGENCY STOP	W6DM5FRVA	09N507F	ESTOP CONTACT BLOCK WITH 120VAC LIG	CONTROL BOX
ES	**>>POWER SUPPLY-ELECTRONIC**				
ESPC	POWER SUPPLY SOLID STATE COMPUTER	W6UT4MTA	MESSAGE EW	SEE ITEM BPC	CONSOLE TOP
ESPL*	POWER SUPPLY - FLASHING LIGHT	W6DM5FRVA	08PSS3401T	40 WATT POWER SUPPLY TESTED	CONTROL BOX
ESPS	POWER SUPPLY-MICROPROCESSOR	W6UT4MT	08PSS3401T	40 WATT POWER SUPPLY TESTED	CONSOLE FRNT
ESPS	POWER SUPPLY-MICROPROCESSOR	W6UT4MTA	08PSS3401T	40 WATT POWER SUPPLY TESTED	CONSOLE FRNT
ESPS3	POWER SUPPLY-PHOTOEYE	W6DM4BWB	08PSL1B224	PWR SUP 100-240VAC TO 24VDC	CONSOLE REAR
ET	**>>>THERMAL OVERLOADS**				
ETB	OVERLOAD-BELT MOTOR	W6DM4MR	09FTC0010T	OL RELAY 1.0-2.9A AB#193-A3D1	SIDE OF BELT
EX	**>>TRANSFORMERS**				

COMPONENT PARTS LIST

COMPONENT NUMBER	FUNCTION OF THIS COMPONENT	WHERE TO FIND THIS COMPONENT	MILNOR P/N	DESCRIPTION	LOCATION
EX33	TRANSFORMER-220/1/50 TO 110V	W6UT4MT	09US010A96	XFMR 1PH1.5KVA240/480X120/240	CONSOLE REAR
EX33	TRANSFORMER-220/1/50 TO 110V	W6UT4MTA	09US010A96	XFMR 1PH1.5KVA240/480X120/240	CONSOLE REAR
EX96A	TRANSFORMER-600V TO 480V	W6DM4MR6	09UA050AAB	XFMR MULTIVOLT 500VA(5PRI LDS)	AT CONTROL BX
EX96B	TRANSFORMER-600V TO 480V	W6DM4MR6	09UA050AAB	XFMR MULTIVOLT 500VA(5PRI LDS)	AT CONTROL BX
EXL	TRANSFORMER-LOADING LIGHTS	W6DM4RR	09U002EBR	XFMR 120/240 PRI EBR 12VDC	BELT CONTROLR
EXSA	ARRESTOR-SECONDARY SPARK	W6DM4MR6	09X001A	SECONDARY ARRESTER 650V3P DELTA O	AT CONTROL BX
EXSA	ARRESTOR-SECONDARY SPARK	W6DM4MR6	09X001B	SECONDARY ARRESTER 650V3P WYE ONL	AT CONTROL BX
KB	**>>KEYBOARD-ELECTRONIC**				
KB1	KEYBOARD-P.C.	W6UT4MT	08PCME005K	KEYBOARD PS2 104KEY WIN95	CONSOLE DWR
KB1	KEYBOARD-P.C.	W6UT4MTA	08PCME005K	KEYBOARD PS2 104KEY WIN95	CONSOLE DWR
KBM1	MOUSE-P.C.	W6UT4MT	08PCME001M	MOUSE PS2 2BUTTON MICROSOFT	CONSOLE DWR
KBM1	MOUSE-P.C.	W6UT4MTA	08PCME001M	MOUSE PS2 2BUTTON MICROSOFT	CONSOLE DWR
MR	**>>MOTORS**				
MTB	MOTOR	W6DM4MR	MESSAGE SO	SEE SPECIFIC COMPONENT+NAMEPLATE	SIDE OF BELT
MTVS	INVERTER-COOLING FAN	W6DM5FR0	13AF300A37	FAN 300 CFM 115V 50/60	BELT CONTROLR
MTVS	INVERTER-COOLING FAN	W6DM5FR1	13AF300A37	FAN 300 CFM 115V 50/61	BELT CONTROLR
MTVS	INVERTER-COOLING FAN	W6DM5FR2	13AF300A37	FAN 300 CFM 115V 50/62	BELT CONTROLR
MTVS	INVERTER-COOLING FAN	W6DM5FR3	13AF300A37	FAN 300 CFM 115V 50/63	BELT CONTROLR
MTVS	INVERTER-COOLING FAN	W6DM5FR4	13AF300A37	FAN 300 CFM 115V 50/64	BELT CONTROLR
MTVS	INVERTER-COOLING FAN	W6DM5FR5	13AF300A37	FAN 300 CFM 115V 50/65	BELT CONTROLR
MTVS	INVERTER-COOLING FAN	W6DM5FR6	13AF300A37	FAN 300 CFM 115V 50/66	BELT CONTROLR
MTVS	INVERTER-COOLING FAN	W6DM5FR7	13AF300A37	FAN 300 CFM 115V 50/67	BELT CONTROLR
MTVS	INVERTER-COOLING FAN	W6DM5FR8	13AF300A37	FAN 300 CFM 115V 50/68	BELT CONTROLR
MTVS	INVERTER-COOLING FAN	W6DM5FR9	13AF300A37	FAN 300 CFM 115V 50/69	BELT CONTROLR
MTVS	INVERTER-COOLING FAN	W6DM5FRA	13AF300A37	FAN 300 CFM 115V 50/70	BELT CONTROLR
MTVS	INVERTER-COOLING FAN	W6DM5FRB	13AF300A37	FAN 300 CFM 115V 50/71	BELT CONTROLR
MTVS	INVERTER-COOLING FAN	W6DM5FRC	13AF300A37	FAN 300 CFM 115V 50/72	BELT CONTROLR
MTVS	INVERTER-COOLING FAN	W6DM5FRD	13AF300A37	FAN 300 CFM 115V 50/73	BELT CONTROLR
MTVS	INVERTER-COOLING FAN	W6DM5FRE	13AF300A37	FAN 300 CFM 115V 50/74	BELT CONTROLR
MTVS	INVERTER-COOLING FAN	W6DM5FRF	13AF300A37	FAN 300 CFM 115V 50/75	BELT CONTROLR
SH	**>>SWITCH-HAND OPERATED**				
SHAD	SWITCH-BELT ALLOWED TO DISCHARGE	W6DM4FP	09N405M210	SWASS M2W 1NO	LOADING BELT
SHAD	SWITCH-BELT 0 ALLOWED TO DISCHARGE	W6DM4FR0	09N405M210	SWASS M2W 1NO	BELT CONTROLR

COMPONENT PARTS LIST

COMPONENT NUMBER	FUNCTION OF THIS COMPONENT	WHERE TO FIND THIS COMPONENT	MILNOR P/N	DESCRIPTION	LOCATION
SHAD	SWITCH-BELT 1 ALLOWED TO DISCHARGE	W6DM4FR1	09N405M210	SWASS M2W 1NO	BELT CONTROLR
SHAD	SWITCH-BELT 2 ALLOWED TO DISCHARGE	W6DM4FR2	09N405M210	SWASS M2W 1NO	BELT CONTROLR
SHAD	SWITCH-BELT 3 ALLOWED TO DISCHARGE	W6DM4FR3	09N405M210	SWASS M2W 1NO	BELT CONTROLR
SHAD	SWITCH-BELT 4 ALLOWED TO DISCHARGE	W6DM4FR4	09N405M210	SWASS M2W 1NO	BELT CONTROLR
SHAD	SWITCH-BELT 5 ALLOWED TO DISCHARGE	W6DM4FR5	09N405M210	SWASS M2W 1NO	BELT CONTROLR
SHAD	SWITCH-BELT 6 ALLOWED TO DISCHARGE	W6DM4FR6	09N405M210	SWASS M2W 1NO	BELT CONTROLR
SHAD	SWITCH-BELT 7 ALLOWED TO DISCHARGE	W6DM4FR7	09N405M210	SWASS M2W 1NO	BELT CONTROLR
SHAD	SWITCH-BELT 8 ALLOWED TO DISCHARGE	W6DM4FR8	09N405M210	SWASS M2W 1NO	BELT CONTROLR
SHAD	SWITCH-BELT 9 ALLOWED TO DISCHARGE	W6DM4FR9	09N405M210	SWASS M2W 1NO	BELT CONTROLR
SHAD	SWITCH-BELT A ALLOWED TO DISCHARGE	W6DM4FRA	09N405M210	SWASS M2W 1NO	BELT CONTROLR
SHAD	SWITCH-BELT B ALLOWED TO DISCHARGE	W6DM4FRB	09N405M210	SWASS M2W 1NO	BELT CONTROLR
SHAD	SWITCH-BELT C ALLOWED TO DISCHARGE	W6DM4FRC	09N405M210	SWASS M2W 1NO	BELT CONTROLR
SHAD	SWITCH-BELT D ALLOWED TO DISCHARGE	W6DM4FRD	09N405M210	SWASS M2W 1NO	BELT CONTROLR
SHAD	SWITCH-BELT E ALLOWED TO LOAD	W6DM4FRE	09N405M210	SWASS M2W 1NO	BELT CONTROLR
SHAD	SWITCH-BELT F ALLOWED TO DISCHARGE	W6DM4FRF	09N405M210	SWASS M2W 1NO	BELT CONTROLR
SHAD	SWITCH-DISCHARGE ALLOWED	W6DM4I	09N405M210	SWASS M2W 1NO	ON DRYER
SHAL	SWITCH-LOAD ALLOWED	W6DM4I	09N405M210	SWASS M2W 1NO	ON DRYER
SHAM	SWITCH-AUTOMATIC/MANUAL	W6DM4AD	09N400CBNO	CONTACT BLK ONLY 1-NO SQD#ZB2BE101	CONTROL BOX
SHAM	SWITCH-AUTO/MANUAL	W6DM4FQ	09N405M210	SWASS M2W 1NO	LOADING BELT
SHBAL	SWITCH-FEEDER BELT #5 LD ALLOWED	W6DM4FS5	09N405PB10	SWASS PBBK 1NO	BELT CONTROLR
SHBAL	SWITCH-FEEDER BELT #6 LD ALLOWED	W6DM4FS6	09N405PB10	SWASS PBBK 1NO	BELT CONTROLR
SHD	SWITCH-DATA VALID-BELT LOADED	W6DM4FQ	09N405PB10	SWASS PBBK 1NO	LOADING BELT
SHDT	SWITCH-BELT 0 ALLOWED TO LOAD	W6DM4FR0	09N405M210	SWASS M2W 1NO	BELT CONTROLR
SHDT	SWITCH-BELT 1 ALLOWED TO LOAD	W6DM4FR1	09N405M210	SWASS M2W 1NO	BELT CONTROLR
SHDT	SWITCH-BELT 2 ALLOWED TO LOAD	W6DM4FR2	09N405M210	SWASS M2W 1NO	BELT CONTROLR
SHDT	SWITCH-BELT 3 ALLOWED TO LOAD	W6DM4FR3	09N405M210	SWASS M2W 1NO	BELT CONTROLR
SHDT	SWITCH-BELT 4 ALLOWED TO LOAD	W6DM4FR4	09N405M210	SWASS M2W 1NO	BELT CONTROLR
SHDT	SWITCH-BELT 5 ALLOWED TO LOAD	W6DM4FR5	09N405M210	SWASS M2W 1NO	BELT CONTROLR
SHDT	SWITCH-BELT 6 ALLOWED TO LOAD	W6DM4FR6	09N405M210	SWASS M2W 1NO	BELT CONTROLR
SHDT	SWITCH-BELT 7 ALLOWED TO LOAD	W6DM4FR7	09N405M210	SWASS M2W 1NO	BELT CONTROLR
SHDT	SWITCH-BELT 8 ALLOWED TO LOAD	W6DM4FR8	09N405M210	SWASS M2W 1NO	BELT CONTROLR
SHDT	SWITCH-BELT 9 ALLOWED TO LOAD	W6DM4FR9	09N405M210	SWASS M2W 1NO	BELT CONTROLR
SHDT	SWITCH-BELT A ALLOWED TO LOAD	W6DM4FRA	09N405M210	SWASS M2W 1NO	BELT CONTROLR

COMPONENT PARTS LIST

COMPONENT NUMBER	FUNCTION OF THIS COMPONENT	WHERE TO FIND THIS COMPONENT	MILNOR P/N	DESCRIPTION	LOCATION
SHDT	SWITCH-BELT B ALLOWED TO LOAD	W6DM4FRB	09N405M210	SWASS M2W 1NO	BELT CONTROLR
SHDT	SWITCH-BELT C ALLOWED TO LOAD	W6DM4FRC	09N405M210	SWASS M2W 1NO	BELT CONTROLR
SHDT	SWITCH-BELT D ALLOWED TO LOAD	W6DM4FRD	09N405M210	SWASS M2W 1NO	BELT CONTROLR
SHDT	SWITCH-BELT E ALLOWED TO LOAD	W6DM4FRE	09N405M210	SWASS M2W 1NO	BELT CONTROLR
SHDT	SWITCH-BELT F ALLOWED TO LOAD	W6DM4FRF	09N405M210	SWASS M2W 1NO	BELT CONTROLR
SHFA	SWITCH-REMOTE FORMULA SELECT ALPHA	W6DM4SD	09N041N	ROTSW 5-POLE 8-POSIT 5A125V	RM SELECT BX
SHFA	SWITCH-REMOTE FORMULA SELECT ALPHA	W6DM4SF	09N041N	ROTSW 5-POLE 8-POSIT 5A125V	FORMULA SELCT
SHFN	SWITCH-REMOTE FORMULA SELECT NUMB	W6DM4SD	09N041N	ROTSW 5-POLE 8-POSIT 5A125V	RM SELECT BX
SHFN	SWITCH-REMOTE FORMULA SELECT NUMB	W6DM4SF	09N041N	ROTSW 5-POLE 8-POSIT 5A125V	FORMULA SELCT
SHFR	SWITCH-FORWARD/REVERSE	W6DM4AD	09N400CBNO	CONTACT BLK ONLY 1-NO SQD#ZB2BE101	CONTROL BOX
SHFR	SWITCH-FORWARD/REVERSE	WINSFR1A	09N405S320	SWASS S3W 2NO	BELT CONTROLR
SHFS	SWITCH-REMOTE FORMULA SELECT 0-15	W6DM4SD	09N041N	ROTSW 5-POLE 8-POSIT 5A125V	RM SELECT BX
SHJOG	SWITCH-FEEDER BELT #5 JOG	W6DM4FS5	09N405PB10	SWASS PBBK 1NO	FEEDER BLT CNT
SHJOG	SWITCH-FEEDER BELT #6 JOG	W6DM4FS6	09N405PB10	SWASS PBBK 1NO	FEEDER BLT CNT
SHL	SWITCH-BELT IS LOADED	W6DM4FQ	09N405M210	SWASS M2W 1NO	LOADING BELT
SHL	SWITCH-BELT IS LOADED	W6DM4I	09N405M210	SWASS M2W 1NO	ON DRYER
SHLR	SWITCH-BELT IS LOADED RESET	W6DM4FQ	09N405PB01	SWASS BP BLUE INC	LOADING BELT
SHM	SWITCH-FEEDER BELT #6 MANUAL	W6DM4FS6	09N405M210	SWASS M2W 1NO	FEEDER BLT CNT
SHM	SWITCH-FEEDER BELT #5 MANUAL	W6DM4FS5	09N405M210	SWASS M2W 1NO	FEEDER BLT CNT
SHMA	SWITCH-MASTER	W6DM4FQ	09N405M210	SWASS M2W 1NO	LOADING BELT
SHMD	SWITCH-BELT MOTOR DISCONNECT	W6DM4MR	09N042204	ROTARY DISCON 10A 600V 2POS 4P	SIDE OF BELT
SHMD	SWITCH-MOTOR DISCONNECT	W6DM4S+	09N042204	ROTARY DISCON 10A 600V 2POS 4P	SIDE OF BELTS
SHMD	SWITCH-MOTOR DISCONNECT	WINSFR1A	09N042204	ROTARY DISCON 10A 600V 2POS 4P	SIDE OF BELTS
SHPE1	SWITCH-EMERGENCY PULL CORD	W6DM4FQ	09RS0002	PULL-WIRE SW SCHMERSAL#ZQ 700-11	SIDE OF BELTS
SHPE1	SWITCH-EMERGENCY PULL CORD	W6DM4S+	09RS0002	PULL-WIRE SW SCHMERSAL#ZQ 700-12	SIDE OF BELTS
SHPE1	SWITCH-EMERGENCY PULL CORD	W6DM5FRVA	09RS0002	PULL-WIRE SW SCHMERSAL#ZQ 700-13	SIDE OF BELTS
SHPE1	SWITCH-EMERGENCY PULL CORD	WINSFR1A	09RS0002	PULL-WIRE SW SCHMERSAL#ZQ 700-14	SIDE OF BELTS
SHPE2	SWITCH-EMERGENCY PULL CORD	W6DM4FQ	09RS0002	PULL-WIRE SW SCHMERSAL#ZQ 700-15	SIDE OF BELTS
SHPE2	SWITCH-EMERGENCY PULL CORD	W6DM4S+	09RS0002	PULL-WIRE SW SCHMERSAL#ZQ 700-16	SIDE OF BELTS
SHPE2	SWITCH-EMERGENCY PULL CORD	WINSFR1A	09RS0002	PULL-WIRE SW SCHMERSAL#ZQ 700-17	SIDE OF BELTS
SHS+	SWITCH-START	W6DM4AD	09N400CBNO	CONTACT BLK ONLY 1-NO SQD#ZB2BE101	CONTROL BOX
SHS+	SWITCH-START	W6DM4FQ	09N405PG10	SWASS PBGN 1NO	LOADING BELT
SHS+	SWITCH-START	W6DM4S+	09N405PG10	SWASS PBGN 1NO	CONSOLE SWPNL

COMPONENT PARTS LIST

COMPONENT NUMBER	FUNCTION OF THIS COMPONENT	WHERE TO FIND THIS COMPONENT	MILNOR P/N	DESCRIPTION	LOCATION
SHS+	SWITCH-START DRYNET DEVICE	W6UT4MD	09N405PG10	SWASS PBGN 1NO	SIDE CONSOLE
SHS+	SWITCH-START	WINSFR1A	09N405PG10	SWASS PBGN 1NO	BELT CONTROLR
SHSFR	SWITCH-RANGE SELECT	W6DM4SD	09N405M210	SWASS M2W 1NO	RM SELECT BX
SHSG	SWITCH-SIGNAL CANCEL	W6DM4S+	09N405PY10	SWASS PB YELLOW 1NO	CONSOLE SWPNL
SHSM	SWITCH-MANUAL OPERATION	WINSFR1A	09N405M220	SWASS M2W 2NO	BELT CONTROLR
SHSMA	SWITCH-MASTER	W6DM4AD	09N400CBNO	CONTACT BLK ONLY 1-NO SQD#ZB2BE101	CONTROL BOX
SHSMA	SWITCH-MASTER	W6DM4BWB	09N405M210	SWASS M2W 1NO	CONSOLE SWPNL
SHSMA	SWITCH-MASTER	W6DM4S+	09N405M210	SWASS M2W 1NO	CONSOLE SWPNL
SHSMA	SWITCH-MASTER DRYNET DEVICE	W6UT4MD	09N405M210	SWASS M2W 1NO	SIDE CONSOLE
SHSO	SWITCH-STOP	W6DM4AD	09N400CBNC	CONTACT BLK ONLY 1-NC SQD#ZB2BE102	CONTROL BOX
SHSO	SWITCH-STOP	W6DM4FQ	09N405PR01	SWASS PBRD 1NC	LOADING BELT
SHSO	SWITCH-STOP	W6DM4S+	09N405PR01	SWASS PBRD 1NC	CONSOLE SWPNL
SHSO	SWITCH-STOP DRYNET DEVICE	W6UT4MD	09N405PR01	SWASS PBRD 1NC	SIDE CONSOLE
SHSO	SWITCH-STOP	WINSFR1A	09N405PR01	SWASS PBRD 1NC	BELT CONTROLR
SHTL	SWITCH-TEST LAMP	W6UT4MTA	09N405PB11	SWASS PBBK 1NO/1NC	BELT CONTROLR
SHTL	SWITCH-TEST LAMP	W6DM5FR0	09N405PB11	SWASS PBBK 1NO/1NC	
SK	**>>SWITCH-KEYLOCK**				
SM	**>>SWITCH-MECHANICAL OPERATED**				
SMD	SWITCH-DISCHARGE POSITION	WINSFR1B	09RPS30CAS	PROXSW QK CONN 30M NO-AC SHLD MIC	SIDE OF BELT
SMH	SWITCH-HOME POSITION	WINSFR1B	09RPS30CAS	PROXSW QK CONN 30M NO-AC SHLD MIC	SIDE OF BELT
SMFB1	SWITCH-JOG LOADING BELT	W6DM4FP	09R014A	MINI-SW SPDT STAKON #V15G1C26	LOADING BELT
SMFB2	SWITCH-JOG LOADING BELT	W6DM4FP	09R014A	MINI-SW SPDT STAKON #V15G1C26	LOADING BELT
SMLP	SWITCH-BELT IN LOAD POSITION	W6DM4FQ	09R012	MICSW SPDT PAINTED BZE6-RN 01	LOADING BELT
SMUP	SWITCH-BELT IN UNLOAD POSITION	W6DM4FQ	09R012	MICSW SPDT PAINTED BZE6-RN 01	LOADING BELT
ST	**>>SWITCH-TEMPERATURE OPERATED**				
STDB	SWITCH-THERMOSTAT DYNAMIC BRAKE	W6DM5FRS	30RA175T	THERMOSTAT OPENS AT 175F	CONTROL BOX
UPS	**>>>BACKUP POWER SUPPLY**				
UPS1	UNINTERRUPED POWER SUPPLY	W6UT4MT	08PCUPS350	BACKUP-UPS CS 350	CONSOLE REAR
UPS1	UNINTERRUPED POWER SUPPLY	W6UT4MTA	MESSAGE EW	SEE ITEM BPC	CONSOLE TOP
VE	**>>VALVE-ELECTRIC OPERATED**				
VECB1	VALVE-EXTEND N/C	W6DM5CB1	96R301A37	1/8" PILOT 3W-NC 110/50 120/60	VALVE SET
VECB2	VALVE-RETRACT N/C	W6DM5CB1	96R301A37	1/8" PILOT 3W-NC 110/50 120/60	VALVE SET
VECD	VALVE-MOVE COHORP TO DISCHARGE	WINSFR1B	96R301A37	1/8" PILOT 3W-NC 110/50 120/60	BELT CONTROLR

COMPONENT PARTS LIST

COMPONENT NUMBER	FUNCTION OF THIS COMPONENT	WHERE TO FIND THIS COMPONENT	MILNOR P/N	DESCRIPTION	LOCATION
VECH	VALVE-MOVE COHORP TO HOME	WINSFR1B	96R301A37	1/8" PILOT 3W-NC 110/50 120/60	BELT CONTROLR
VEET	VALVE-EXTEND RAIL TARGET	W6DM4FQ	96R301A37	1/8" PILOT 3W-NC 110/50 120/60	LOADING BELT
VEET	VALVE-EXTEND TARGET	W6DM4SB	96R301A37	1/8" PILOT 3W-NC 110/50 120/60	DEVICE AIR BX
ZF	**>>RECTIFIERS**				
ZFDL	RECTIFIER-BELT DESIRES LOAD	W6DM4RR	09A020EBR	RECTIFIER (ERB) 15A/600PIV	BELT LIGHT BX
ZFL	RECTIFIER-BELT LOADED	W6DM4RR	09A020EBR	RECTIFIER (ERB) 15A/600PIV	BELT LIGHT BX
ZFP	RECTIFIER-BELT IN LOAD POSITION	W6DM4RR	09A020EBR	RECTIFIER (ERB) 15A/600PIV	BELT LIGHT BX
ZFUP	RECTIFIER-BELT IN UNLOAD POSITION	W6DM4RR	09A020EBR	RECTIFIER (ERB) 15A/600PIV	BELT LIGHT BX

PELLERIN MILNOR CORPORATION
LIMITED STANDARD WARRANTY

We warrant to the original purchaser that MILNOR machines including electronic hardware/software (hereafter referred to as "equipment"), will be free from defects in material and workmanship for a period of one year from the date of shipment (unless the time period is specifically extended for certain parts pursuant to a specific MILNOR published extended warranty) from our factory with no operating hour limitation. This warranty is contingent upon the equipment being installed, operated and serviced as specified in the operating manual supplied with the equipment, and operated under normal conditions by competent operators.

Providing we receive written notification of a warranted defect within 30 days of its discovery, we will—at our option—repair or replace the defective part or parts, EX Factory (labor and freight specifically NOT included). We retain the right to require inspection of the parts claimed defective in our factory prior to repairing or replacing same. We will not be responsible, or in any way liable, for unauthorized repairs or service to our equipment, and this warranty shall be void if the equipment is tampered with, modified, or abused, used for purposes not intended in the design and construction of the machine, or is repaired or altered in any way without MILNOR's written consent.

Parts damaged by exposure to weather, to aggressive water, or to chemical attack are not covered by this warranty. For parts which require routine replacement due to normal wear—such as gaskets, contact points, brake and clutch linings, belts, hoses, and similar parts—the warranty time period is 90 days.

We reserve the right to make changes in the design and/or construction of our equipment (including purchased components) without obligation to change any equipment previously supplied.

ANY SALE OR FURNISHING OF ANY EQUIPMENT BY MILNOR IS MADE ONLY UPON THE EXPRESS UNDERSTANDING THAT MILNOR MAKES NO EXPRESSED OR IMPLIED WARRANTIES OF MERCHANTABILITY OR FITNESS FOR ANY PARTICULAR USE OR PURPOSE OR ANY OTHER WARRANTY IMPLIED BY LAW INCLUDING BUT NOT LIMITED TO REDHIBITION. MILNOR WILL NOT BE RESPONSIBLE FOR ANY COSTS OR DAMAGES ACTUALLY INCURRED OR REQUIRED AS A RESULT OF: THE FAILURE OF ANY OTHER PERSON OR ENTITY TO PERFORM ITS RESPONSIBILITIES, FIRE OR OTHER HAZARD, ACCIDENT, IMPROPER STORAGE, MIS-USE, NEGLECT, POWER OR ENVIRONMENTAL CONTROL MALFUNCTIONS, DAMAGE FROM LIQUIDS, OR ANY OTHER CAUSE BEYOND THE NORMAL RANGE OF USE. REGARDLESS OF HOW CAUSED, IN NO EVENT SHALL MILNOR BE LIABLE FOR SPECIAL, INDIRECT, PUNITIVE, LIQUIDATED, OR CONSEQUENTIAL COSTS OR DAMAGES, OR ANY COSTS OR DAMAGES WHATSOEVER WHICH EXCEED THE PRICE PAID TO MILNOR FOR THE EQUIPMENT IT SELLS OR FURNISHES.

THE PROVISIONS ON THIS PAGE REPRESENT THE ONLY WARRANTY FROM MILNOR AND NO OTHER WARRANTY OR CONDITIONS, STATUTORY OR OTHERWISE, SHALL BE IMPLIED.

WE NEITHER ASSUME, NOR AUTHORIZE ANY EMPLOYEE OR OTHER PERSON TO ASSUME FOR US, ANY OTHER RESPONSIBILITY AND/OR LIABILITY IN CONNECTION WITH THE SALE OR FURNISHING OF OUR EQUIPMENT TO ANY BUYER.

BMP720097/19036

BIUUUD19 (Published) Book specs- Dates: 20081231 / 20081231 / 20081231 Lang: ENG01 Applic: UUU

How to Get the Necessary Repair Components

This document uses Simplified Technical English.
Learn more at http://www.asd-ste100.org.

You can get components to repair your machine from the approved supplier where you got this machine. Your supplier will usually have the necessary components in stock. You can also get components from the Milnor® factory.

Tell the supplier the machine model and serial number and this data for each necessary component:

- The component number from this manual
- The component name if known
- The necessary quantity
- The necessary transportation requirements
- If the component is an electrical component, give the schematic number if known.
- If the component is a motor or an electrical control, give the nameplate data from the used component.

To write to the Milnor factory:

Pellerin Milnor Corporation
Post Office Box 400
Kenner, LA 70063-0400
UNITED STATES

Telephone: 504-467-2787
Fax: 504-469-9777
Email: parts@milnor.com

— End of BIUUUD19 —

BIUUUK01 (Published) Book specs- Dates: 20130308 / 20130308 / 20130308 Lang: ENG01 Applic: PCR UUU

How to Use Milnor® Electrical Schematic Diagrams

Milnor® electrical schematic manuals contain a table of contents/component list and a set of schematic drawings. These documents are cross referenced and must be used together.

The table of contents/components list shows, for every component on every schematic in the manual, the component item number (explained in detail below), statement of function, parent schematic number, part number, description and electric box location. In older manuals, two component lists are provided: List 1 sorts the components by function, and List 2 by type of component. Newer schematic manuals include only the list sorted by component number.

The schematic drawings use symbols for each electromechanical component, and indicate the function of each. Integrated circuits are not shown, but the function of each microprocessor input and output is stated. Certain electrical components not pertinent to circuit logic, such as wire connectors, are not represented on the schematic.

Most machines require several schematics to describe the complete control system and all the options available on the included models. In most manuals there are some schematic pages that don't apply to your specific machine because certain options and configurations are mutually exclusive or are not necessary in all markets. You may find it helpful to mark or remove such pages. A schematic page that only applies to a subset of machines will normally state, in the title, which models and/or options it covers. Compare this with the nameplate on your machine and with your purchase records.

Each schematic is devoted to circuits with common functions (e.g., microprocessor inputs, motor contactors). Schematics appear in the manual in alphanumeric order.

1. Component Prefix Classifications and Descriptions

Component item numbers consist of up to six characters and appear as part of a component's symbol on the schematic. The first two characters indicate the general class of component, and the remaining characters are a mnemonic for the function. For example, “CD” is the code for all time delay relays, and “SR” stands for safety reset. Thus, CDSR is a time delay relay that serves as a safety reset.

The following are descriptions of electrical components used in Milnor® machines. Descriptions are in alphabetical order by the component class code (two character prefix).

> **Note 1:** Some component class codes do not have a corresponding symbol, but are represented by a box and an accompanying note describing the component. Examples of such codes are BA (printed circuit board), ED (electronic display), and ES (electronic power supply).

BA=Printed Circuit Board—Insulating substrate on which a thin pattern of copper conductors has been formed to connect discrete electronic components also mounted on the board.

CB=Circuit Breaker (Figure 1)—Automatic switch that opens an electric circuit in abnormal current conditions (e.g., an overload).

Figure 1: Circuit Breaker (CB)

CD=Control, Time Delay Relay (Figure 2)—A relay whose contacts switch only after a fixed or adjustable delay, once voltage has been applied to its coil. The contacts switch back to normal (de-energized state) immediately when the voltage is removed.

Figure 2: Time Delay Relay (CD)

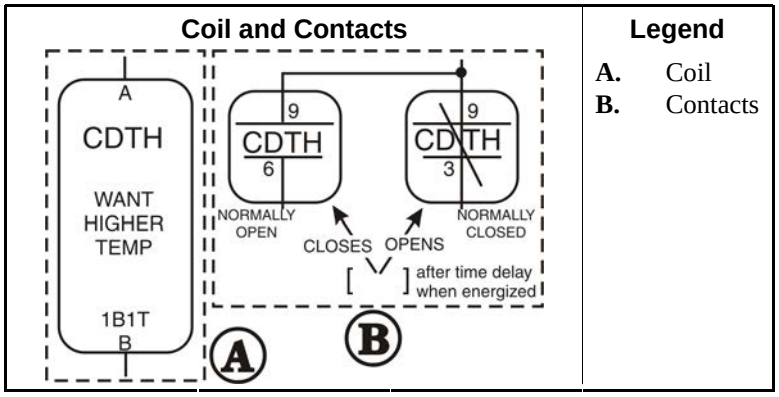

CL=Control, Latch Relay (Figure 3)—A relay which latches in an energized or set position when operated by one coil (the latch/set coil). The relay stays latched even though coil voltage is removed. The relay releases or unlatches when voltage is applied to a second coil (the unlatch/reset coil).

Figure 3: Latch Relay (CL)

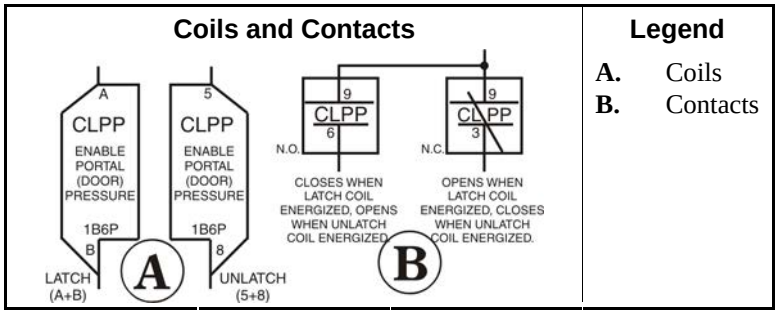

CR=Control, Relay (Figure 4)—A relay whose contacts switch immediately when voltage is applied to its coil and revert to normal when the voltage is removed.

Figure 4: Standard Relay (CR)

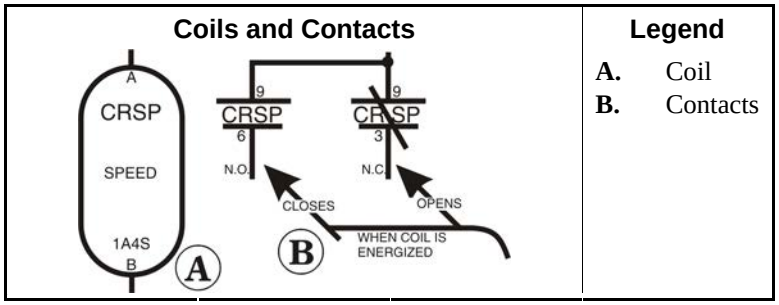

CP=Control, Photo-Eye (Figure 5)—Photo-eyes sense the presence of an object without direct physical contact. Photo-eyes consist of a transmitter, receiver, and output module. These components may be housed in one assembly with the transmitter bouncing light off of a reflector to the receiver, or these components can be housed in two separate assemblies with the transmitter pointed directly at the receiver. The photo-eye can be set to turn on its output either when the light beam becomes blocked (dark operate) or when it becomes un-blocked (light operate).

Figure 5: Photo-eye (CP)

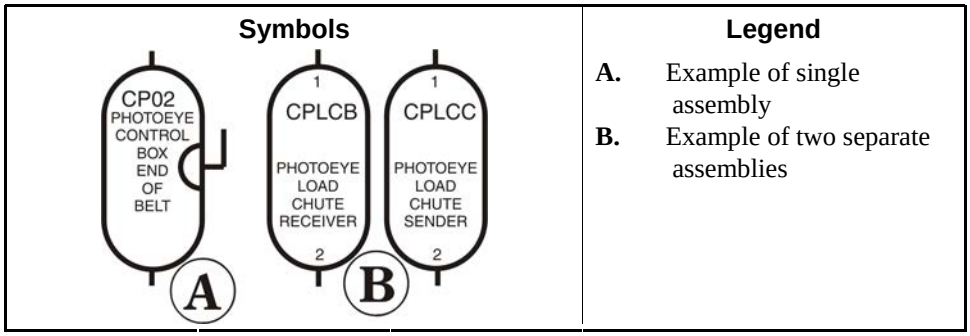

CS=Control, Contactor/Motor Starter (Figure 6)—A relay capable of handling heavier electrical loads, usually a motor.

Figure 6: Other Control Symbols

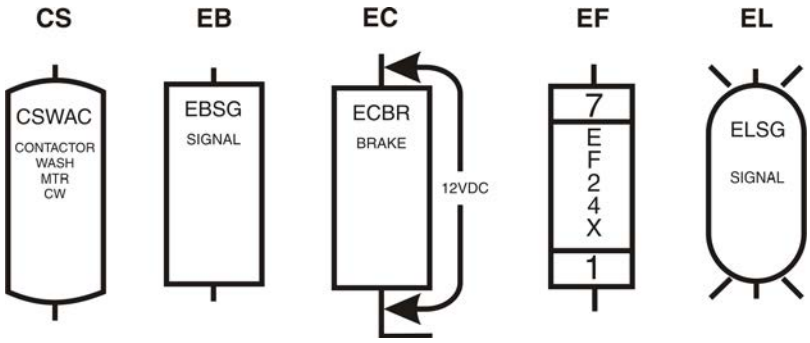

EB=Electric Buzzer (Figure 6)—An audible signaling device.

EC=Electric Clutch (Figure 6)—A clutch consists of a coil and a rotor. The rotor has two separate rotating plates. These plates are free to rotate independent of each other until the coil is energized. Once energized the two plates turn as one.

ED=Electronic Display—A visual presentation of data, such as an LCD (liquid crystal display), LED (light emitting diode) display, or VFD (vacuum florescent display).

EF=Electric Fuse (Figure 6)—A fuse is an over-current safety device with a circuit opening fusible member which is heated and severed by the passage of over-current through it.

EL=Electric Light (Figure 6)—Indicator lights may be either incandescent or fluorescent.

EM=Electro Magnet Solenoid—A device consisting of a core surrounded by a wire coil through which an electric current is passed. While current is flowing, iron is attracted to the core (e.g., a pinch tube drain valve solenoid).

ES=Electronic Power Supply—A device that converts AC (alternating current) to filtered and regulated DC (direct current). The input voltage to the power supply is usually 120 or 240 VAC. The output is +5, +12, and -12 VDC.

ET=Thermal Overload (Figure 7)—A safety device designed to protect a motor. A thermal overload consists of an overload block, heaters, and an auxiliary contact. The auxiliary contact is normally installed in a safety (three-wire) circuit that stops power to the motor contactor coil when a motor overload occurs.

Figure 7: Thermal Overload (ET)

Schematic Symbol	Legend
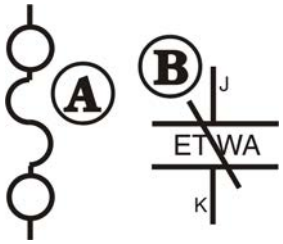	**A.** Heater (one per phase) **B.** Overload relay; contacts open if overload condition exists

EX=Electrical Transformer (Figure 8)—A device that transfers electrical energy from one isolated circuit to another, often raising or lowering the voltage in the process.

KB=Keyboard—Device similar to a typewriter for making entries to a computer.

MN=Electronic Monitor (CRT)—A cathode ray tube used for visual presentation of data.

MR=Motors (Figure 9)—Electromechanical device that converts electrical energy into mechanical energy.

Figure 8: Transformer (EX)

Figure 9: Electric Motor (MR)

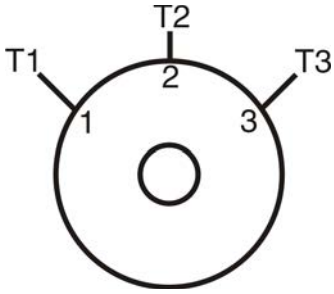

MV=Motor (Variable Speed) Inverter—To vary the speed of an AC motor, the volts to frequency ratio must be kept constant. The motor will overheat if this ratio is not maintained. The motor variable speed inverter converts three phase AC to DC. The inverter then uses this DC voltage to generate AC at the proper voltage and frequency for the commanded speed.

Note 2: Switch symbols used in the schematics and described below always depict the switch in its un-actuated state.

PX=Proximity Switch (Figure 10)—A device which reacts to the proximity of an target without physical contact or connection. The actuator or target causes a change in the inductance of the proximity switch which causes the switch to operate. Proximity switches can be two-wire (AC) or three-wire (DC) devices.

Figure 10: Proximity Switches (PX)

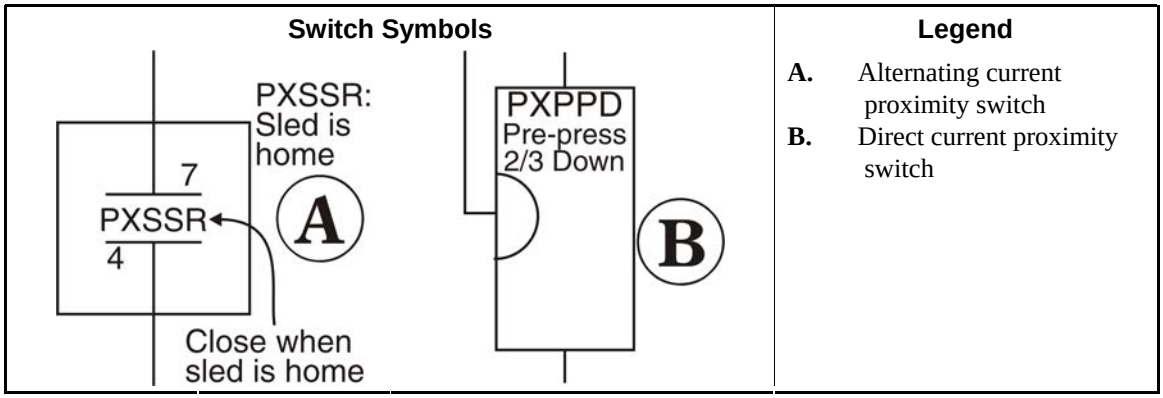

SC=Switch, Cam Operated (Figure 11)—A switch in which the electrical contacts are opened and/or closed by the mechanical action of a cam(s). Applications include 35-50 pound timer operated machines, Autospot, timer reversing motor assembly, and some balancing systems.

SH=Switch, Hand Operated (Figure 12)—A switch that is manually operated (e.g., *Start button*, *Master switch*, etc.).

Figure 11: Cam Switch (SC)

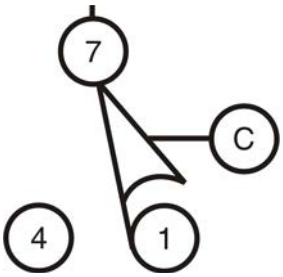

Figure 12: Hand Operated Switch (SH)

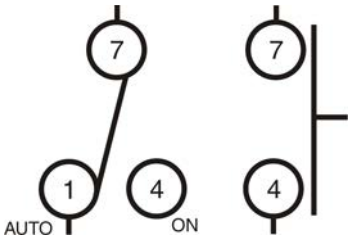

SK=Switch, Key Lock (Figure 13)—A switch that requires a key to operate. This prevents unauthorized personnel from gaining access to certain functions (e.g., the *Program menu*).

SL=Switch, Level Operated (Figure 14)—A switch connected to a float that causes the switch to open and close as the level changes.

Figure 13: Key Switch (SK)

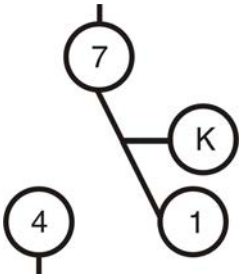

Figure 14: Level Switch (SL)

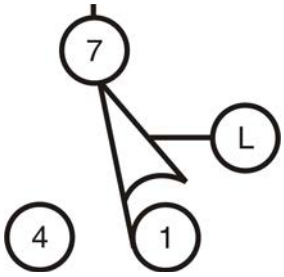

SM=Switch, Mechanically Operated (Figure 15)—A switch that is mechanically operated by a part of or the motion of the machine (e.g., door closed switch, tilt limit switches, etc.)

SP=Switch, Pressure Operated (Figure 16)—A switch in which a diaphragm presses against a switch actuator.

Figure 15: Mechanical Switch (SM)

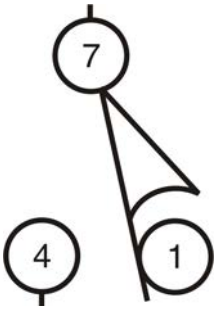

Figure 16: Pressure Switch (SP)

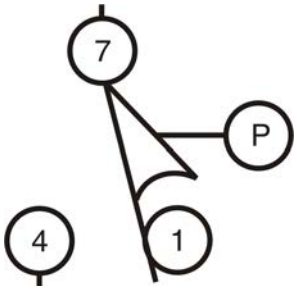

ST=Switch, Temperature Operated (Figure 17)—A switch that is actuated at a preset temperature (e.g., dryer safety probes) or has adjustable set points (e.g., Motometers or Combistats).

TB=Terminal Board (Figure 18)—A strip or block for attaching or terminating wires.

Figure 17: Temperature Switch (ST)

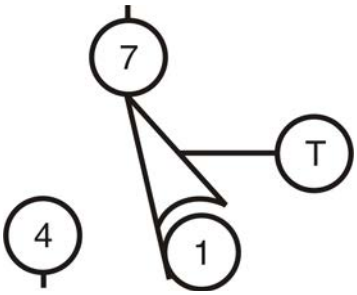

Figure 18: Terminal Board (TB)

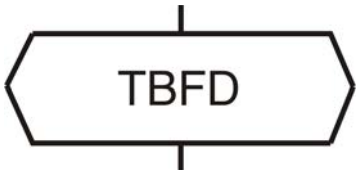

VE=Valve, Electric Operated (Figure 19)—A valve operated by an electric coil to control the flow of fluid. The fluid can be air, water or hydraulic.

Figure 19: Electrically Operated Valve (VE)

ZF=Rectifier (Figure 20)—A solid state device that converts alternating current to direct current.

Figure 20: Bridge Rectifier (ZF)

Component Symbol	Legend
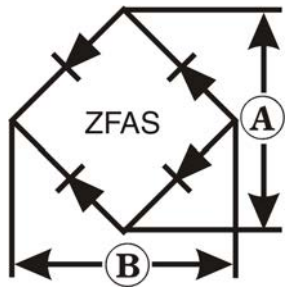	**A.** Alternating current input **B.** Direct current output

Figure 21: Bridge Rectifier

Component	Legend
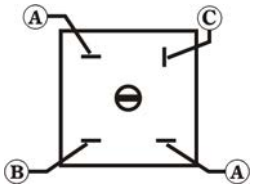	**A.** Alternating current in **B.** Negative direct current out **C.** Positive direct current out

WC=Wiring Connector—A coupling device for joining two cables or connecting a cable to an electronic circuit or piece of equipment. Connectors are male or female, according to whether they plug into or receive the mating connector.

2. Component Terminal Numbering

CAUTION 1: Risk of Mis-wiring—Due to electrical component manufacturing inconsistencies, the pin numbers imprinted on components such as connectors and relay bases used on Milnor machines often do not correspond to the pin numbers shown in the schematics.

- Ignore pin numbers imprinted on in-line connectors (e.g., Molex connectors) and relay bases.
- Use the pin identification illustrations herein to identify pins on these components.

Figure 22: Plug-in Relays

11-pin Relay with Grey Base

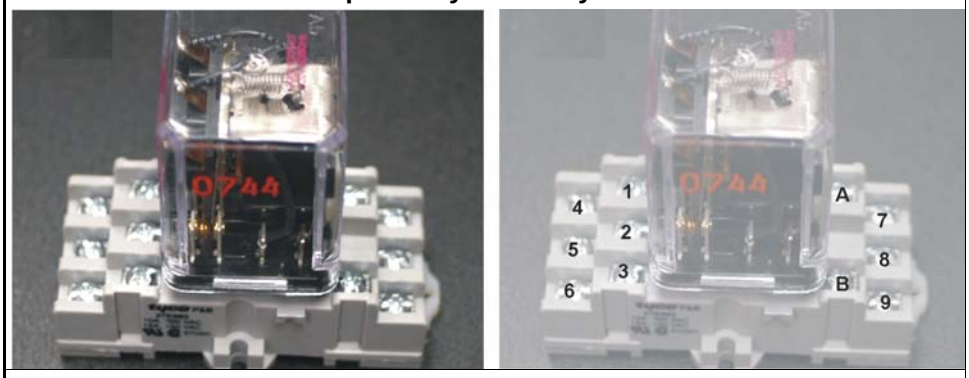

14-pin Relay with Grey Base (older)

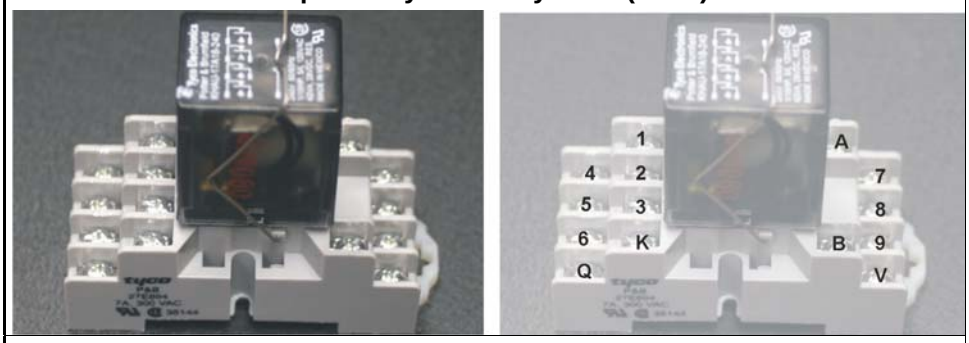

14-pin Relay with Black Base (newer)

14-pin Relay with Beige Base (rare)

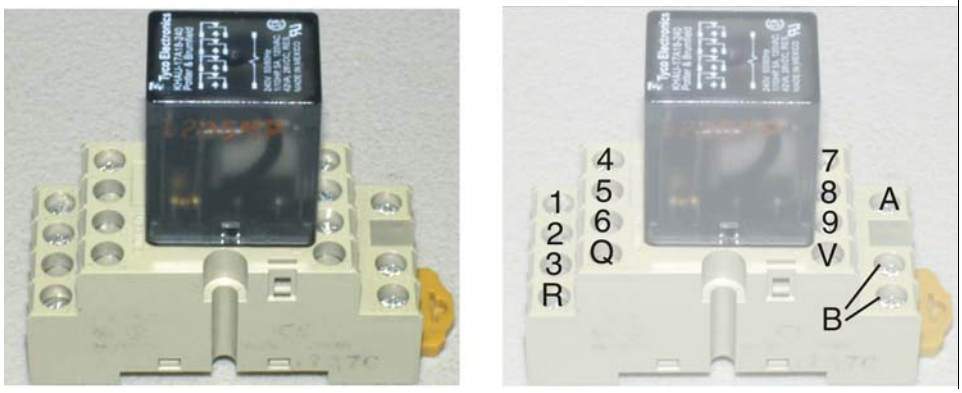

Legend

Left. View of relay and base

Right. Same view, showing pin numbers

Note 3: Relay functional names ending with the letter "M" (e.g., CRxxM) are not discrete components but are a component of a printed circuit board. They are usually not individually replaceable.

Figure 23: AMP Connector Pin Locations

36-pin Connector

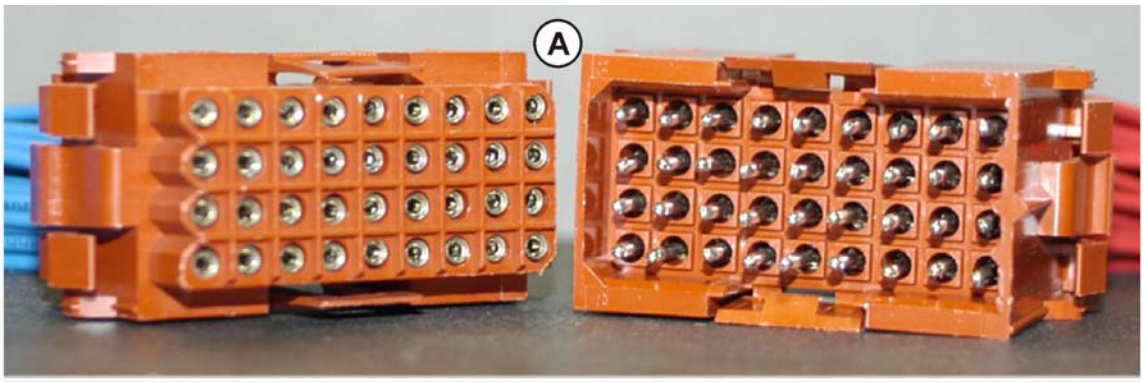

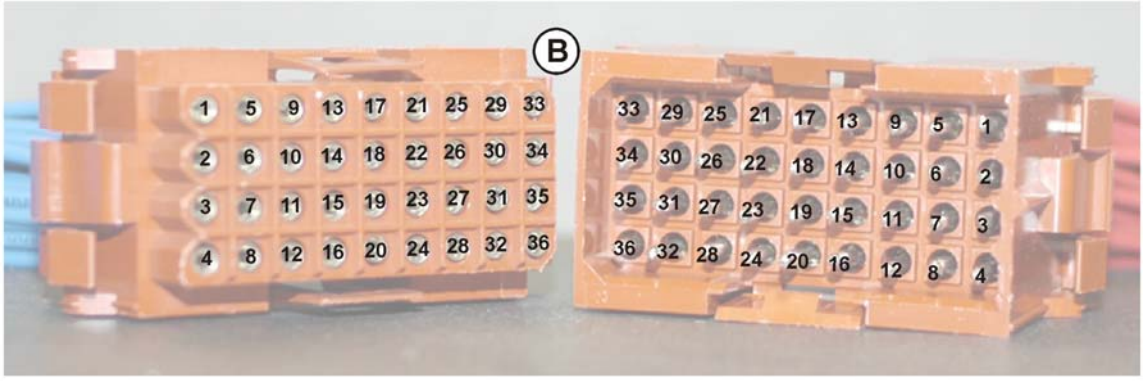

18-pin Connector

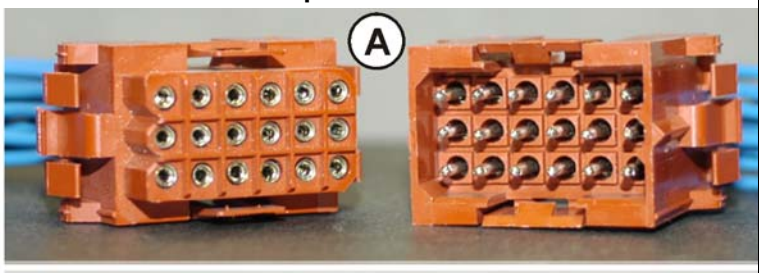

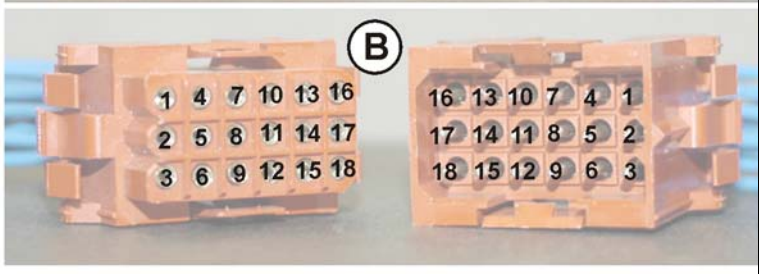

Legend

A. View of mating halves of connector
B. Same view, showing assigned pin numbers

Figure 24: Molex Connector Pin Locations

15-pin Connector

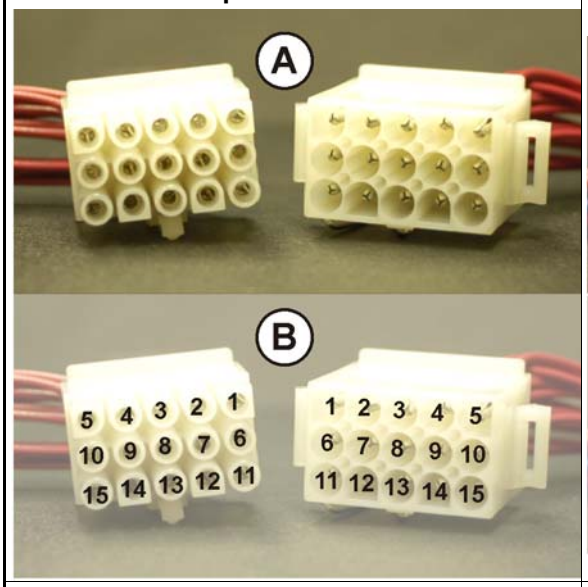

9-pin Connector

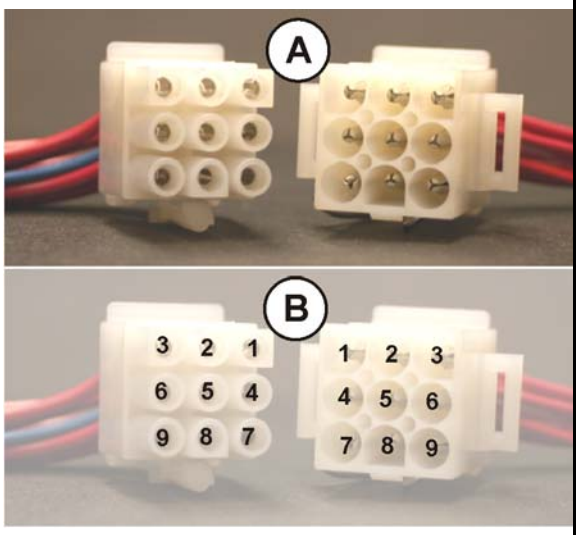

6-pin Connector

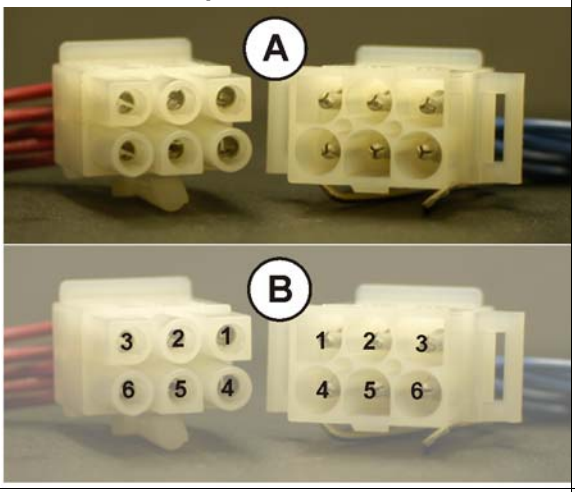

4-Pin Connector

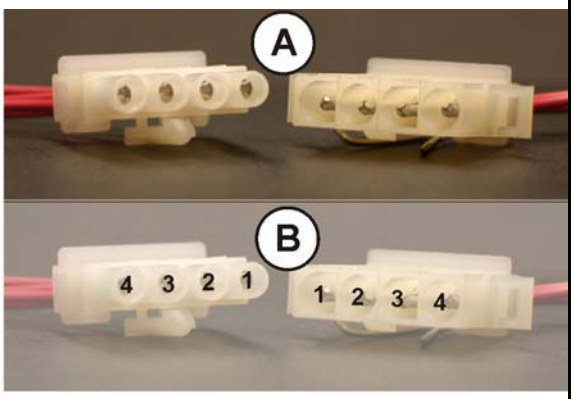

2-pin Connector

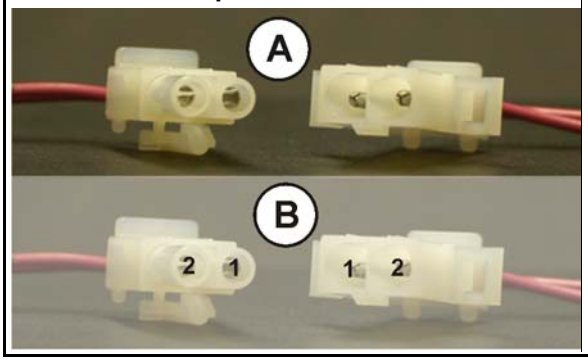

Legend

A. View of mating halves of connector
B. Same view, showing assigned pin numbers

Figure 25: Pressure Switch

Component	Legend
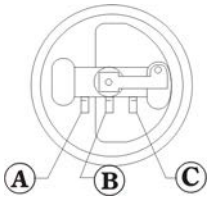	**A.** Contact 1—Normally open **B.** Contact 2—Normally closed **C.** Contact 3—Common

Figure 26: Toggle Switch

Component	Legend
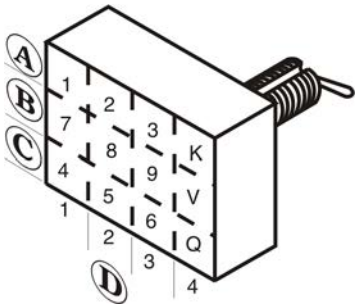	**A.** Normally closed contacts **B.** Common contacts **C.** Normally open contacts **D.** Pole

Figure 27: Switch with Replaceable Contact Blocks

Rotary or Push-button Switch Component	Legend
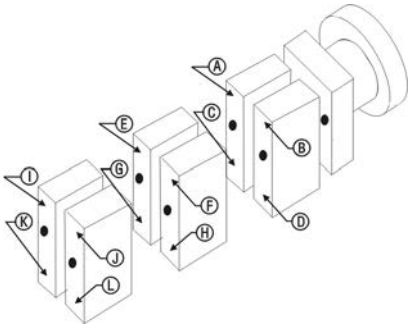	**A.** Terminal 7 **B.** Terminal 8 **C.** Terminal 4 if normally open; terminal 1 if normally closed **D.** Terminal 5 if normally open; terminal 2 if normally closed **E.** Terminal V **F.** Terminal 9 **G.** Terminal Q if normally open; terminal K if normally closed **H.** Terminal 6 if normally open; terminal 3 if normally closed **I.** Terminal W **J.** Terminal X **K.** Terminal R if normally open; terminal L if normally closed **L.** Terminal S if normally open; terminal M if normally closed

3. Features of Milnor® Electrical Schematic Diagrams

Document BMP010012 (following this section) is a sample schematic, based on a schematic diagram for the Milnor® gas dryer. For the purposes of this exercise, the schematic is shown gray and explanations of the items on the schematic are shown black.

The item numbers below correspond to the circled item numbers shown on the drawing.

1. The first six characters of the drawing number (W6DRYG) indicate that this is a wiring diagram (W), identify the generation of controls (6), and identify the type of machine (DRYG=Gas Dryer). These characters appear in the drawing number of every schematic in the set.

   The characters following the first six are unique to each drawing. The two characters identified as the page number are an abbreviation for the function performed by the depicted

circuitry (S+=three-wire circuit) and establish the order in which the schematic occurs in the manual (schematics are arranged in alpha-numeric order in the manual).

Whenever circuitry changes are significant enough to warrant publishing a new schematic drawing, the new drawing number will be the same as the old except for the major revision letter (A in the example).

2. Included in the drawing title are the class of control system, the title of this circuit, and the circuit voltage.
3. Line numbers are provided along the bottom edge of the drawing. These permit service personnel in the field and at the Milnor® factory to quickly relate circuit locations when discussing troubleshooting over the phone. Page and line numbers are referenced on the drawing as explained in items five and six below.
4. Relay contacts show the page and line number on which the relay coil may be found. This is the type of cross referencing most frequently used in troubleshooting.
5. Relay coils show the page and line number on which its associated contacts are located.
6. Relay contacts and relay coils show the physical location of the relay.
7. The designation MTA applies to electronic circuit board connections. Typically, a control system will contain several different types of circuit boards and one or more boards of each type. A numerical suffix identifies the board type and a numerical prefix identifies which one of several boards of a given type is being depicted. For example, the designation 1MTA5 identifies this as the first I/O board (8 output, 16 input board) in the control system. As shown on the drawing, a pin number follows the board number, separated by a dash. Thus, 1MTA5-9 is pin 9 on this board. The numerical designations for board types vary from one control system to another. Some of the board types commonly encountered on the Mark V and Mark VI washer-extractor control and their designations are as follows:
   - MTM1-MTM8 = Mother board
   - MTA1-MTA5 = 8 output, 16 input (8/16) boards
   - MTA11-MTA14 = 24 output boards
   - MTA30-MTA40 = processor boards
   - MTA41-MTA43 = digital to analog (D/A) boards
   - MTA51-MTA55 = analog to digital (A/D) boards
   - MTA81-MTA85 = balance A-D board

   The complete listing of the boards utilized in a given control system can be found in the component list for that system.
8. Wire numbers, as described earlier in this section, are shown at appropriate locations on the schematic drawing.
9. Where diamond symbols appear at the end of a conductor, these are match points for continuing the schematic on another drawing. The page and line number that continues the circuit is printed adjacent to the diamond symbol. Where more than one match point appears on the referenced page, match diamonds containing corresponding letters.

— End of BIUUUK01 —

This page intentionally left blank.

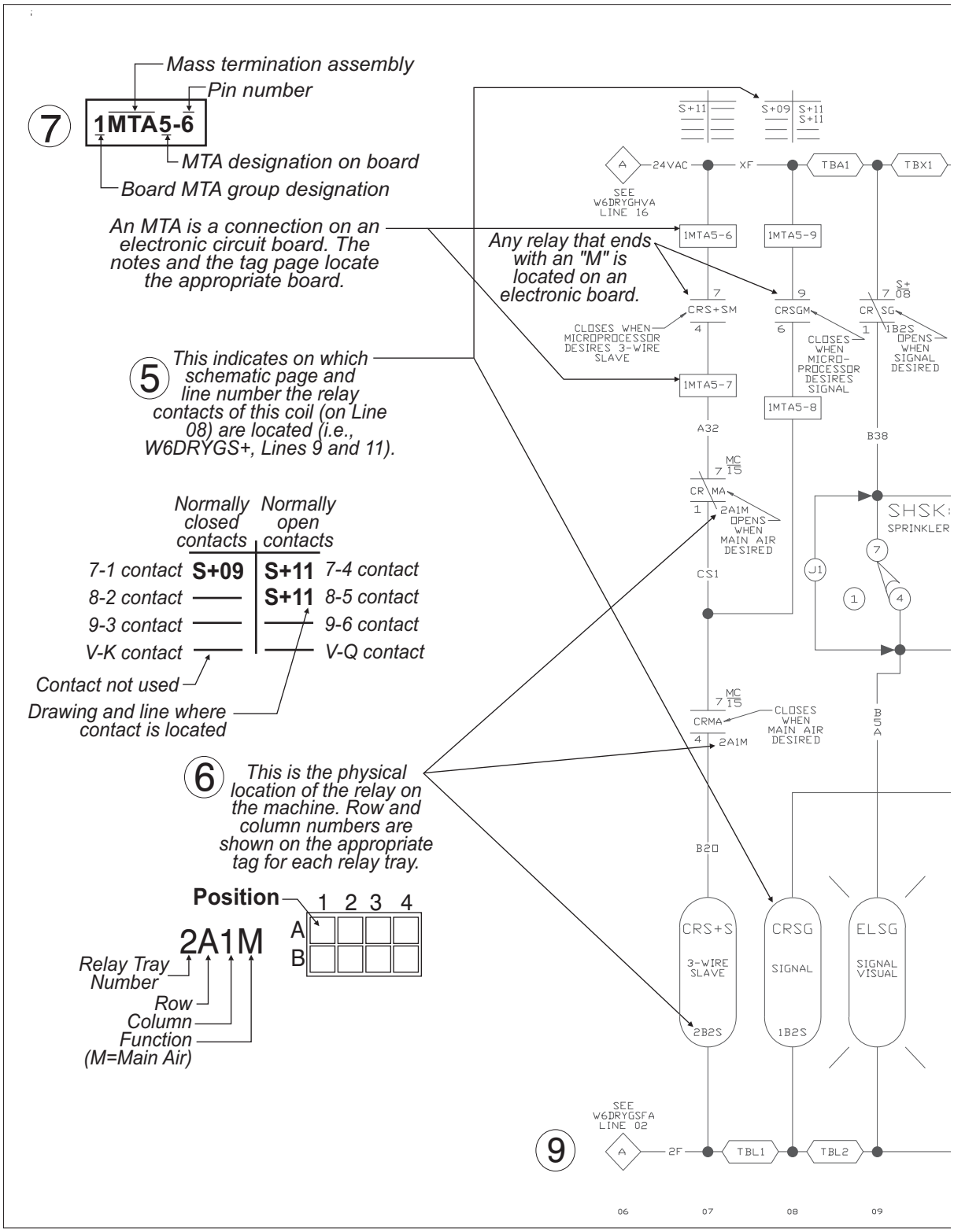

BMP010012 (left) / 2018343

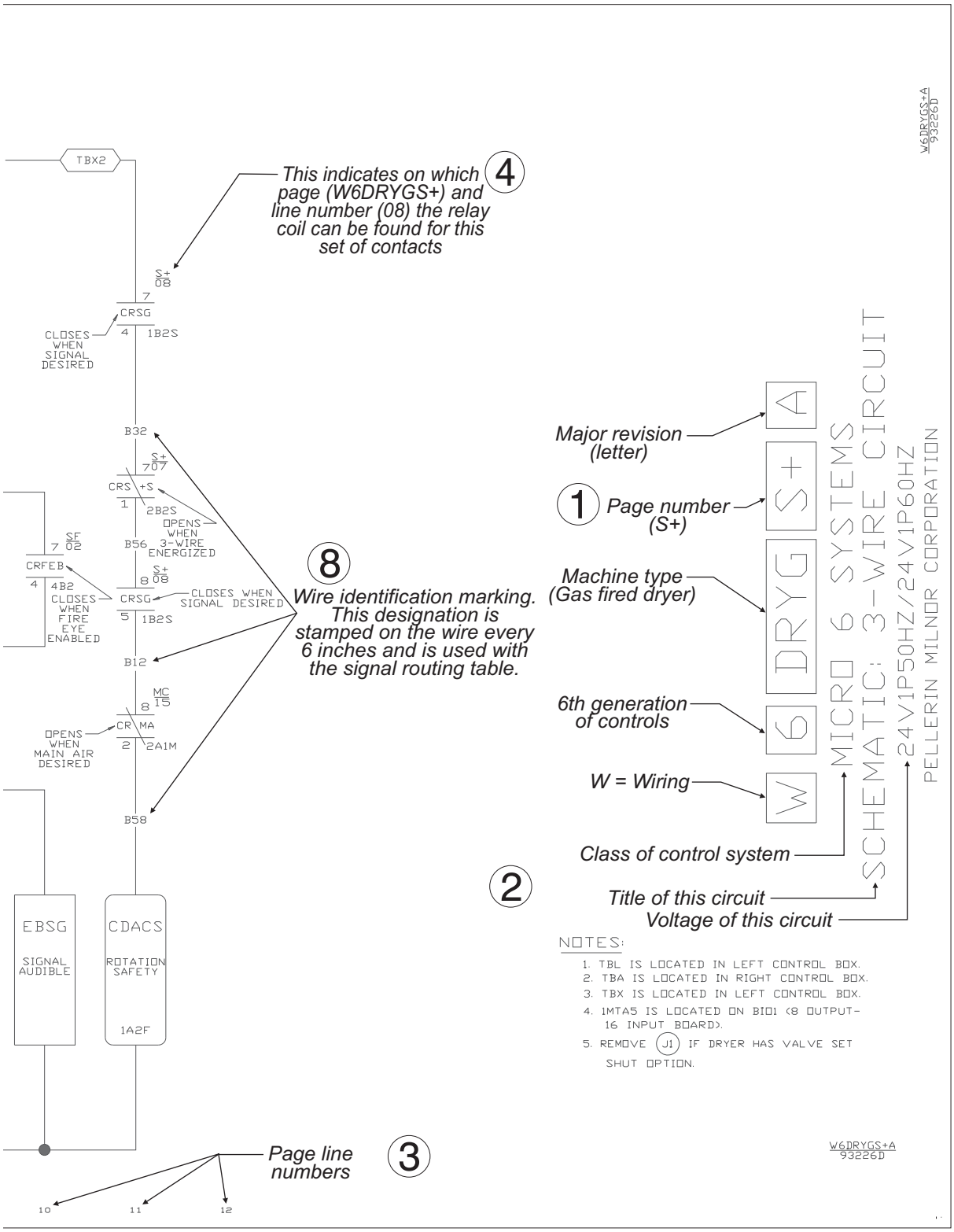

BMP010012 (right) / 2018343

On-Site Control Connections for Device Master, PC Device Master, Linear Costa, and Linear Costa Master

This document applies to the following controllers when used to control Milnor flat bed conveyors:

- **Device Master and PC Device Master**—Both of these controllers permit up to four, or up to eight devices (depending on the capacity specified) to be independently controlled and used for any of several specialized purposes (see Note 1). Device Master works with the older Miltrac system in a central controls mounting panel (belt box). PC Device Master works with newer MultiTrac systems.
- **Liner Costa Controller**—permits a single conveyor to be used as a multi-cake storage device (see Note 2).
- **Linear Costa Master Controller**—permits up to four, or up to eight conveyors (depending on the capacity specified) to be independently controlled and used as multi-cake storage devices (see Note 2).

Note 1: Device Master and PC Device Master provide for seven device types (seven specialized functions). Five apply to conveyors. One—the "non-storage belt" type—can apply to either a conveyor or a phantom belt. In the latter case, no physical connections are required because there is no physical device. The remaining function, called "allied dryer", provides for using allied dryers in a Miltrac or MultiTrac system with greater functionality than a machine-to-machine allied interface would provide. This device type only involves allied interface connections.

Note 2: As of this writing, Linear Costa and Linear Costa Master products specifically for use in MultiTrac systems have not been implemented.

These controllers perform two types of functions that require on-site wiring:

1. Each serves as a machine controller for conveyor belts. In this respect, these controllers are comparable to the microprocessor controller on any machine (except that a single Device Master or Linear Costa Master can act as several controllers—one for each belt they control). But because these controllers are located in a central control cabinet shipped and installed separately from the conveyor(s), the machine functions must be "wired in" on site, as described herein.
2. Because the conveyor(s) can receive from, and discharge to allied (non-Milnor) devices, each controller can communicate with the allied equipment via allied interfaces. Allied interface connections are made on site. Refer to manual MTPALI01 "Allied Interfaces for Milnor Automated Laundering System Machines..." for more information.

Although these controllers communicate with Miltrac, the serial links are normally wired at the factory because all components are housed in the same cabinet. However, the connection procedures are described in document BICCUC01, "On-Site Installation and Troubleshooting of Permanent Serial Communication Cables."

Regardless of the specific purpose a conveyor belt serves, all flat bed conveyors controlled by any of these controllers perform the same basic machine functions: running the belt and detecting, via photo eyes, the presence of goods. Depending on specific purpose and options, a conveyor may also perform specialized functions such as extending and retracting or signaling personnel via load lights.

1. On-Site Control Connections for Device Master, Linear Costa, or Linear Costa Master in a Miltrac™ System [Document BIYCDI02]

In a Miltrac system with the Miltrac controller mounted in a central controls mounting panel (belt box), these controllers are also mounted in the belt box. On-site connections must be made

between the controller box in the belt box and each conveyor. The standard controller-to-conveyor connections, which are the same for all three controllers, are shown in Table 1. Connections for specialized conveyor functions and for allied interfaces are not shown. Refer to the controller schematic and reference manuals, and the system layout drawings for more information.

Table 1: Standard On-Site Control Connections for Device Master, Linear Costa, and Linear Costa Master in Systems With a Miltrac Belt Box

Purpose	Cable Specification	Connection Point		
		In Controller Box		On Milnor Conveyor
		Connector	Pin	Wire (tagged)**
Motor feeds (when motor contactors are in belt box)	One set of four conductors (3-phase wiring plus ground). Each conductor: 14AWG (2.5mm²) with 600VAC insulation	ETOL****	T1	T1
		ETOL****	T2	T2
		ETOL****	T3	T3
		TB2F (ground)	any	yellow/green ground wire
Emergency Stop pull cords	Multi-conductor cable: 18AWG (1.0mm²) with 300VAC color coded insulation. Ground unused wires, one end only.	TBL	1***	Safety switch
		TBL	2***	
24VDC Photo eye power		TB24	any	24VDC
		TB2G (ground)	any	2G
Microprocessor inputs from photo eyes		TB_*	5	Load end phooey input
		TB_*	6	Discharge end phooey input

* Character in third position varies with the (device) as follows: B = belt 0, D = belt 1, E = belt 2, F = belt 3, G = belt 4, H = belt 5, J = belt 6, K = belt 7. Example: TBB is for belt 0.

** Wire-to-wire connections (white cap). Wires are located in one or more junction boxes mounted on the conveyor. Wires are tagged and/or color coded, as indicated.

*** In the controller box, connect the Emergency Stop switches from all conveyors together in series, using wire-to-wire (white cap) connections, then connect the entire series into the Device Master 3-wire circuit at this location. Pulling any pull cord must cause all conveyors to stop functioning until the controller is restarted.

**** The motor contactors/overloads are labeled "belt 0", belt 1", etc.

2. On-Site Control Connections for PC Device Master in a MultiTrac™ System [Document BIYCDI03]

PC Device Master incorporates both a microprocessor controller located in the MultiTrac cabinet and PC Device Master software running on the MultiTrac PC. On-site connections must be made between The Device Master controller in the MultiTrac cabinet and each Device Master-controlled device. The standard connection points for connections between Device Master and a Milnor flat bed conveyor used as a Device Master device are shown in Table 2. Connections for specialized conveyor functions and for the allied dryer device type (which only involves allied interface connections) are not shown. Refer to the Device Master schematic and reference manuals and the system layout drawings for more information.

Table 2: Device Master On-Site Control Connections in MultiTrac Systems

Purpose	Cable Specification	Connection Point			
		On Device Master Controller		Contactor Box On Conveyor	
		Connector	Pin	Connector	Pin
Emergency Stop pull cords	Multi-conductor cable: 18AWG (1.0mm²) with 300VAC color coded insulation. Ground unused wires, one end only.	TBL	1**	TBC	1
		TBL	2**	TBC	2
24VDC Photo eye power		TB24	any	TBC	7
		TB2G (ground)	any	TBC	6
Microprocessor inputs from photo eyes		TB_*	5	TBC	8
		TB_*	6	not implemented	
Microprocessor outputs to reversing contactors		TB_*	3	TBC	5
		TB_*	4	TBC	6
Earth ground		TB2F (ground)	any	TBC	4

* Character in third position varies with the (device) as follows: B = belt 0, D = belt 1, E = belt 2, F = belt 3, G = belt 4, H = belt 5, J = belt 6, K = belt 7. Example: TBB is for belt 0.

** In the Device Master control box, connect the Emergency Stop switches from all conveyors together in series, using wire-to-wire (white cap) connections, then connect the entire series into the Device Master 3-wire circuit at this location. Pulling any pull cord must cause all conveyors to stop functioning until Device Master is restarted.

— End of BIYCDI01 —

FIGURE	ELECTRICAL VALUES	SUFFIXES									
		B		H		M		T		U	
		50HZ	60HZ	50HZ	60HZ	50HZ	60HZ	50HZ	60HZ	50HZ	60HZ
A	1.000	208	230			200	220	220	240	200-220	208-240
B	$\sqrt{3}$				208	346	380	380		346-380	380
C	2.000	416	460	220	240	400	440	440	480	400-440	440-480
D	$1+\sqrt{3}$						600				600
E	$2\sqrt{3}$			380							

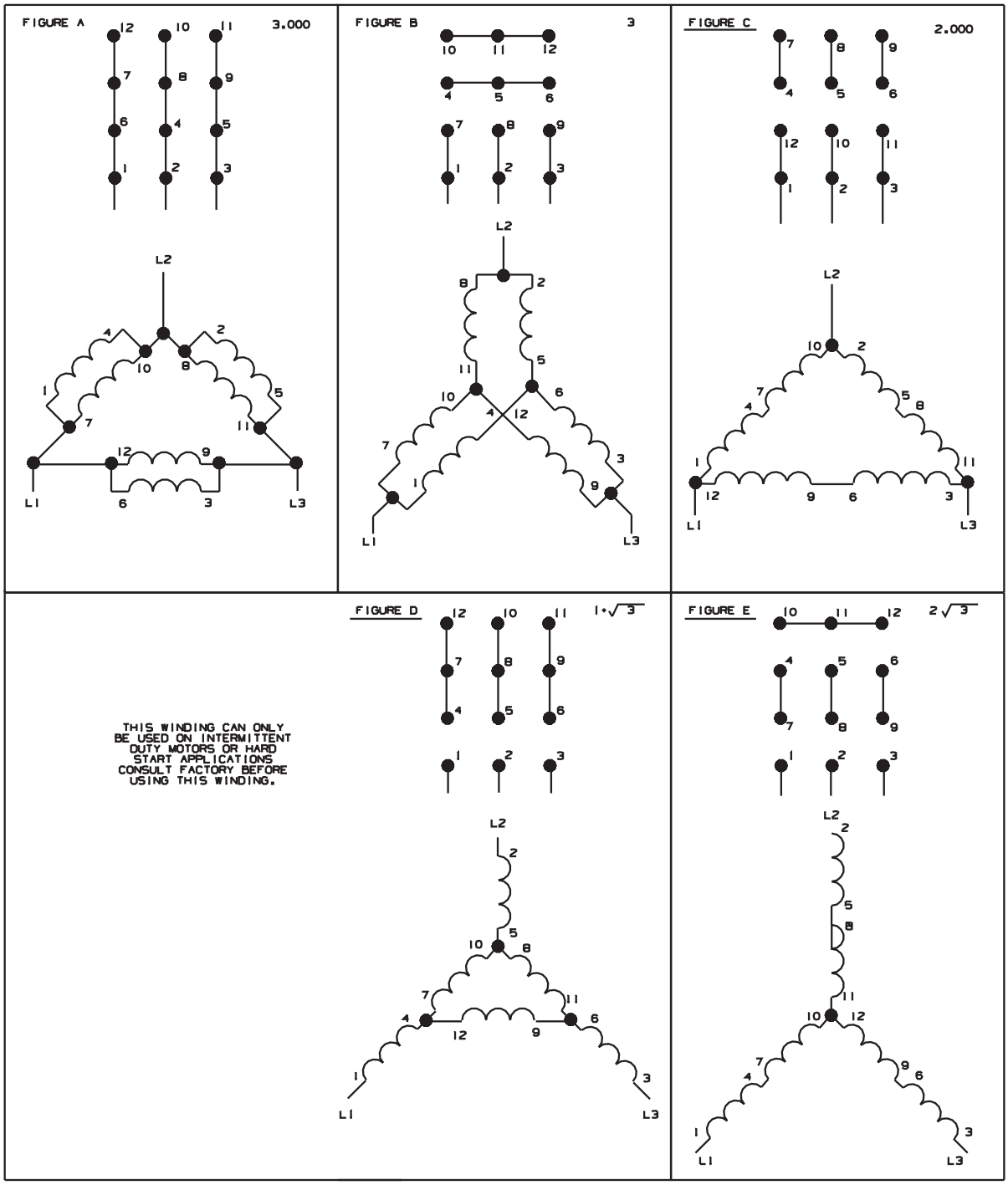

06 07 08 09 10 11 12 13 14 15 16 17

BMP850029

MOTOR CONNECTION DIAGRAMS

THREE PHASE SINGLE SPEED MOTORS WITH MULTIPLE VOLTAGE RATINGS

(ONLY FOR MOTOR SUFFIXES LISTED)

PELLERIN MILNOR CORPORATION

BMP850029 / 993628

BMP850029 / 993628

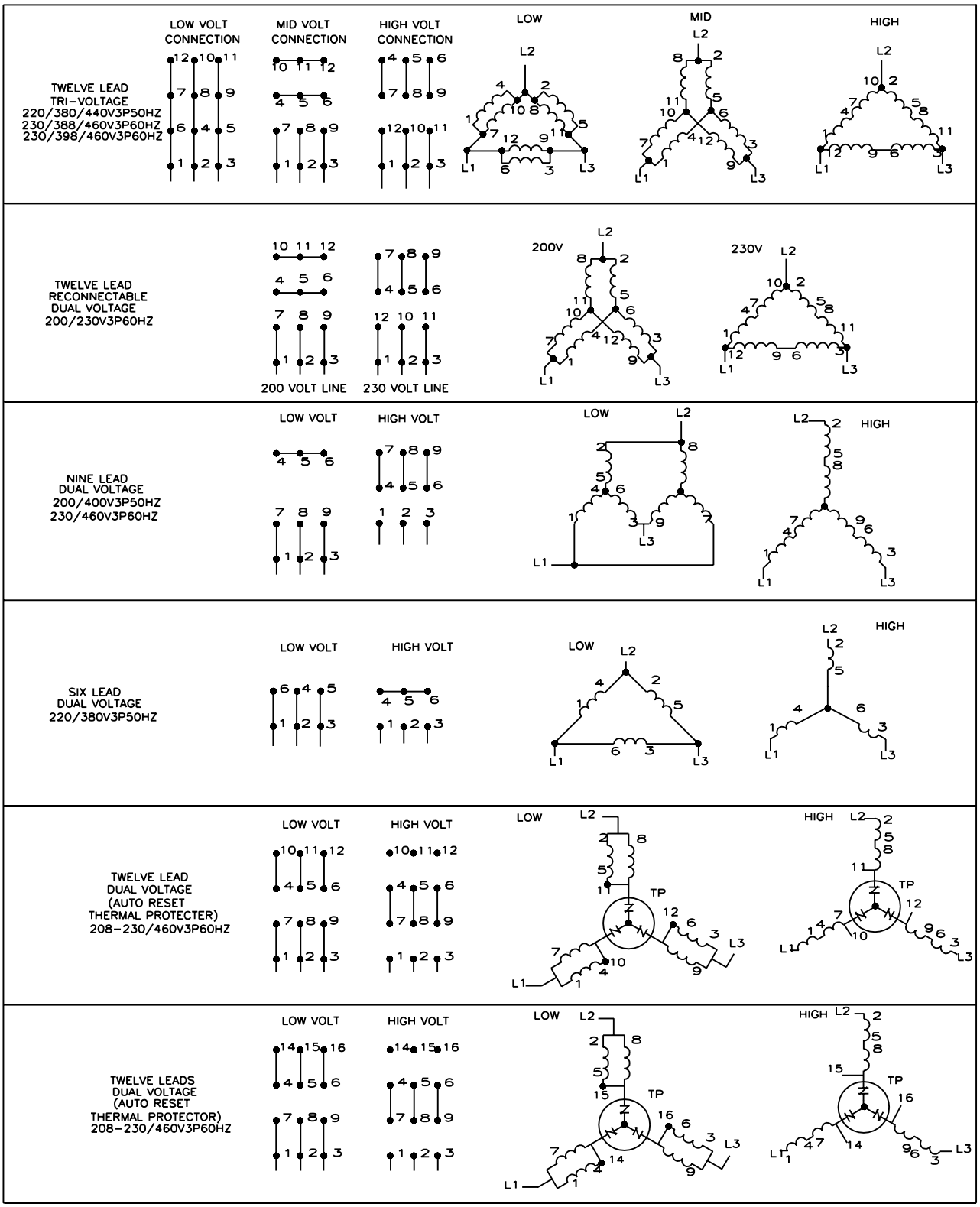

W80008

THREE PHASE
MOTOR CONNECTION DIAGRAMS
SINGLE SPEED MOTORS WITH MULTIPLE VOLTAGE RATINGS

PELLERIN MILNOR CORPORATION

W80008
2001253A

MultiTrac Console 1

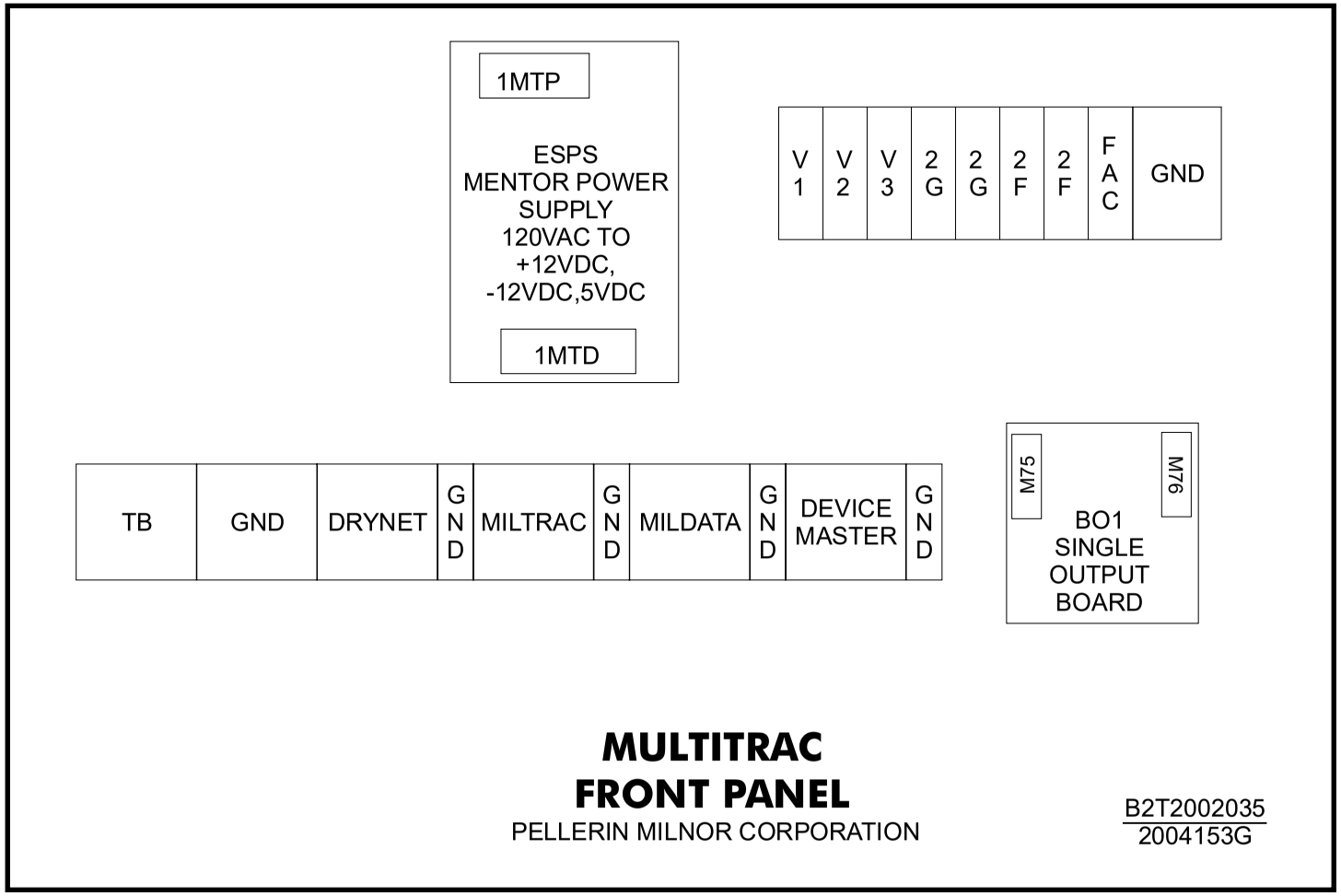

W6UT4TG1
2011353B

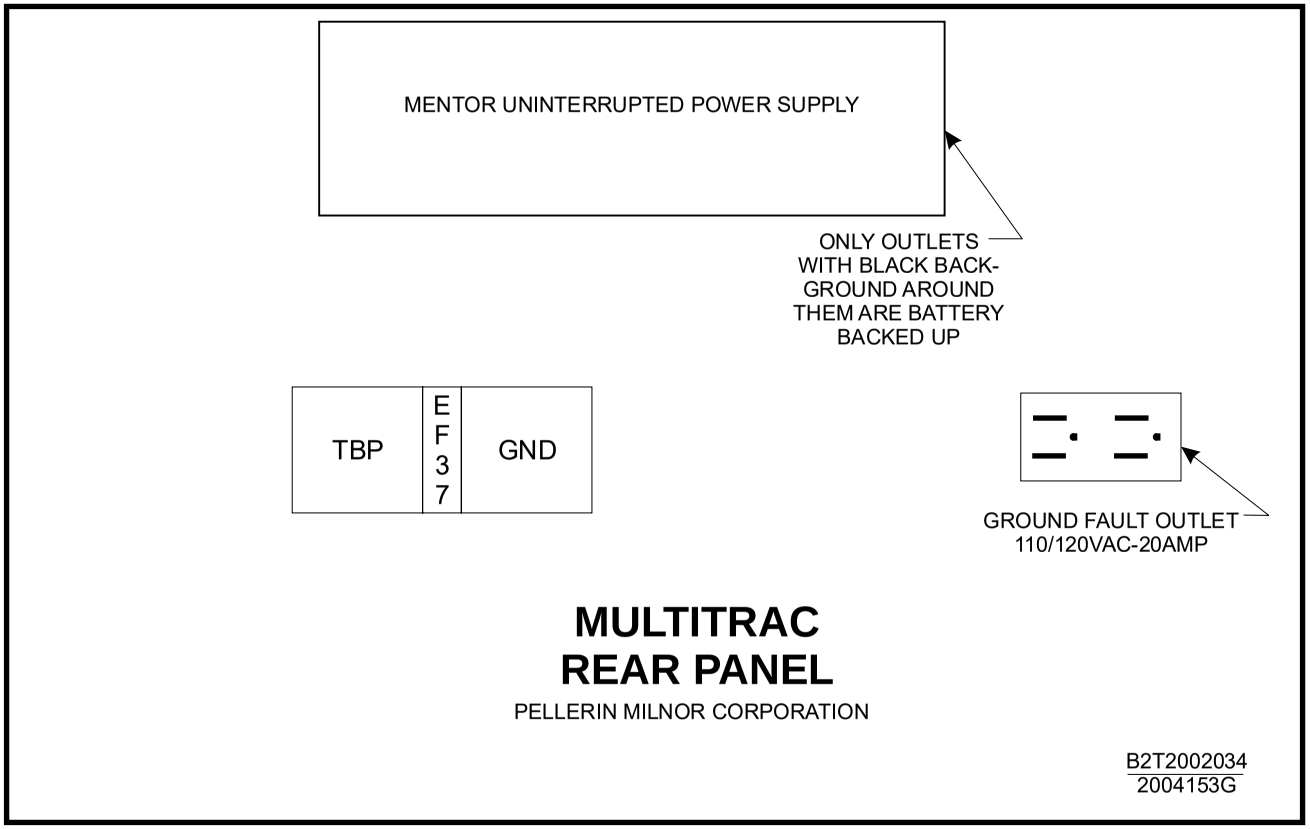

W6UT4TG1

MICRO 6 SYSTEMS
CONTROL BOX LAYOUTS

PELLERIN MILNOR CORPORATION

W6UT4TG1
2011353B

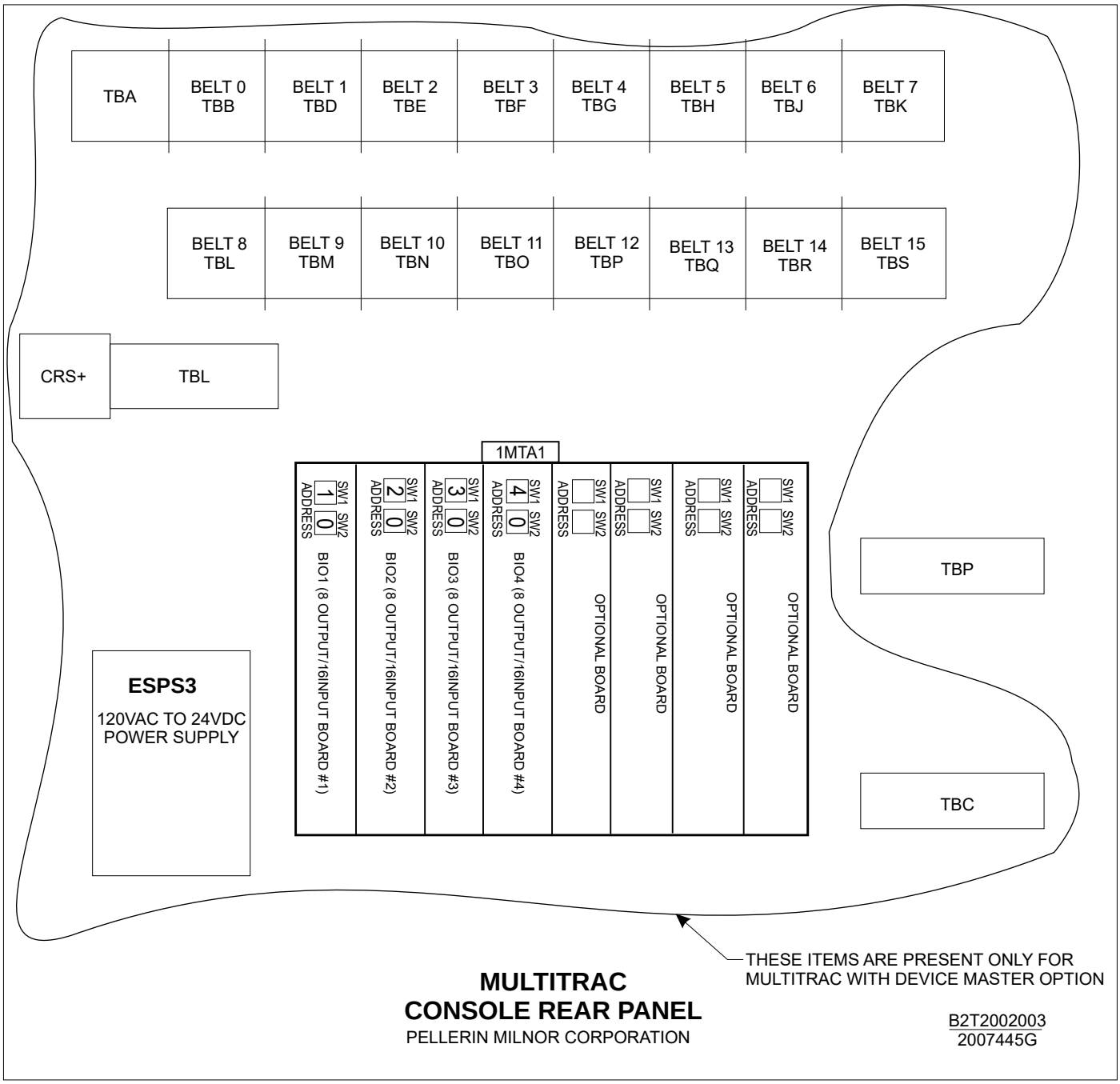

W6UT4TG2
2012235B

NOTES FOR INSTALLING EPROM:
1.EPROMS MUST BE INSTALLED IN THE CORRECT SOCKET FOR THE MACHINE TO OPERATE. FOR THIS MACHINE THERE WILL BE ONE EPROM AND IT MUST BE INSTALLED IN THE SOCKET LABELED IC2.
2. MAKE SURE THAT ALL PINS ARE IN THEIR HOLES WHEN INSERTING (BE CAREFUL NOT TO BEND PINS UNDER CHIP.)

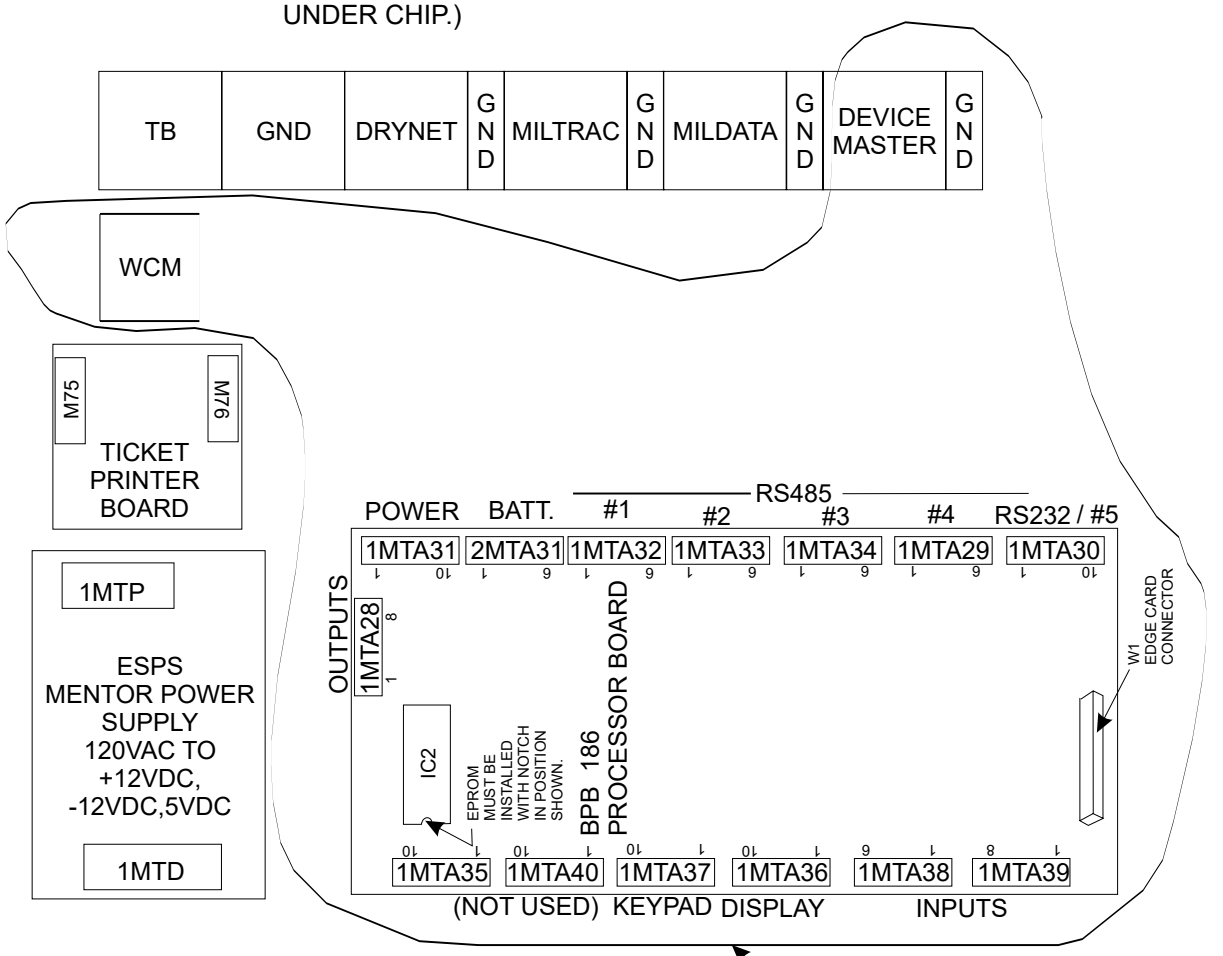

MULTITRAC
CONSOLE FRONT PANEL
PELLERIN MILNOR CORPORATION

B2T2002004
2007445G

W6UT4TG2
MICRO 6 SYSTEMS
CONTROL BOX LAYOUTS
PELLERIN MILNOR CORPORATION

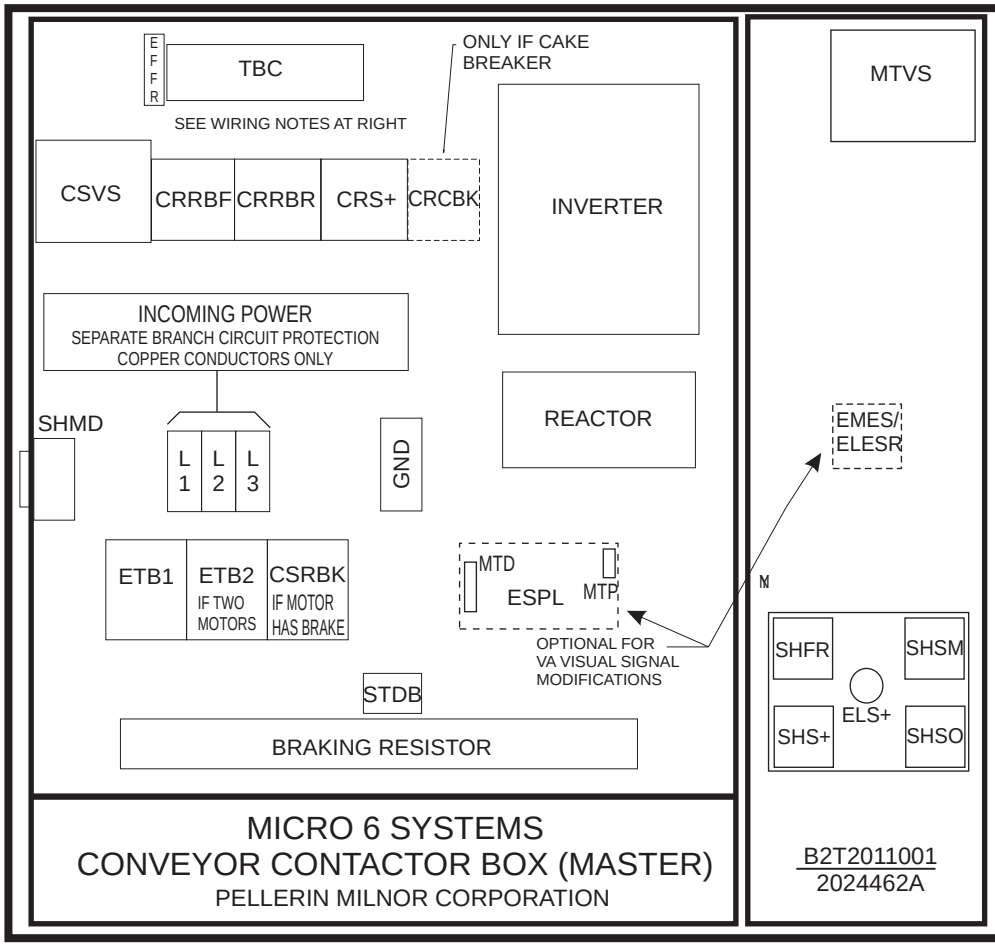

MICRO 6 SYSTEMS
CONVEYOR CONTACTOR BOX (MASTER)
PELLERIN MILNOR CORPORATION

B2T2011001
2024462A

FIELD WIRING

TBC TO MULTITRAC

TBC 0 (H)] FUSE
4 (N)] 120VAC SUPPLY
5 RUN BELT FORWARD
6 (N)] 24VDC SUPPLY
7 (H)]
8 FORWARD PHOTOEYE
9 REVERSE PHOTOEYE
10 RUN BELT REVERSE
11 3-WIRE INPUT
12 MANUAL CONTROL INPUT
13 BELT LOAD ALLOWED
14 BELT DISCH. ALLOWED
15 TO MULTITRAC TB_1

ON CONVEYOR WIRING

TBC 1] SAFETY PULL CORDS,
3] & DISCONNECTS
6] P-EYE 24VDC SUPPLY
7]
8 FORWARD P-EYE SIGNAL
9 REVERSE P-EYE SIGNAL

INTERFACE TO OPTIONAL BELTS

TBC 3A SAFETIES FROM TBC3B ON LAST BELT
3B SAFETIES TO FIRST SLAVE BELT TBC1
S+4 POST START SWITCH TO ALL SLAVE BELTS TBCS+4

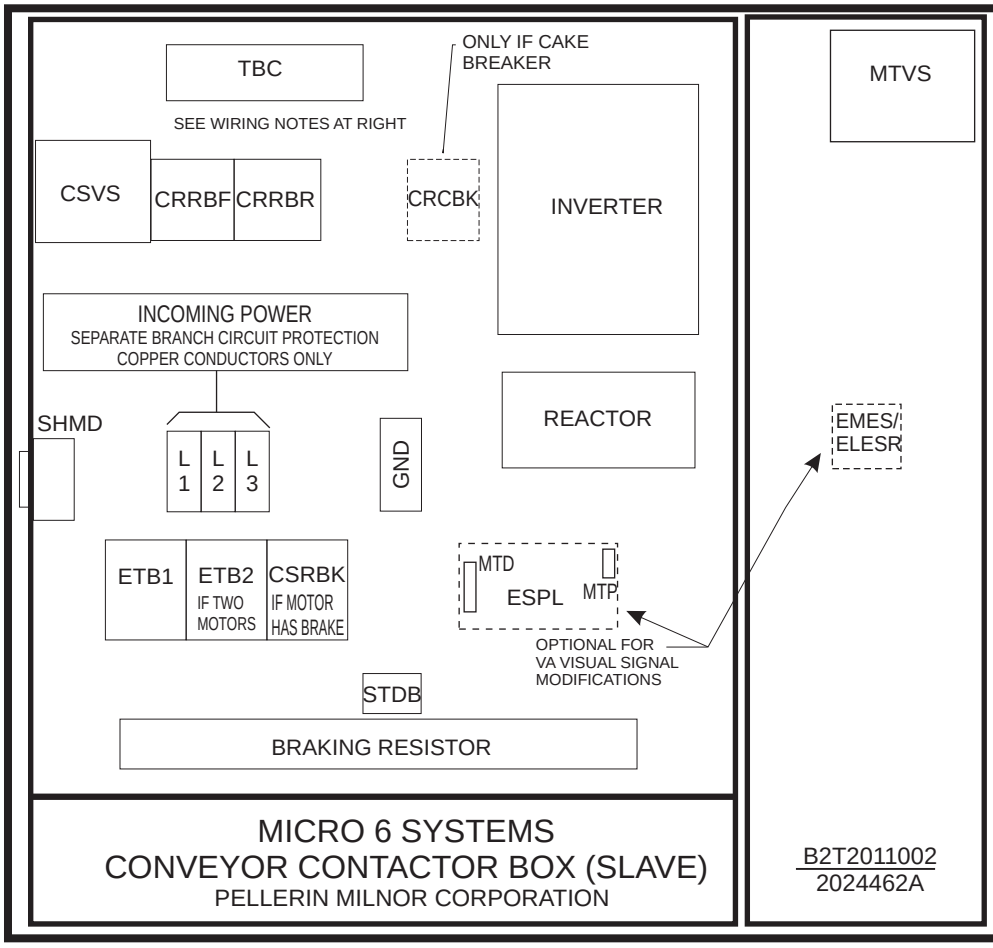

MICRO 6 SYSTEMS
CONVEYOR CONTACTOR BOX (SLAVE)
PELLERIN MILNOR CORPORATION

B2T2011002
2024462A

FIELD WIRING

TBC TO MULTITRAC

TBC 5 RUN BELT FORWARD
6 (N)] 24VDC SUPPLY
7 (H)]
8 FORWARD PHOTOEYE
9 REVERSE PHOTOEYE
10 RUN BELT REVERSE

ON CONVEYOR WIRING

TBC 1] SAFETY PULL CORDS,
3] & DISCONNECTS
6] P-EYE 24VDC SUPPLY
7]
8 FORWARD P-EYE SIGNAL
9 REVERSE P-EYE SIGNAL

INTERFACE TO OTHER BELTS

TBC 1 FROM PREVIOUS SLAVE/ MASTER 3B SAFETIES TO 3A ON MASTER OR TO TBC 1 SAFETIES ON NEXT SLAVE
S+4 POST START SWITCH ON MASTER FOR BRAKE RELEASE

W6UT4TG3
2024462B

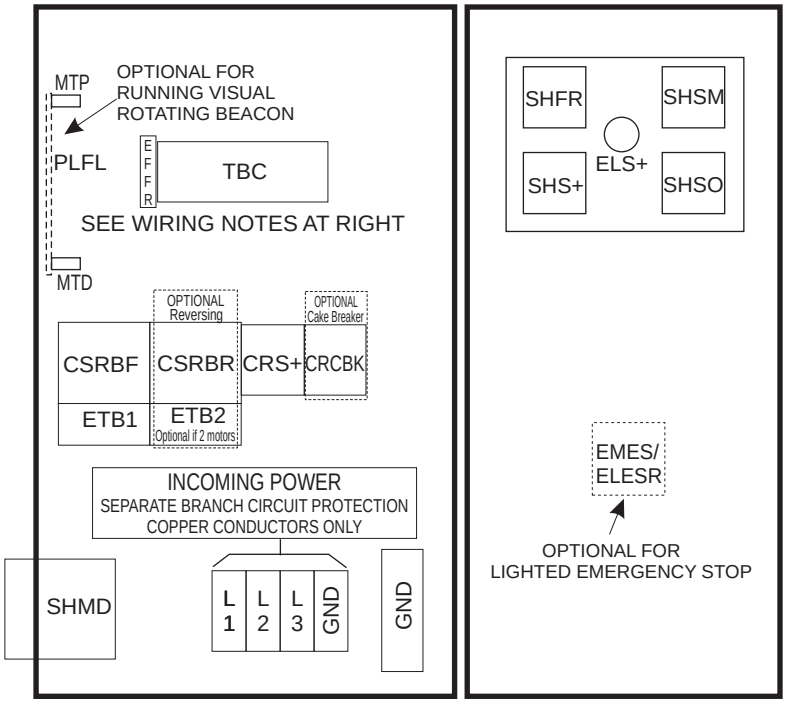

MICRO 6 SYSTEMS
MASTER CONTACTOR BOX
PELLERIN MILNOR CORPORATION

B2T2009011
2024462A

FIELD WIRING

TBC TO MULTITRAC

TBC 0 (H) ┐ FUSE
4 (N) ┘ 120VAC SUPPLY
5 RUN BELT FORWARD
6 (N) ┐ 24VDC SUPPLY
7 (H) ┘
8 FORWARD PHOTOEYE
9 REVERSE PHOTOEYE
10 RUN BELT REVERSE
11 3-WIRE INPUT
12 MANUAL CONTROL INPUT
13 BELT LOAD ALLOWED
14 BELT DISCH. ALLOWED
15 TO MULTITRAC TB_1

ON CONVEYOR WIRING

TBC 1 ┐ SAFETY PULL CORDS,
3 ┘ & DISCONNECTS
6 ┐ P-EYE 24VDC SUPPLY
7 ┘
8 FORWARD P-EYE SIGNAL
9 REVERSE P-EYE SIGNAL

INTERFACE TO OPTIONAL BELTS

TBC 3A SAFETIES FROM TBC3B
ON LAST BELT
3B SAFETIES TO FIRST
SLAVE BELT TBC1

W6UT4TG3
2024462B

W6UT4TG3

MICRO 6 SYSTEMS
CONTROL BOX LAYOUTS
PELLERIN MILNOR CORPORATION

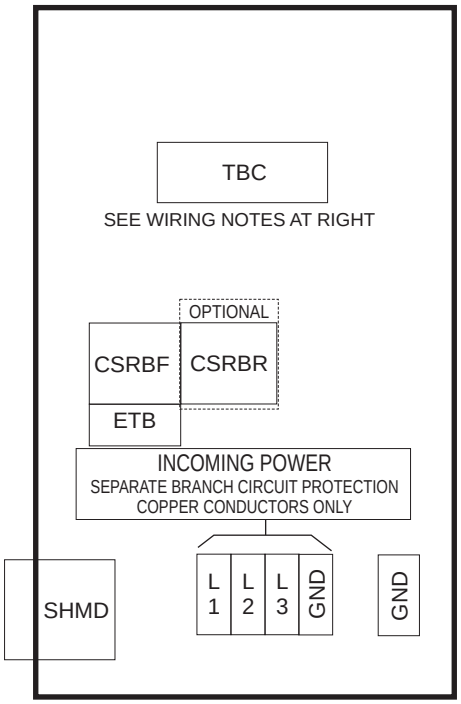

MICRO 6 SYSTEMS
SLAVE CONTACTOR BOX
PELLERIN MILNOR CORPORATION

B2T2009010
2024462A

FIELD WIRING

TBC TO MULTITRAC

TBC 5 RUN BELT FORWARD
6 (N) ┐ 24VDC SUPPLY
7 (H) ┘
8 FORWARD PHOTOEYE
9 REVERSE PHOTOEYE
10 RUN BELT REVERSE

ON CONVEYOR WIRING

TBC 1 ┐ SAFETY PULL CORDS,
3 ┘ & DISCONNECTS
6 ┐ P-EYE 24VDC SUPPLY
7 ┘
8 FORWARD P-EYE SIGNAL
9 REVERSE P-EYE SIGNAL

INTERFACE TO OTHER BELTS

TBC 1 FROM PREVIOUS SLAVE/MASTER
3B SAFETIES TO 3A ON MASTER
OR TO TBC 1 SAFETIES ON
NEXT SLAVE

W6UT4TG3
2024462B

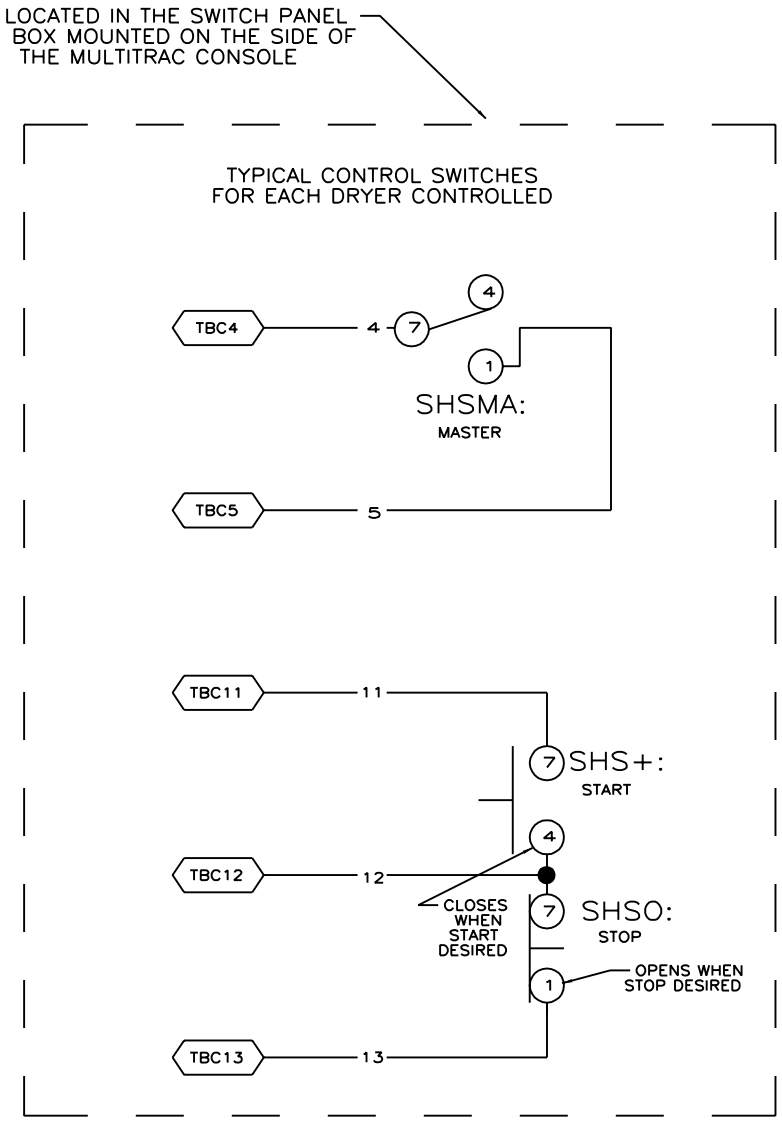

00 01 02 03 04 05 06 07 08 09 10

W6UT4MD
2004364B

WIRE NO.	VOLTAGE	WIRE COLOR
V1	+5VDC	BLUE
V2	+12VDC	BLUE/ORANGE
V3	−12VDC	BLUE/BLACK
2G	GROUND	BLUE/WHITE
SRH	SERIAL HIGH	BLUE/RED
SRL	SERIAL LOW	BLUE/BLACK
INPUTS	—	BLUE/BLACK
—	24VAC	BLUE/RED
—	120VAC	RED
2F	CONTROL GROUND	RED/WHITE

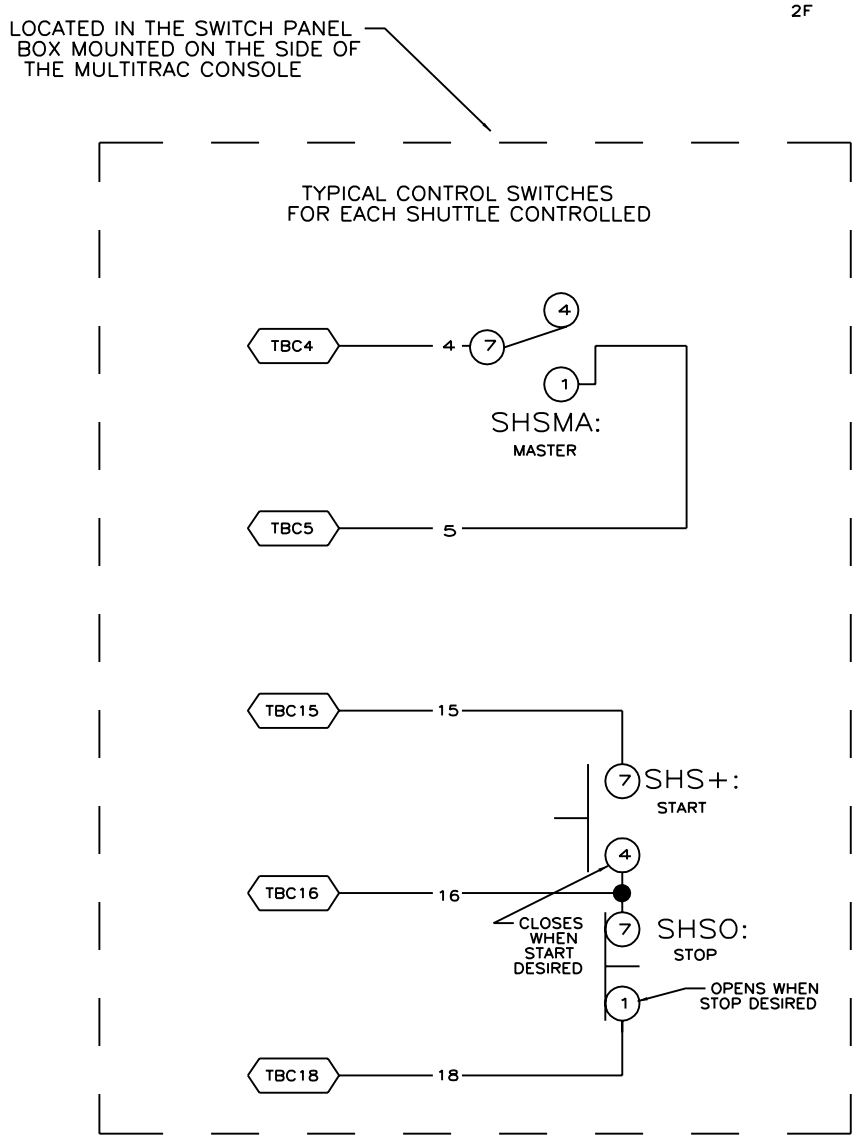

W6UT4MD

SCHEMATIC: MULTI–TRAC DRYNET CONTROLS

PELLERIN MILNOR CORPORATION

NOTES:

1. TBC IS LOCATED IN THE SWITCH PANEL BOX MOUNTED ON THE SIDE OF THE MULTITRAC CONTROLLER.

11 12 13 14 15 16 17 18 19

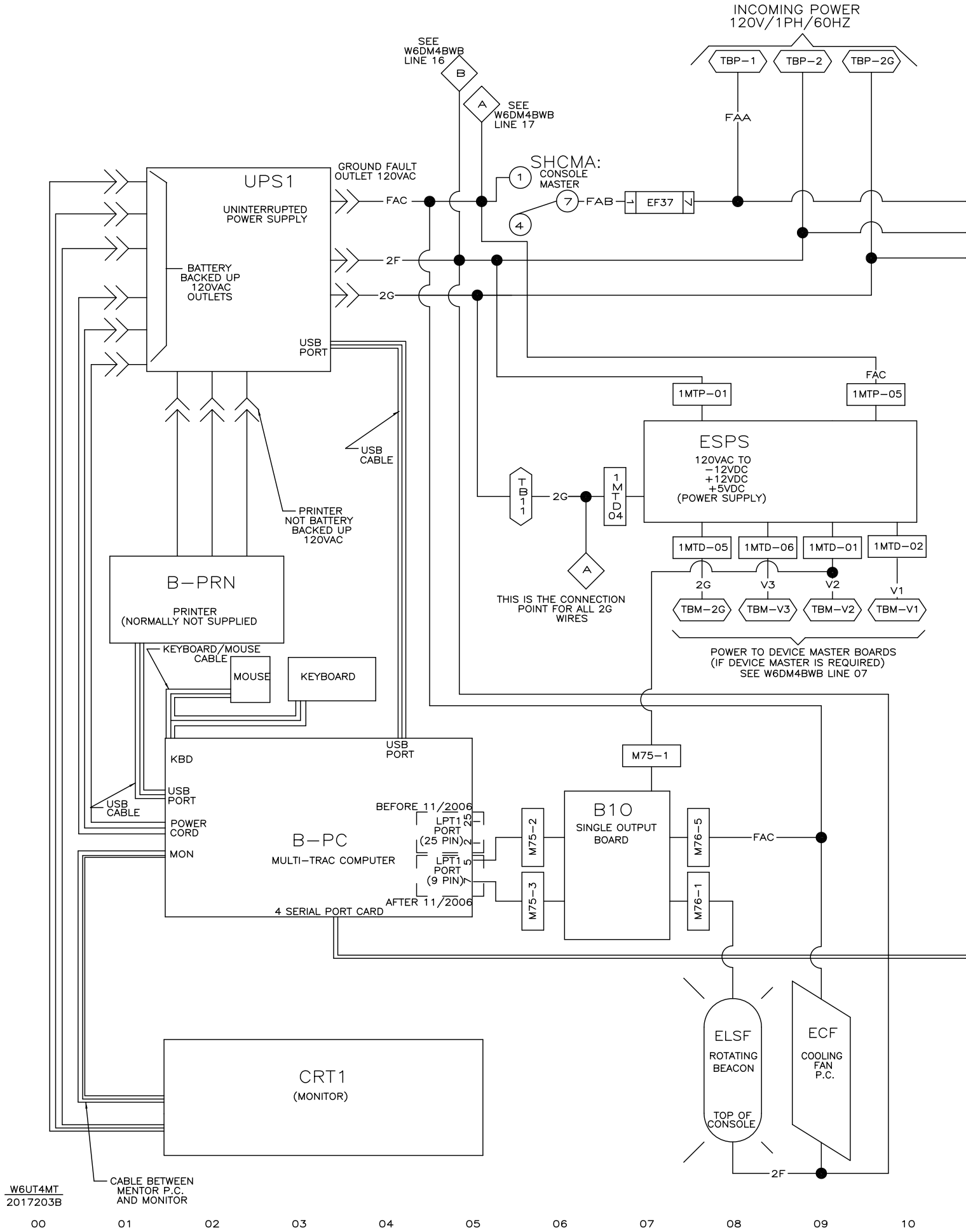
INCOMING POWER
120V/1PH/60HZ
TBP-1
TBP-2
TBP-2G
FAA
SEE
W6DM4BWB
LINE 16
B
A
SEE
W6DM4BWB
LINE 17
SHCMA:
CONSOLE
MASTER
1
7
4
FAB
EF37
UPS1
UNINTERRUPTED
POWER SUPPLY
GROUND FAULT
OUTLET 120VAC
FAC
2F
2G
BATTERY
BACKED UP
120VAC
OUTLETS
USB
PORT
USB
CABLE
PRINTER
NOT BATTERY
BACKED UP
120VAC
FAC
1MTP-01
1MTP-05
ESPS
120VAC TO
-12VDC
+12VDC
+5VDC
(POWER SUPPLY)
TB11
2G
1MTD04
A
THIS IS THE CONNECTION
POINT FOR ALL 2G
WIRES
1MTD-05
1MTD-06
1MTD-01
1MTD-02
2G
V3
V2
V1
TBM-2G
TBM-V3
TBM-V2
TBM-V1
POWER TO DEVICE MASTER BOARDS
(IF DEVICE MASTER IS REQUIRED)
SEE W6DM4BWB LINE 07
B-PRN
PRINTER
(NORMALLY NOT SUPPLIED
KEYBOARD/MOUSE
CABLE
MOUSE
KEYBOARD
USB
PORT
KBD
USB
PORT
USB
CABLE
POWER
CORD
MON
B-PC
MULTI-TRAC COMPUTER
BEFORE 11/2006
LPT1
PORT
(25 PIN)
25
2
LPT1
PORT
(9 PIN)
5
1
AFTER 11/2006
4 SERIAL PORT CARD
M75-1
M75-2
M75-3
B10
SINGLE OUTPUT
BOARD
M76-5
M76-1
FAC
ELSF
ROTATING
BEACON
TOP OF
CONSOLE
ECF
COOLING
FAN
P.C.
2F
CRT1
(MONITOR)
CABLE BETWEEN
MENTOR P.C.
AND MONITOR
W6UT4MT
2017203B
00
01
02
03
04
05
06
07
08
09
10

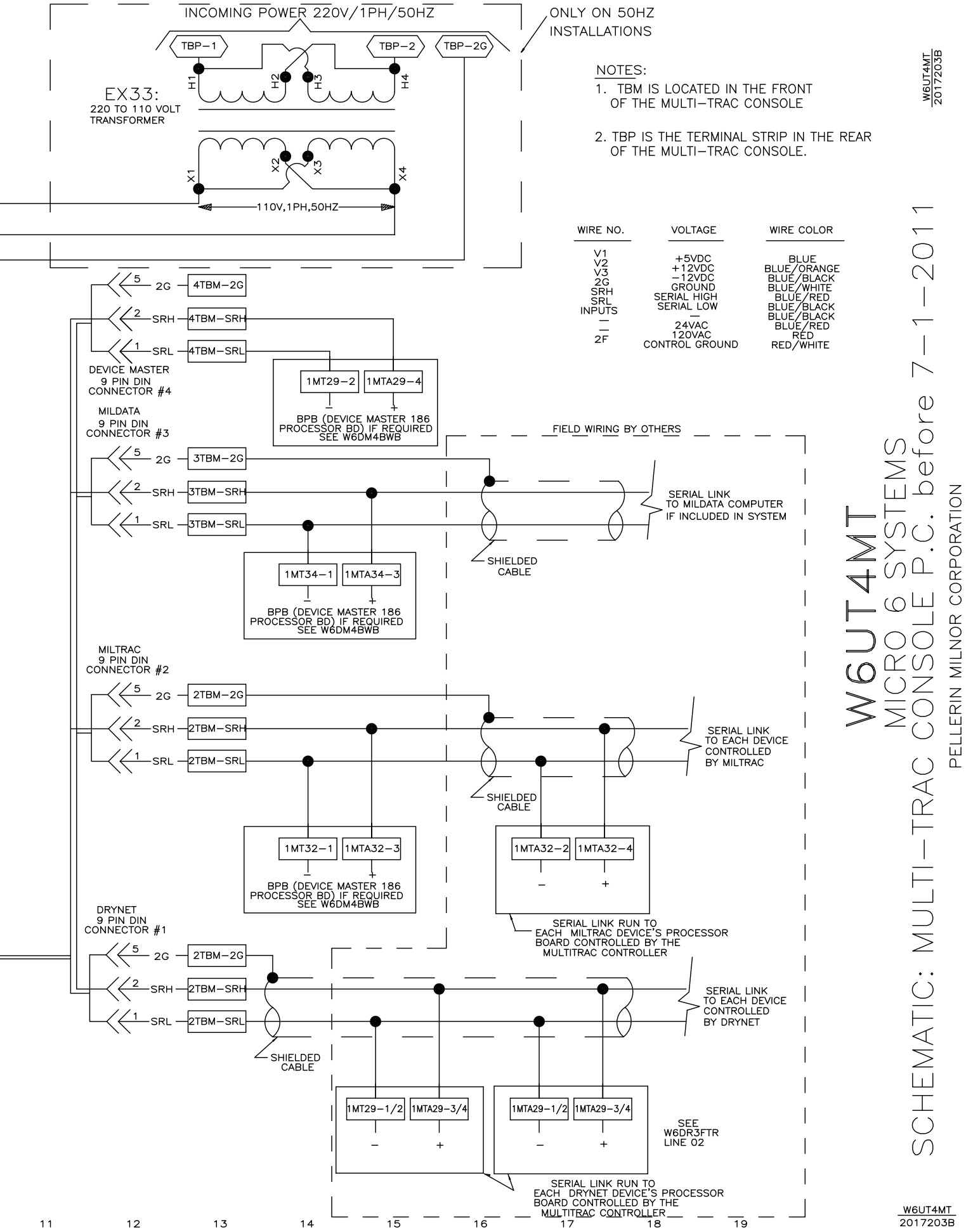
INCOMING POWER 220V/1PH/50HZ
TBP-1
TBP-2
TBP-2G
ONLY ON 50HZ INSTALLATIONS
EX33:
220 TO 110 VOLT TRANSFORMER
H1
H2
H3
H4
X1
X2
X3
X4
110V,1PH,50HZ
NOTES:
1. TBM IS LOCATED IN THE FRONT OF THE MULTI-TRAC CONSOLE
2. TBP IS THE TERMINAL STRIP IN THE REAR OF THE MULTI-TRAC CONSOLE.
W6UT4MT
2017203B
WIRE NO. | VOLTAGE | WIRE COLOR
V1 | +5VDC | BLUE
V2 | +12VDC | BLUE/ORANGE
V3 | -12VDC | BLUE/BLACK
2G | GROUND | BLUE/WHITE
SRH | SERIAL HIGH | BLUE/RED
SRL | SERIAL LOW | BLUE/BLACK
INPUTS | — | BLUE/BLACK
— | 24VAC | BLUE/RED
— | 120VAC | RED
2F | CONTROL GROUND | RED/WHITE
DEVICE MASTER 9 PIN DIN CONNECTOR #4
4TBM-2G
4TBM-SRH
4TBM-SRL
1MT29-2
1MTA29-4
BPB (DEVICE MASTER 186 PROCESSOR BD) IF REQUIRED SEE W6DM4BWB
MILDATA 9 PIN DIN CONNECTOR #3
3TBM-2G
3TBM-SRH
3TBM-SRL
FIELD WIRING BY OTHERS
SERIAL LINK TO MILDATA COMPUTER IF INCLUDED IN SYSTEM
SHIELDED CABLE
1MT34-1
1MTA34-3
BPB (DEVICE MASTER 186 PROCESSOR BD) IF REQUIRED SEE W6DM4BWB
MILTRAC 9 PIN DIN CONNECTOR #2
2TBM-2G
2TBM-SRH
2TBM-SRL
SERIAL LINK TO EACH DEVICE CONTROLLED BY MILTRAC
SHIELDED CABLE
1MT32-1
1MTA32-3
BPB (DEVICE MASTER 186 PROCESSOR BD) IF REQUIRED SEE W6DM4BWB
1MTA32-2
1MTA32-4
SERIAL LINK RUN TO EACH MILTRAC DEVICE'S PROCESSOR BOARD CONTROLLED BY THE MULTITRAC CONTROLLER
DRYNET 9 PIN DIN CONNECTOR #1
2TBM-2G
2TBM-SRH
2TBM-SRL
SERIAL LINK TO EACH DEVICE CONTROLLED BY DRYNET
SHIELDED CABLE
1MT29-1/2
1MTA29-3/4
1MTA29-1/2
1MTA29-3/4
SEE W6DR3FTR LINE 02
SERIAL LINK RUN TO EACH DRYNET DEVICE'S PROCESSOR BOARD CONTROLLED BY THE MULTITRAC CONTROLLER
11
12
13
14
15
16
17
18
19
W6UT4MT
MICRO 6 SYSTEMS
SCHEMATIC: MULTI-TRAC CONSOLE P.C. before 7-1-2011
PELLERIN MILNOR CORPORATION
W6UT4MT
2017203B

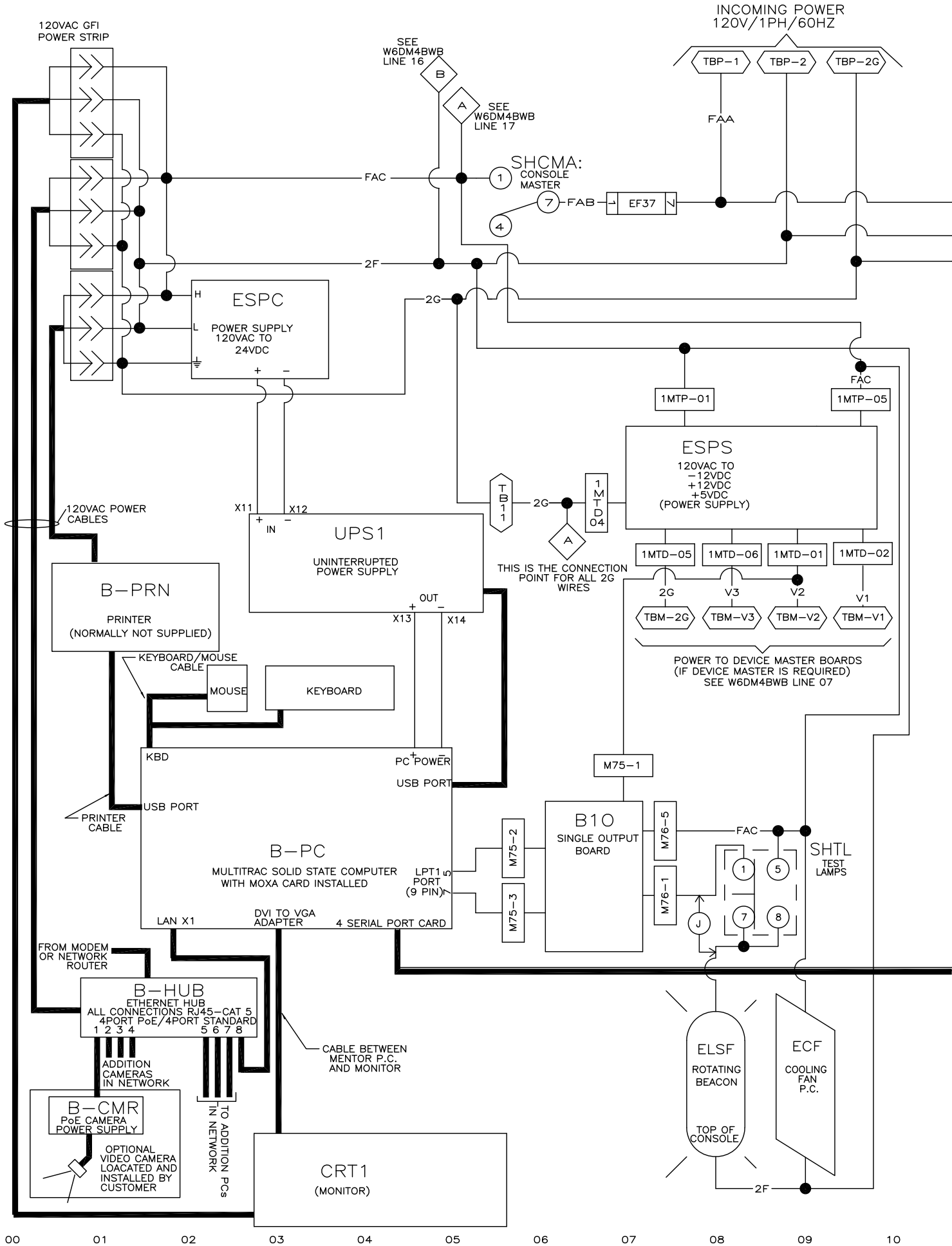
120VAC GFI POWER STRIP
SEE W6DM4BWB LINE 16
SEE W6DM4BWB LINE 17
INCOMING POWER 120V/1PH/60HZ
TBP-1
TBP-2
TBP-2G
FAA
FAC
SHCMA: CONSOLE MASTER
FAB
EF37
2F
2G
ESPC
POWER SUPPLY 120VAC TO 24VDC
1MTP-01
1MTP-05
ESPS
120VAC TO -12VDC +12VDC +5VDC (POWER SUPPLY)
TB11
1MTD04
THIS IS THE CONNECTION POINT FOR ALL 2G WIRES
1MTD-05
1MTD-06
1MTD-01
1MTD-02
TBM-2G
TBM-V3
TBM-V2
TBM-V1
POWER TO DEVICE MASTER BOARDS (IF DEVICE MASTER IS REQUIRED) SEE W6DM4BWB LINE 07
120VAC POWER CABLES
X11
X12
UPS1
UNINTERRUPTED POWER SUPPLY
X13
X14
B-PRN
PRINTER (NORMALLY NOT SUPPLIED)
KEYBOARD/MOUSE CABLE
MOUSE
KEYBOARD
KBD
PC POWER
USB PORT
PRINTER CABLE
B-PC
MULTITRAC SOLID STATE COMPUTER WITH MOXA CARD INSTALLED
LPT1 PORT (9 PIN)
LAN X1
DVI TO VGA ADAPTER
4 SERIAL PORT CARD
M75-1
M75-2
M75-3
B10
SINGLE OUTPUT BOARD
M76-5
M76-1
SHTL
TEST LAMPS
FROM MODEM OR NETWORK ROUTER
B-HUB
ETHERNET HUB
ALL CONNECTIONS RJ45-CAT 5
4PORT PoE/4PORT STANDARD
1 2 3 4
5 6 7 8
ADDITION CAMERAS IN NETWORK
B-CMR
PoE CAMERA POWER SUPPLY
OPTIONAL VIDEO CAMERA LOACATED AND INSTALLED BY CUSTOMER
TO ADDITION PCs IN NETWORK
CABLE BETWEEN MENTOR P.C. AND MONITOR
CRT1
(MONITOR)
ELSF
ROTATING BEACON
TOP OF CONSOLE
ECF
COOLING FAN P.C.
00
01
02
03
04
05
06
07
08
09
10
W6UT4MTA
2019273B

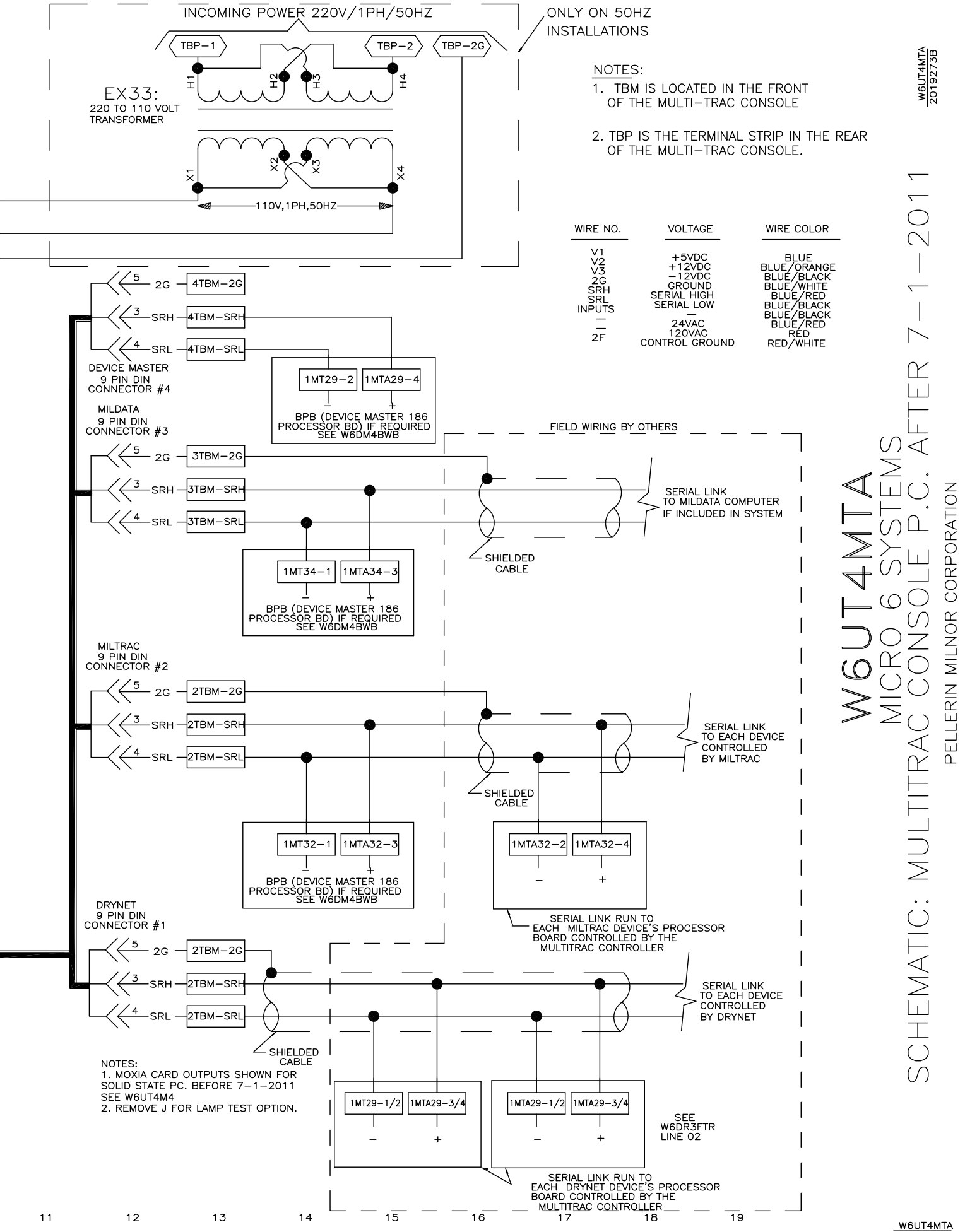
INCOMING POWER 220V/1PH/50HZ
TBP-1
TBP-2
TBP-2G
ONLY ON 50HZ INSTALLATIONS
EX33:
220 TO 110 VOLT TRANSFORMER
H1
H2
H3
H4
X1
X2
X3
X4
110V,1PH,50HZ
NOTES:
1. TBM IS LOCATED IN THE FRONT OF THE MULTI-TRAC CONSOLE
2. TBP IS THE TERMINAL STRIP IN THE REAR OF THE MULTI-TRAC CONSOLE.
W6UT4MTA
2019273B
WIRE NO. | VOLTAGE | WIRE COLOR
V1 | +5VDC | BLUE
V2 | +12VDC | BLUE/ORANGE
V3 | -12VDC | BLUE/BLACK
2G | GROUND | BLUE/WHITE
SRH | SERIAL HIGH | BLUE/RED
SRL | SERIAL LOW | BLUE/BLACK
INPUTS | — | BLUE/BLACK
— | 24VAC | BLUE/RED
— | 120VAC | RED
2F | CONTROL GROUND | RED/WHITE
2G
SRH
SRL
4TBM-2G
4TBM-SRH
4TBM-SRL
DEVICE MASTER 9 PIN DIN CONNECTOR #4
1MT29-2
1MTA29-4
BPB (DEVICE MASTER 186 PROCESSOR BD) IF REQUIRED SEE W6DM4BWB
MILDATA 9 PIN DIN CONNECTOR #3
FIELD WIRING BY OTHERS
3TBM-2G
3TBM-SRH
3TBM-SRL
SERIAL LINK TO MILDATA COMPUTER IF INCLUDED IN SYSTEM
SHIELDED CABLE
1MT34-1
1MTA34-3
BPB (DEVICE MASTER 186 PROCESSOR BD) IF REQUIRED SEE W6DM4BWB
MILTRAC 9 PIN DIN CONNECTOR #2
2TBM-2G
2TBM-SRH
2TBM-SRL
SERIAL LINK TO EACH DEVICE CONTROLLED BY MILTRAC
SHIELDED CABLE
1MT32-1
1MTA32-3
BPB (DEVICE MASTER 186 PROCESSOR BD) IF REQUIRED SEE W6DM4BWB
1MTA32-2
1MTA32-4
SERIAL LINK RUN TO EACH MILTRAC DEVICE'S PROCESSOR BOARD CONTROLLED BY THE MULTITRAC CONTROLLER
DRYNET 9 PIN DIN CONNECTOR #1
2TBM-2G
2TBM-SRH
2TBM-SRL
SERIAL LINK TO EACH DEVICE CONTROLLED BY DRYNET
SHIELDED CABLE
NOTES:
1. MOXIA CARD OUTPUTS SHOWN FOR SOLID STATE PC. BEFORE 7-1-2011 SEE W6UT4M4
2. REMOVE J FOR LAMP TEST OPTION.
1MT29-1/2
1MTA29-3/4
1MTA29-1/2
1MTA29-3/4
SEE W6DR3FTR LINE 02
SERIAL LINK RUN TO EACH DRYNET DEVICE'S PROCESSOR BOARD CONTROLLED BY THE MULTITRAC CONTROLLER
11
12
13
14
15
16
17
18
19
W6UT4MTA
MICRO 6 SYSTEMS
SCHEMATIC: MULTITRAC CONSOLE P.C. AFTER 7-1-2011
PELLERIN MILNOR CORPORATION
W6UT4MTA
2019273B

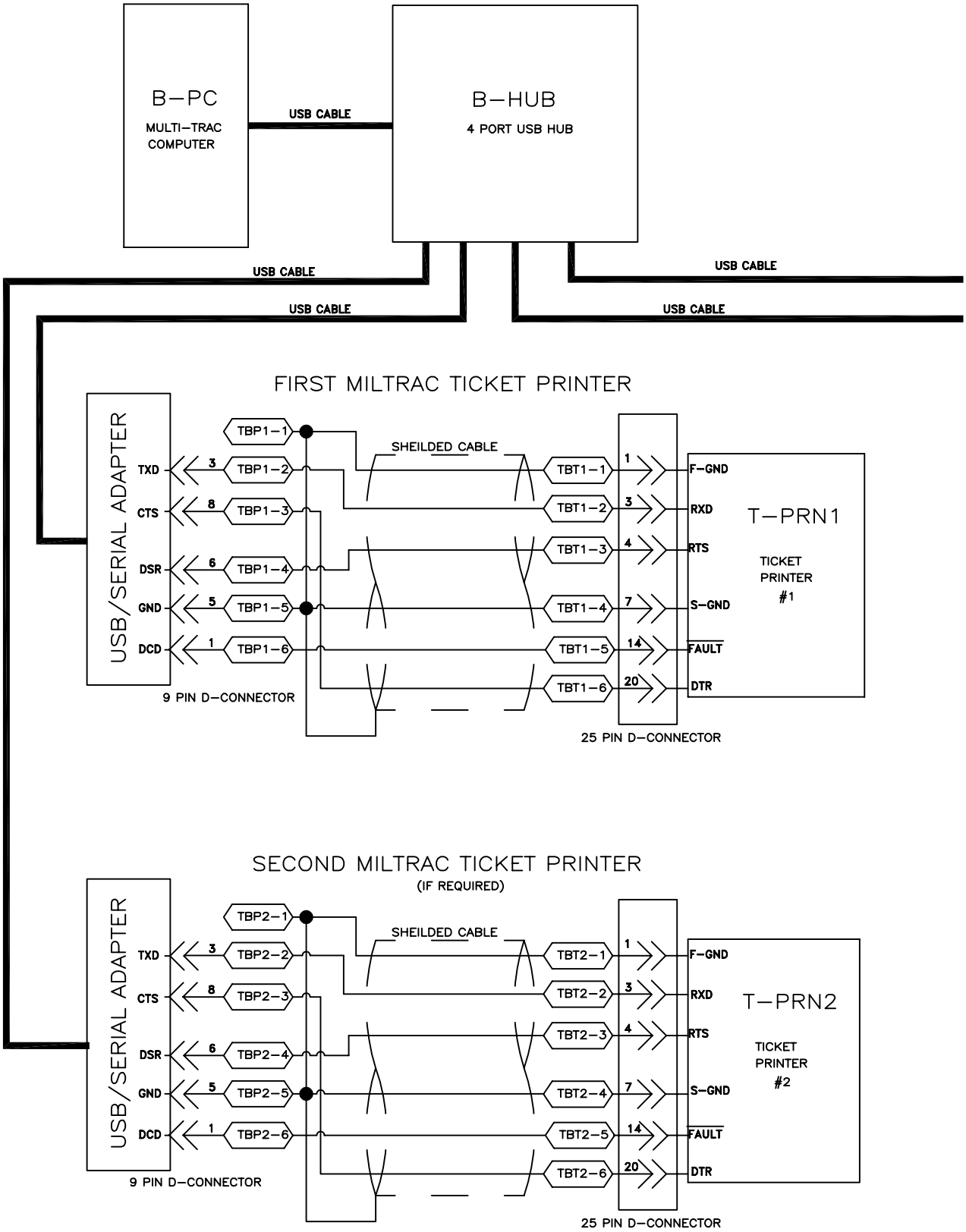

W6UT4TP
2007155B

00 01 02 03 04 05 06 07 08 09 10

NOTES:

1. TBP1, 2, 3. & 4 ARE LOCATED IN THE TOP OF THE MULTI–TRAC CONSOLE
2. TBT1,2,3, & 4 ARE LOCATED IN JUNCTION BOX ON EACH TICKET PRINTER STAND.
3. THIS DRAWING REPLACES W6UT4TP ON MULTITRACS MANUFACTURED AFTER 4–15–2007.

DIP SWITCH SETTINGS ON STAR SP200 PRINTER

1	2	3	4	5	6	7	8	9	10
ON	ON	ON	ON	ON	ON	ON	ON	OFF	OFF

W6UT4TP
2007155B

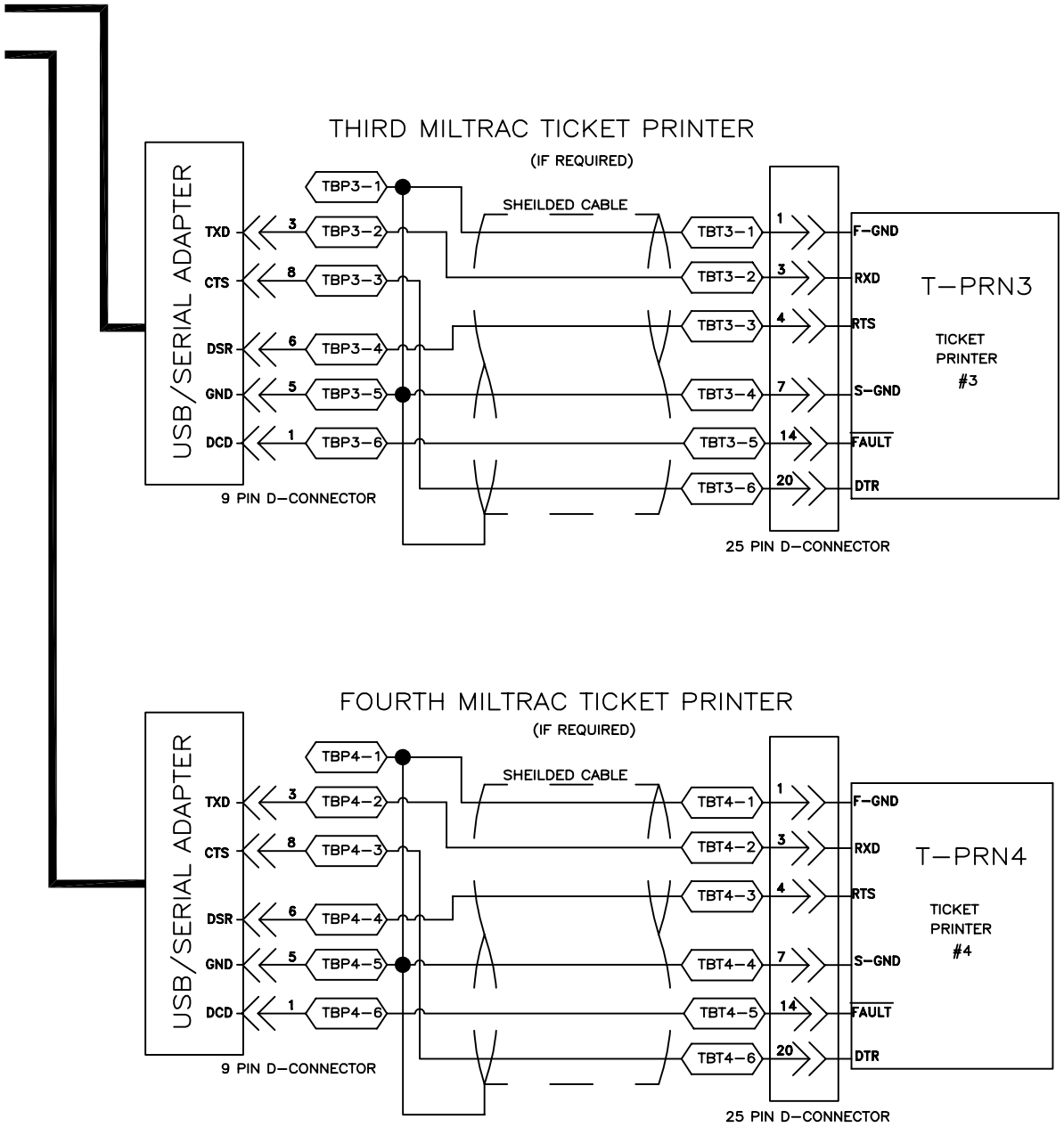

W6UT5TP

MICRO 6 SYSTEMS

SCHEMATIC: MILTRAC TICKET PRINTER INTERFACE WITH MULTITRAC P.C.

PELLERIN MILNOR CORPORATION

11 12 13 14 15 16 17 18 19

W6UT4TP
2007155B

Device Master Option

2

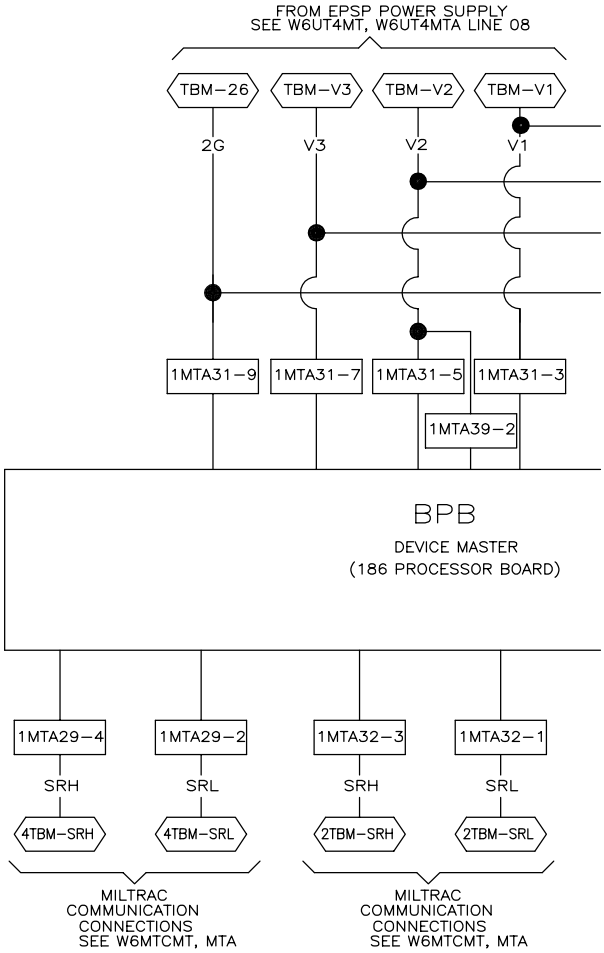

01 02 03 04 05 06 07 08 09 10

W6DM4BWB
2012235B

NOTES:

1. TBP IS THE TERMINAL STRIP IN THE REAR OF THE DEVICE MASTER CONSOLE.

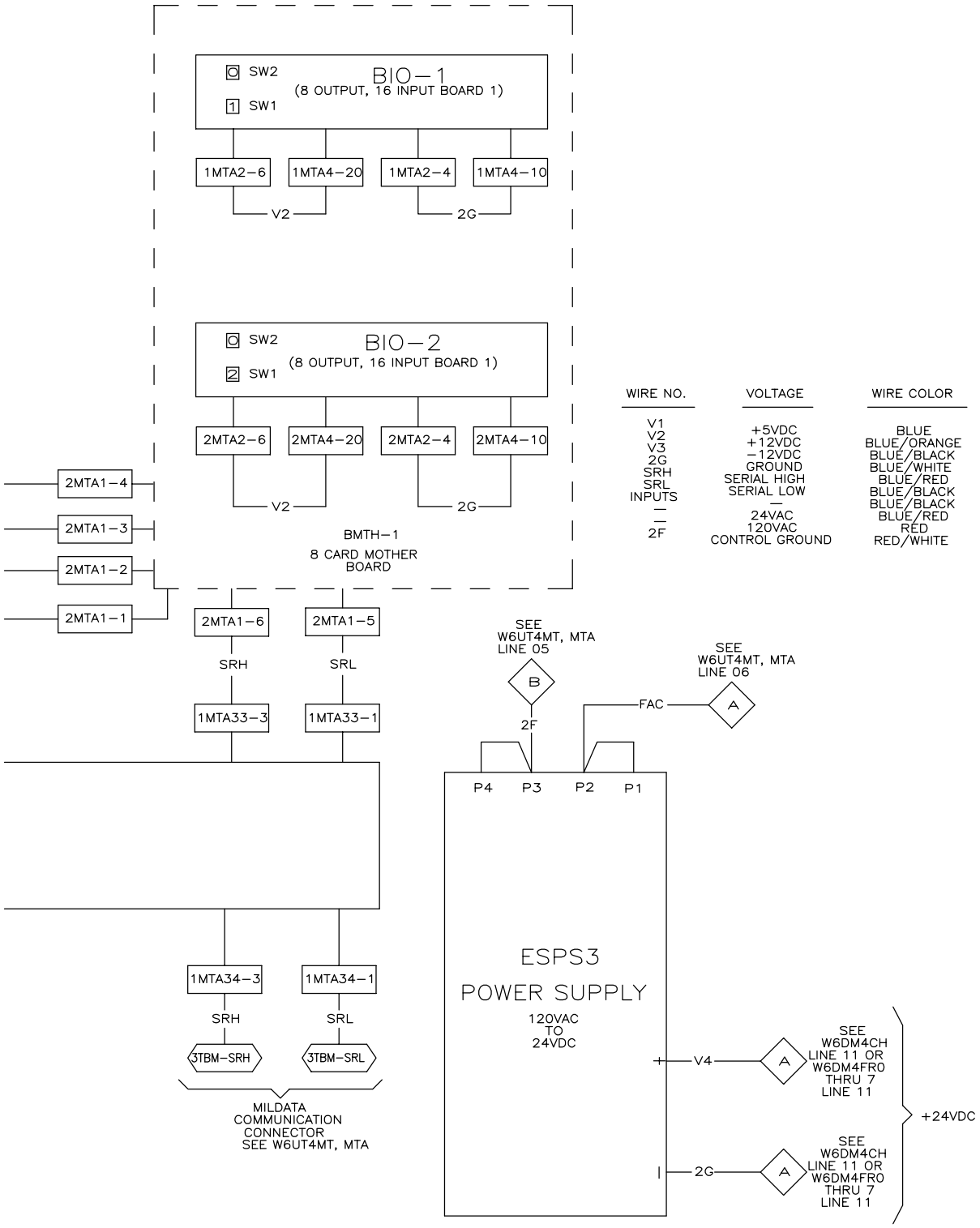

WIRE NO.	VOLTAGE	WIRE COLOR
V1	+5VDC	BLUE
V2	+12VDC	BLUE/ORANGE
V3	−12VDC	BLUE/BLACK
2G	GROUND	BLUE/WHITE
SRH	SERIAL HIGH	BLUE/RED
SRL	SERIAL LOW	BLUE/BLACK
INPUTS	—	BLUE/BLACK
—	—	BLUE/RED
—	24VAC	RED
2F	120VAC	RED/WHITE
	CONTROL GROUND	

W6DM4BWB
MICRO 6 SYSTEMS
SCHEMATIC: P.C DEVICE MASTER CONSOLE

PELLERIN MILNOR CORPORATION

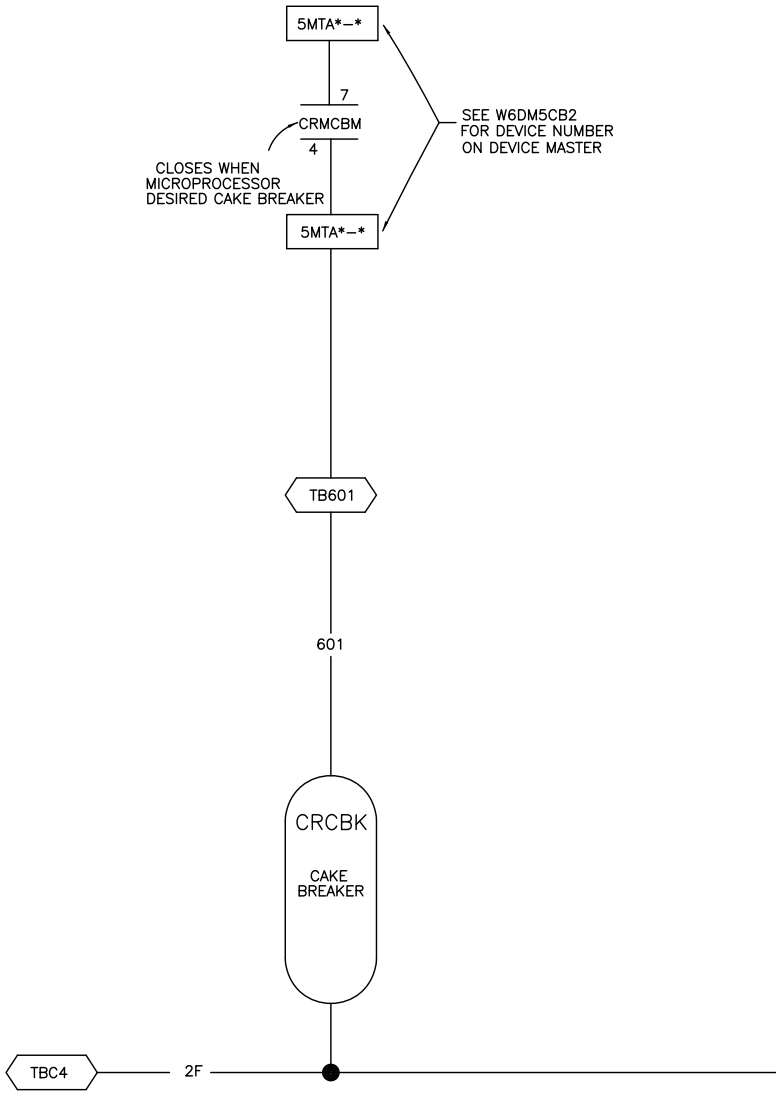

00 01 02 03 04 05 06 07 08 09

W6DM5CB1
2018462B

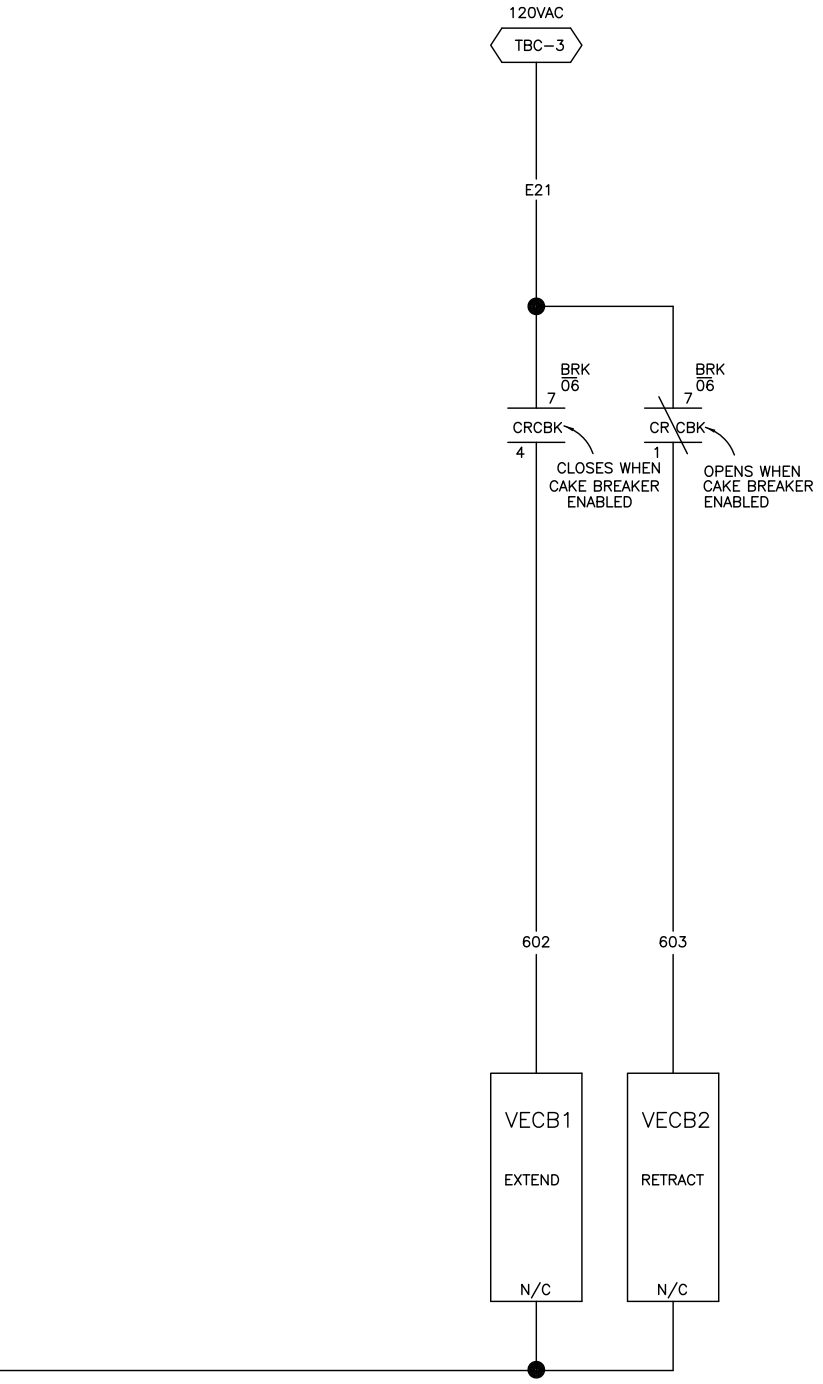

W6DM5CB1

CAKE BREAKER

SCHEMATIC: CAKE BREAKER INTERFACE

PELLERIN MILNOR CORPORATION

9 10 11 12 13 14 15 16 17 18

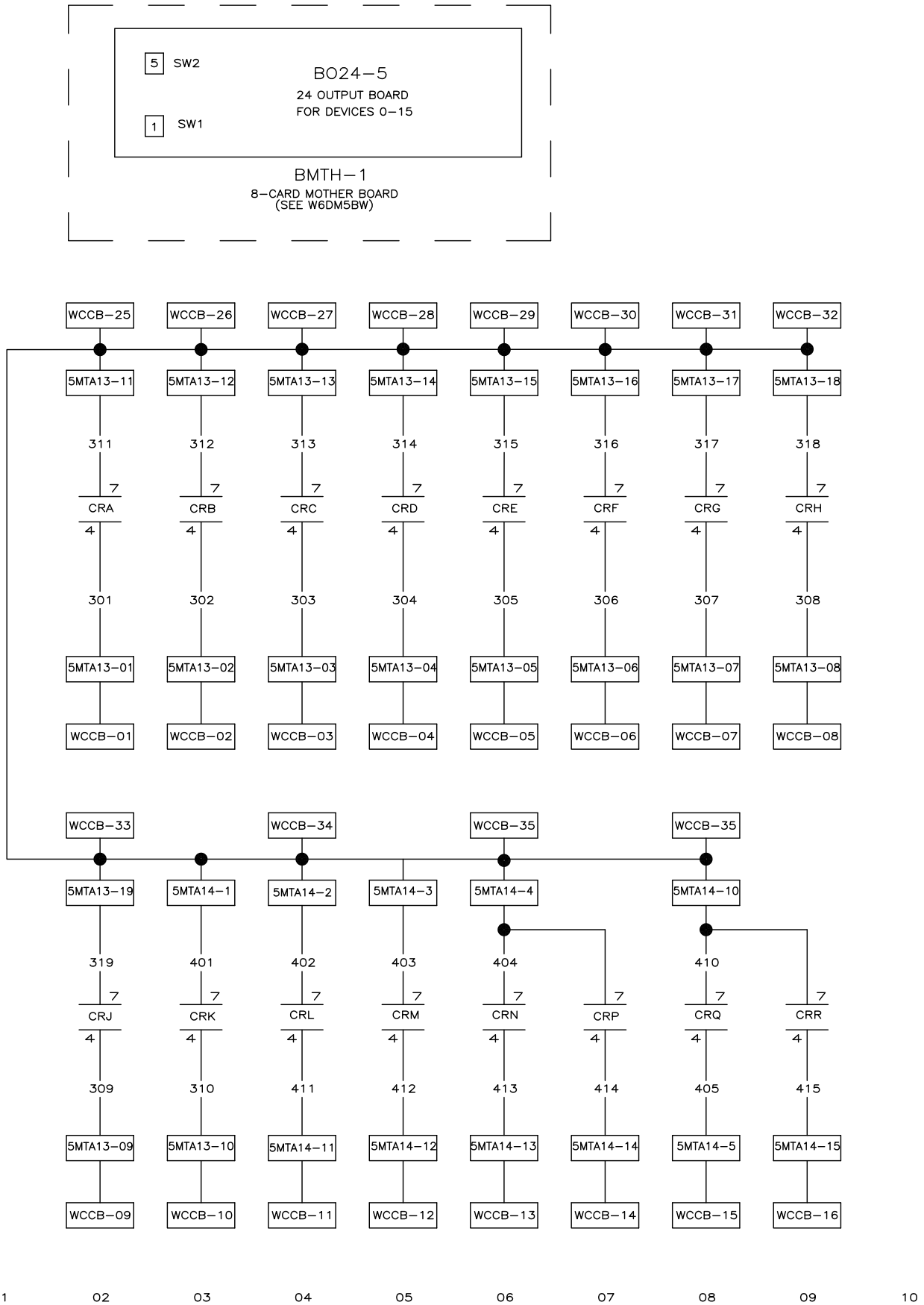

W6DM5CB2
2019033B

OUTPUT TABLE

OUTPUT NUMBER	OUTPUT NAME	OUTPUT FUNCTION
0	CRA	CAKE BREAKER DEVICE 0
1	CRB	CAKE BREAKER DEVICE 1
2	CRC	CAKE BREAKER DEVICE 2
3	CRD	CAKE BREAKER DEVICE 3
4	CRE	CAKE BREAKER DEVICE 4
5	CRF	CAKE BREAKER DEVICE 5
6	CRG	CAKE BREAKER DEVICE 6
7	CRH	CAKE BREAKER DEVICE 7
8	CRJ	CAKE BREAKER DEVICE 8
9	CRK	CAKE BREAKER DEVICE 9
10	CRL	CAKE BREAKER DEVICE 10
11	CRM	CAKE BREAKER DEVICE 11
12	CRN	CAKE BREAKER DEVICE 12
13	CRP	CAKE BREAKER DEVICE 13
14	CRQ	CAKE BREAKER DEVICE 14
15	CRR	CAKE BREAKER DEVICE 15

W6DM5CB2
MICRO 6 SYSTEMS
SCHEMATIC: DEVICE MASTER CAKE BREAKER OUTPUTS
(24 OUTPUT BOARD)
PELLERIN MILNOR CORPORATION

11 12 13 14 15 16 17

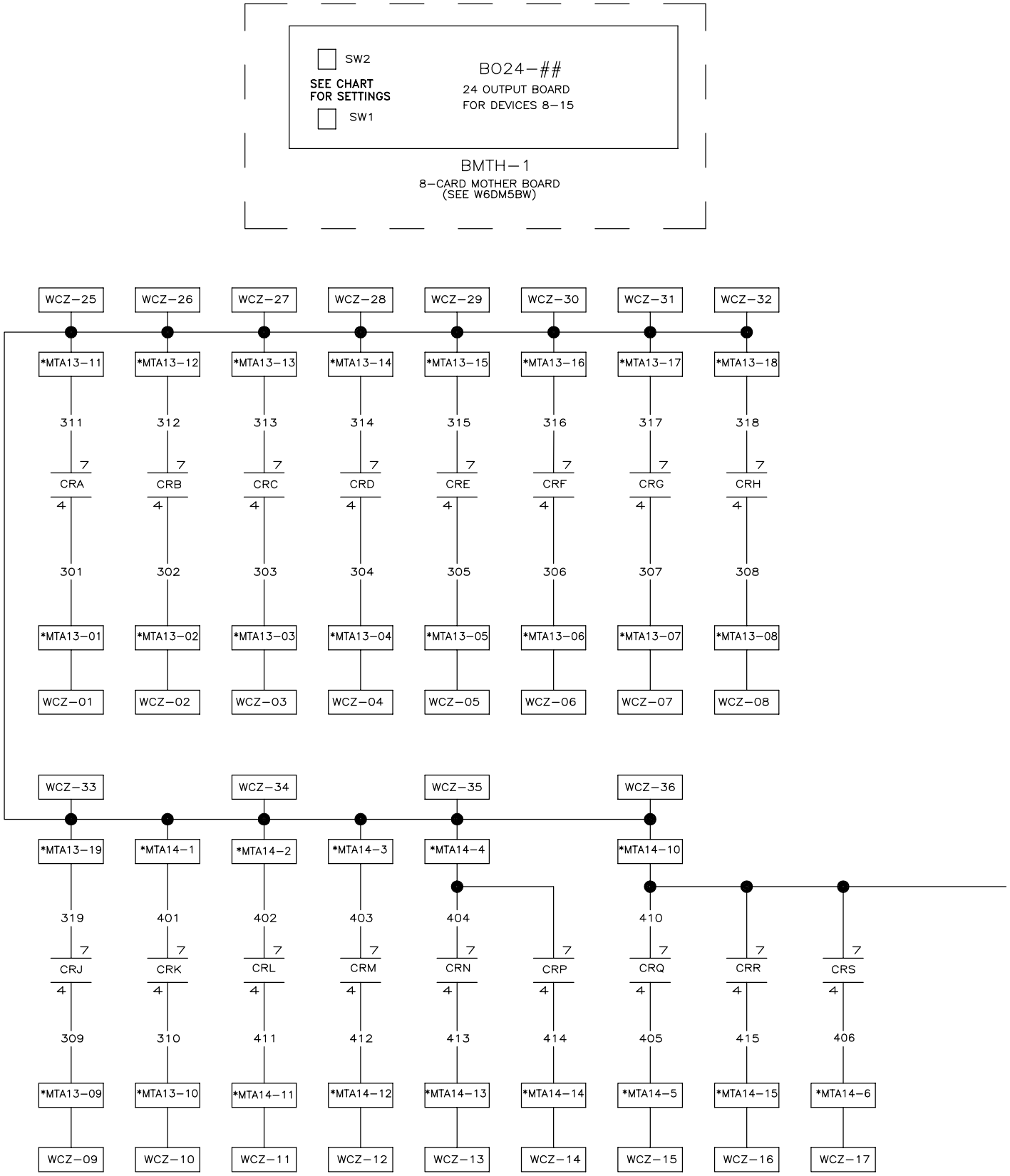

W6DM5DF
2007155B

W6DM5DF
2007155B

W6DM5DF
MICRO 6 SYSTEMS
SCHEMATIC: DEVICE MASTER DEVICE FINISHED DISCHARGING (24 OUTPUT)

PELLERIN MILNOR CORPORATION

DIP SWITCH SETTING CHART

DEVICE NUMBER	BOARD ADDRESS SW2	BOARD ADDRESS SW1
0	1	A
1		
2		
3		
4		
5		
6		
7		
8	9	A
9		
10		
11		
12		
13		
14		
15		

OUTPUT TABLE

		BOARD ADDRESS		BOARD ADDRESS	
		SW2	SW1	SW2	SW1
		1	A	9	A
OUTPUT NUMBER	OUTPUT NAME	OUTPUT FUNCTION		OUTPUT FUNCTION	
0	CRA	FINISHED DISCHARGING DEVICE 0		FINISHED DISCHARGING DEVICE 8	
1	CRB	--		--	
2	CRC	FINISHED DISCHARGING DEVICE 1		FINISHED DISCHARGING DEVICE 9	
3	CRD	--		--	
4	CRE	FINISHED DISCHARGING DEVICE 2		FINISHED DISCHARGING DEVICE 10	
5	CRF	--		--	
6	CRG	FINISHED DISCHARGING DEVICE 3		FINISHED DISCHARGING DEVICE 11	
7	CRH	--		--	
8	CRJ	FINISHED DISCHARGING DEVICE 4		FINISHED DISCHARGING DEVICE 12	
9	CRK	--		--	
10	CRL	FINISHED DISCHARGING DEVICE 5		FINISHED DISCHARGING DEVICE 13	
11	CRM	--		--	

		BOARD ADDRESS		BOARD ADDRESS	
		SW2	SW1	SW2	SW1
		1	A	9	A
OUTPUT NUMBER	OUTPUT NAME	OUTPUT FUNCTION		OUTPUT FUNCTION	
12	CRN	FINISHED DISCHARGING DEVICE 6		FINISHED DISCHARGING DEVICE 14	
13	CRP	--		--	
14	CRQ	FINISHED DISCHARGING DEVICE 7		FINISHED DISCHARGING DEVICE 15	
15	CRR	--		--	
16	CRS	--		--	
17	CRT	--		--	
18	CRU	--		--	
19	CRV	--		--	
20	CRW	--		--	
21	CRX	--		--	
22	CRY	--		--	
23	CRZ	--		--	

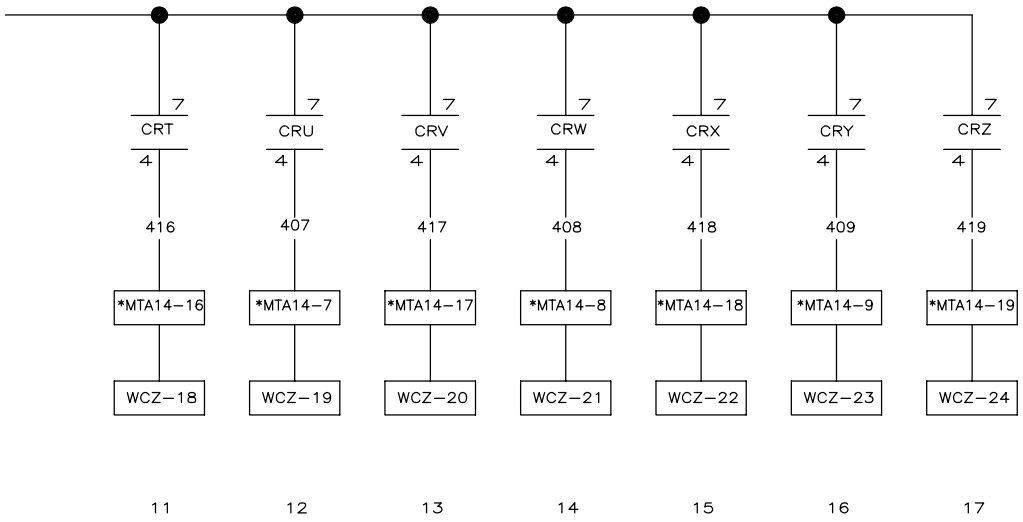

NOTE:
1. THE BOARD WIRING SHOWN IS TYPICAL. REFER TO THE DIP SWITCH CHART FOR CORRECT DIP SWITCH SETTING FOR EACH DEVICE
2. THE ASTERISK (*) IN THE MTA DESIGNATION REPRESENTS THE BOARD ADDRESS AS GIVEN ON THE OUTPUT TABLE
3. REFER TO THE OUTPUT TABLE FOR A FUNCTIONAL DESCRIPTION OF THE OUTPUTS FOR EACH BOARD ADDRESS.

W6DM5DF
2007155B

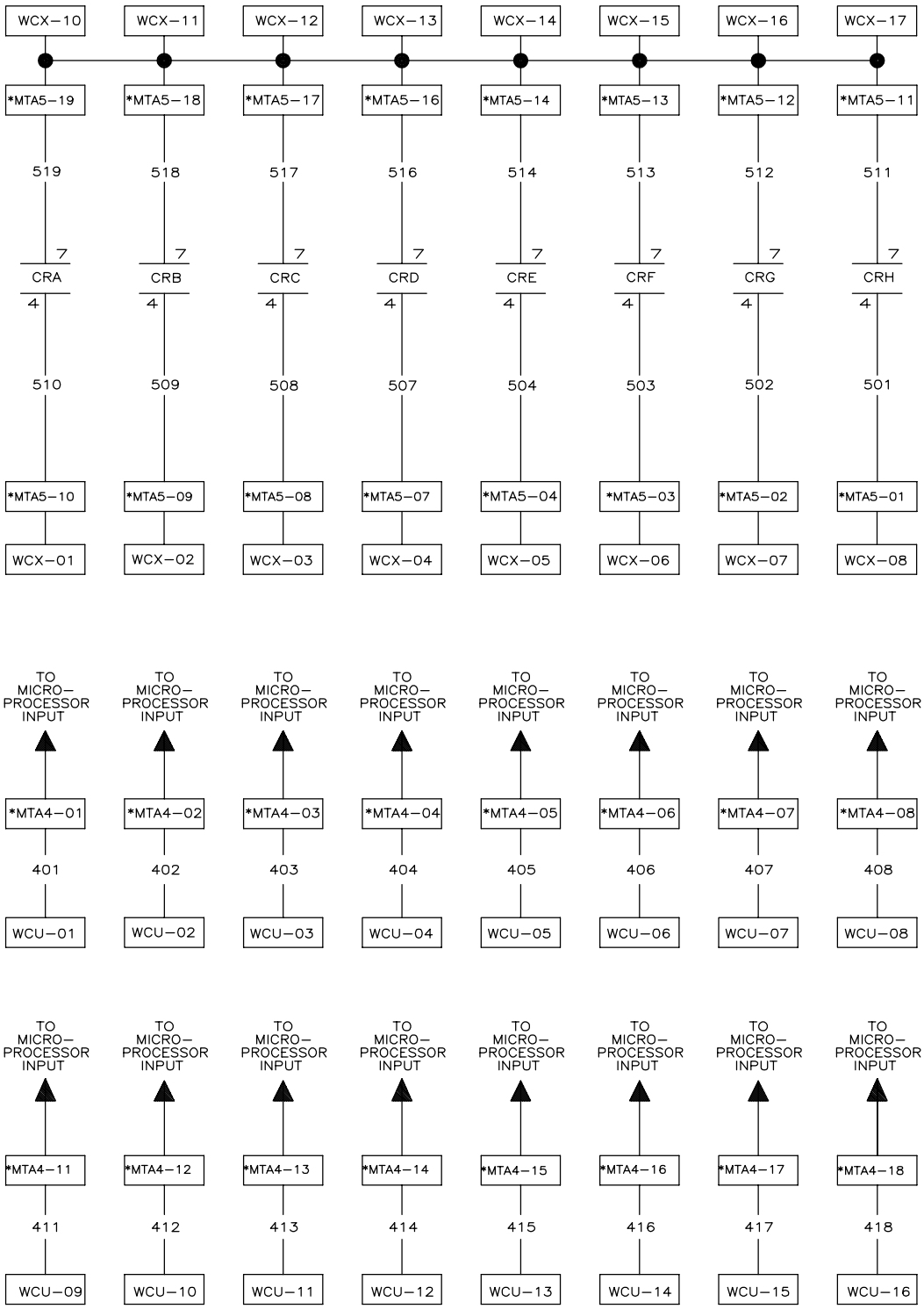

00 01 02 03 04 05 06 07 08 09 10

W6DM5EB
2007155B

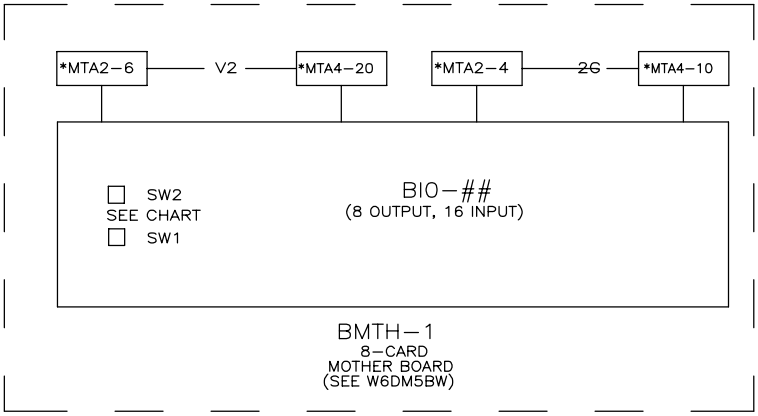

DIP SWITCH SETTING CHART		
DEVICE NUMBER	BOARD ADDRESS	
	SW2	SW1
0	0	0
1		
2		
3		
4		
5		
6		
7		
8	8	0
9		
10		
11		
12		
13		
14		
15		

W6DM5EB
2007155B

INPUT TABLE					
		BOARD ADDRESS		BOARD ADDRESS	
		SW2	SW1	SW2	SW1
		0	0	8	0
INPUT NUMBER	INPUT NAME	INPUT FUNCTION		INPUT FUNCTION	
0	401	BELT 0 FULLY EXTENDED		BELT 8 FULLY EXTENDED	
1	402	BELT 0 FULLY RETRACTED		BELT 8 FULLY RETRACTED	
2	403	BELT 1 FULLY EXTENDED		BELT 9 FULLY EXTENDED	
3	404	BELT 1 FULLY RETRACTED		BELT 9 FULLY RETRACTED	
4	405	BELT 2 FULLY EXTENDED		BELT 10 FULLY EXTENDED	
5	406	BELT 2 FULLY RETRACTED		BELT 10 FULLY RETRACTED	
6	407	BELT 3 FULLY EXTENDED		BELT 11 FULLY EXTENDED	
7	408	BELT 3 FULLY RETRACTED		BELT 11 FULLY RETRACTED	
8	411	BELT 4 FULLY EXTENDED		BELT 12 FULLY EXTENDED	
9	412	BELT 4 FULLY RETRACTED		BELT 12 FULLY RETRACTED	
10	413	BELT 5 FULLY EXTENDED		BELT 13 FULLY EXTENDED	
11	414	BELT 5 FULLY RETRACTED		BELT 13 FULLY RETRACTED	
12	415	BELT 6 FULLY EXTENDED		BELT 14 FULLY EXTENDED	
13	416	BELT 6 FULLY RETRACTED		BELT 14 FULLY RETRACTED	
14	417	BELT 7 FULLY EXTENDED		BELT 15 FULLY EXTENDED	
15	418	BELT 7 FULLY RETRACTED		BELT 15 FULLY RETRACTED	

OUTPUT TABLE					
		BOARD ADDRESS		BOARD ADDRESS	
		SW2	SW1	SW2	SW1
		0	0	8	0
OUTPUT NUMBER	OUTPUT NAME	OUTPUT FUNCTION		OUTPUT FUNCTION	
0	CRA	EXTEND BELT 0		EXTEND BELT 8	
1	CRB	EXTEND BELT 1		EXTEND BELT 9	
2	CRC	EXTEND BELT 2		EXTEND BELT 10	
3	CRD	EXTEND BELT 3		EXTEND BELT 11	
4	CRE	EXTEND BELT 4		EXTEND BELT 12	
5	CRF	EXTEND BELT 5		EXTEND BELT 13	
6	CRG	EXTEND BELT 6		EXTEND BELT 14	
7	CRH	EXTEND BELT 7		EXTEND BELT 15	

NOTE:
1. THE BOARD WIRING SHOWN IS TYPICAL. REFER TO THE DIP SWITCH SETTINGS CHART FOR THE CORRECT DIP SWITCH SETTINGS FOR EACH DEVICE.
2. THE ASTERISK (*) IN THE MTA DESIGNATION REPRESENTS THE BOARD ADDRESS AS GIVEN IN THE DIP SWITCH SETTING CHART.
3. REFER TO THE OUTPUT TABEL FOR A FUNCTIONAL DESCRIPTION OF THE OUTPUTS FOR EACH BOARD ADDRESS.
4. REFER TO THE INPUT TABLE FOR A FUNCTIONAL DESCRIPTION OF THE INPUTS FOR EACH BOARD ADDRESS.

W6DM5EB
MICRO 6 SYSTEMS
DEVICE MASTER
SCHEMATIC: EXTEND BELT
(8 OUTPUT – 16 INPUT)
PELLERIN MILNOR CORPORATION

11 12 13 14 15 16 17

W6DM5EB
2007155B

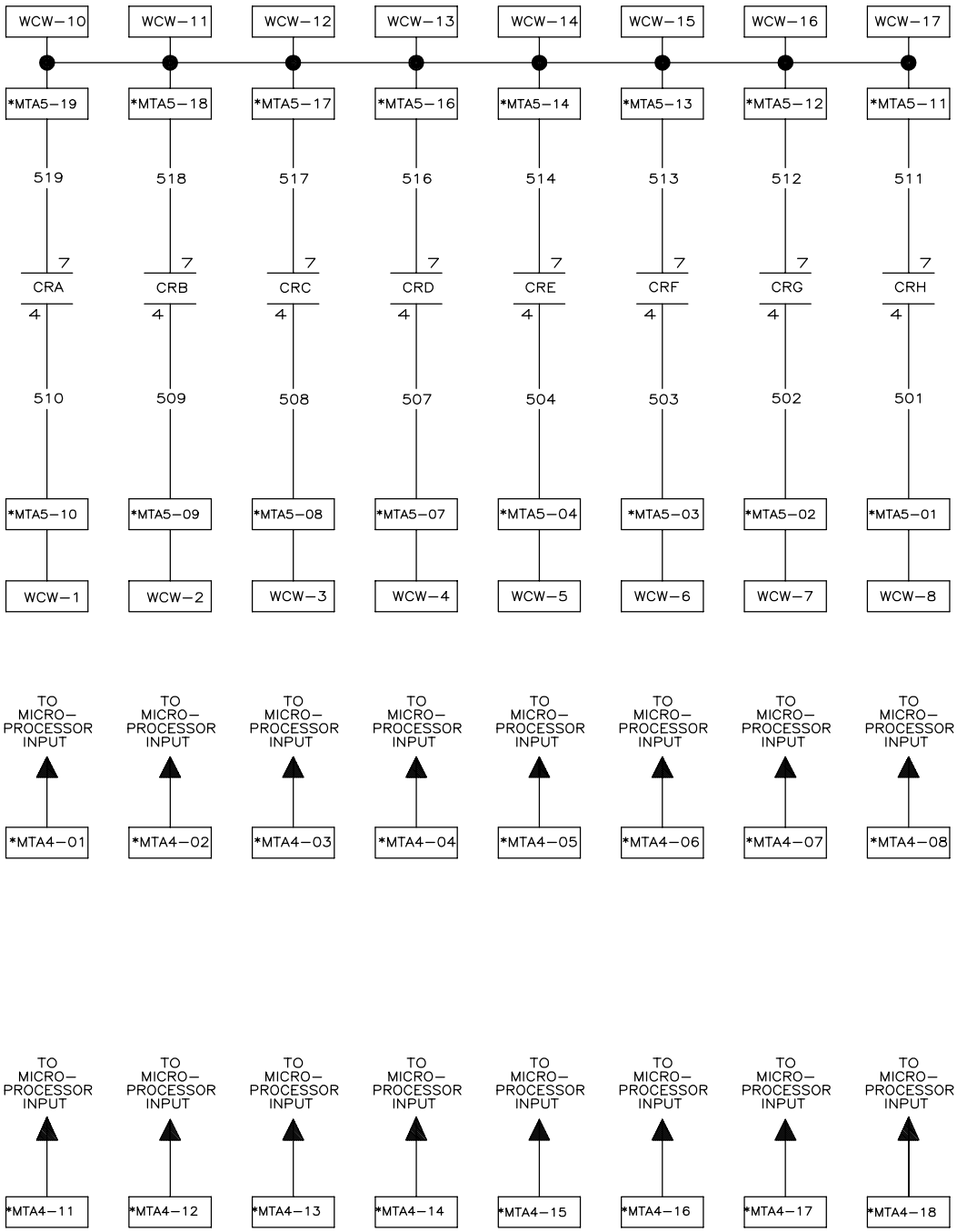

00 01 02 03 04 05 06 07 08 09 10

W6DM5FD
2007155B

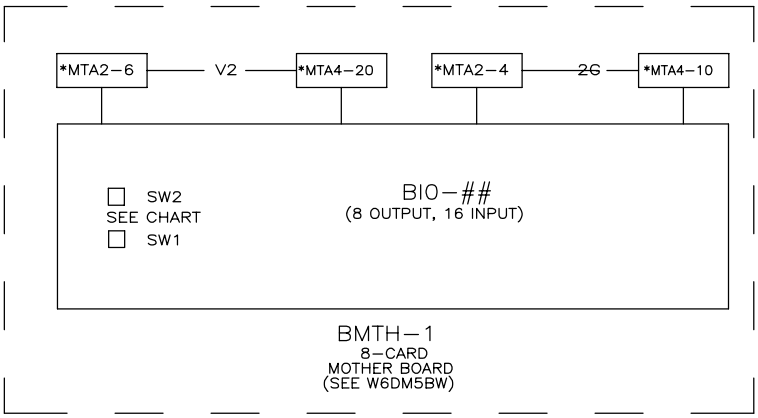

DIP SWITCH SETTING CHART		
DEVICE NUMBER	BOARD ADDRESS	
	SW2	SW1
0	0	5
1		
2		
3		
4		
5		
6		
7		
8	8	5
9		
10		
11		
12		
13		
14		
15		

W6DM5FD
2007155B

OUTPUT TABLE					
		BOARD ADDRESS		BOARD ADDRESS	
		SW2	SW1	SW2	SW1
		0	5	8	5
OUTPUT NUMBER	OUTPUT NAME	OUTPUT FUNCTION		OUTPUT FUNCTION	
0	CRA	FLAG DOWN BELT 0		FLAG DOWN BELT 8	
1	CRB	FLAG DOWN BELT 1		FLAG DOWN BELT 9	
2	CRC	FLAG DOWN BELT 2		FLAG DOWN BELT 10	
3	CRD	FLAG DOWN BELT 3		FLAG DOWN BELT 11	
4	CRE	FLAG DOWN BELT 4		FLAG DOWN BELT 12	
5	CRF	FLAG DOWN BELT 5		FLAG DOWN BELT 13	
6	CRG	FLAG DOWN BELT 6		FLAG DOWN BELT 14	
7	CRH	FLAG DOWN BELT 7		FLAG DOWN BELT 15	

NOTE:
1. THE BOARD WIRING SHOWN IS TYPICAL. REFER TO THE DIP SWITCH SETTINGS CHART FOR THE CORRECT DIP SWITCH SETTINGS FOR EACH DEVICE.
2. THE ASTERISK (*) IN THE MTA DESIGNATION REPRESENTS THE BOARD ADDRESS AS GIVEN IN THE DIP SWITCH SETTING CHART.
3. REFER TO THE OUTPUT TABLE FOR A FUNCTIONAL DESCRIPTION OF THE OUTPUTS FOR EACH BOARD ADDRESS.
4. THE INPUTS FOR THESE BOARD ADDRESSES ARE NOT CURRENTLY USED.

W6DM5FD
MICRO 6 SYSTEMS
DEVICE MASTER
SCHEMATIC: FLAG DOWN
(8 OUTPUT - 16 INPUT)
PELLERIN MILNOR CORPORATION

11 12 13 14 15 16 17

W6DM5FD
2007155B

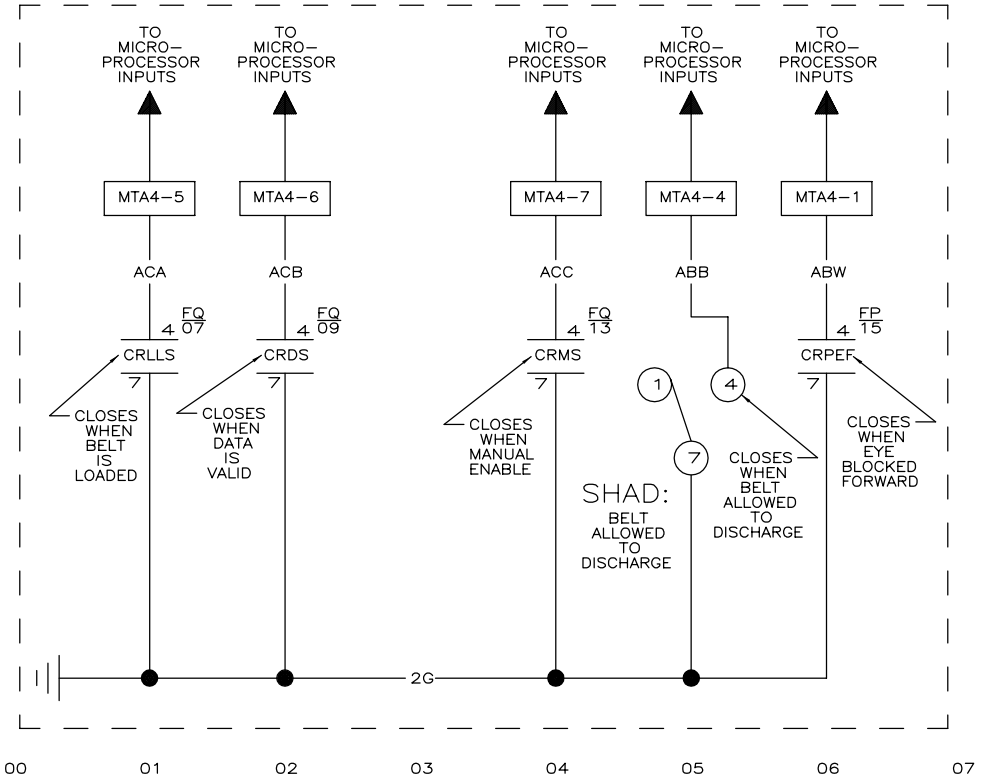

W6DM4FP
2012235B

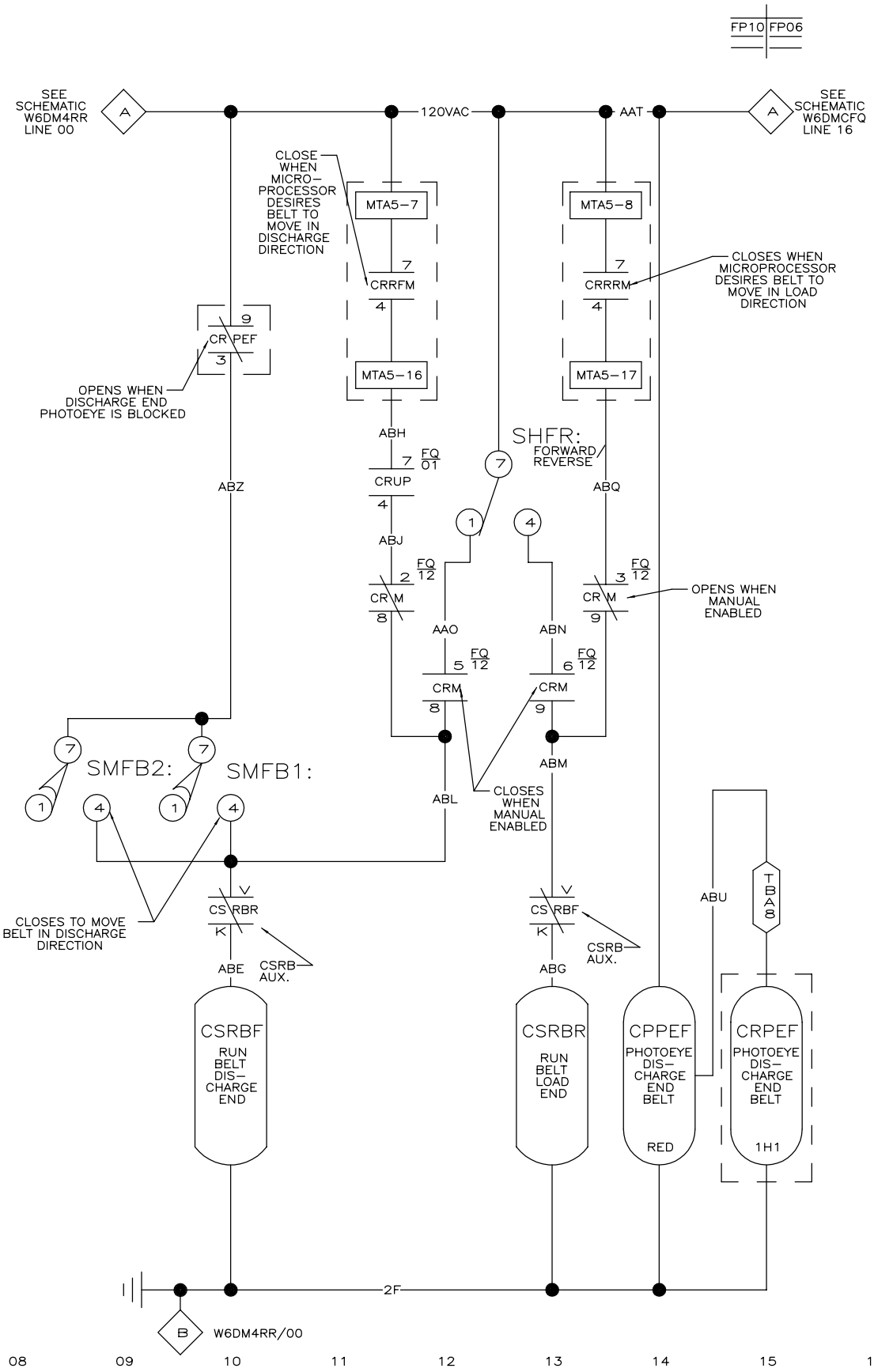

W6DM4FP

MICRO 6 SYSTEMS

SCHEMATIC: BELT CONTROLS FOR DEVICE MASTER LOADING BELT

110V50HZ/120V60HZ/24V50HZ/60HZ

PELLERIN MILNOR CORPORATION

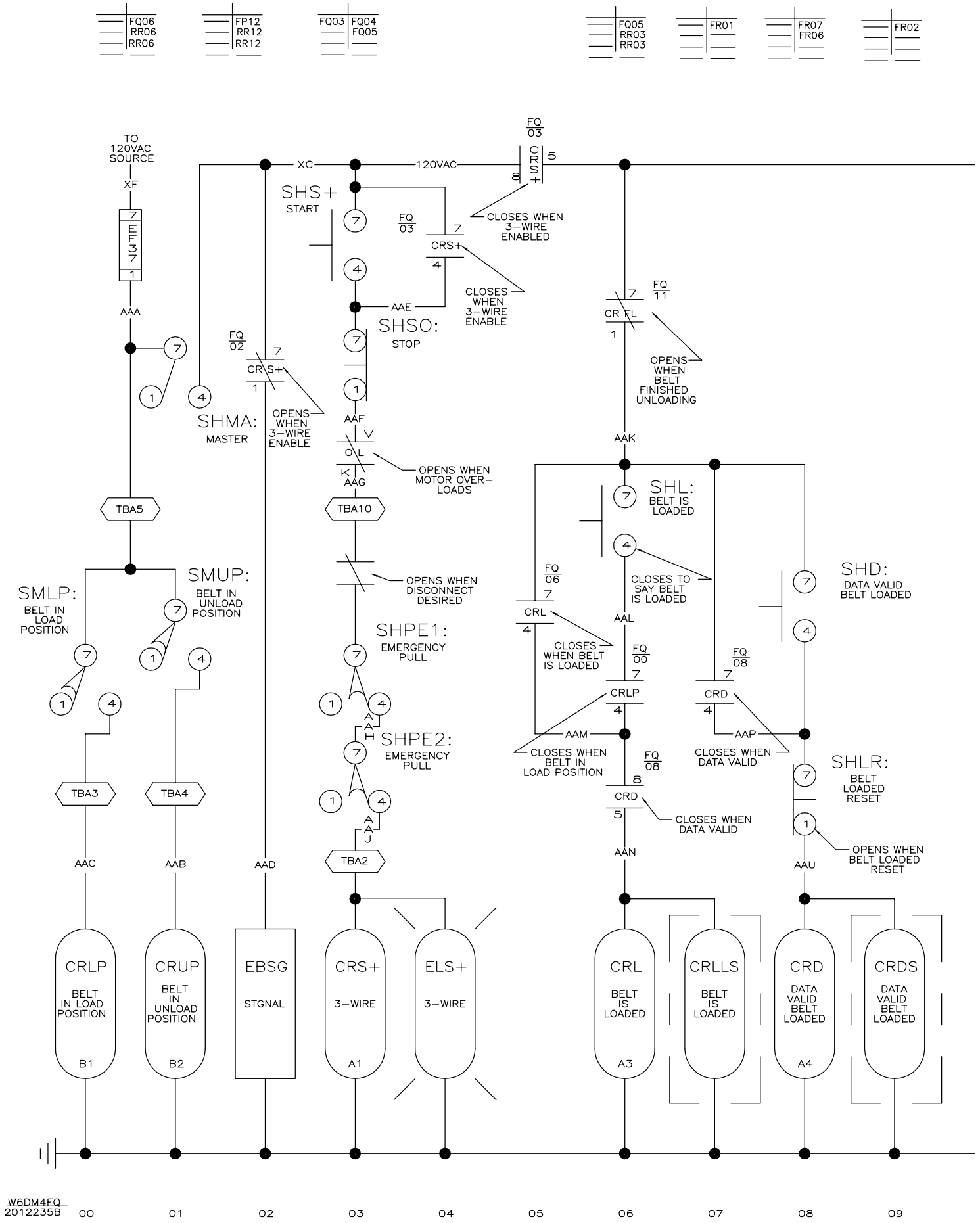
FQ06 RR06 RR06
FP12 RR12 RR12
FQ03 FQ04 FQ05
FQ05 RR03 RR03
FR01
FR07 FR06
FR02
TO 120VAC SOURCE
XF
EF37
AAA
XC
120VAC
FQ 03
CRS+
SHS+
START
CLOSES WHEN 3-WIRE ENABLED
CRS+
CLOSES WHEN 3-WIRE ENABLE
AAE
SHSO:
STOP
FQ 02
CRS+
OPENS WHEN 3-WIRE ENABLE
SHMA:
MASTER
AAF
OL
AAG
OPENS WHEN MOTOR OVER-LOADS
TBA5
TBA10
OPENS WHEN DISCONNECT DESIRED
SHPE1:
EMERGENCY PULL
AAH
SHPE2:
EMERGENCY PULL
AAJ
TBA2
SMLP:
BELT IN LOAD POSITION
SMUP:
BELT IN UNLOAD POSITION
TBA3
TBA4
AAC
AAB
AAD
FQ 11
CR FL
OPENS WHEN BELT FINISHED UNLOADING
AAK
SHL:
BELT IS LOADED
FQ 06
CRL
CLOSES TO SAY BELT IS LOADED
AAL
CLOSES WHEN BELT IS LOADED
FQ 00
CRLP
AAM
CLOSES WHEN BELT IN LOAD POSITION
FQ 08
CRD
CLOSES WHEN DATA VALID
AAP
CLOSES WHEN DATA VALID
SHD:
DATA VALID BELT LOADED
SHLR:
BELT LOADED RESET
OPENS WHEN BELT LOADED RESET
AAN
AAU
CRLP
BELT IN LOAD POSITION
B1
CRUP
BELT IN UNLOAD POSITION
B2
EBSG
STGNAL
CRS+
3-WIRE
A1
ELS+
3-WIRE
CRL
BELT IS LOADED
A3
CRLLS
BELT IS LOADED
CRD
DATA VALID BELT LOADED
A4
CRDS
DATA VALID BELT LOADED
W6DM4FQ
2012235B
00
01
02
03
04
05
06
07
08
09

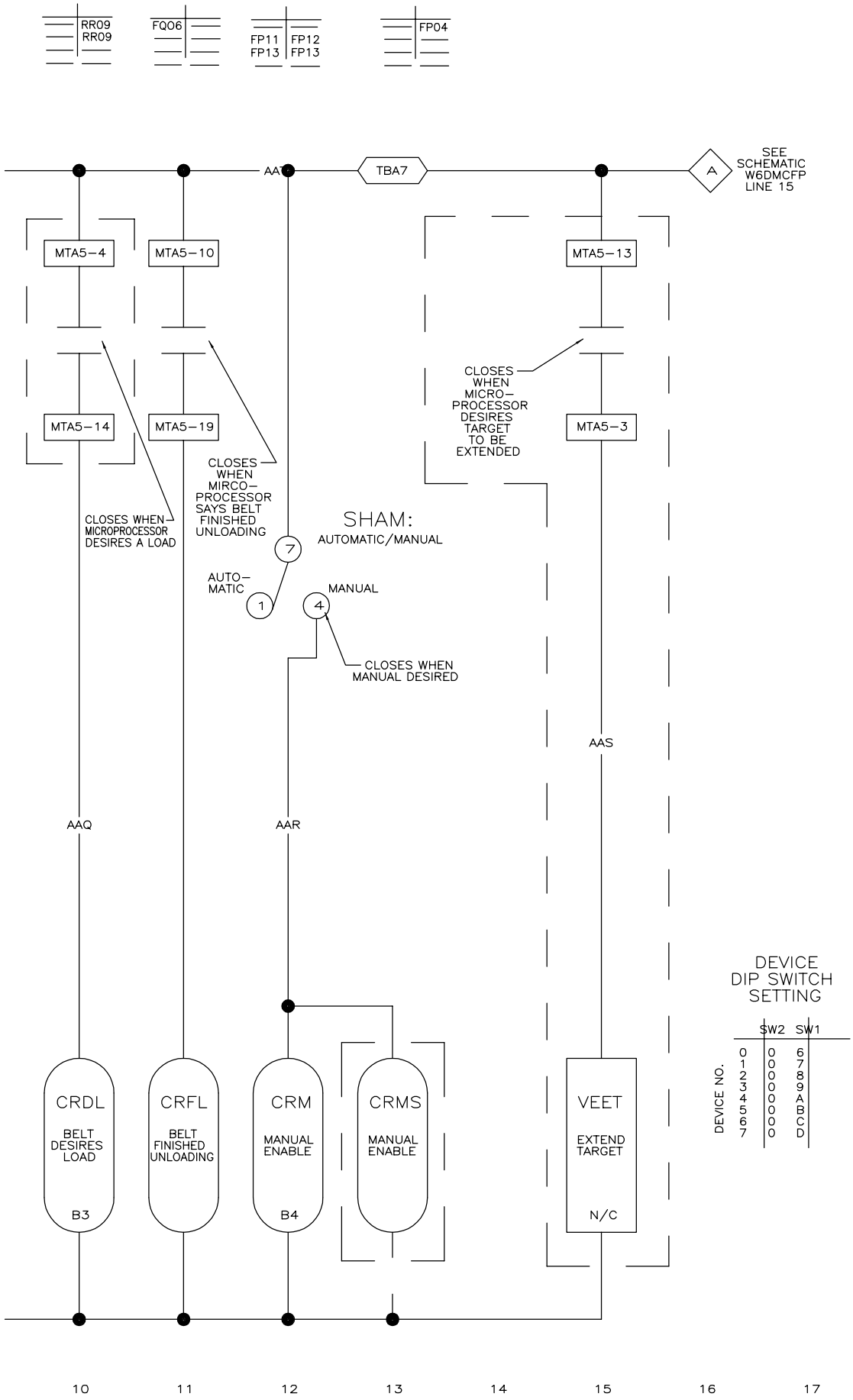

DEVICE DIP SWITCH SETTING

DEVICE NO.	SW2	SW1
0	0	6
1	0	7
2	0	8
3	0	9
4	0	A
5	0	B
6	0	C
7	0	D

W6DM4FQ
2012235B

W6DM4FQ
MICRO 6 SYSTEMS
SCHEMATIC: BELT CONTROLS FOR DEVICE MASTER LOADING BELT
110V50HZ/120V60HZ
PELLERIN MILNOR CORPORATION

W6DM4FQ
2012235B

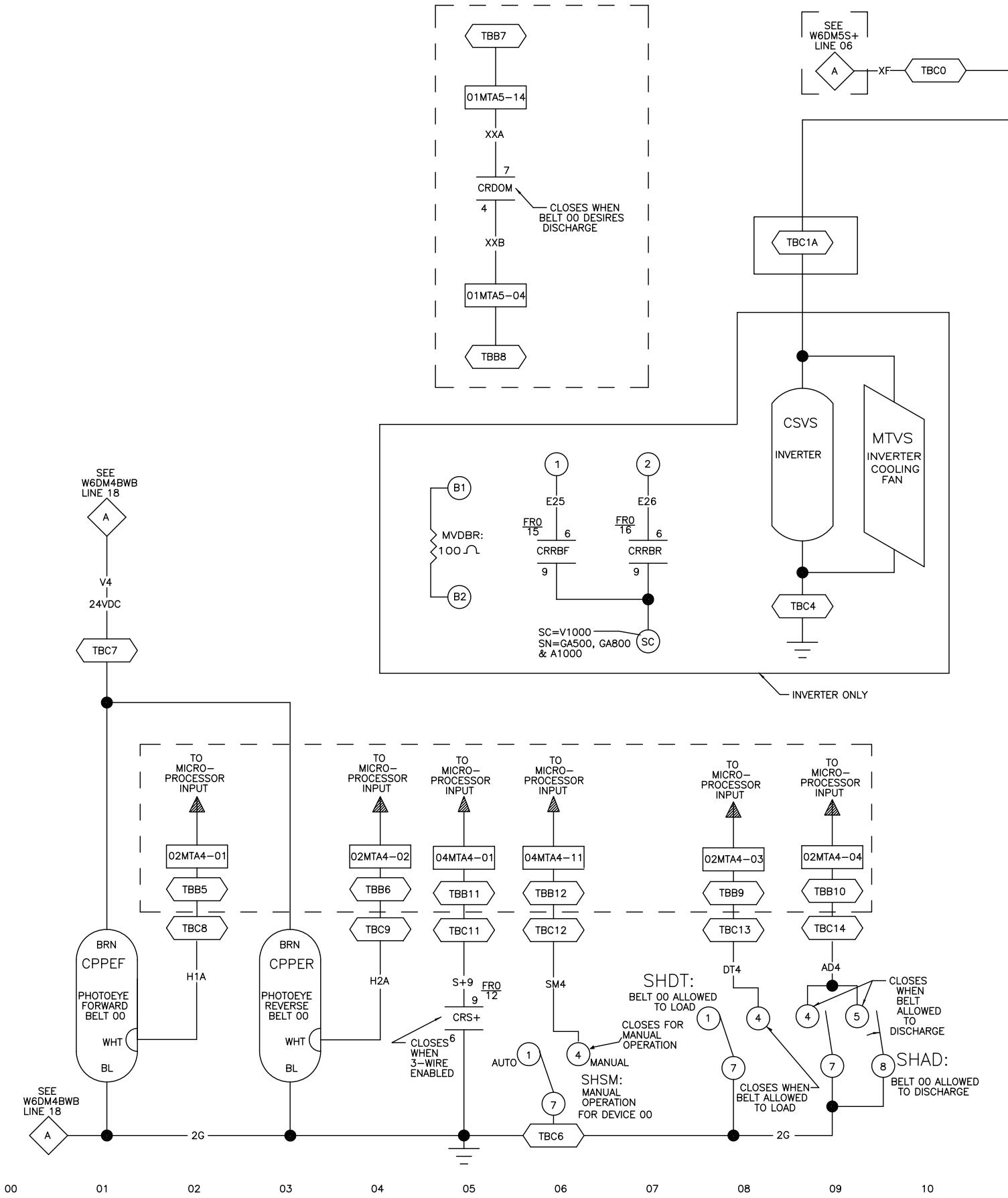

W6DM5FR0
2023383B

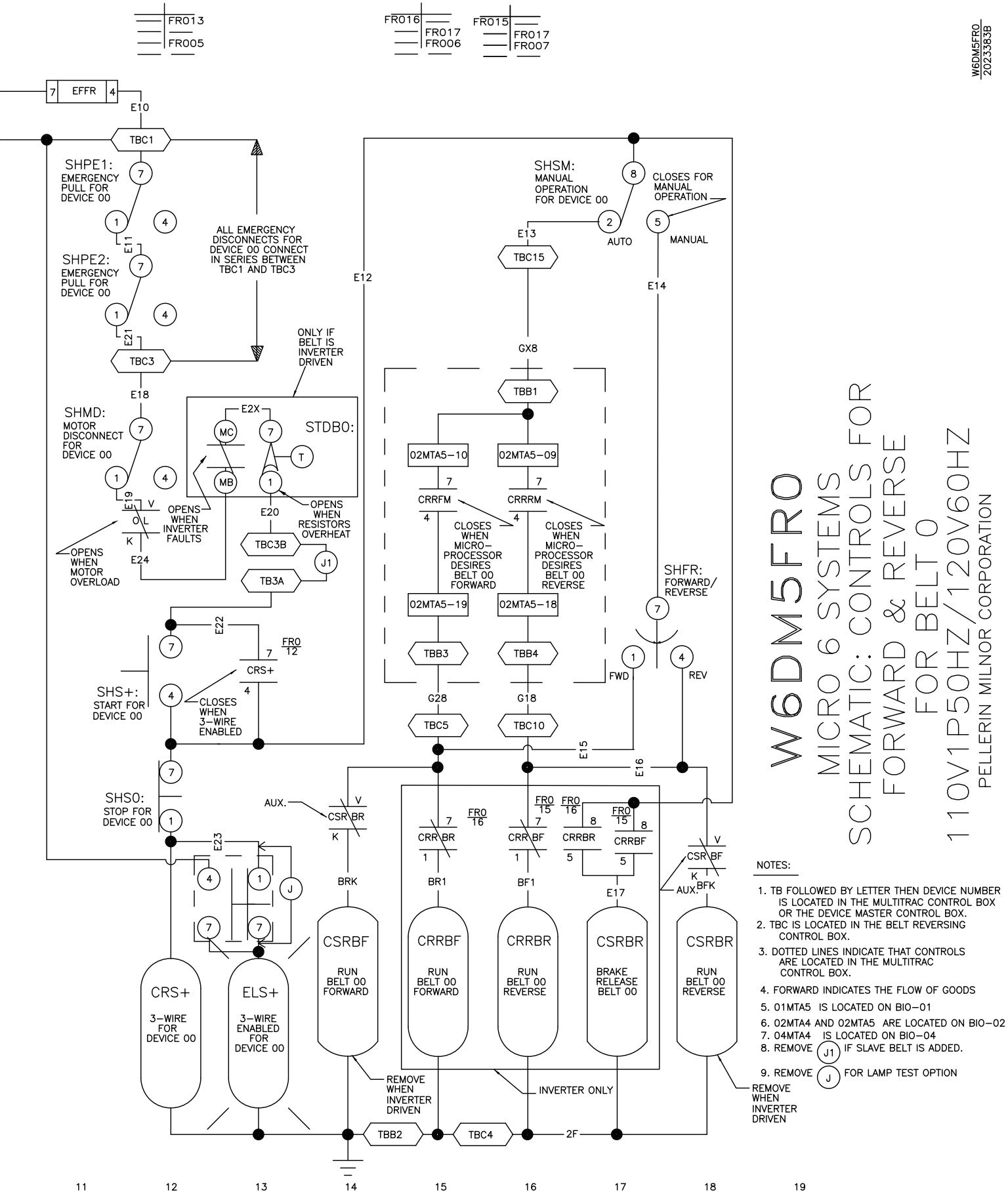

NOTES:

1. TB FOLLOWED BY LETTER THEN DEVICE NUMBER IS LOCATED IN THE MULTITRAC CONTROL BOX OR THE DEVICE MASTER CONTROL BOX.
2. TBC IS LOCATED IN THE BELT REVERSING CONTROL BOX.
3. DOTTED LINES INDICATE THAT CONTROLS ARE LOCATED IN THE MULTITRAC CONTROL BOX.
4. FORWARD INDICATES THE FLOW OF GOODS
5. 01MTA5 IS LOCATED ON BIO-01
6. 02MTA4 AND 02MTA5 ARE LOCATED ON BIO-02
7. 04MTA4 IS LOCATED ON BIO-04
8. REMOVE (J1) IF SLAVE BELT IS ADDED.
9. REMOVE (J) FOR LAMP TEST OPTION

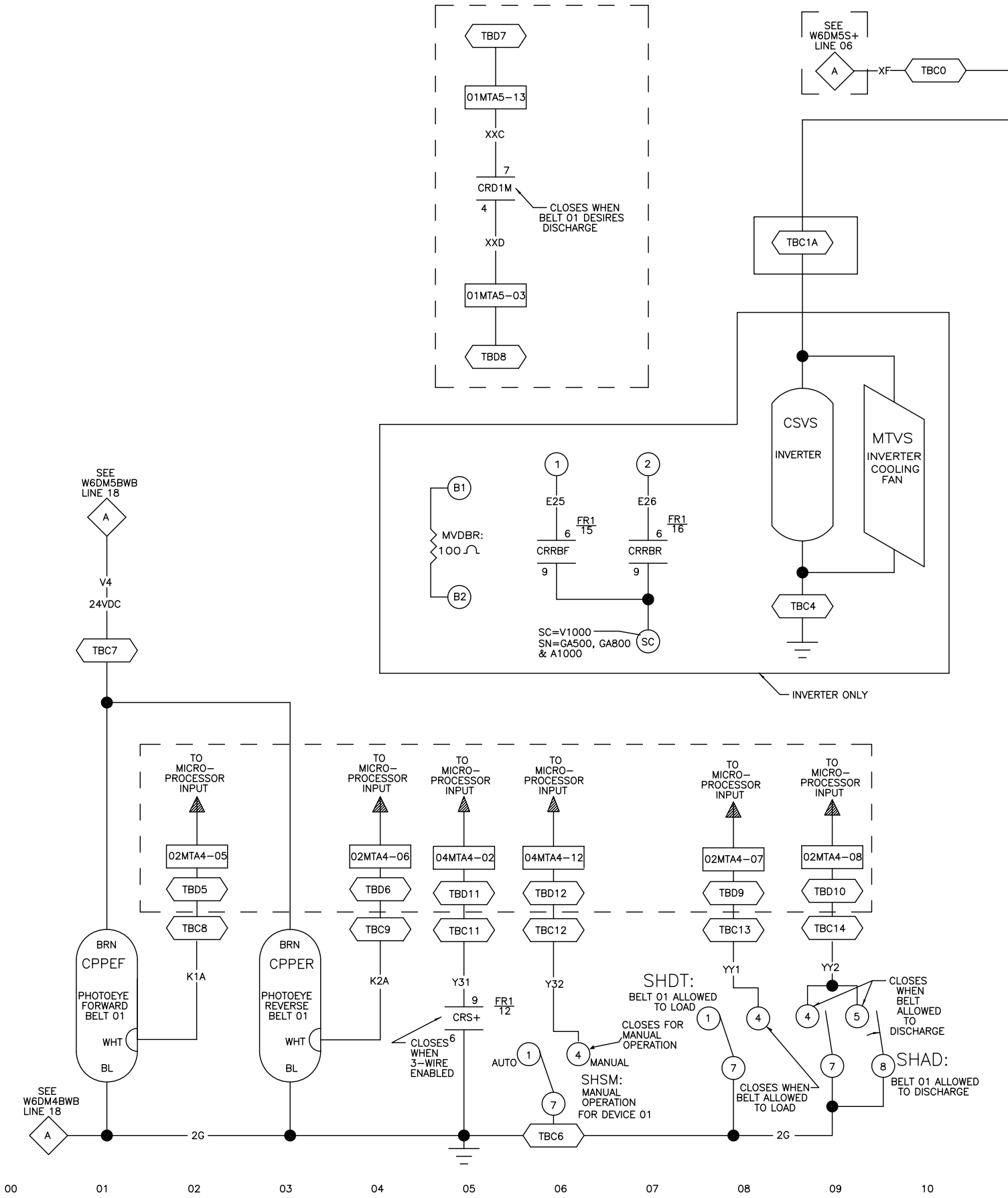

W6DM5FR1
2023383B

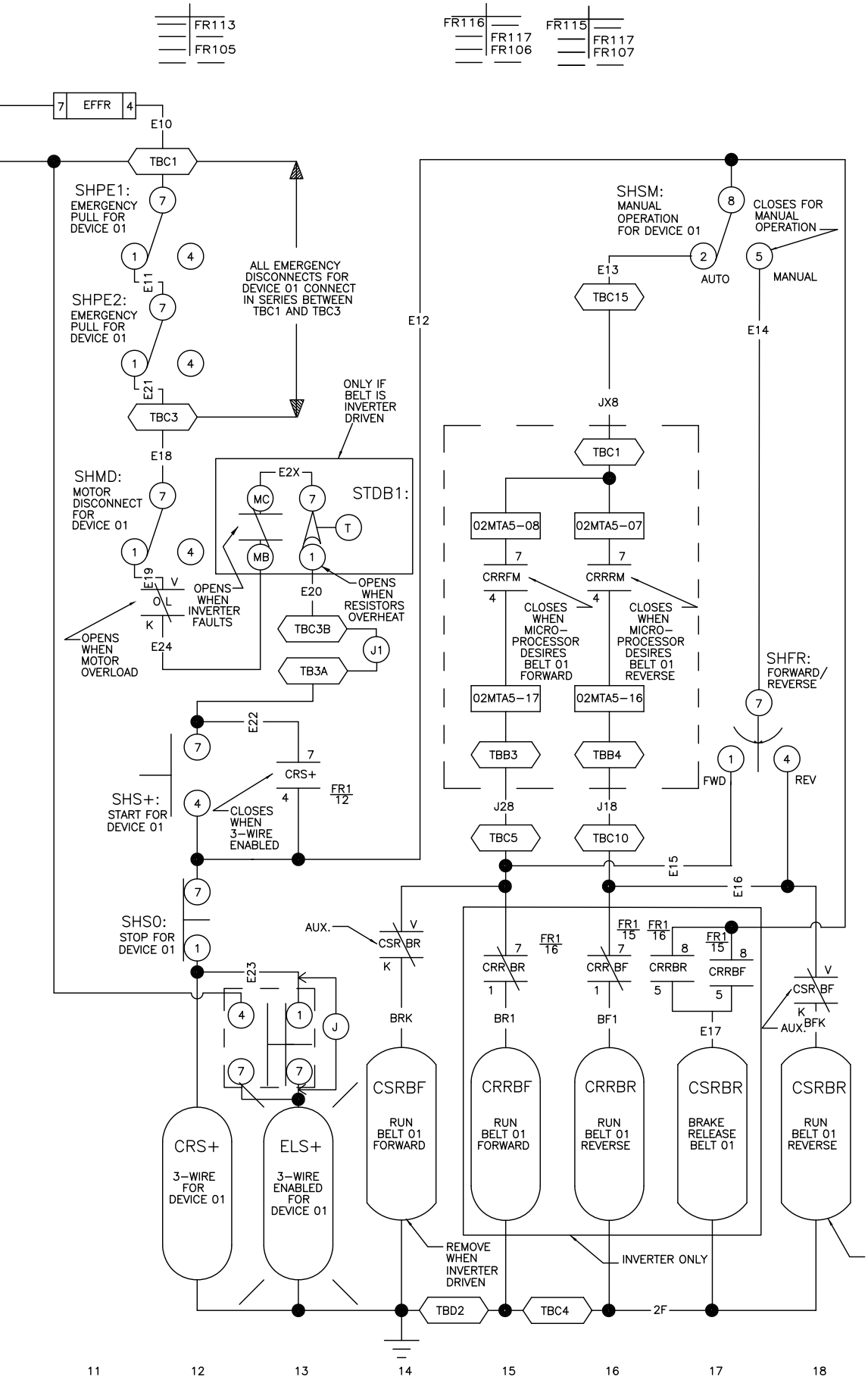

W6DM5FR1

MICRO 6 SYSTEMS SCHEMATIC: CONTROLS FOR FORWARD & REVERSE FOR BELT 1

110V1P50HZ/120V60HZ

PELLERIN MILNOR CORPORATION

NOTES:

1. TB FOLLOWED BY LETTER THEN DEVICE NUMBER IS LOCATED IN THE MULTITRAC CONTROL BOX OR THE DEVICE MASTER CONTROL BOX.
2. TBC IS LOCATED IN THE BELT REVERSING CONTROL BOX.
3. DOTTED LINES INDICATE THAT CONTROLS ARE LOCATED IN THE MULTITRAC CONTROL BOX.
4. FORWARD INDICATES THE FLOW OF GOODS
5. 01MTA5 IS LOCATED ON BIO-01
6. 02MTA4 AND 02MTA5 ARE LOCATED ON BIO-02
7. 04MTA4 IS LOCATED ON BIO-04
8. REMOVE (J1) IF SLAVE BELT IS ADDED.
9. REMOVE (J) FOR LAMP TEST OPTION

W6DM5FR1
2023383B

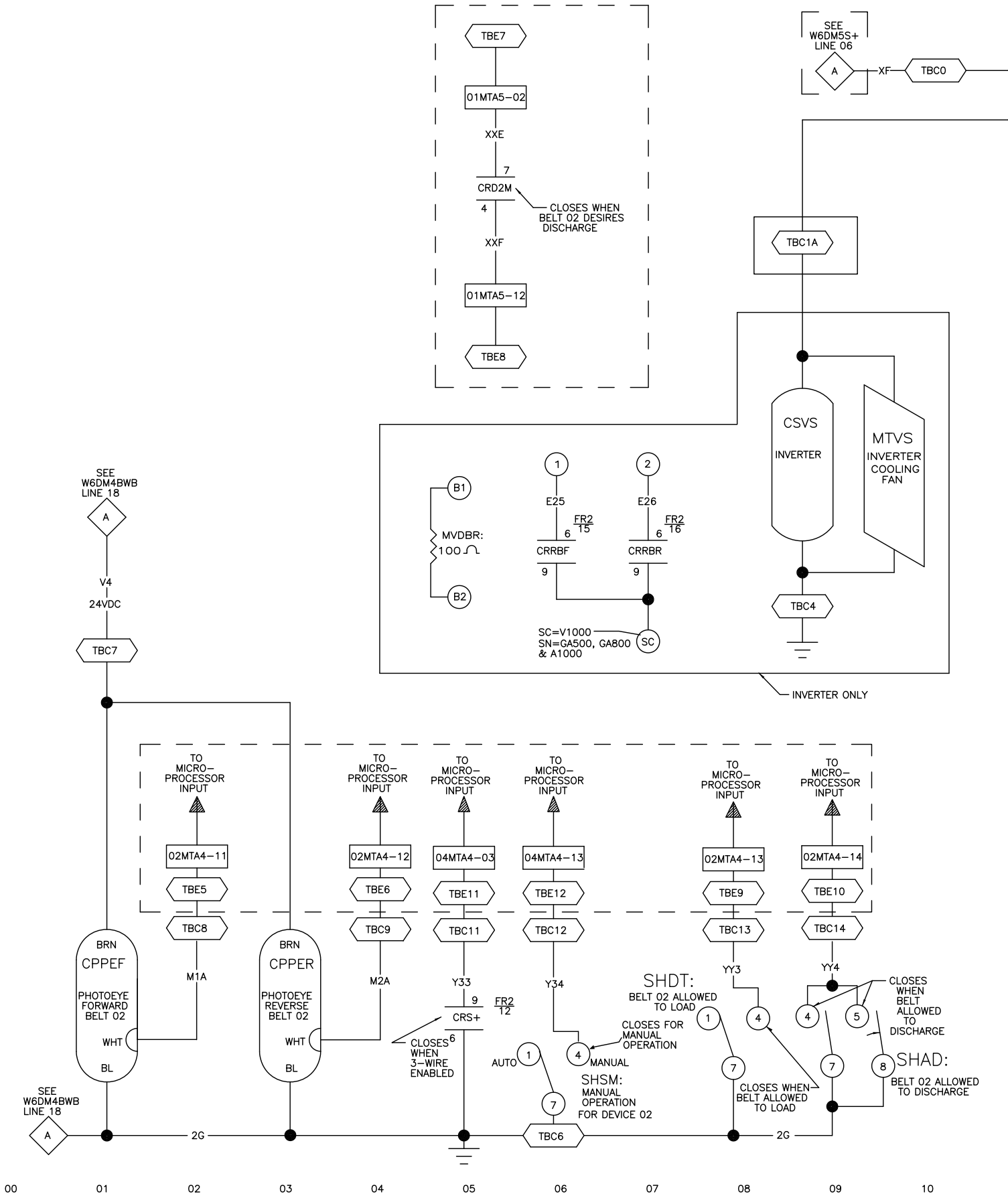

W6DM5FR2
2023383B

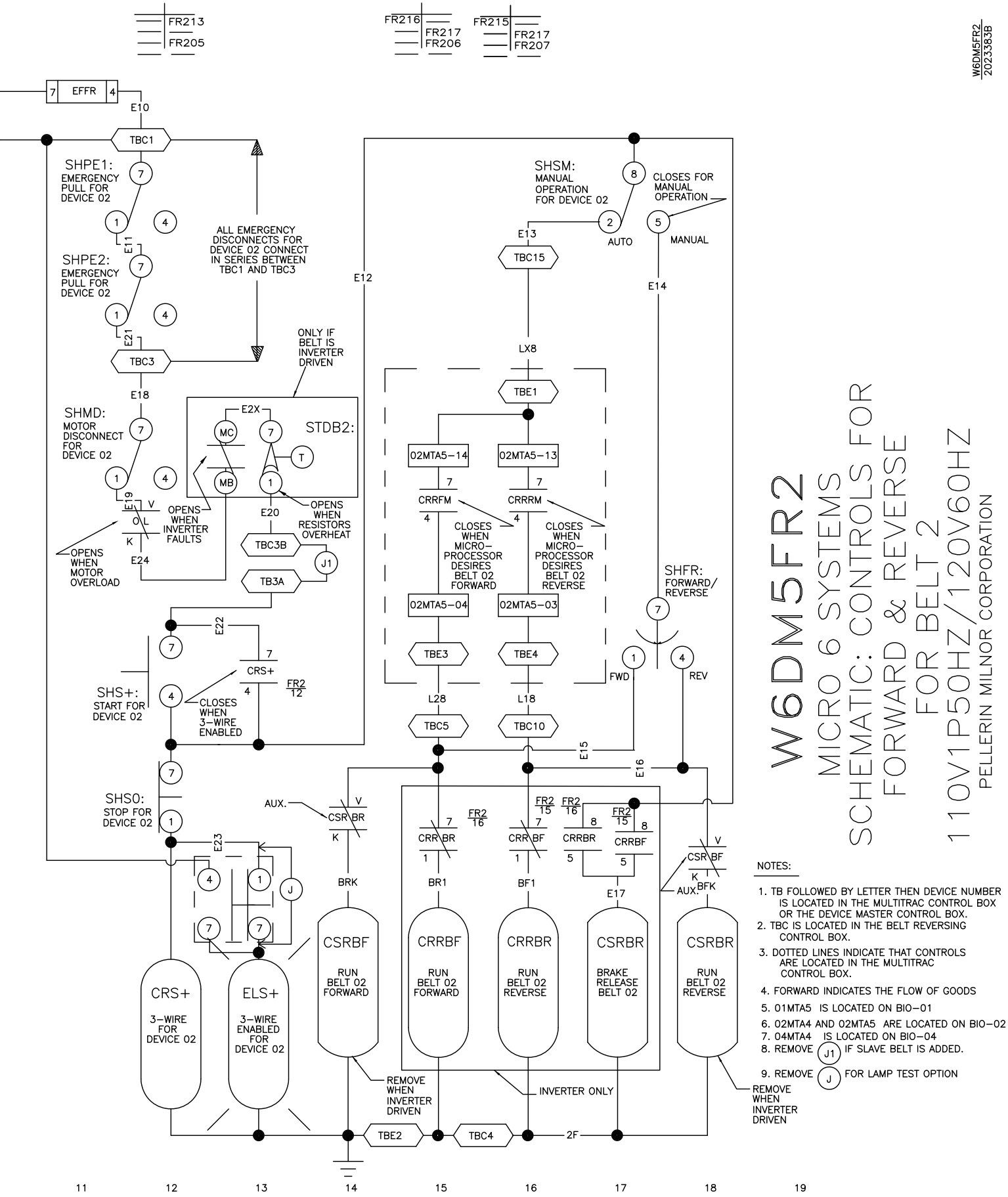

NOTES:

1. TB FOLLOWED BY LETTER THEN DEVICE NUMBER IS LOCATED IN THE MULTITRAC CONTROL BOX OR THE DEVICE MASTER CONTROL BOX.
2. TBC IS LOCATED IN THE BELT REVERSING CONTROL BOX.
3. DOTTED LINES INDICATE THAT CONTROLS ARE LOCATED IN THE MULTITRAC CONTROL BOX.
4. FORWARD INDICATES THE FLOW OF GOODS
5. 01MTA5 IS LOCATED ON BIO-01
6. 02MTA4 AND 02MTA5 ARE LOCATED ON BIO-02
7. 04MTA4 IS LOCATED ON BIO-04
8. REMOVE (J1) IF SLAVE BELT IS ADDED.
9. REMOVE (J) FOR LAMP TEST OPTION

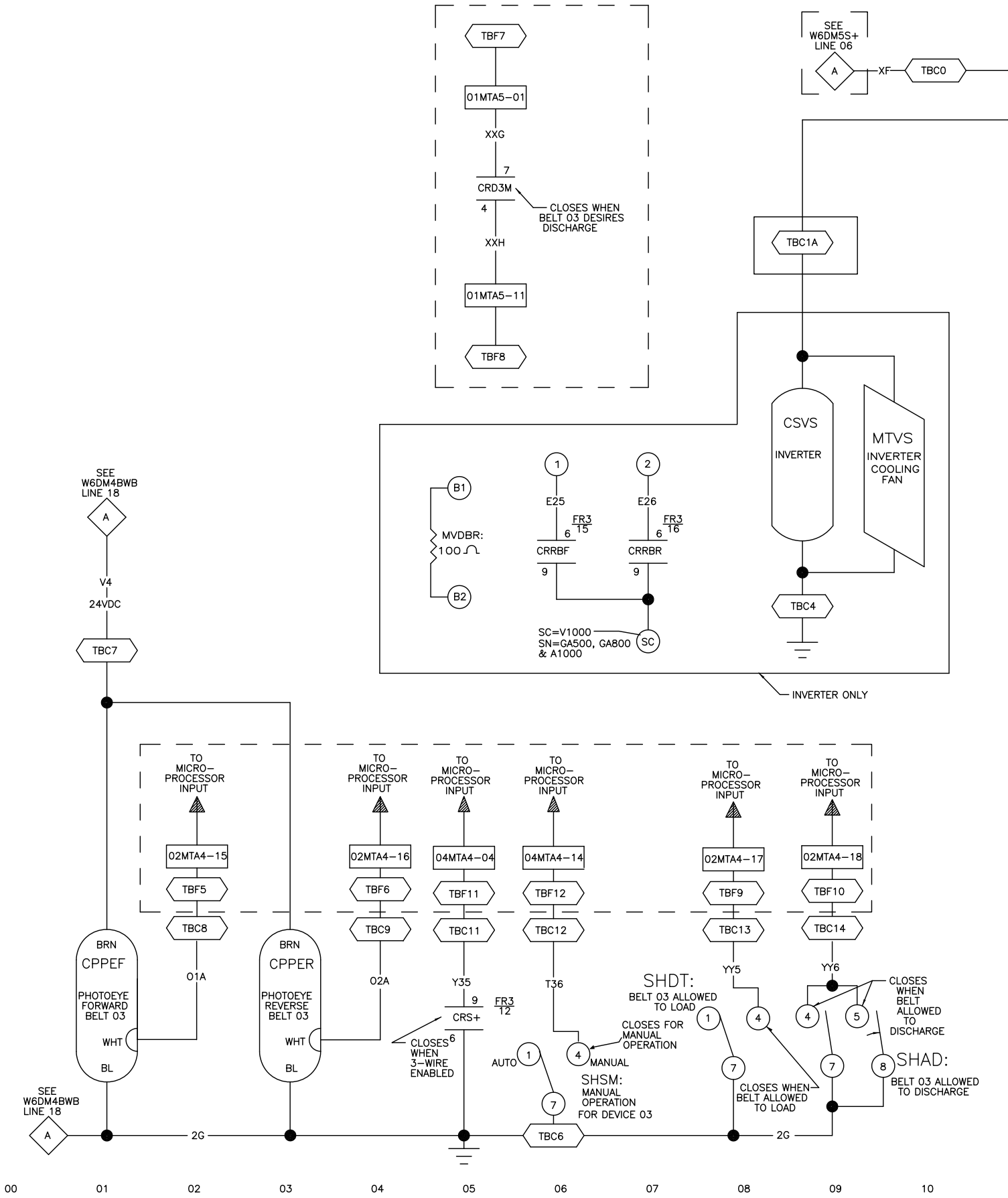

W6DM5FR3
2023383B

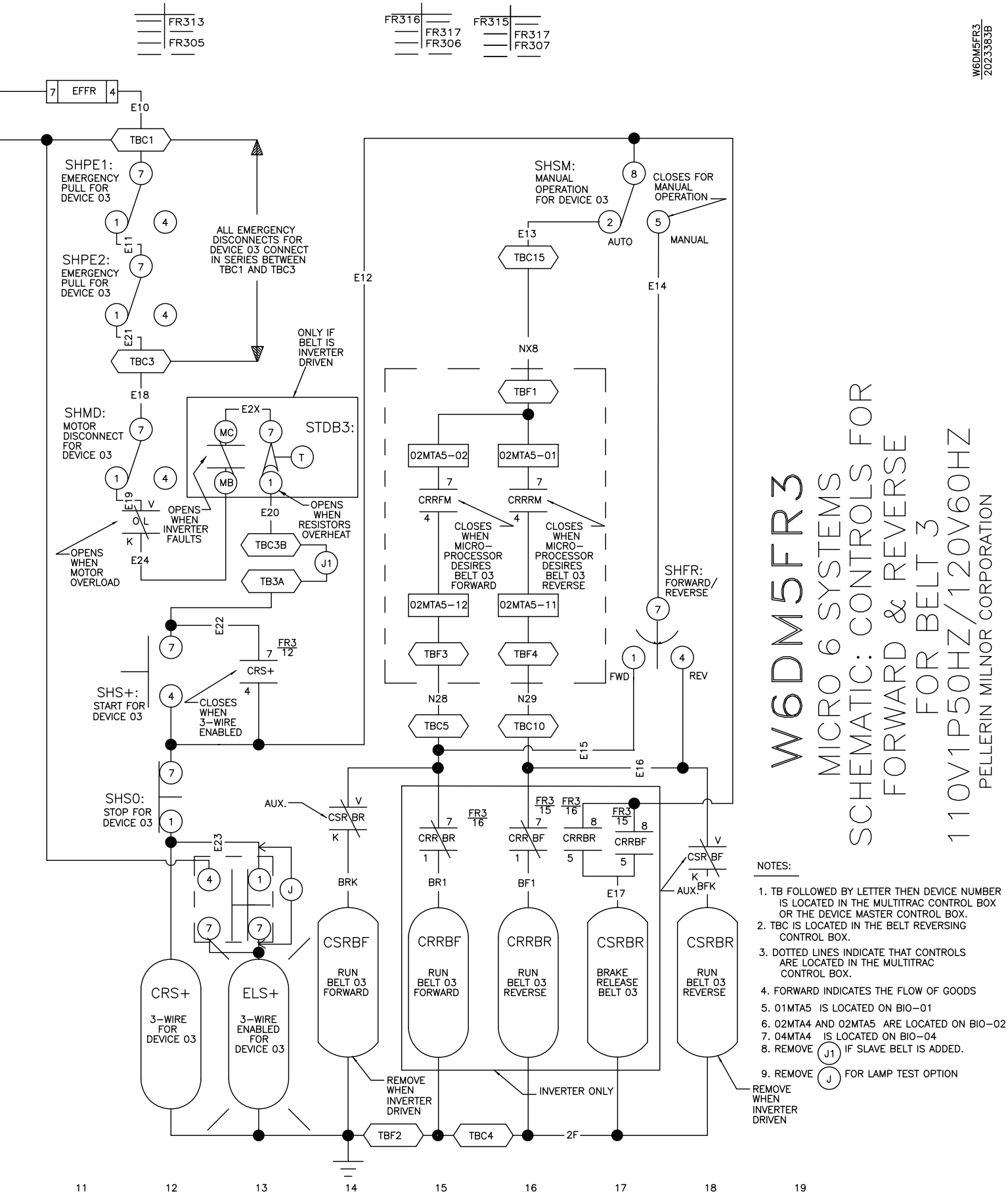

NOTES:

1. TB FOLLOWED BY LETTER THEN DEVICE NUMBER IS LOCATED IN THE MULTITRAC CONTROL BOX OR THE DEVICE MASTER CONTROL BOX.
2. TBC IS LOCATED IN THE BELT REVERSING CONTROL BOX.
3. DOTTED LINES INDICATE THAT CONTROLS ARE LOCATED IN THE MULTITRAC CONTROL BOX.
4. FORWARD INDICATES THE FLOW OF GOODS
5. 01MTA5 IS LOCATED ON BIO-01
6. 02MTA4 AND 02MTA5 ARE LOCATED ON BIO-02
7. 04MTA4 IS LOCATED ON BIO-04
8. REMOVE (J1) IF SLAVE BELT IS ADDED.
9. REMOVE (J) FOR LAMP TEST OPTION

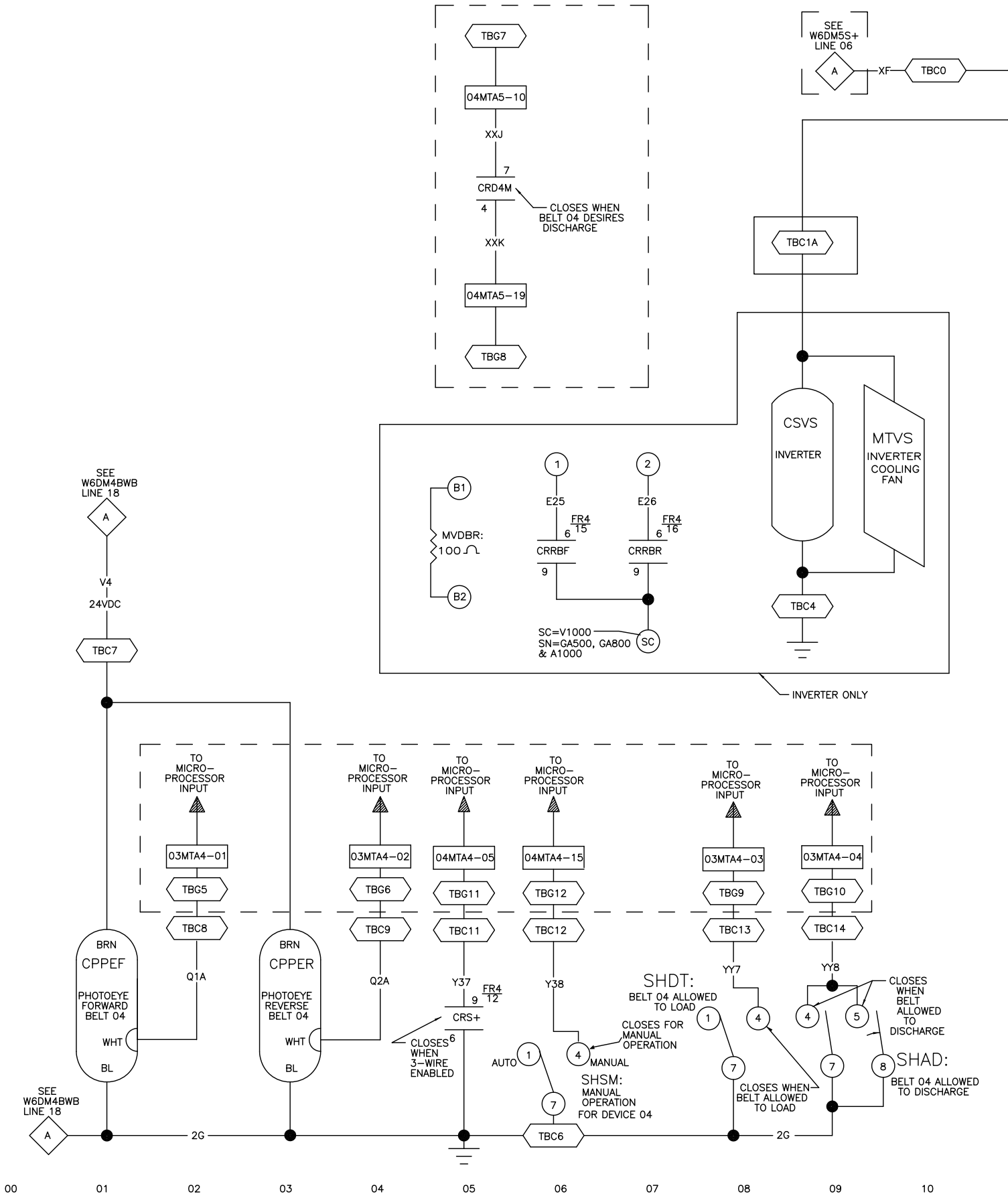

W6DM5FR4
2023383B

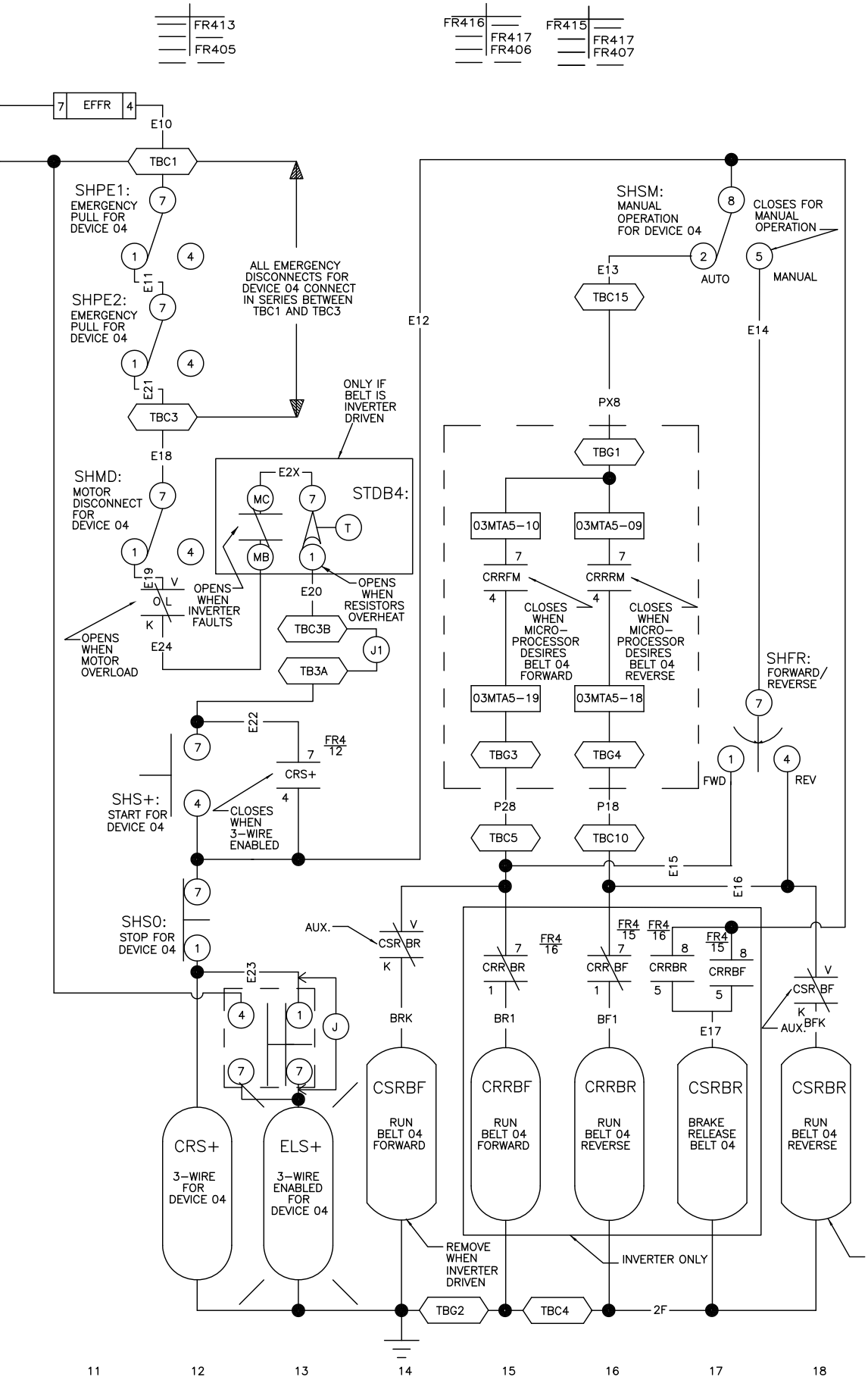

W6DM5FR4

MICRO 6 SYSTEMS SCHEMATIC: CONTROLS FOR FORWARD & REVERSE FOR BELT 4

110V1P50HZ/120V60HZ

PELLERIN MILNOR CORPORATION

NOTES:

1. TB FOLLOWED BY LETTER THEN DEVICE NUMBER IS LOCATED IN THE MULTITRAC CONTROL BOX OR THE DEVICE MASTER CONTROL BOX.
2. TBC IS LOCATED IN THE BELT REVERSING CONTROL BOX.
3. DOTTED LINES INDICATE THAT CONTROLS ARE LOCATED IN THE MULTITRAC CONTROL BOX.
4. FORWARD INDICATES THE FLOW OF GOODS
5. 01MTA5 IS LOCATED ON BIO-01
6. 03MTA4 AND 03MTA5 ARE LOCATED ON BIO-02
7. 04MTA4 IS LOCATED ON BIO-04
8. REMOVE (J1) IF SLAVE BELT IS ADDED.
9. REMOVE (J) FOR LAMP TEST OPTION

W6DM5FR4
2023383B

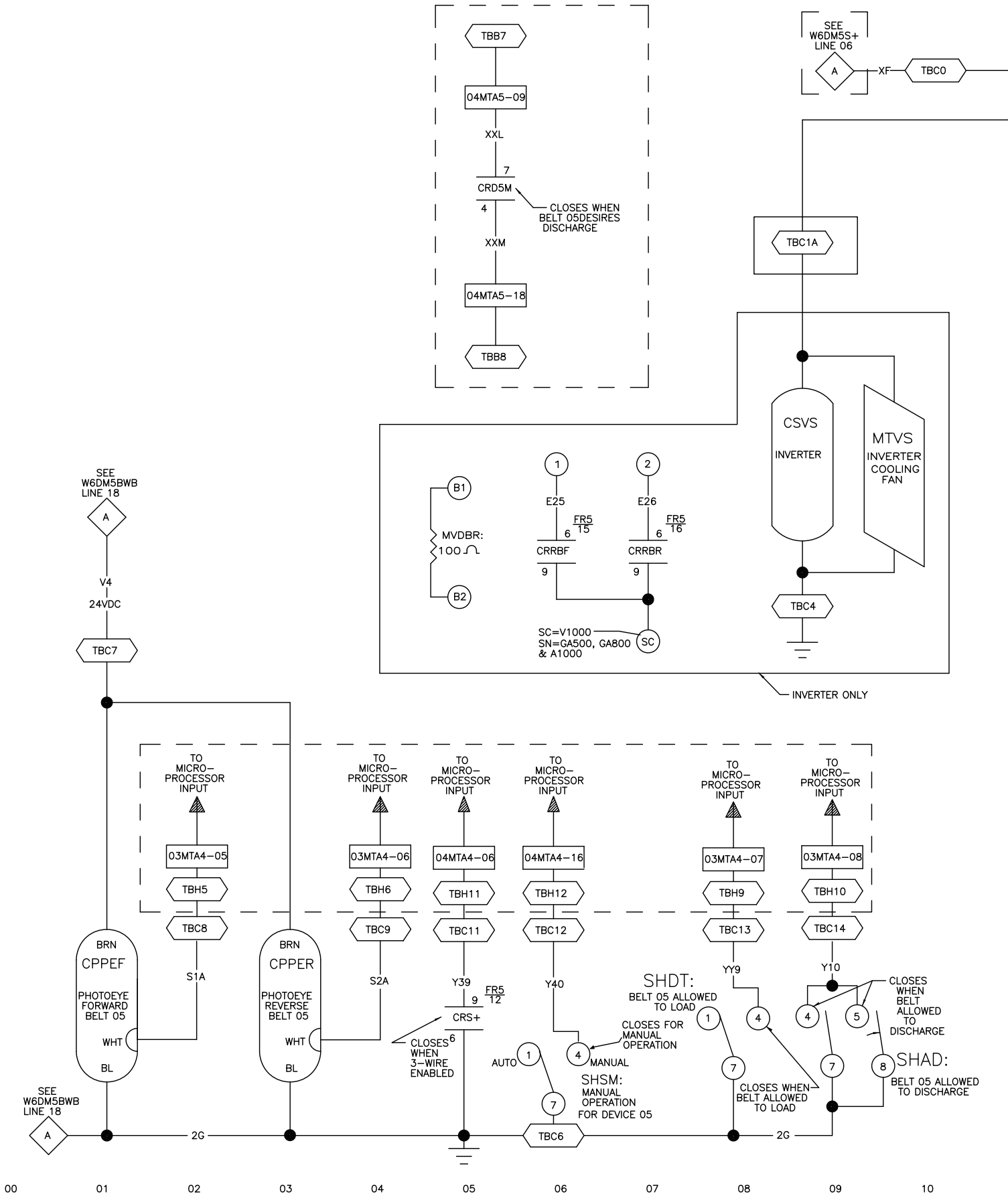

W6DM5FR5
2023383B

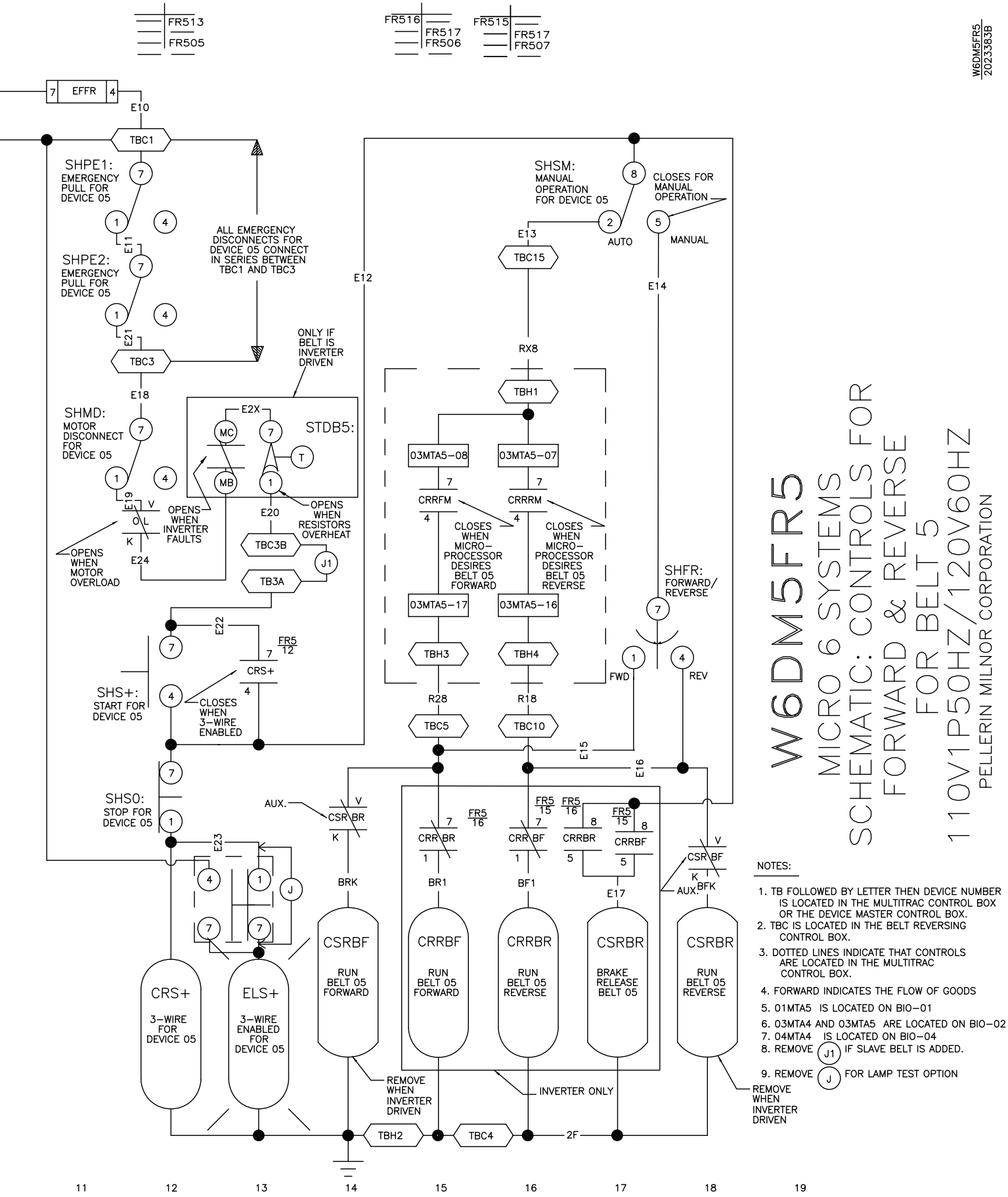
W6DM5FR5
MICRO 6 SYSTEMS
SCHEMATIC: CONTROLS FOR
FORWARD & REVERSE
FOR BELT 5
110V1P50HZ/120V60HZ
PELLERIN MILNOR CORPORATION
W6DM5FR5
2023383B
FR513
FR505
FR516
FR517
FR506
FR515
FR517
FR507
EFFR
E10
TBC1
SHPE1:
EMERGENCY PULL FOR DEVICE 05
SHPE2:
EMERGENCY PULL FOR DEVICE 05
ALL EMERGENCY DISCONNECTS FOR DEVICE 05 CONNECT IN SERIES BETWEEN TBC1 AND TBC3
TBC3
E18
SHMD:
MOTOR DISCONNECT FOR DEVICE 05
ONLY IF BELT IS INVERTER DRIVEN
STDB5:
OPENS WHEN INVERTER FAULTS
OPENS WHEN RESISTORS OVERHEAT
OPENS WHEN MOTOR OVERLOAD
TBC3B
TB3A
SHS+:
START FOR DEVICE 05
CLOSES WHEN 3-WIRE ENABLED
CRS+
SHS0:
STOP FOR DEVICE 05
AUX.
CSRBR
CRRBR
CRRBF
CSRBF
CRS+
3-WIRE FOR DEVICE 05
ELS+
3-WIRE ENABLED FOR DEVICE 05
CSRBF
RUN BELT 05 FORWARD
CRRBF
RUN BELT 05 FORWARD
CRRBR
RUN BELT 05 REVERSE
CSRBR
BRAKE RELEASE BELT 05
CSRBR
RUN BELT 05 REVERSE
REMOVE WHEN INVERTER DRIVEN
INVERTER ONLY
TBH2
TBC4
2F
SHSM:
MANUAL OPERATION FOR DEVICE 05
CLOSES FOR MANUAL OPERATION
AUTO
MANUAL
TBC15
RX8
TBH1
03MTA5-08
03MTA5-07
CRRFM
CRRRM
CLOSES WHEN MICRO-PROCESSOR DESIRES BELT 05 FORWARD
CLOSES WHEN MICRO-PROCESSOR DESIRES BELT 05 REVERSE
03MTA5-17
03MTA5-16
TBH3
TBH4
R28
R18
TBC5
TBC10
SHFR:
FORWARD/REVERSE
FWD
REV
E12
E13
E14
E15
E16
E17
E19
E20
E21
E22
E23
E24
NOTES:
1. TB FOLLOWED BY LETTER THEN DEVICE NUMBER IS LOCATED IN THE MULTITRAC CONTROL BOX OR THE DEVICE MASTER CONTROL BOX.
2. TBC IS LOCATED IN THE BELT REVERSING CONTROL BOX.
3. DOTTED LINES INDICATE THAT CONTROLS ARE LOCATED IN THE MULTITRAC CONTROL BOX.
4. FORWARD INDICATES THE FLOW OF GOODS
5. 01MTA5 IS LOCATED ON BIO-01
6. 03MTA4 AND 03MTA5 ARE LOCATED ON BIO-02
7. 04MTA4 IS LOCATED ON BIO-04
8. REMOVE J1 IF SLAVE BELT IS ADDED.
9. REMOVE J FOR LAMP TEST OPTION
11
12
13
14
15
16
17
18
19
W6DM5FR5
2023383B

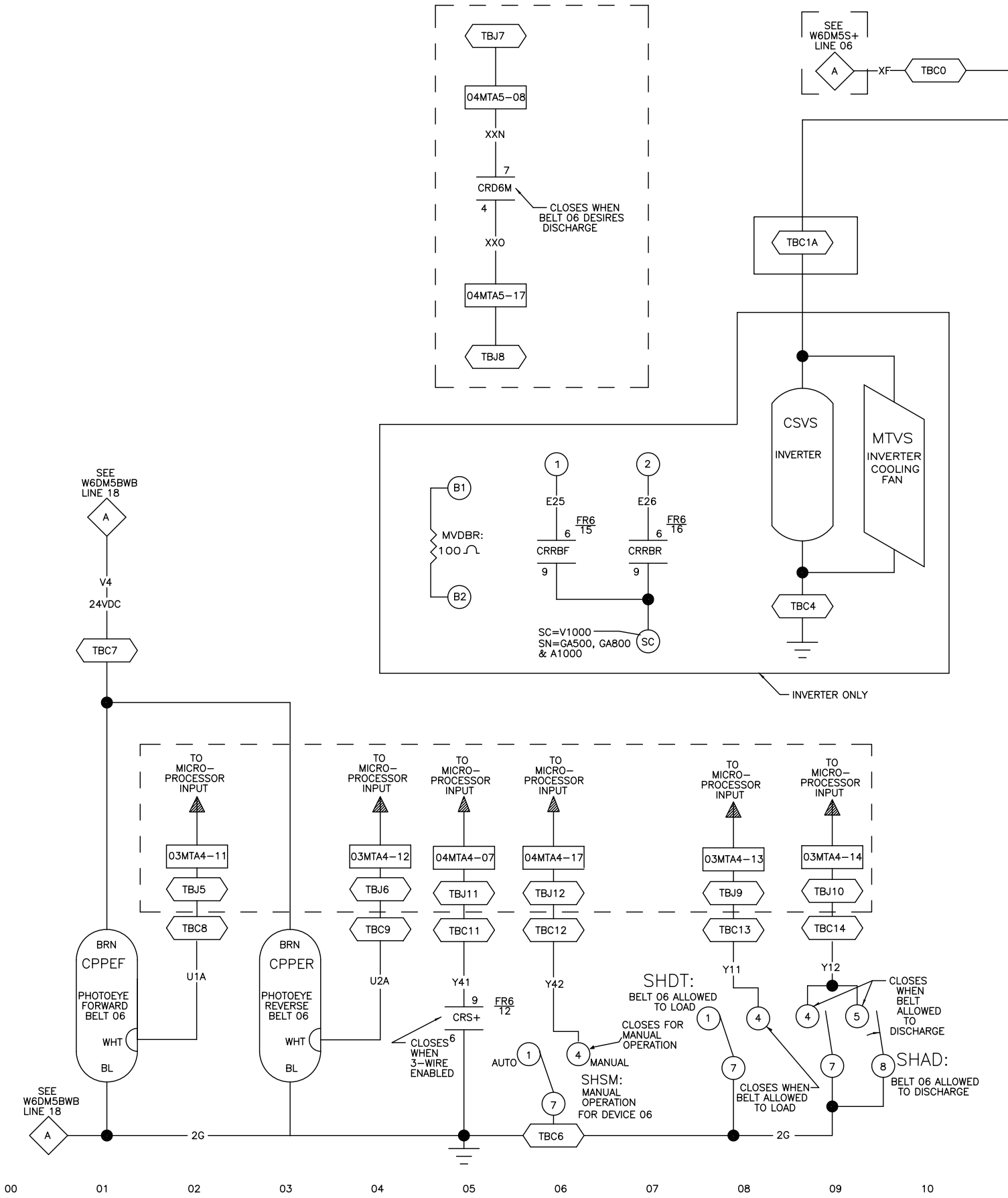

W6DM5FR6
2023195B

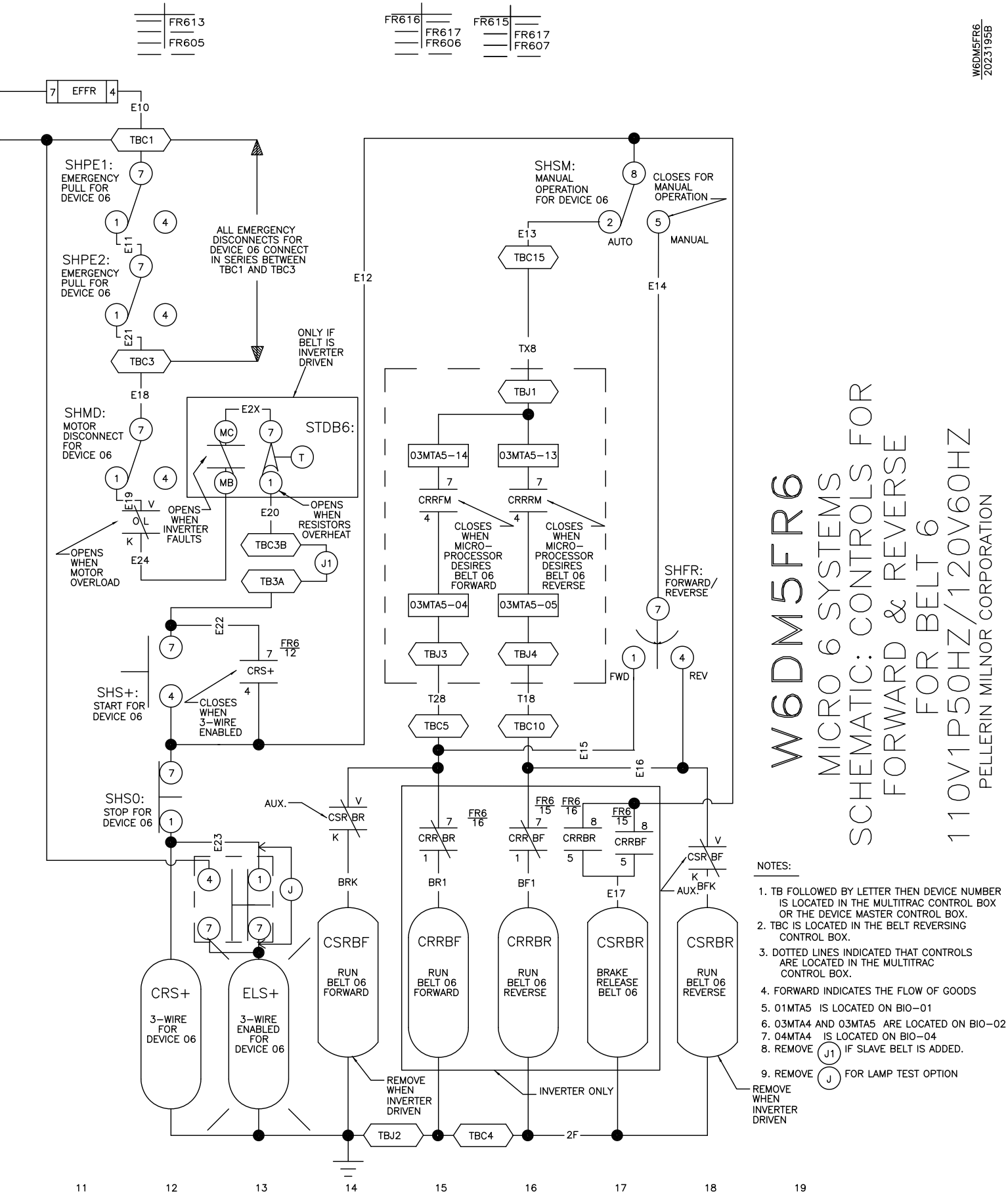

NOTES:

1. TB FOLLOWED BY LETTER THEN DEVICE NUMBER IS LOCATED IN THE MULTITRAC CONTROL BOX OR THE DEVICE MASTER CONTROL BOX.
2. TBC IS LOCATED IN THE BELT REVERSING CONTROL BOX.
3. DOTTED LINES INDICATED THAT CONTROLS ARE LOCATED IN THE MULTITRAC CONTROL BOX.
4. FORWARD INDICATES THE FLOW OF GOODS
5. 01MTA5 IS LOCATED ON BIO-01
6. 03MTA4 AND 03MTA5 ARE LOCATED ON BIO-02
7. 04MTA4 IS LOCATED ON BIO-04
8. REMOVE (J1) IF SLAVE BELT IS ADDED.
9. REMOVE (J) FOR LAMP TEST OPTION

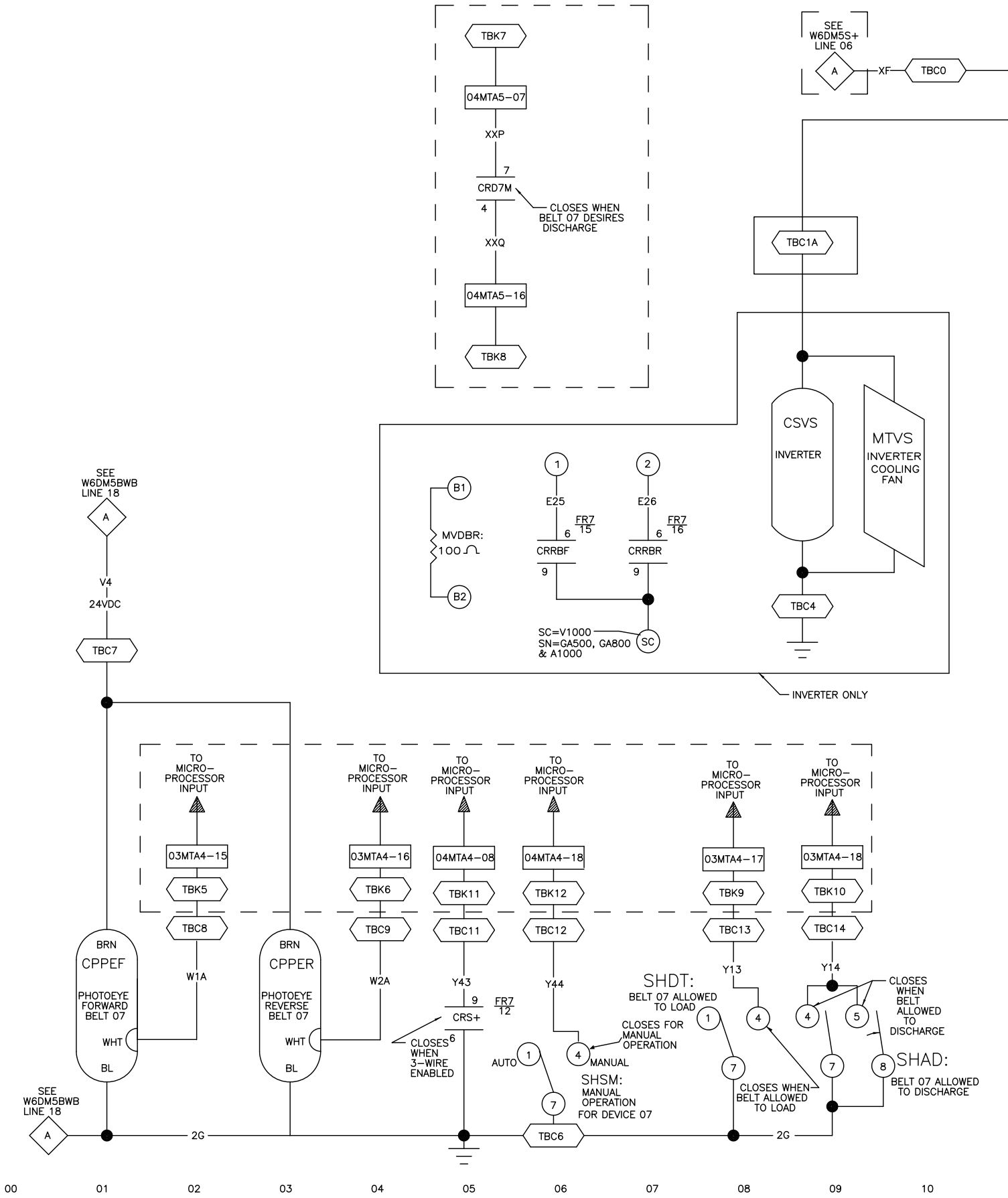

W6DM5FR7
2023195B

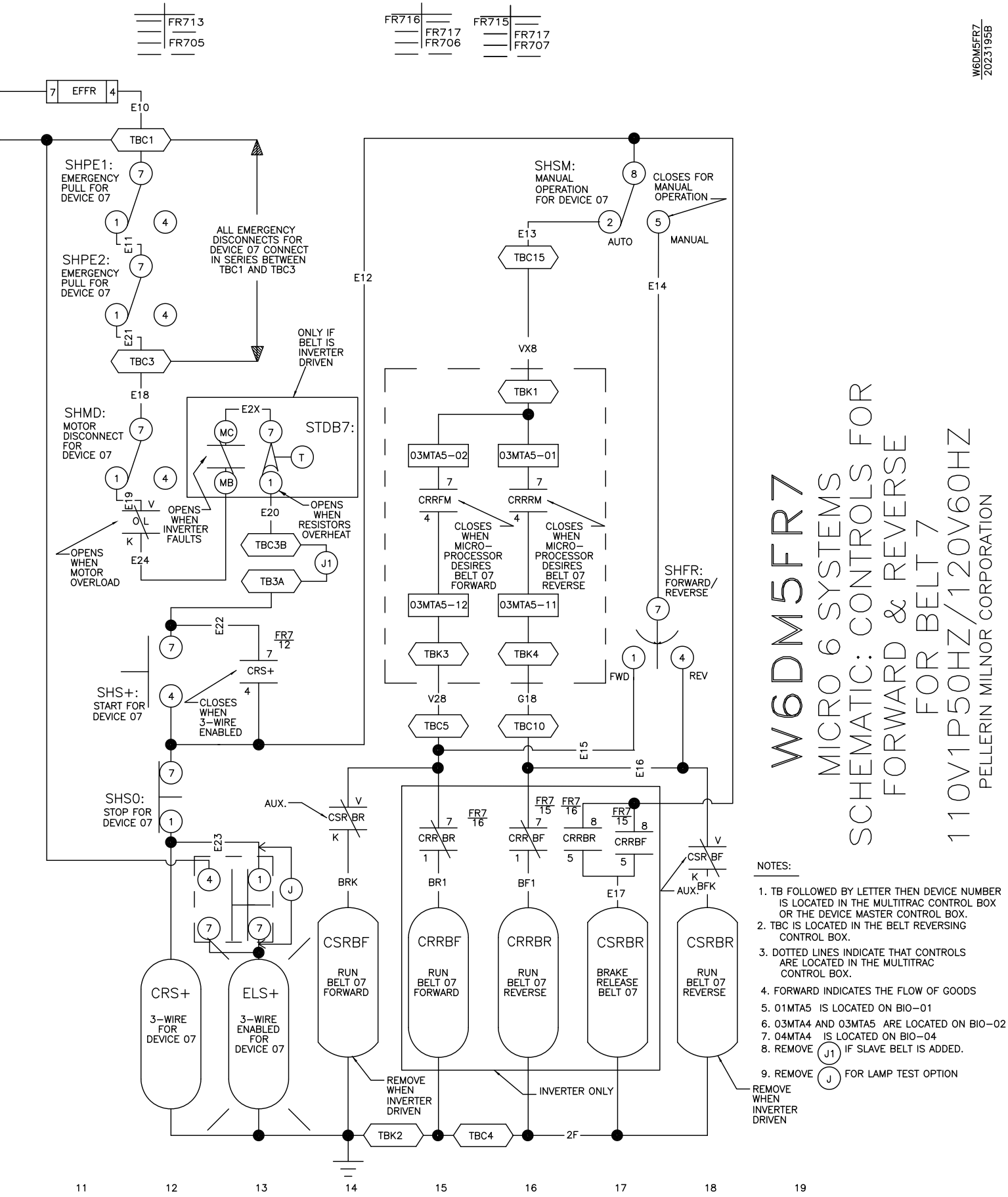

NOTES:

1. TB FOLLOWED BY LETTER THEN DEVICE NUMBER IS LOCATED IN THE MULTITRAC CONTROL BOX OR THE DEVICE MASTER CONTROL BOX.
2. TBC IS LOCATED IN THE BELT REVERSING CONTROL BOX.
3. DOTTED LINES INDICATE THAT CONTROLS ARE LOCATED IN THE MULTITRAC CONTROL BOX.
4. FORWARD INDICATES THE FLOW OF GOODS
5. 01MTA5 IS LOCATED ON BIO-01
6. 03MTA4 AND 03MTA5 ARE LOCATED ON BIO-02
7. 04MTA4 IS LOCATED ON BIO-04
8. REMOVE (J1) IF SLAVE BELT IS ADDED.
9. REMOVE (J) FOR LAMP TEST OPTION

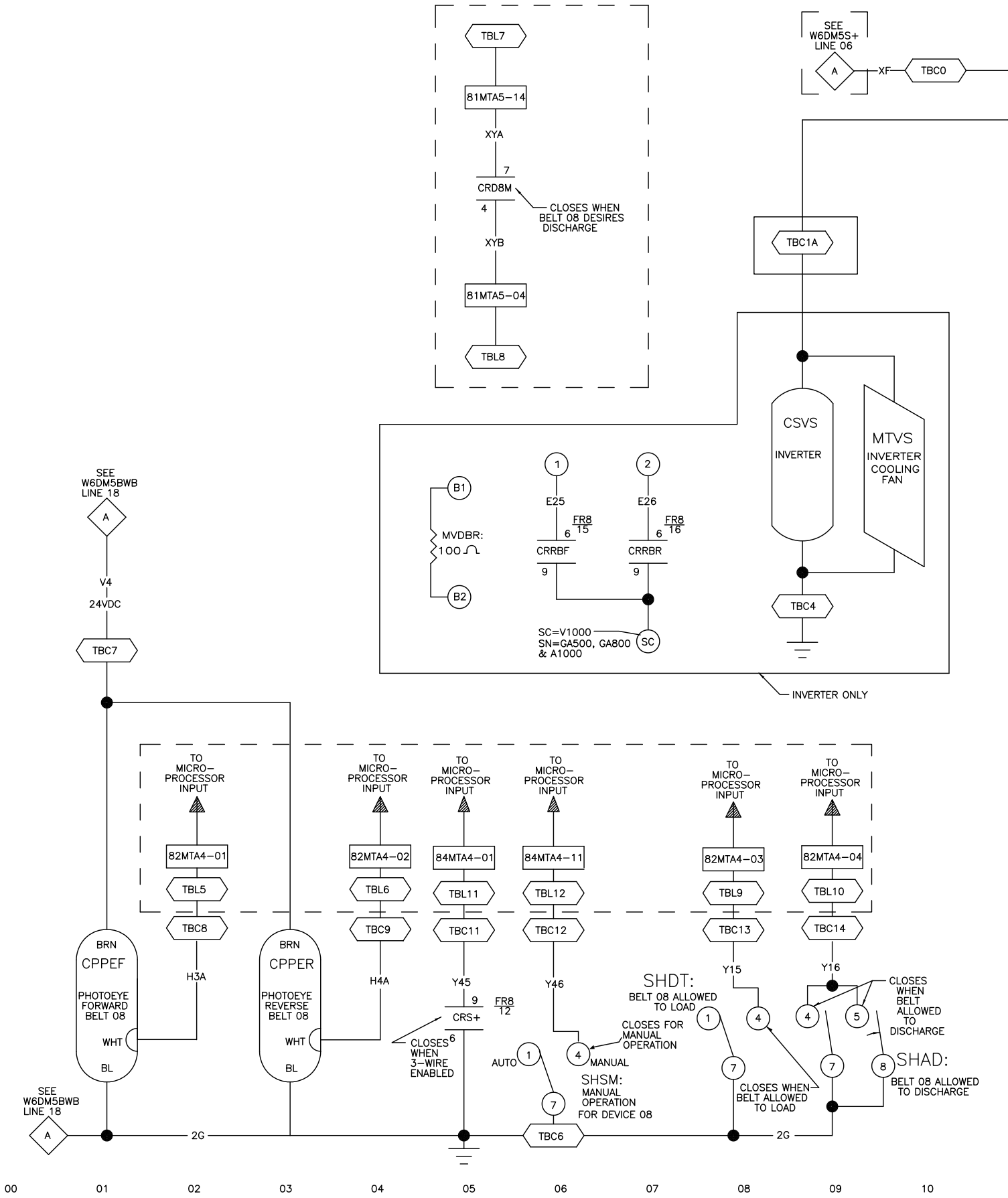

W6DM5FR8
2023195B

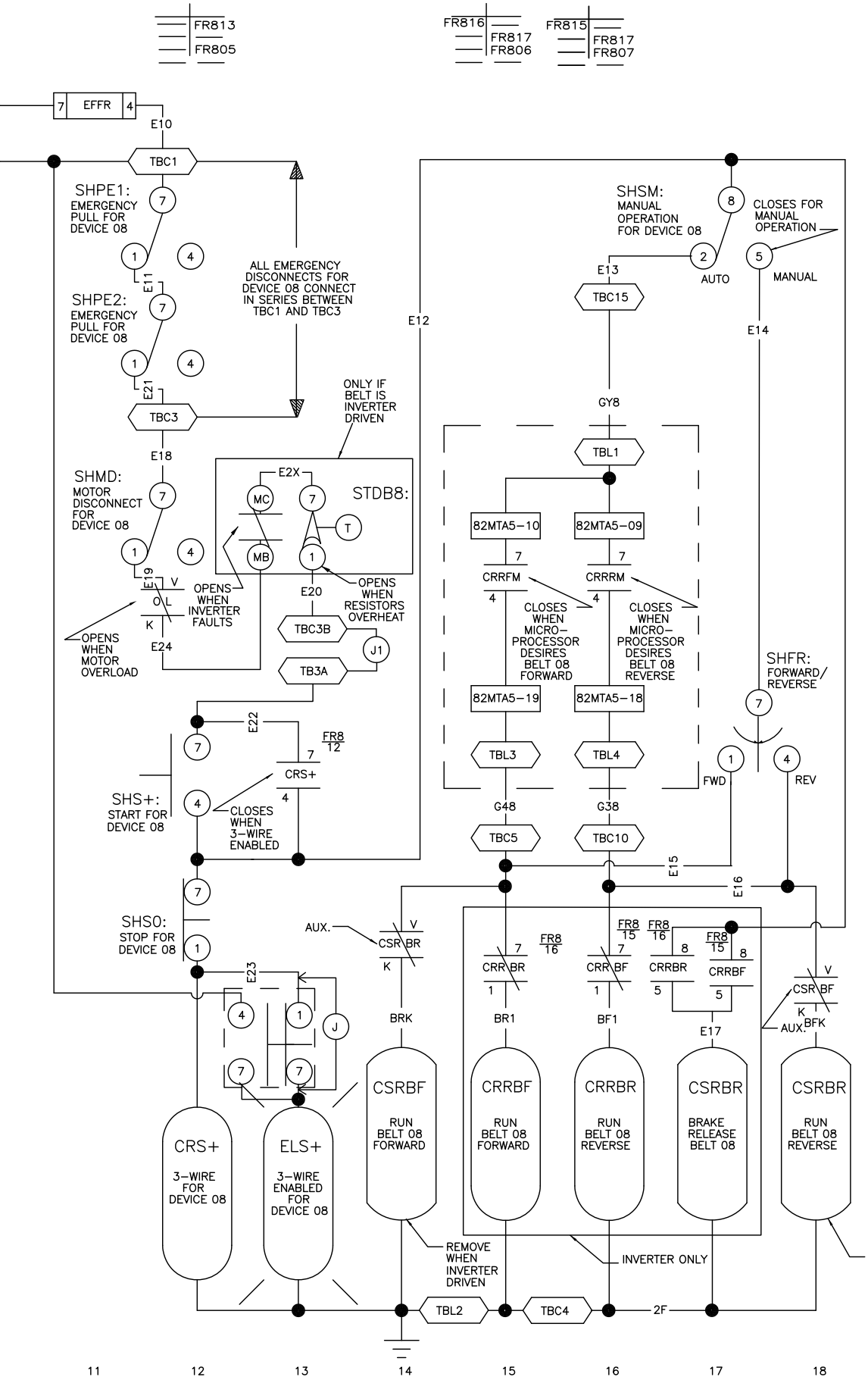

W6DM5FR8

MICRO 6 SYSTEMS SCHEMATIC: CONTROLS FOR FORWARD & REVERSE FOR BELT 8

110V1P50HZ/120V60HZ

PELLERIN MILNOR CORPORATION

NOTES:

1. TB FOLLOWED BY LETTER THEN DEVICE NUMBER IS LOCATED IN THE MULTITRAC CONTROL BOX OR THE DEVICE MASTER CONTROL BOX.
2. TBC IS LOCATED IN THE BELT REVERSING CONTROL BOX.
3. DOTTED LINES INDICATE THAT CONTROLS ARE LOCATED IN THE MULTITRAC CONTROL BOX.
4. FORWARD INDICATES THE FLOW OF GOODS
5. 81MTA5 IS LOCATED ON BIO–01
6. 82MTA4 AND 82MTA5 ARE LOCATED ON BIO–02
7. 84MTA4 IS LOCATED ON BIO–04
8. REMOVE (J1) IF SLAVE BELT IS ADDED.
9. REMOVE (J) FOR LAMP TEST OPTION

W6DM5FR8
2023195B

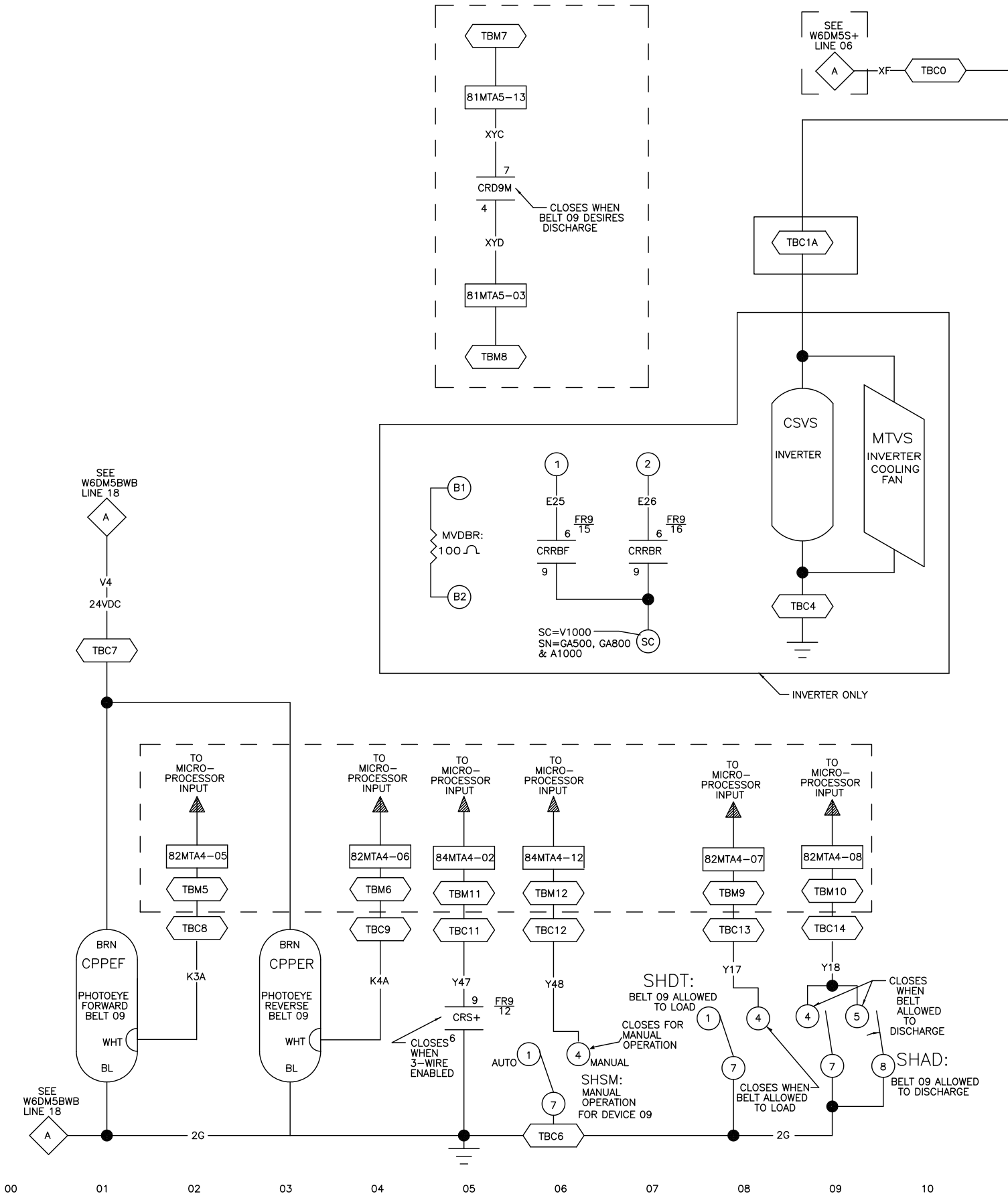

W6DM5FR9
2023195B

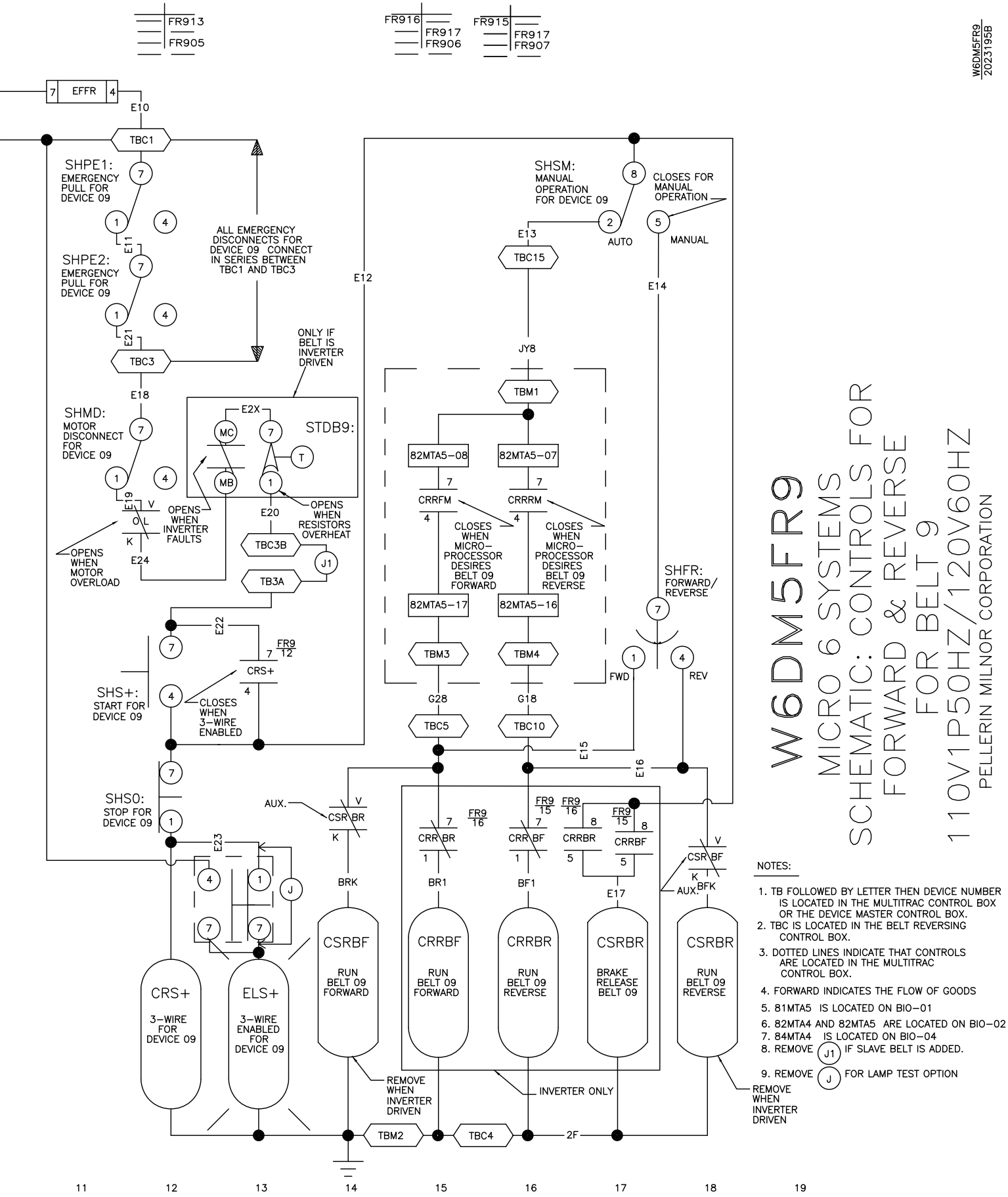
W6DM5FR9
MICRO 6 SYSTEMS
SCHEMATIC: CONTROLS FOR
FORWARD & REVERSE
FOR BELT 9
110V1P50HZ/120V60HZ
PELLERIN MILNOR CORPORATION
FR913
FR905
FR916
FR917
FR906
FR915
FR917
FR907
EFFR
E10
TBC1
SHPE1:
EMERGENCY PULL FOR DEVICE 09
SHPE2:
EMERGENCY PULL FOR DEVICE 09
ALL EMERGENCY DISCONNECTS FOR DEVICE 09 CONNECT IN SERIES BETWEEN TBC1 AND TBC3
TBC3
ONLY IF BELT IS INVERTER DRIVEN
SHMD:
MOTOR DISCONNECT FOR DEVICE 09
STDB9:
OPENS WHEN INVERTER FAULTS
OPENS WHEN RESISTORS OVERHEAT
OPENS WHEN MOTOR OVERLOAD
TBC3B
TB3A
SHS+:
START FOR DEVICE 09
CLOSES WHEN 3-WIRE ENABLED
CRS+
SHS0:
STOP FOR DEVICE 09
SHSM:
MANUAL OPERATION FOR DEVICE 09
CLOSES FOR MANUAL OPERATION
AUTO
MANUAL
TBC15
TBM1
82MTA5-08
82MTA5-07
CRRFM
CRRRM
CLOSES WHEN MICRO-PROCESSOR DESIRES BELT 09 FORWARD
CLOSES WHEN MICRO-PROCESSOR DESIRES BELT 09 REVERSE
82MTA5-17
82MTA5-16
TBM3
TBM4
TBC5
TBC10
SHFR:
FORWARD/REVERSE
FWD
REV
CSR BR
CRR BR
CRR BF
CRRBR
CRRBF
CSR BF
CRS+
3-WIRE FOR DEVICE 09
ELS+
3-WIRE ENABLED FOR DEVICE 09
CSRBF
RUN BELT 09 FORWARD
CRRBF
RUN BELT 09 FORWARD
CRRBR
RUN BELT 09 REVERSE
CSRBR
BRAKE RELEASE BELT 09
CSRBR
RUN BELT 09 REVERSE
REMOVE WHEN INVERTER DRIVEN
INVERTER ONLY
TBM2
TBC4
NOTES:
1. TB FOLLOWED BY LETTER THEN DEVICE NUMBER IS LOCATED IN THE MULTITRAC CONTROL BOX OR THE DEVICE MASTER CONTROL BOX.
2. TBC IS LOCATED IN THE BELT REVERSING CONTROL BOX.
3. DOTTED LINES INDICATE THAT CONTROLS ARE LOCATED IN THE MULTITRAC CONTROL BOX.
4. FORWARD INDICATES THE FLOW OF GOODS
5. 81MTA5 IS LOCATED ON BIO-01
6. 82MTA4 AND 82MTA5 ARE LOCATED ON BIO-02
7. 84MTA4 IS LOCATED ON BIO-04
8. REMOVE J1 IF SLAVE BELT IS ADDED.
9. REMOVE J FOR LAMP TEST OPTION
W6DM5FR9
2023195B

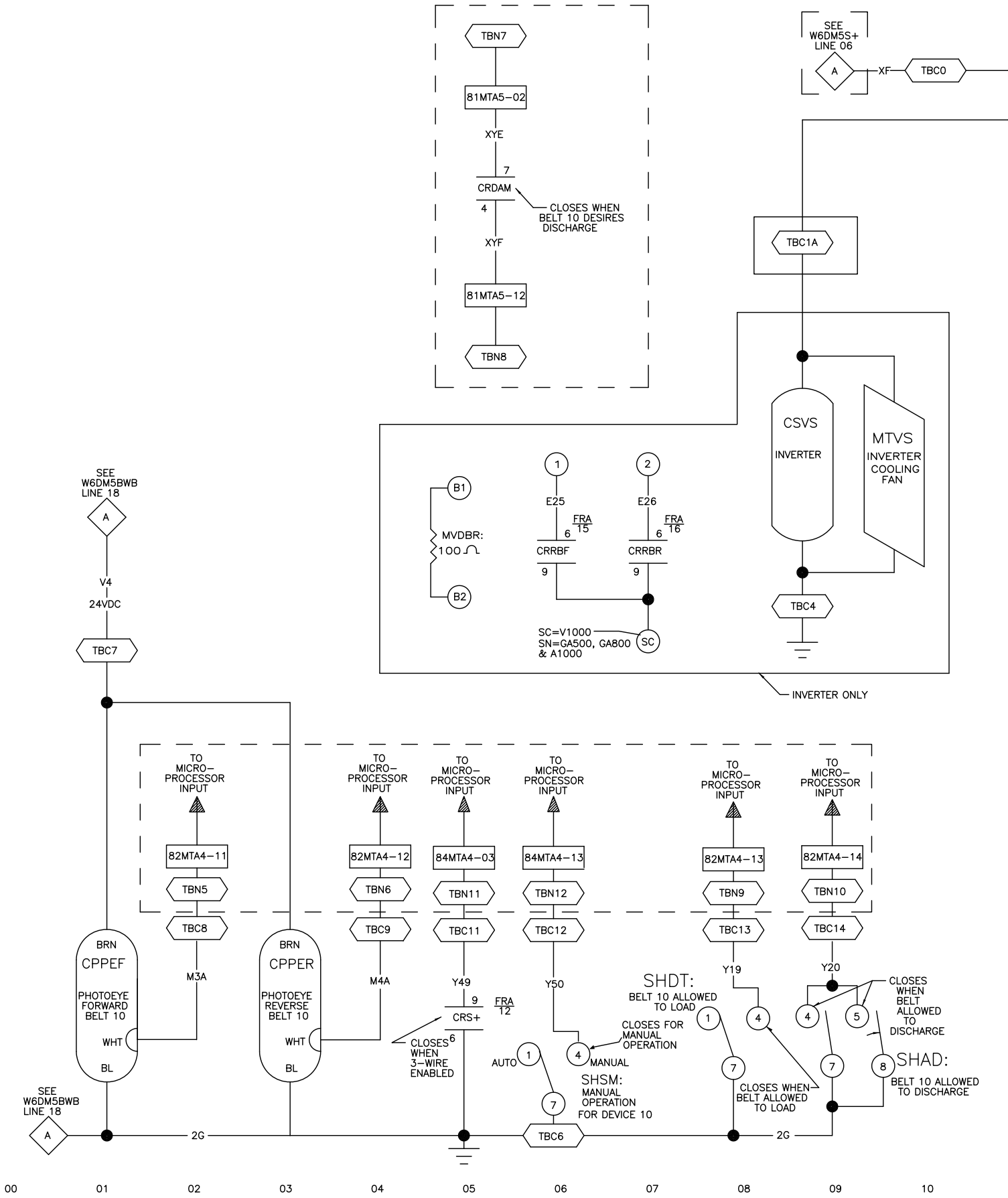

W6DM5FRA
2023195B

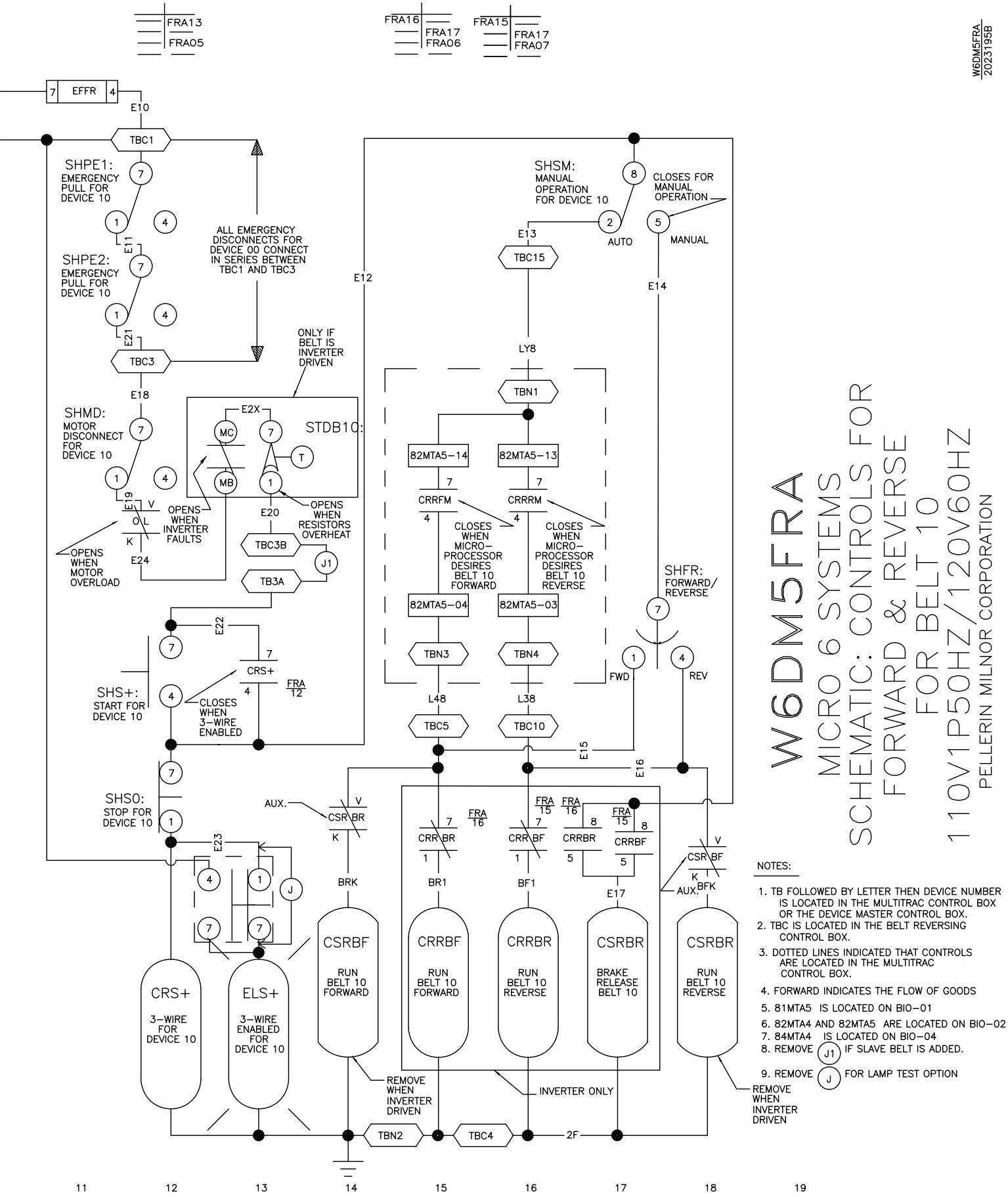
W6DM5FRA
2023195B
FRA13
FRA05
FRA16
FRA17
FRA06
FRA15
FRA17
FRA07
EFFR
E10
TBC1
SHPE1:
EMERGENCY PULL FOR DEVICE 10
E11
SHPE2:
EMERGENCY PULL FOR DEVICE 10
E21
TBC3
ALL EMERGENCY DISCONNECTS FOR DEVICE 00 CONNECT IN SERIES BETWEEN TBC1 AND TBC3
E12
E18
SHMD:
MOTOR DISCONNECT FOR DEVICE 10
E19
OPENS WHEN MOTOR OVERLOAD
E24
ONLY IF BELT IS INVERTER DRIVEN
E2X
STDB10:
MC
MB
T
OPENS WHEN INVERTER FAULTS
E20
OPENS WHEN RESISTORS OVERHEAT
TBC3B
J1
TB3A
E22
CRS+
FRA 12
SHS+:
START FOR DEVICE 10
CLOSES WHEN 3-WIRE ENABLED
SHS0:
STOP FOR DEVICE 10
E23
AUX.
CSR BR
BRK
CRS+
3-WIRE FOR DEVICE 10
ELS+
3-WIRE ENABLED FOR DEVICE 10
CSRBF
RUN BELT 10 FORWARD
REMOVE WHEN INVERTER DRIVEN
SHSM:
MANUAL OPERATION FOR DEVICE 10
CLOSES FOR MANUAL OPERATION
AUTO
MANUAL
E13
E14
TBC15
LY8
TBN1
82MTA5-14
82MTA5-13
CRRFM
CRRRM
CLOSES WHEN MICRO-PROCESSOR DESIRES BELT 10 FORWARD
CLOSES WHEN MICRO-PROCESSOR DESIRES BELT 10 REVERSE
82MTA5-04
82MTA5-03
TBN3
TBN4
L48
L38
TBC5
TBC10
E15
E16
SHFR:
FORWARD/ REVERSE
FWD
REV
FRA 16
FRA 15
CRR BR
CRR BF
CRRBR
CRRBF
BR1
BF1
E17
CSR BF
BFK
CRRBF
RUN BELT 10 FORWARD
CRRBR
RUN BELT 10 REVERSE
CSRBR
BRAKE RELEASE BELT 10
CSRBR
RUN BELT 10 REVERSE
INVERTER ONLY
REMOVE WHEN INVERTER DRIVEN
TBN2
TBC4
2F
11
12
13
14
15
16
17
18
19
W6DM5FRA
MICRO 6 SYSTEMS
SCHEMATIC: CONTROLS FOR
FORWARD & REVERSE
FOR BELT 10
110V1P50HZ/120V60HZ
PELLERIN MILNOR CORPORATION
NOTES:
1. TB FOLLOWED BY LETTER THEN DEVICE NUMBER IS LOCATED IN THE MULTITRAC CONTROL BOX OR THE DEVICE MASTER CONTROL BOX.
2. TBC IS LOCATED IN THE BELT REVERSING CONTROL BOX.
3. DOTTED LINES INDICATED THAT CONTROLS ARE LOCATED IN THE MULTITRAC CONTROL BOX.
4. FORWARD INDICATES THE FLOW OF GOODS
5. 81MTA5 IS LOCATED ON BIO-01
6. 82MTA4 AND 82MTA5 ARE LOCATED ON BIO-02
7. 84MTA4 IS LOCATED ON BIO-04
8. REMOVE J1 IF SLAVE BELT IS ADDED.
9. REMOVE J FOR LAMP TEST OPTION
W6DM5FRA
2023195B

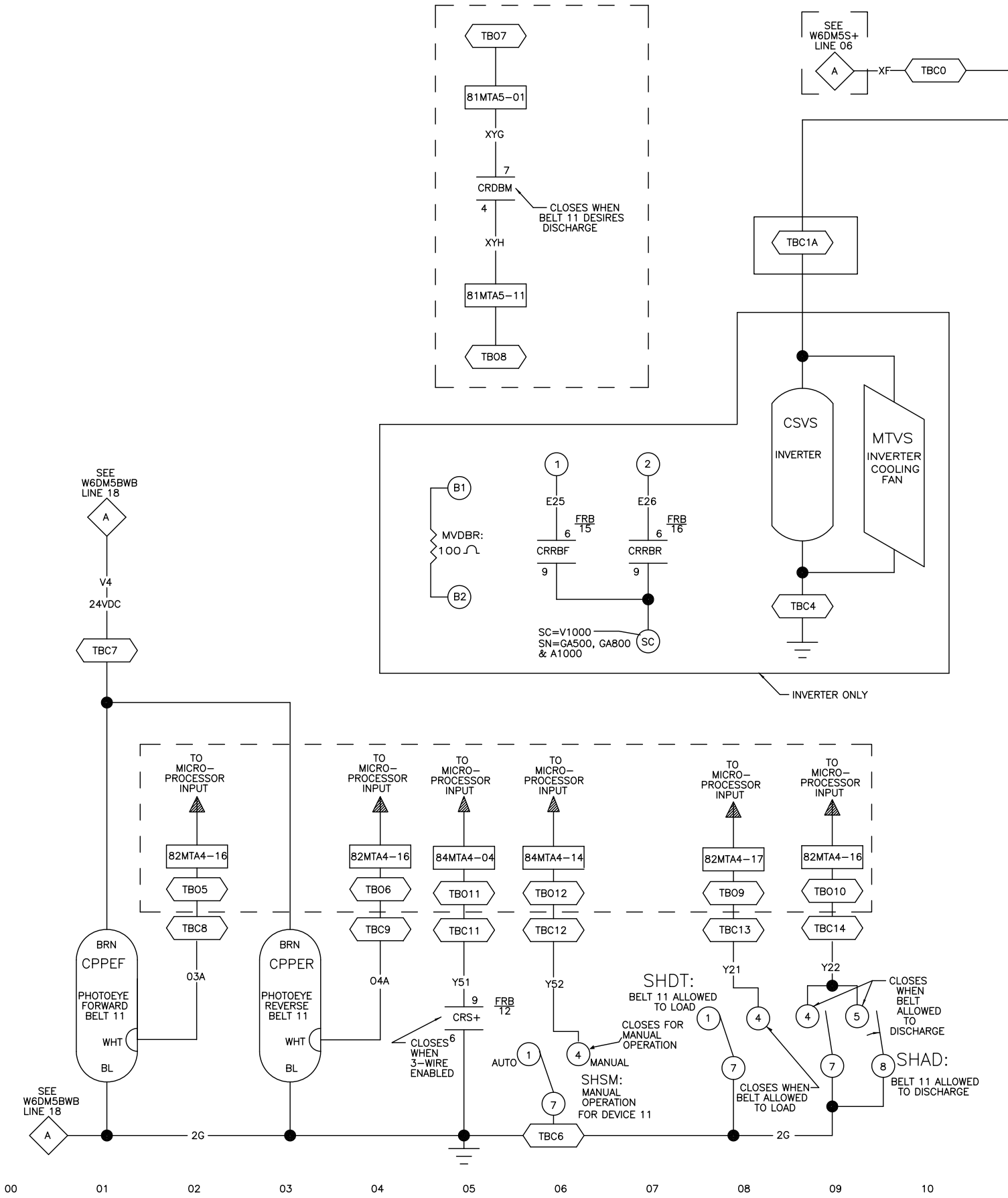

W6DM5FRB
2023195B

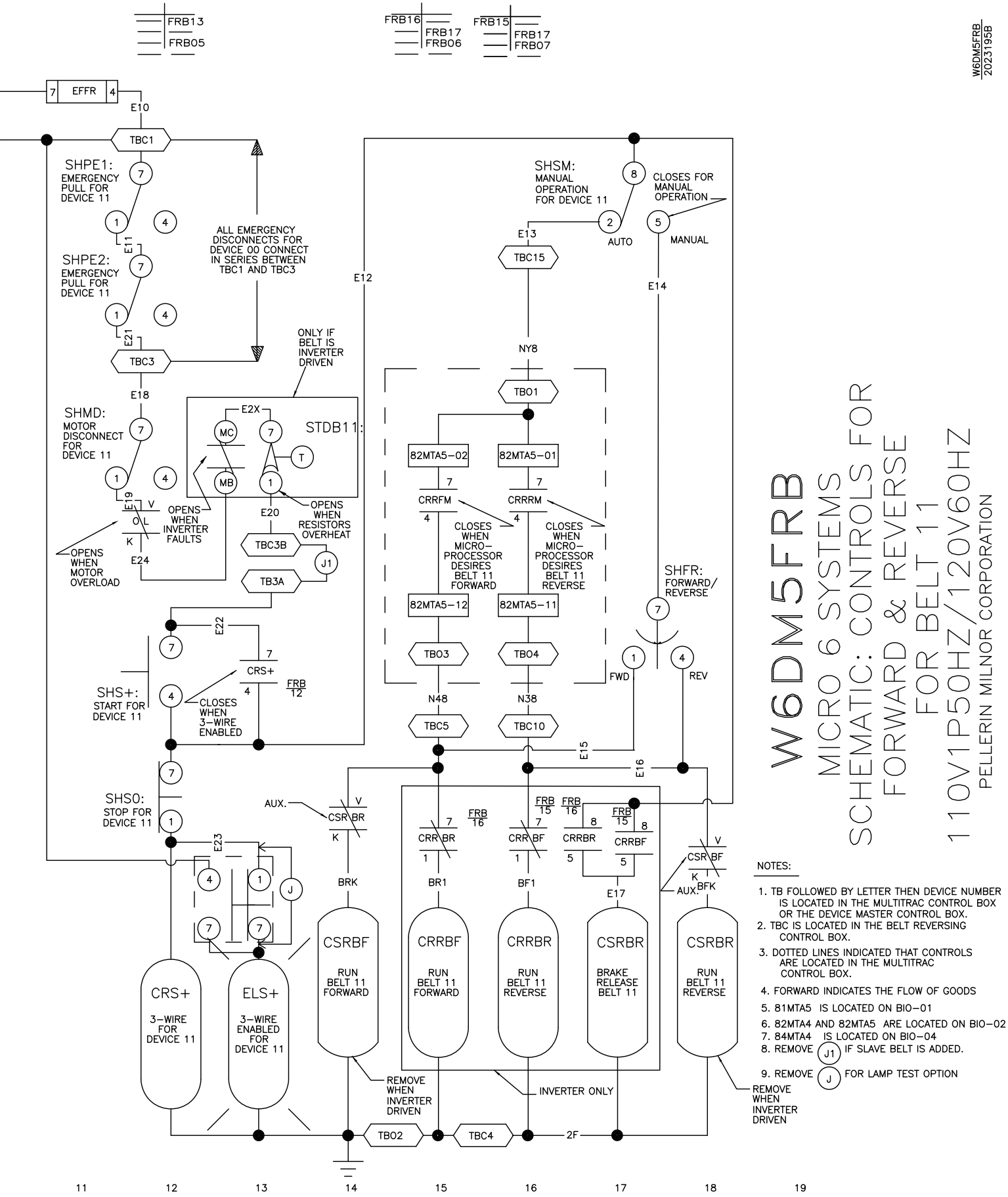

W6DM5FRB
MICRO 6 SYSTEMS SCHEMATIC: CONTROLS FOR FORWARD & REVERSE FOR BELT 11
110V1P50HZ/120V60HZ
PELLERIN MILNOR CORPORATION

NOTES:

1. TB FOLLOWED BY LETTER THEN DEVICE NUMBER IS LOCATED IN THE MULTITRAC CONTROL BOX OR THE DEVICE MASTER CONTROL BOX.
2. TBC IS LOCATED IN THE BELT REVERSING CONTROL BOX.
3. DOTTED LINES INDICATED THAT CONTROLS ARE LOCATED IN THE MULTITRAC CONTROL BOX.
4. FORWARD INDICATES THE FLOW OF GOODS
5. 81MTA5 IS LOCATED ON BIO-01
6. 82MTA4 AND 82MTA5 ARE LOCATED ON BIO-02
7. 84MTA4 IS LOCATED ON BIO-04
8. REMOVE (J1) IF SLAVE BELT IS ADDED.
9. REMOVE (J) FOR LAMP TEST OPTION

W6DM5FRB
2023195B

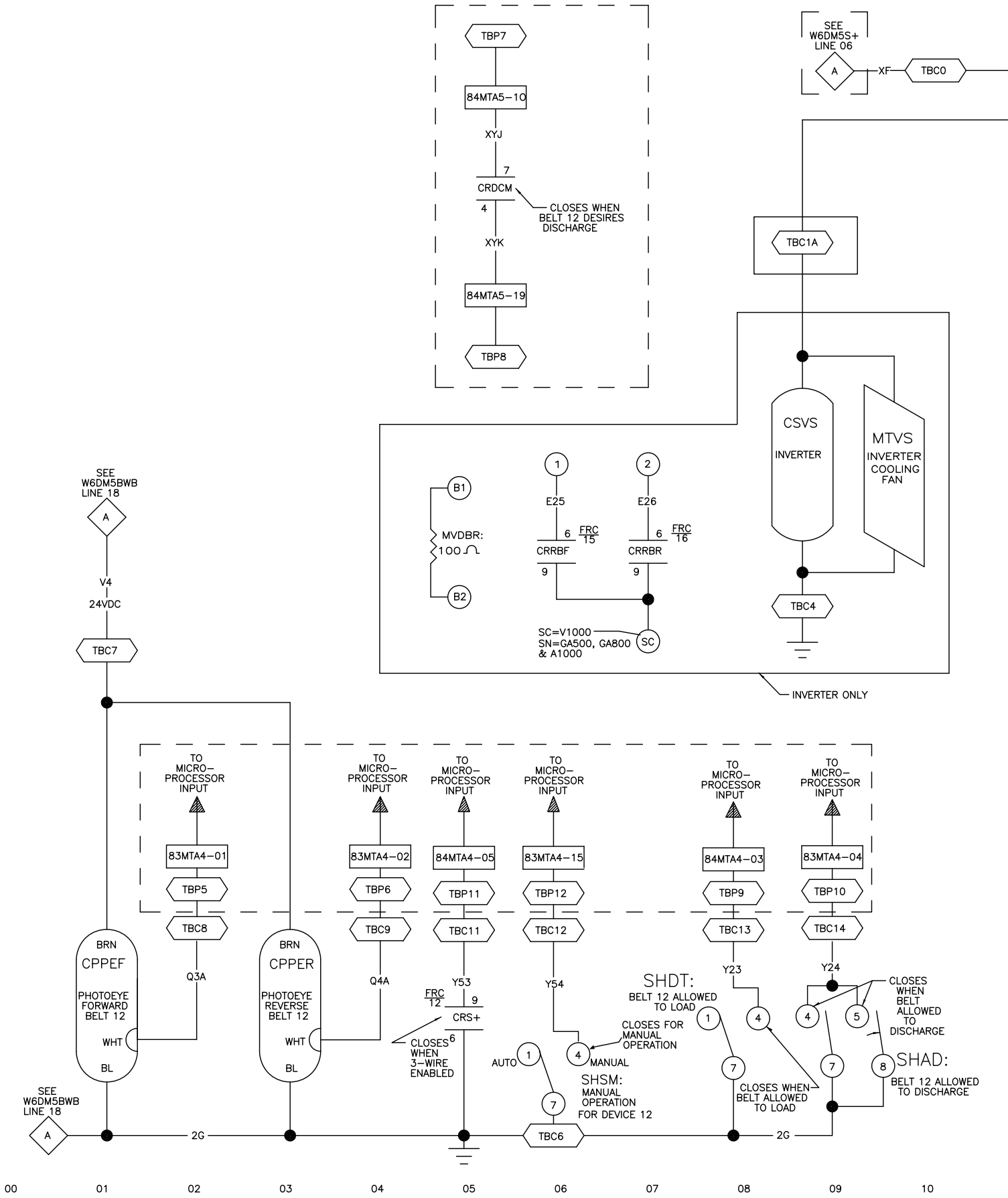

W6DM5FRC
2023195B

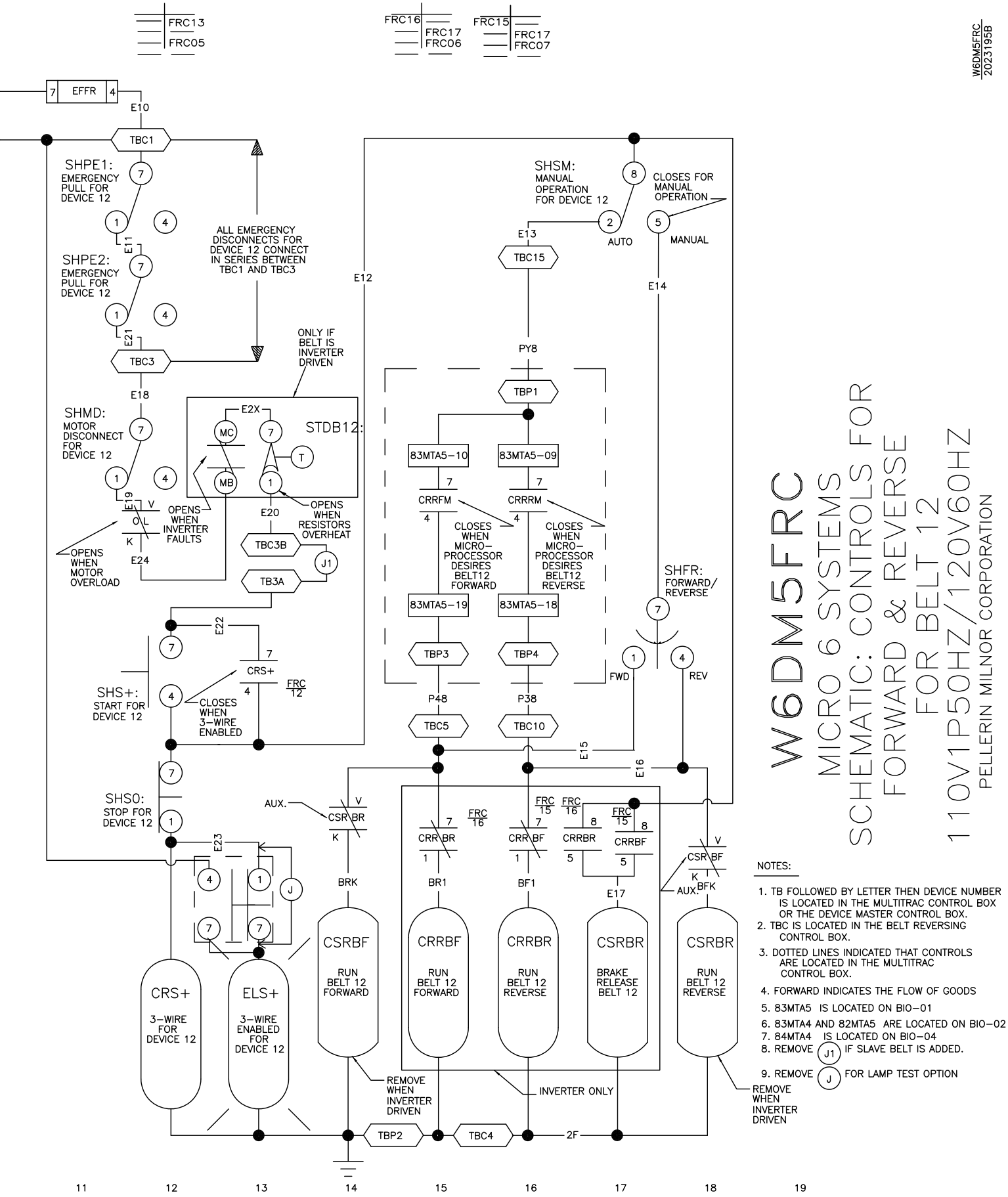

W6DM5FRC

MICRO 6 SYSTEMS SCHEMATIC: CONTROLS FOR FORWARD & REVERSE FOR BELT 12

110V1P50HZ/120V60HZ

PELLERIN MILNOR CORPORATION

NOTES:

1. TB FOLLOWED BY LETTER THEN DEVICE NUMBER IS LOCATED IN THE MULTITRAC CONTROL BOX OR THE DEVICE MASTER CONTROL BOX.
2. TBC IS LOCATED IN THE BELT REVERSING CONTROL BOX.
3. DOTTED LINES INDICATED THAT CONTROLS ARE LOCATED IN THE MULTITRAC CONTROL BOX.
4. FORWARD INDICATES THE FLOW OF GOODS
5. 83MTA5 IS LOCATED ON BIO-01
6. 83MTA4 AND 82MTA5 ARE LOCATED ON BIO-02
7. 84MTA4 IS LOCATED ON BIO-04
8. REMOVE (J1) IF SLAVE BELT IS ADDED.
9. REMOVE (J) FOR LAMP TEST OPTION

W6DM5FRC
2023195B

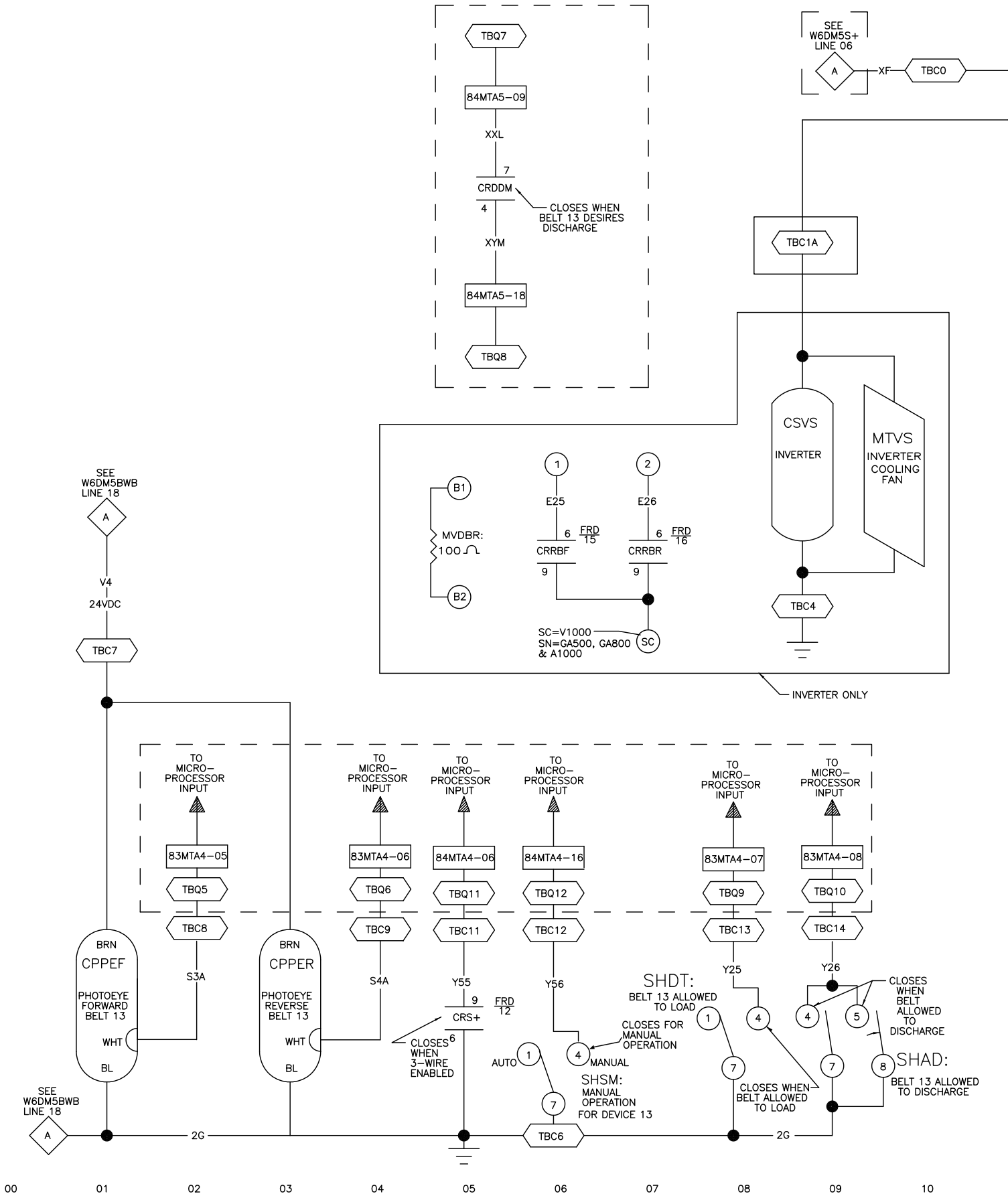

W6DM5FRD
2023195B

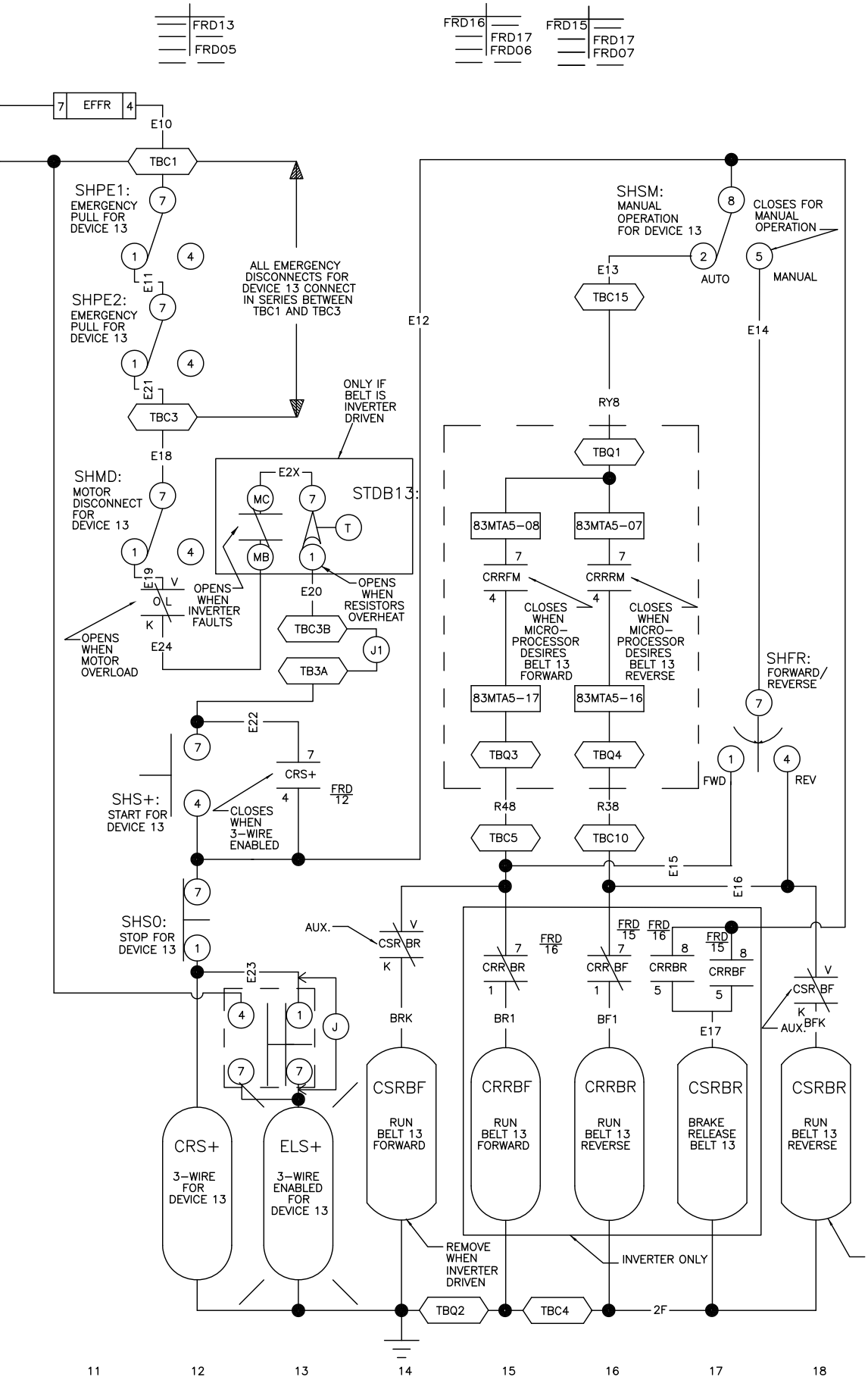

W6DM5FRD

MICRO 6 SYSTEMS SCHEMATIC: CONTROLS FOR FORWARD & REVERSE FOR BELT 13

110V1P50HZ/120V60HZ

PELLERIN MILNOR CORPORATION

NOTES:

1. TB FOLLOWED BY LETTER THEN DEVICE NUMBER IS LOCATED IN THE MULTITRAC CONTROL BOX OR THE DEVICE MASTER CONTROL BOX.
2. TBC IS LOCATED IN THE BELT REVERSING CONTROL BOX.
3. DOTTED LINES INDICATED THAT CONTROLS ARE LOCATED IN THE MULTITRAC CONTROL BOX.
4. FORWARD INDICATES THE FLOW OF GOODS
5. 83MTA5 IS LOCATED ON BIO-01
6. 83MTA4 AND 83MTA5 ARE LOCATED ON BIO-02
7. 84MTA4 IS LOCATED ON BIO-04
8. REMOVE (J1) IF SLAVE BELT IS ADDED.
9. REMOVE (J) FOR LAMP TEST OPTION

W6DM5FRD
2023195B

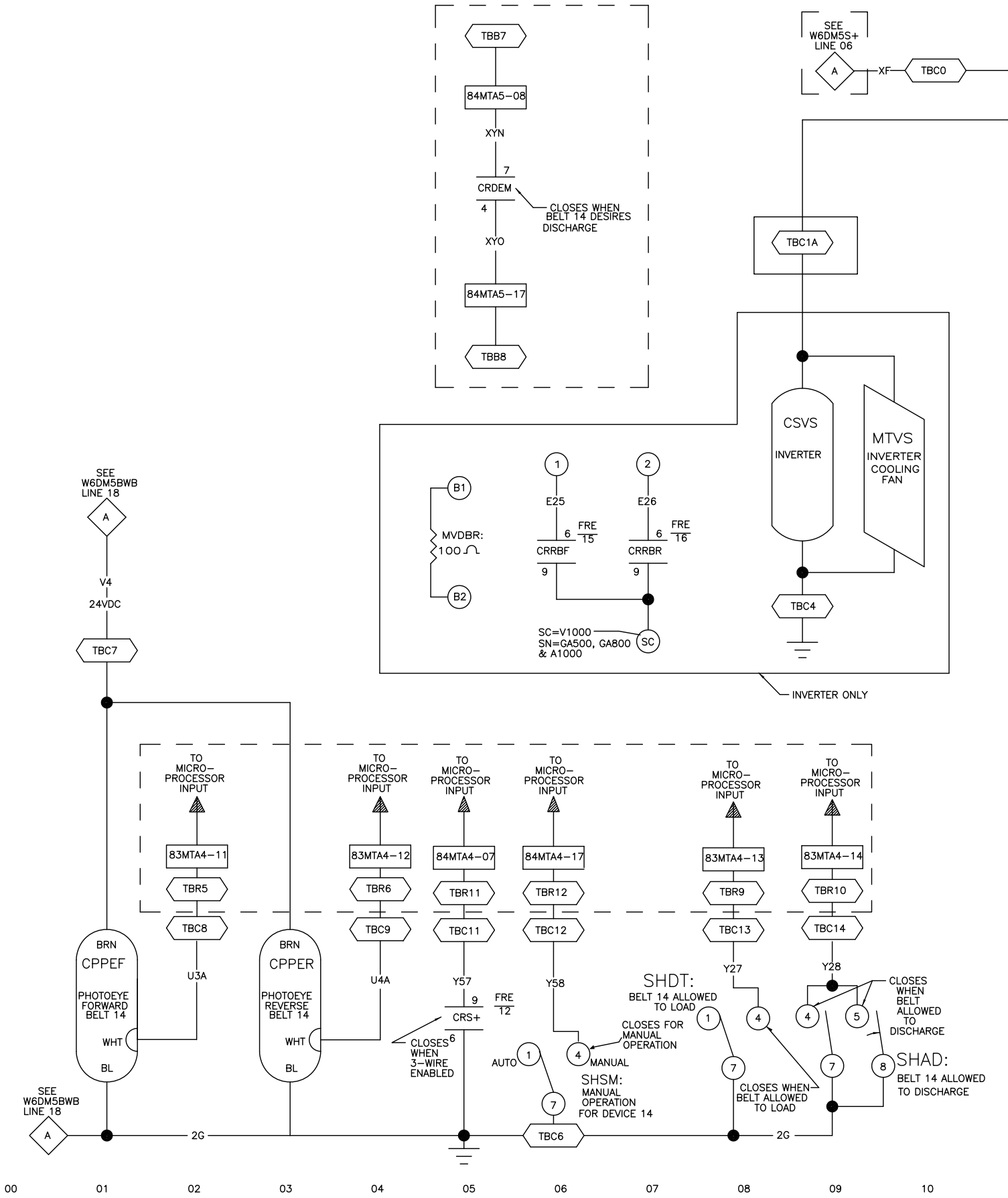

W6DM5FRE
2023195B

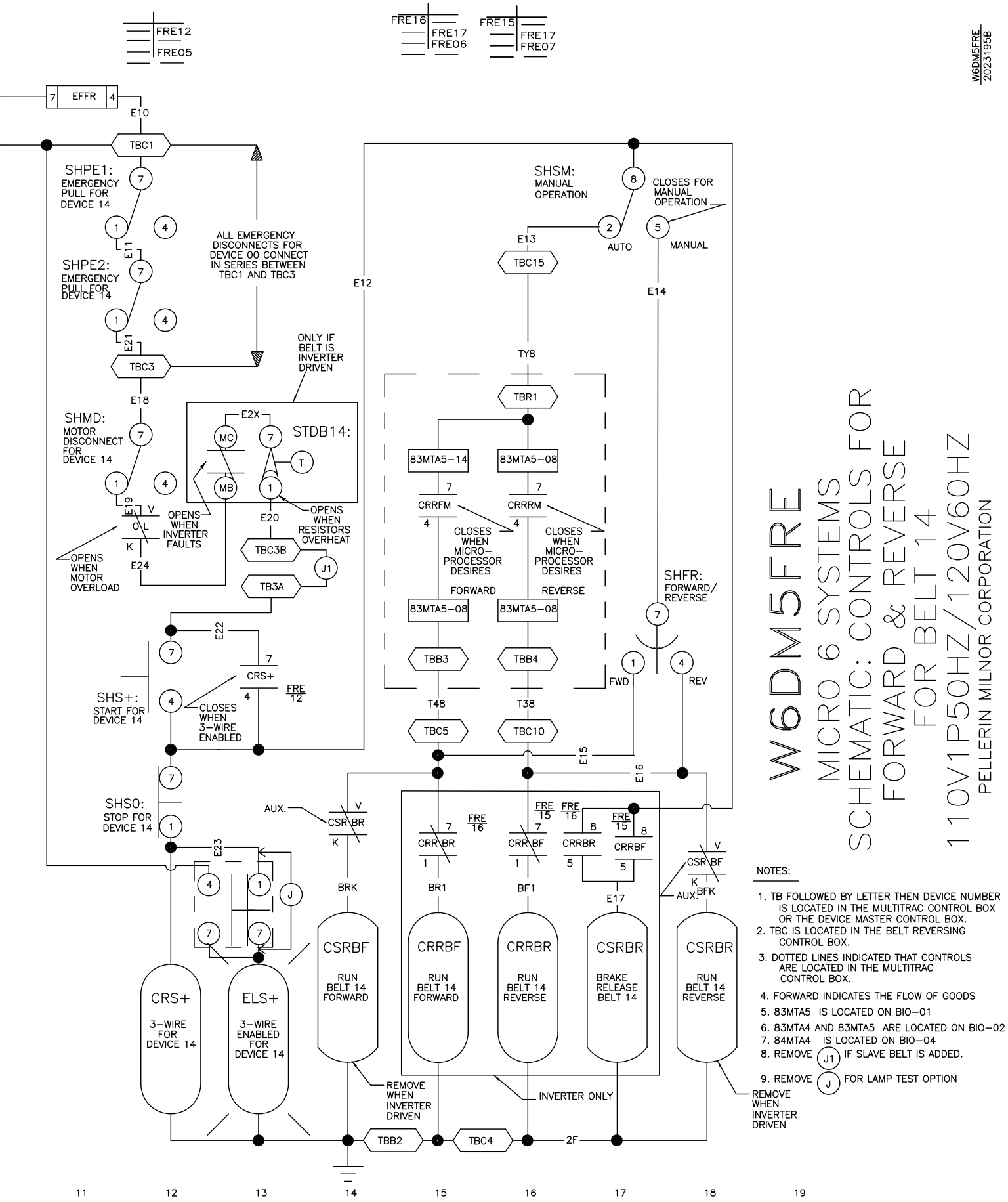

NOTES:

1. TB FOLLOWED BY LETTER THEN DEVICE NUMBER IS LOCATED IN THE MULTITRAC CONTROL BOX OR THE DEVICE MASTER CONTROL BOX.
2. TBC IS LOCATED IN THE BELT REVERSING CONTROL BOX.
3. DOTTED LINES INDICATED THAT CONTROLS ARE LOCATED IN THE MULTITRAC CONTROL BOX.
4. FORWARD INDICATES THE FLOW OF GOODS
5. 83MTA5 IS LOCATED ON BIO-01
6. 83MTA4 AND 83MTA5 ARE LOCATED ON BIO-02
7. 84MTA4 IS LOCATED ON BIO-04
8. REMOVE (J1) IF SLAVE BELT IS ADDED.
9. REMOVE (J) FOR LAMP TEST OPTION

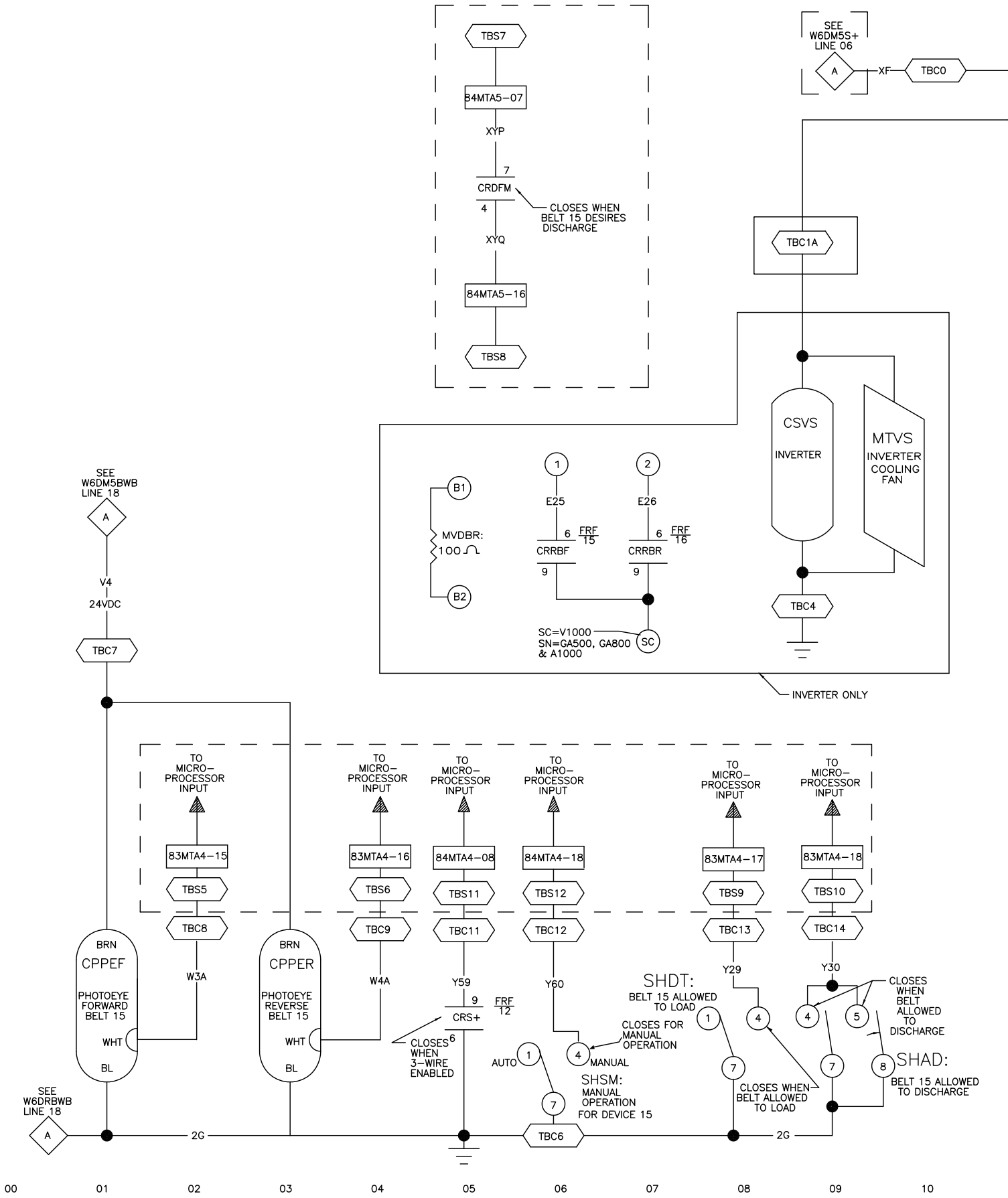

W6DM5FRF
2023195B

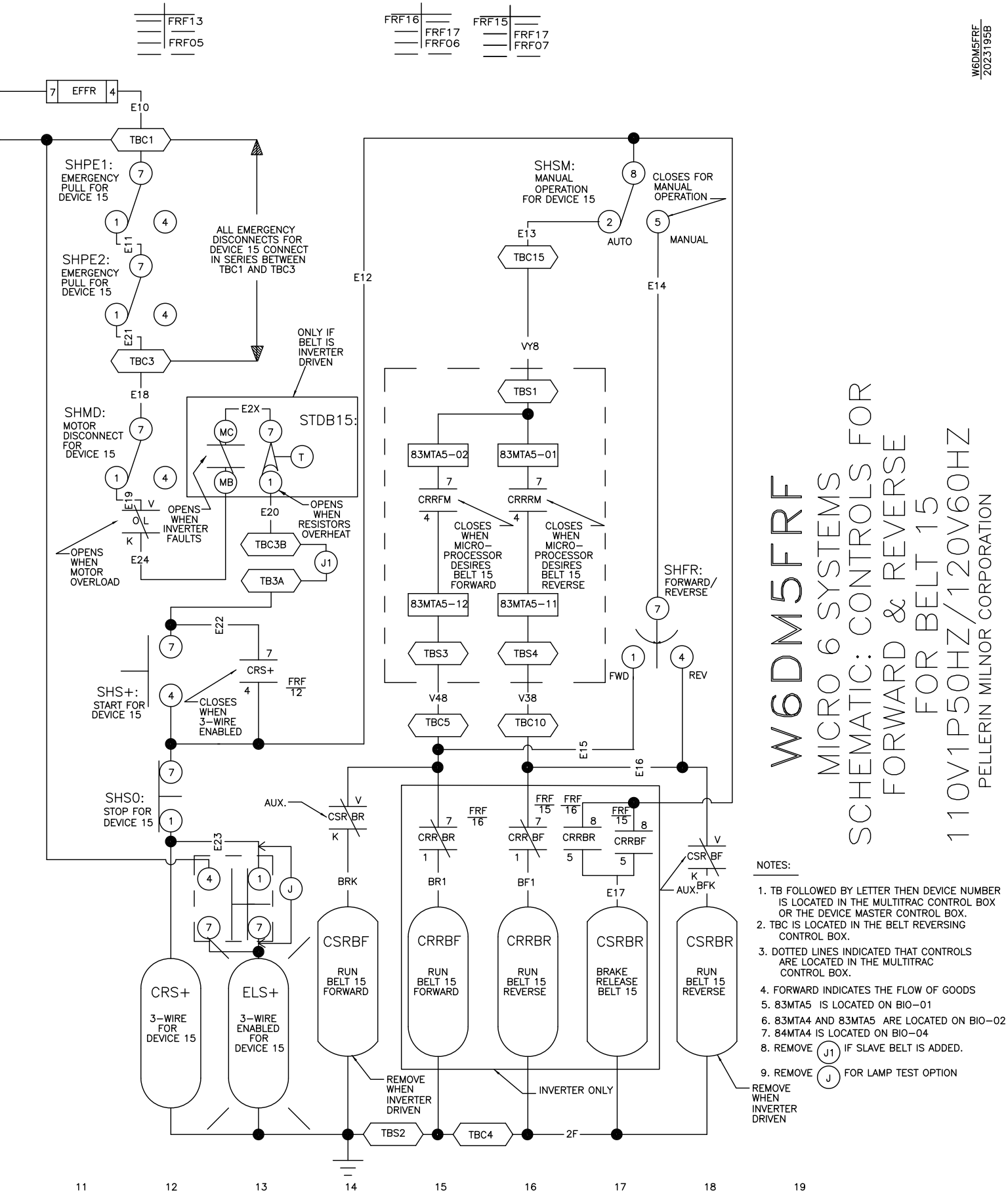
W6DM5FRF
MICRO 6 SYSTEMS
SCHEMATIC: CONTROLS FOR
FORWARD & REVERSE
FOR BELT 15
110V1P50HZ/120V60HZ
PELLERIN MILNOR CORPORATION
FRF13
FRF05
FRF16
FRF17
FRF06
FRF15
FRF17
FRF07
EFFR
E10
TBC1
SHPE1:
EMERGENCY PULL FOR DEVICE 15
SHPE2:
EMERGENCY PULL FOR DEVICE 15
ALL EMERGENCY DISCONNECTS FOR DEVICE 15 CONNECT IN SERIES BETWEEN TBC1 AND TBC3
TBC3
ONLY IF BELT IS INVERTER DRIVEN
SHMD:
MOTOR DISCONNECT FOR DEVICE 15
STDB15:
OPENS WHEN INVERTER FAULTS
OPENS WHEN RESISTORS OVERHEAT
OPENS WHEN MOTOR OVERLOAD
TBC3B
TB3A
SHS+:
START FOR DEVICE 15
CLOSES WHEN 3-WIRE ENABLED
SHS0:
STOP FOR DEVICE 15
SHSM:
MANUAL OPERATION FOR DEVICE 15
CLOSES FOR MANUAL OPERATION
AUTO
MANUAL
TBC15
TBS1
83MTA5-02
83MTA5-01
CRRFM
CRRRM
CLOSES WHEN MICRO-PROCESSOR DESIRES BELT 15 FORWARD
CLOSES WHEN MICRO-PROCESSOR DESIRES BELT 15 REVERSE
83MTA5-12
83MTA5-11
TBS3
TBS4
SHFR:
FORWARD/ REVERSE
FWD
REV
TBC5
TBC10
CRS+
FRF 12
CSR BR
CRR BR
CRR BF
CRRBR
CRRBF
CSR BF
BRK
BR1
BF1
BFK
CSRBF
RUN BELT 15 FORWARD
CRRBF
RUN BELT 15 FORWARD
CRRBR
RUN BELT 15 REVERSE
CSRBR
BRAKE RELEASE BELT 15
CSRBR
RUN BELT 15 REVERSE
CRS+
3-WIRE FOR DEVICE 15
ELS+
3-WIRE ENABLED FOR DEVICE 15
REMOVE WHEN INVERTER DRIVEN
INVERTER ONLY
TBS2
TBC4
2F
NOTES:
1. TB FOLLOWED BY LETTER THEN DEVICE NUMBER IS LOCATED IN THE MULTITRAC CONTROL BOX OR THE DEVICE MASTER CONTROL BOX.
2. TBC IS LOCATED IN THE BELT REVERSING CONTROL BOX.
3. DOTTED LINES INDICATED THAT CONTROLS ARE LOCATED IN THE MULTITRAC CONTROL BOX.
4. FORWARD INDICATES THE FLOW OF GOODS
5. 83MTA5 IS LOCATED ON BIO-01
6. 83MTA4 AND 83MTA5 ARE LOCATED ON BIO-02
7. 84MTA4 IS LOCATED ON BIO-04
8. REMOVE J1 IF SLAVE BELT IS ADDED.
9. REMOVE J FOR LAMP TEST OPTION
11 12 13 14 15 16 17 18 19
W6DM5FRF
2023195B

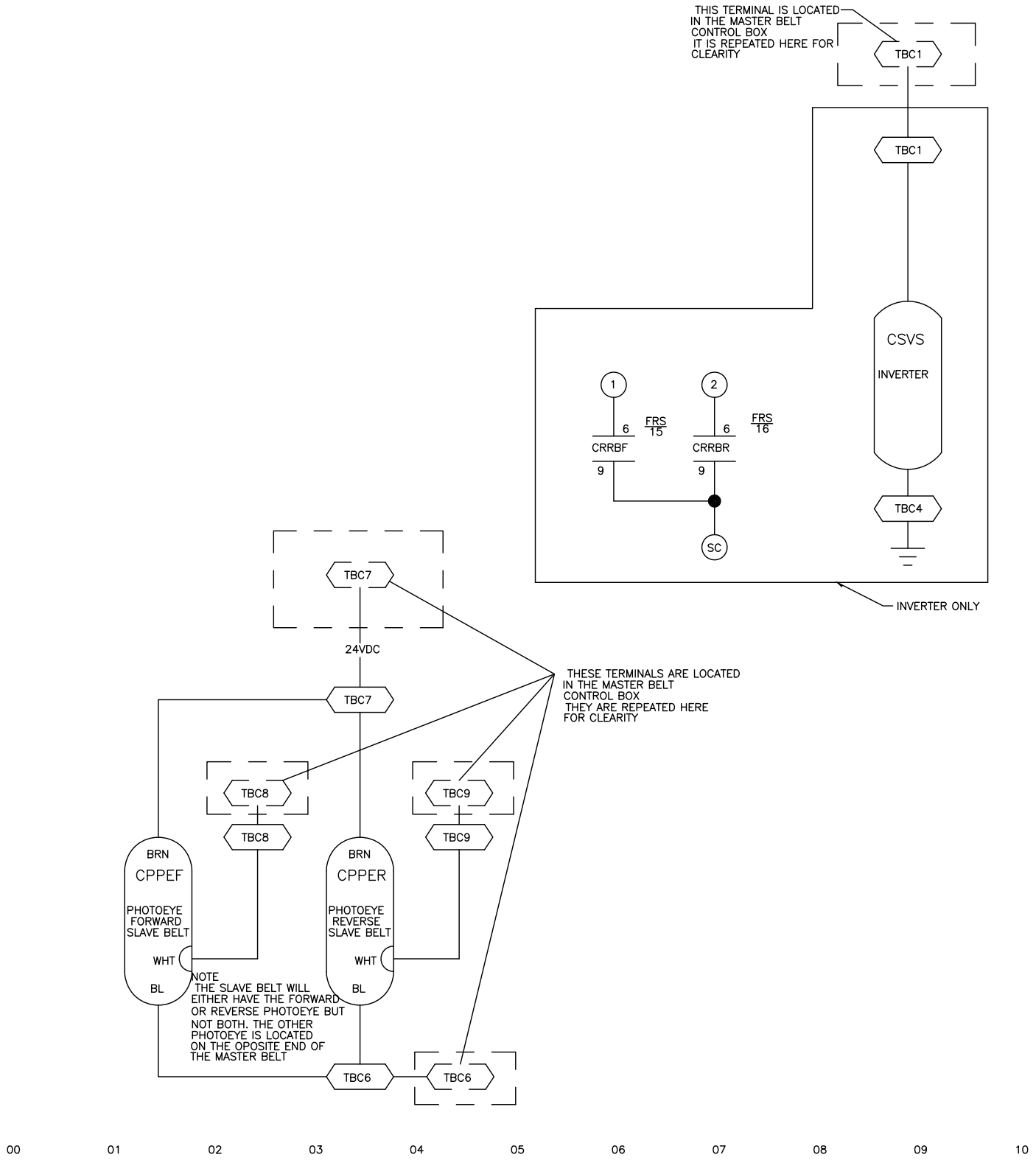

W6DM5FRS
2019303B

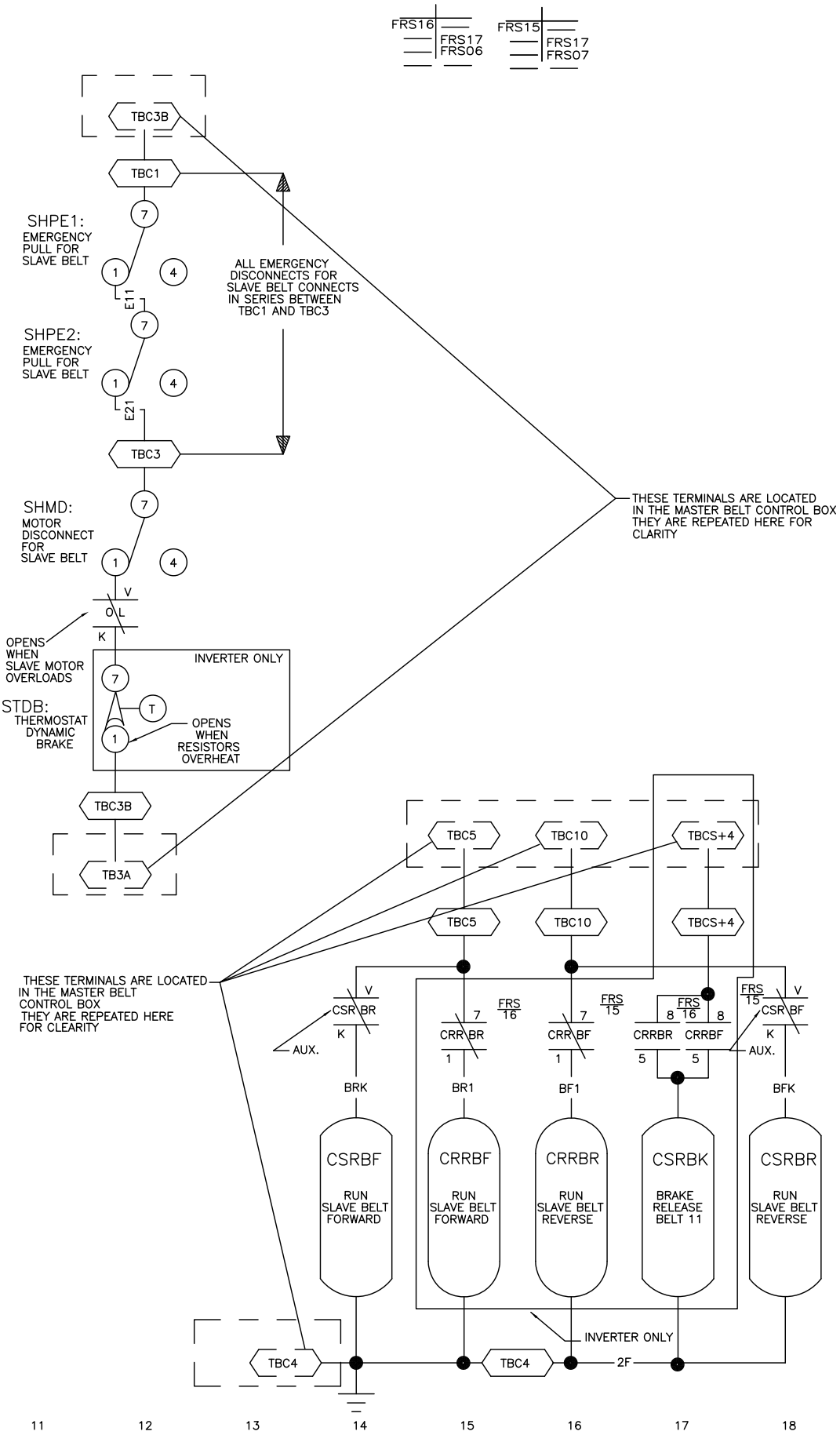

W6DM5FRS
2019303B

W6DM5FRS

MICRO 6 SYSTEMS
SCHEMATIC: CONTROLS FOR FORWARD & REVERSE FOR TYPICAL SLAVE BELT
110V1P50HZ/120V60HZ

PELLERIN MILNOR CORPORATION

NOTES:

1. THIS SCHEMATIC IS USED IF TWO BELTS ARE CONTROLLED AS ONE MILTRAC DEVICE. THE SLAVE BELT CONTROLLER IS WIRED TO THE MASTER BELT CONTROLLER.
2. TBC IS LOCATED IN THE BELT REVERSING CONTROL BOX OF EACH BELT.
3. DOTTED LINES INDICATED THAT CONTROLS ARE LOCATED IN THE MASTER BELT CONTROL BOX.
4. FORWARD INDICATES THE FLOW OF GOODS

W6DM5FRS
2019303B

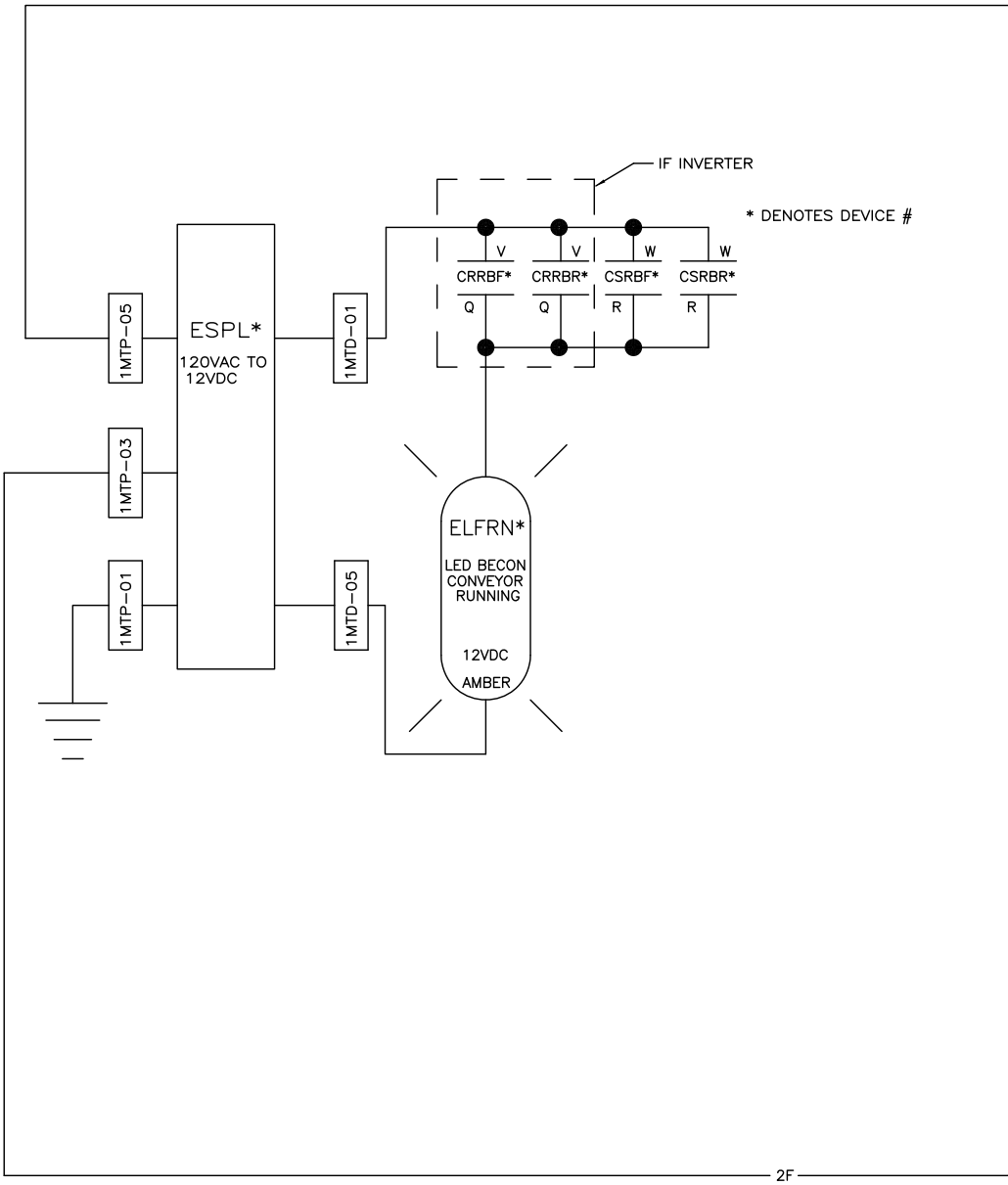

00 01 02 03 04 05 06 07 08 09 10

W6DM5FRVA
2018456B

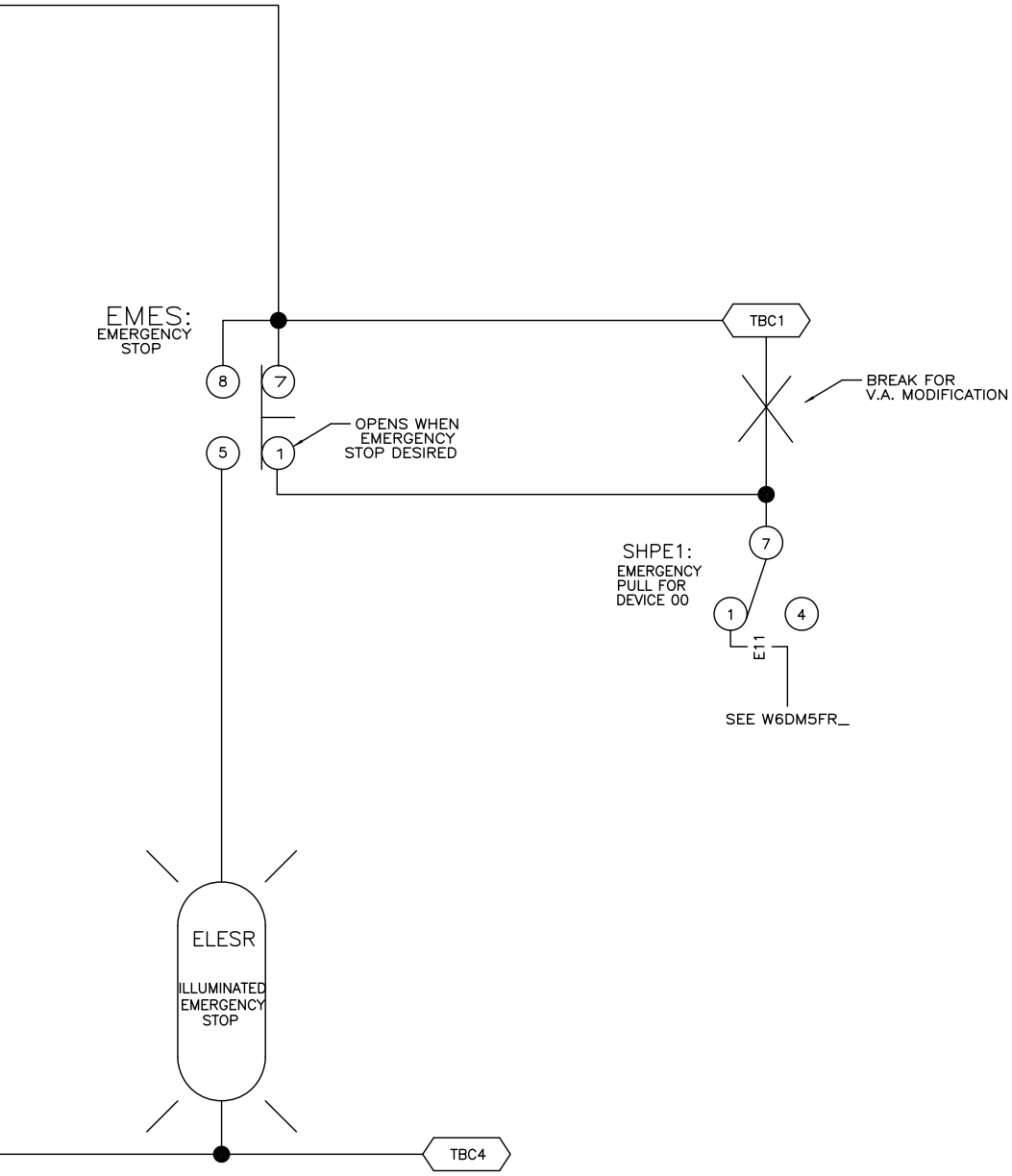

W6DM5FRVA

MICRO 6 SYSTEMS
SCHEMATIC: TYPICAL MODIFICATION
FOR BELT CONTROLLERS
FOR V.A. MEDICAL CENTER
110V1P50HZ/120V60HZ

PELLERIN MILNOR CORPORATION

11 12 13 14 15 16 17 18 19

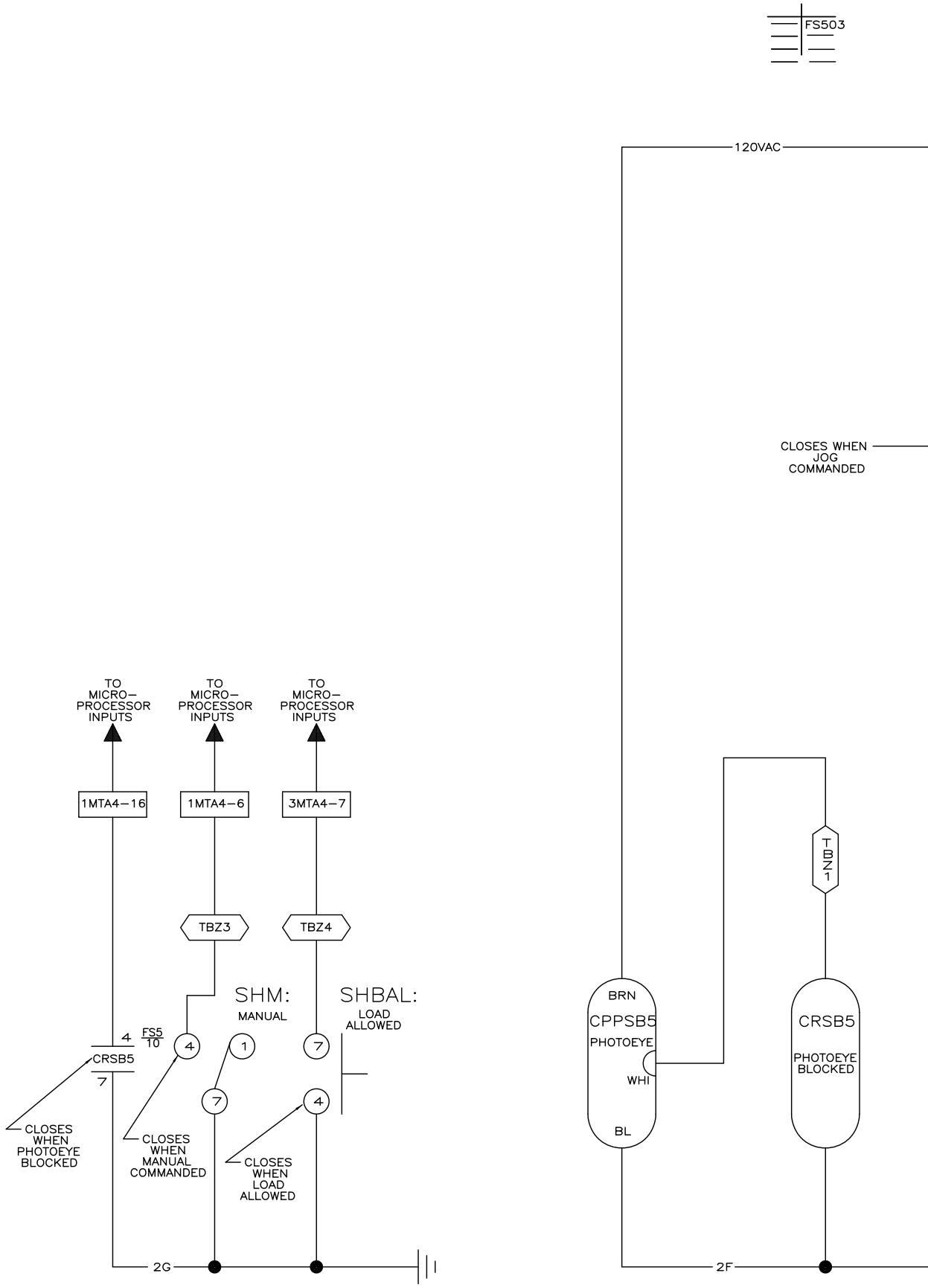

W6DM4FS5
2019303B

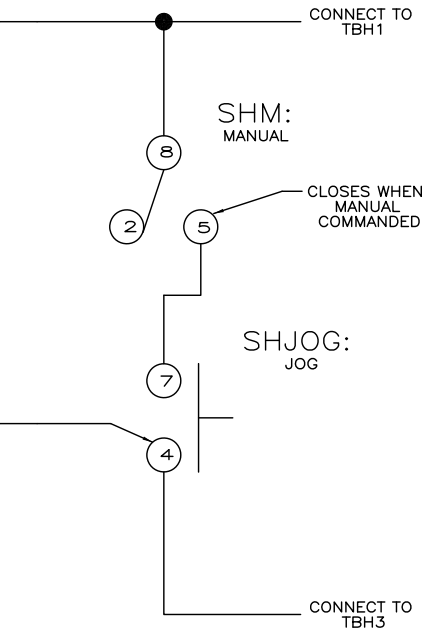

W6DM4FS5

MICRO 6 SYSTEMS

SCHEMATIC: FEEDER/SEQUENCER BELT #5

PELLERIN MILNOR CORPORATION

11 12 13 14 15 16 17 18 19

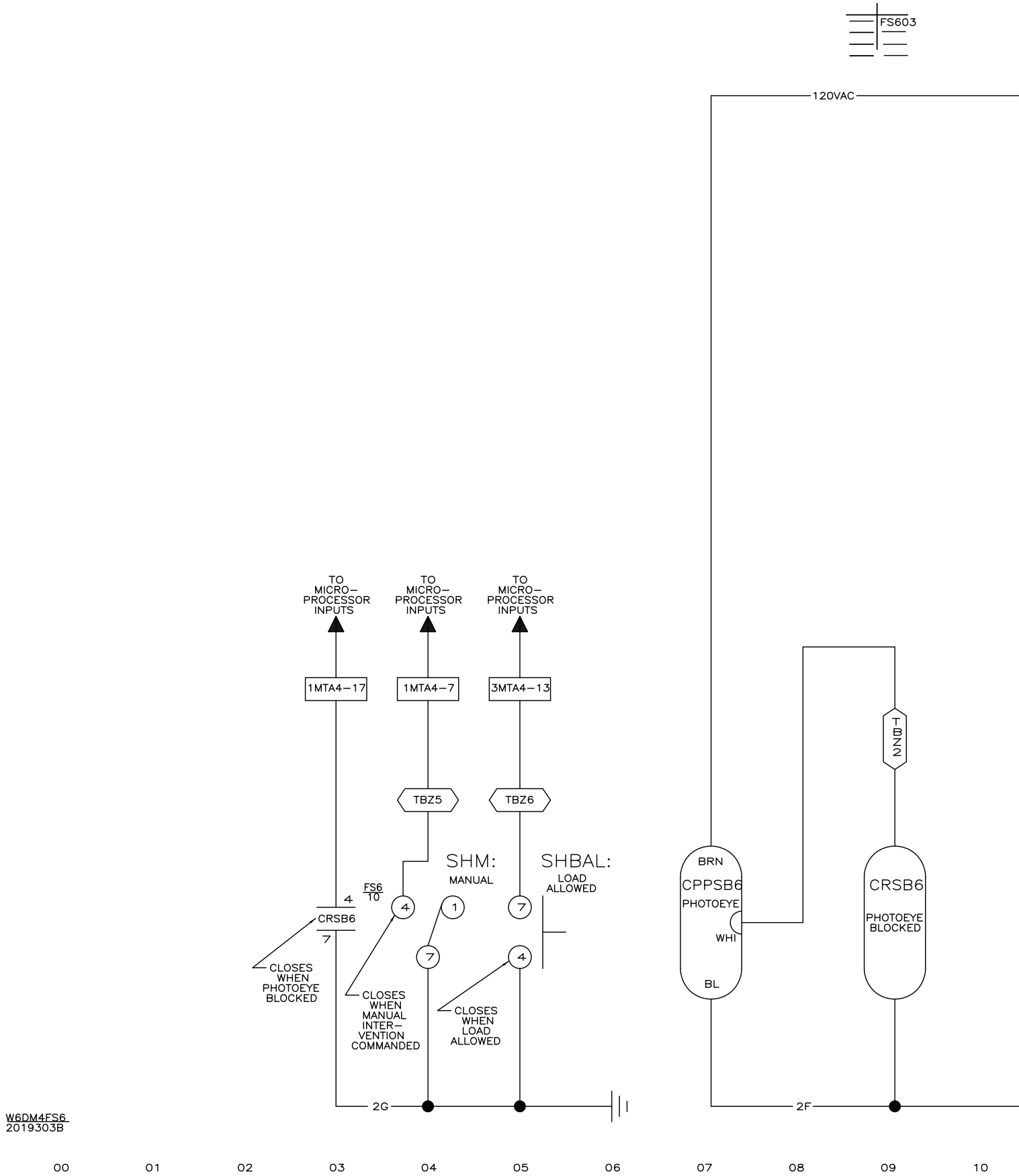
FS603
120VAC
TO MICRO– PROCESSOR INPUTS
TO MICRO– PROCESSOR INPUTS
TO MICRO– PROCESSOR INPUTS
1MTA4–17
1MTA4–7
3MTA4–13
TBZ5
TBZ6
TBZ2
SHM:
MANUAL
SHBAL:
LOAD ALLOWED
FS6
10
4
CRSB6
7
CLOSES WHEN PHOTOEYE BLOCKED
CLOSES WHEN MANUAL INTER– VENTION COMMANDED
CLOSES WHEN LOAD ALLOWED
BRN
CPPSB6
PHOTOEYE
WHI
BL
CRSB6
PHOTOEYE BLOCKED
2G
2F
W6DM4FS6
2019303B
00
01
02
03
04
05
06
07
08
09
10

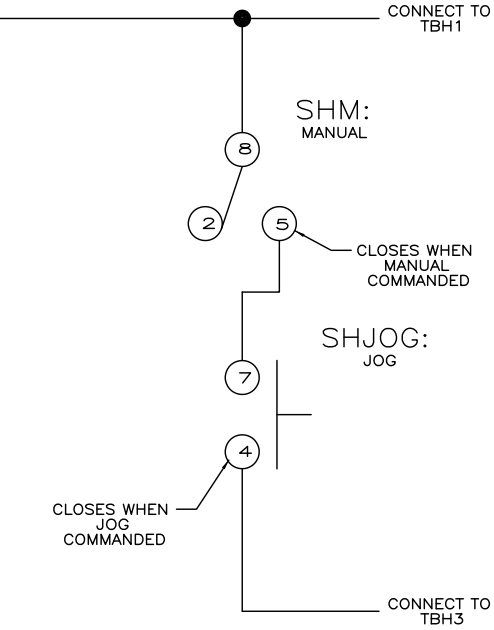

W6DM4FS6
2019303B

W6DM4FS6

MICRO 6 SYSTEMS
SCHEMATIC: FEEDER/SEQUENCER
BELT #6
PELLERIN MILNOR CORPORATION

W6DM4FS6
2019303B

11 12 13 14 15 16 17 18 19

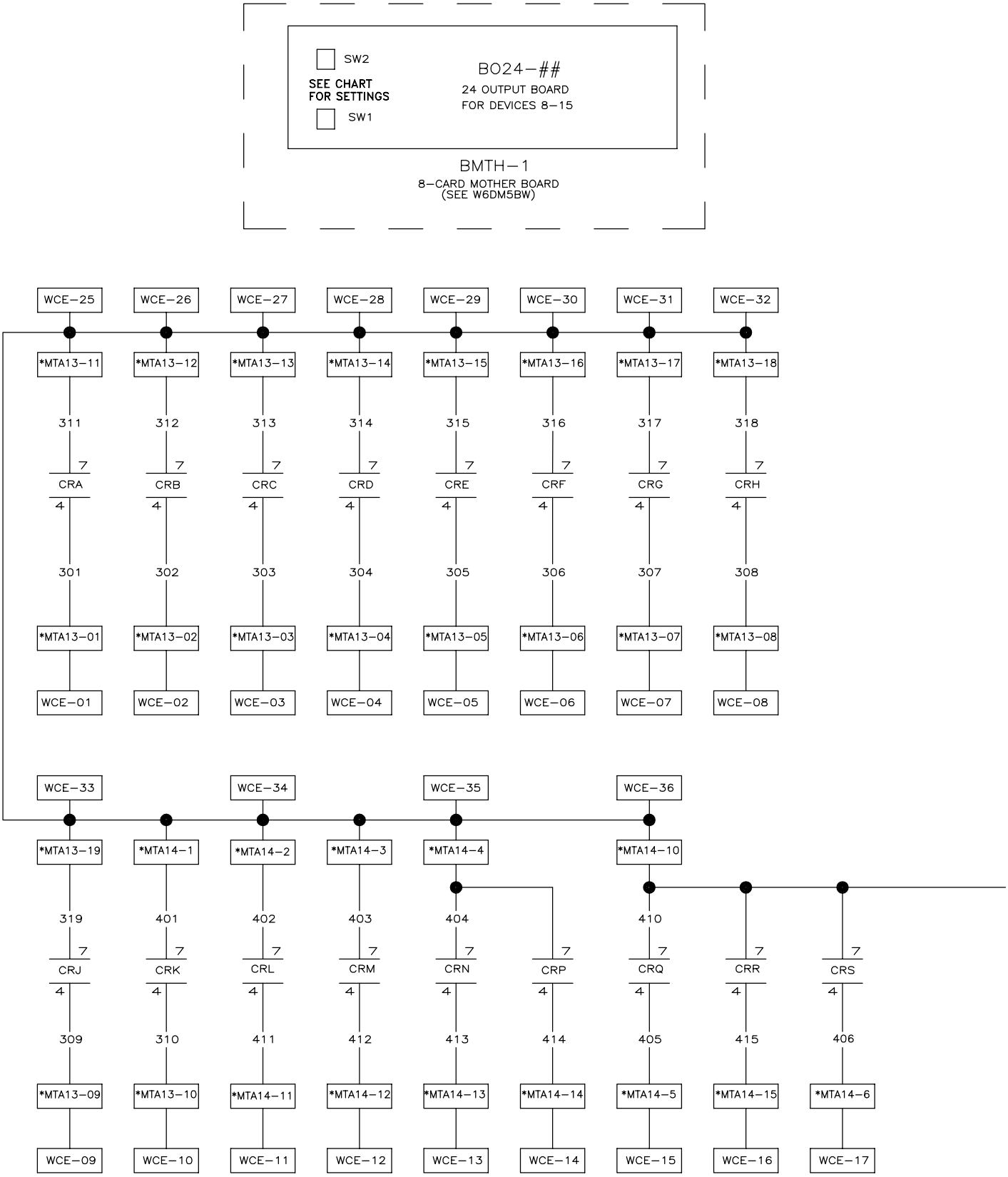

W6DM5LW
2007155B

W6DM5LW

MICRO 6 SYSTEMS
SCHEMATIC: DEVICE MASTER LOAD WAITING
DIFFERENT CUSTOMER (24 OUTPUT)

PELLERIN MILNOR CORPORATION

DIP SWITCH SETTING CHART

DEVICE NUMBER	BOARD ADDRESS SW2	BOARD ADDRESS SW1
0	1	1
1		
2		
3		
4		
5		
6		
7		
8	9	1
9		
10		
11		
12		
13		
14		
15		

OUTPUT TABLE

		BOARD ADDRESS		BOARD ADDRESS	
		SW2	SW1	SW2	SW1
		1	1	9	1
OUTPUT NUMBER	OUTPUT NAME	OUTPUT FUNCTION		OUTPUT FUNCTION	
0	CRA	LOAD WAITING DEVICE 0		LOAD WAITING DEVICE 8	
1	CRB	GOODS DIFFERENT DEVICE 0		GOODS DIFFERENT DEVICE 8	
2	CRC	LOAD WAITING DEVICE 1		LOAD WAITING DEVICE 9	
3	CRD	GOODS DIFFERENT DEVICE 1		GOODS DIFFERENT DEVICE 9	
4	CRE	LOAD WAITING DEVICE 2		LOAD WAITING DEVICE 10	
5	CRF	GOODS DIFFERENT DEVICE 2		GOODS DIFFERENT DEVICE 10	
6	CRG	LOAD WAITING DEVICE 3		LOAD WAITING DEVICE 11	
7	CRH	GOODS DIFFERENT DEVICE 3		GOODS DIFFERENT DEVICE 11	
8	CRJ	LOAD WAITING DEVICE 4		LOAD WAITING DEVICE 12	
9	CRK	GOODS DIFFERENT DEVICE 4		GOODS DIFFERENT DEVICE 12	
10	CRL	LOAD WAITING DEVICE 5		LOAD WAITING DEVICE 13	
11	CRM	GOODS DIFFERENT DEVICE 5		GOODS DIFFERENT DEVICE 13	

		BOARD ADDRESS		BOARD ADDRESS	
		SW2	SW1	SW2	SW1
		1	1	9	1
OUTPUT NUMBER	OUTPUT NAME	OUTPUT FUNCTION		OUTPUT FUNCTION	
12	CRN	LOAD WAITING DEVICE 6		LOAD WAITING DEVICE 14	
13	CRP	GOODS DIFFERENT DEVICE 6		GOODS DIFFERENT DEVICE 14	
14	CRQ	LOAD WAITING DEVICE 7		LOAD WAITING DEVICE 15	
15	CRR	GOODS DIFFERENT DEVICE 7		GOODS DIFFERENT DEVICE 15	
16	CRS	--		--	
17	CRT	--		--	
18	CRU	--		--	
19	CRV	--		--	
20	CRW	--		--	
21	CRX	--		--	
22	CRY	--		--	
23	CRZ	--		--	

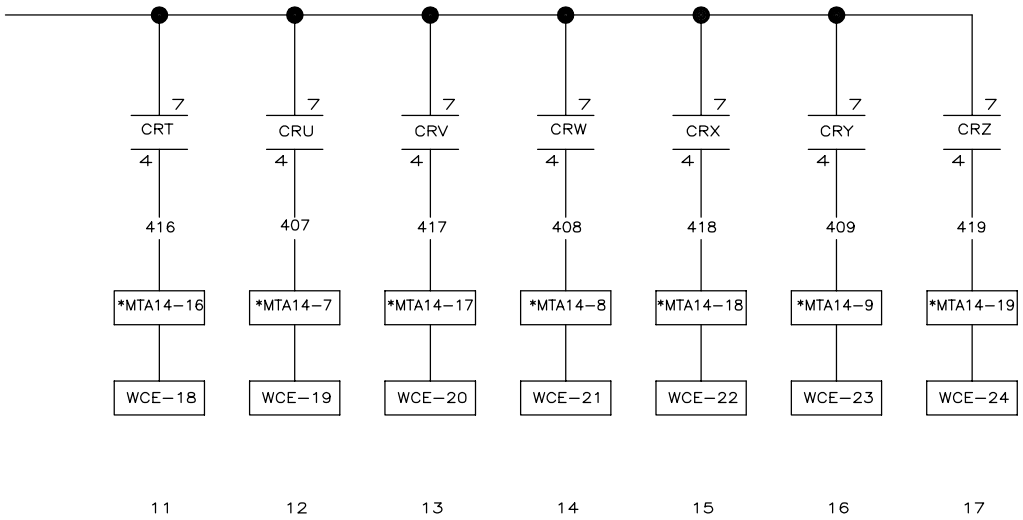

NOTE:
1. THE BOARD WIRING SHOWN IS TYPICAL. REFER TO THE DIP SWITCH CHART FOR CORRECT DIP SWITCH SETTING FOR EACH DEVICE
2. THE ASTERISK (*) IN THE MTA DESIGNATION REPRESENTS THE BOARD ADDRESS AS GIVEN ON THE OUTPUT TABLE
3. REFER TO THE OUTPUT TABLE FOR A FUNCTIONAL DESCRIPTION OF THE OUTPUTS FOR EACH BOARD ADDRESS.

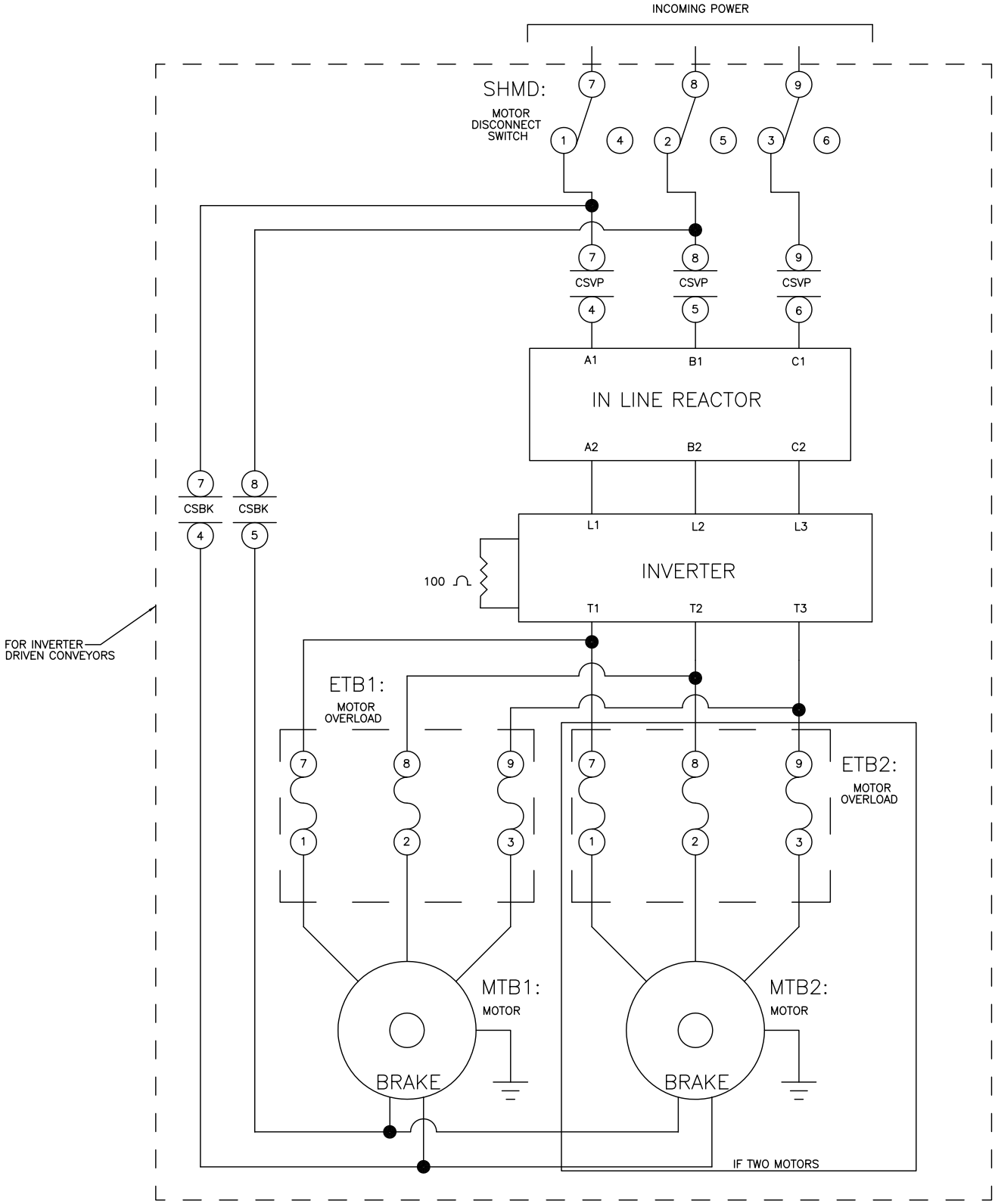

00 01 02 03 04 05 06 07 08 09

W6DM4MR
2017463B

W6DM4MR
2017463B

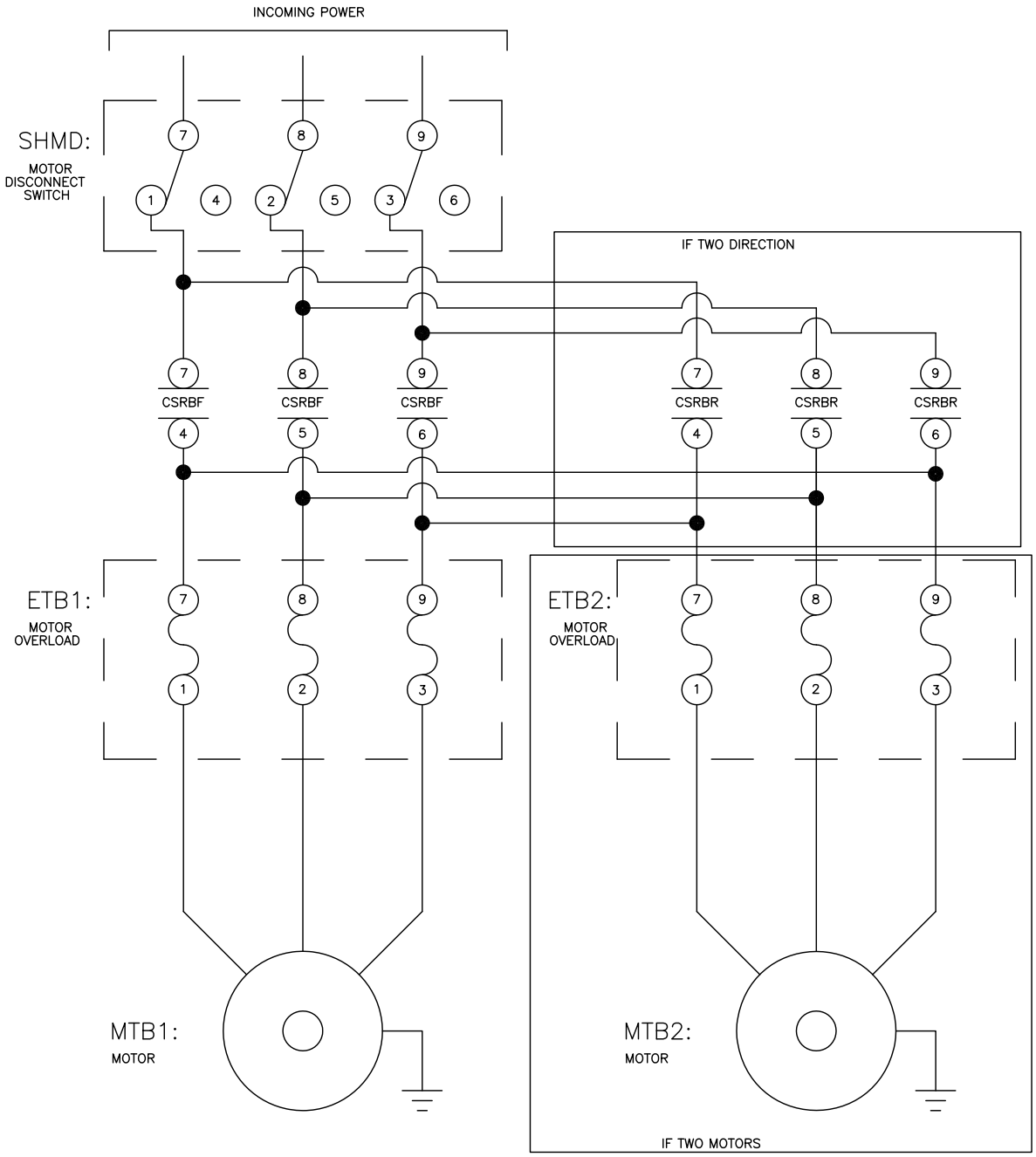

W6DM4MR
MICRO 6 SYSTEMS
SCHEMATIC: TYPICAL BELT MOTOR WIRING

PELLERIN MILNOR CORPORATION

10 11 12 13 14 15

W6DM4MR
2017463B

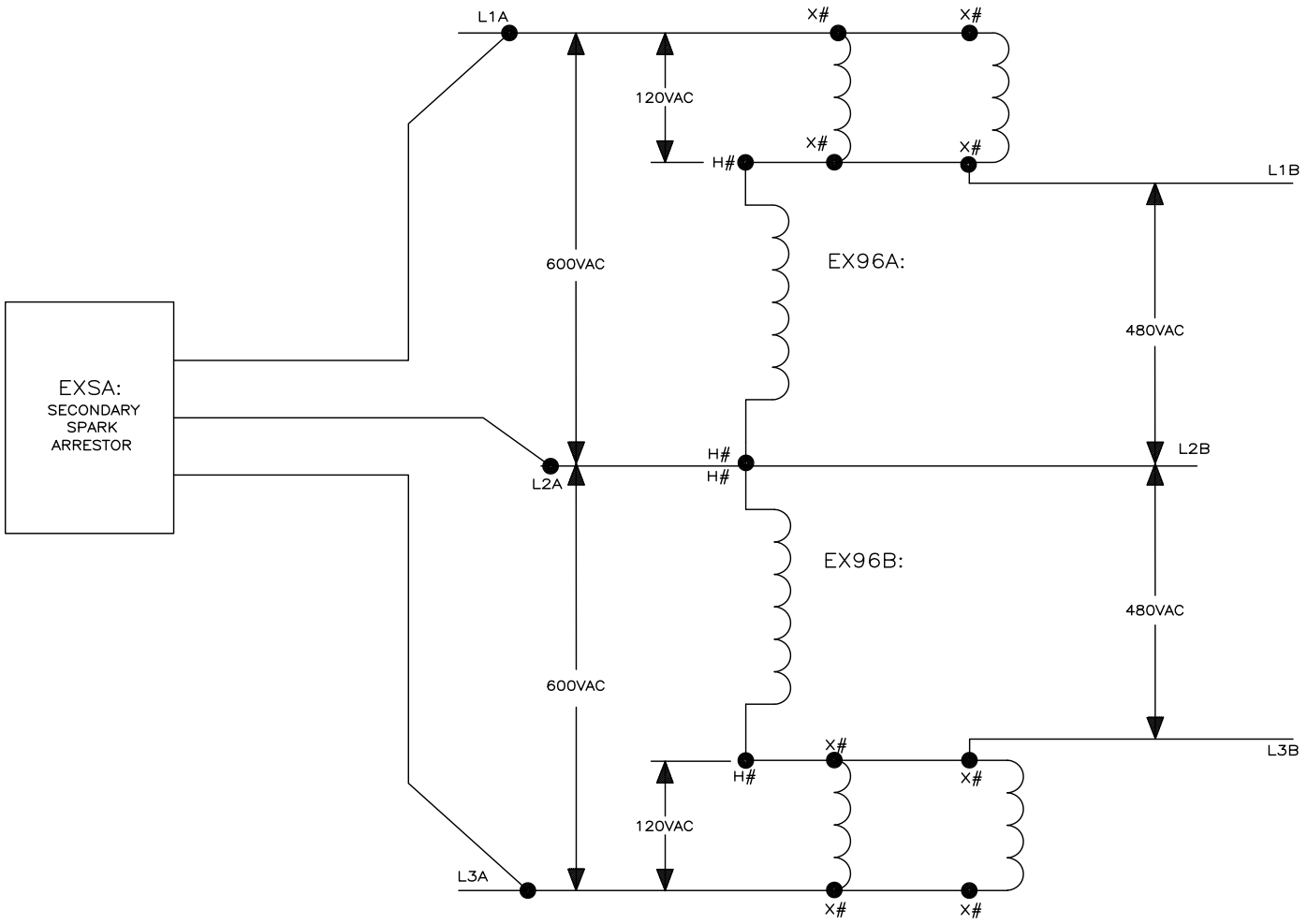

REFER TO TRANSFORMER WIRING DIAGRAM FOR APPROPIATE WIRE NUMBERS.

THE PRIMARY OF EACH TRANSFORMER NOTED BY H# MUST BE WIRED FOR 480 VOLTS. THE SECONDARY OF EACH TRANSFORMER NOTED BY X# MUST BE WIRED FOR 120 VOLTS.

00 01 02 03 04 05 06 07 08 09 10

W6DM4MR6
2019444B

11

12

13

14

15

16

17

W6DM4MR6

MICRO 6 SYSTEMS

SCHEMATIC: 600V TO 480V STEP DOWN INVERTER DRIVE ONLY

PELLERIN MILNOR CORPORATION

W6DM4MR6
2019444B

W6DM4MR6
2019444B

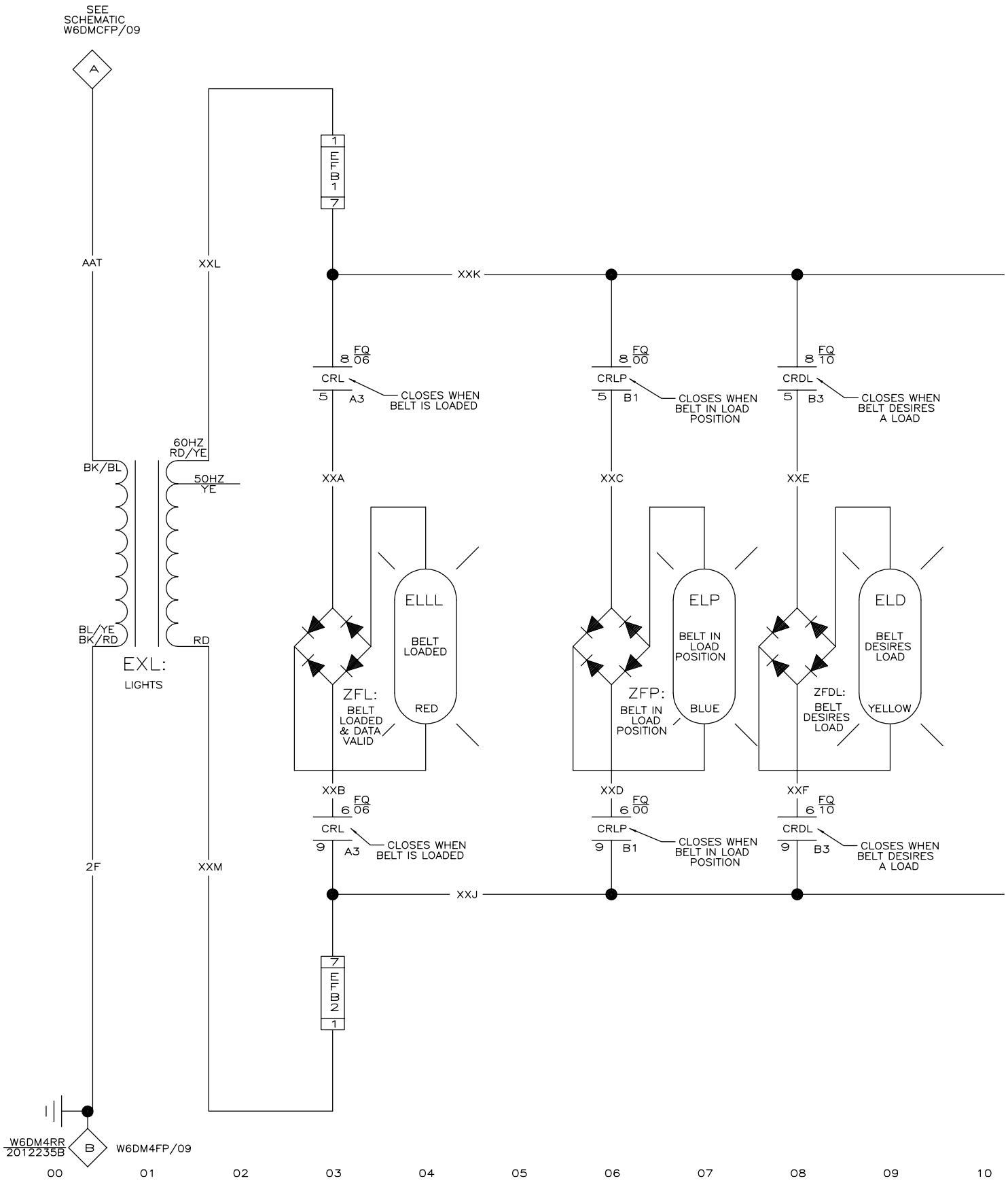
SEE SCHEMATIC W6DMCFP/09
A
AAT
XXL
1
EFB1
7
XXK
FQ 06
8
CRL
5
A3
CLOSES WHEN BELT IS LOADED
FQ 00
CRLP
B1
CLOSES WHEN BELT IN LOAD POSITION
FQ 10
CRDL
B3
CLOSES WHEN BELT DESIRES A LOAD
60HZ RD/YE
BK/BL
50HZ YE
XXA
XXC
XXE
ELLL
BELT LOADED
RED
ZFL:
BELT LOADED & DATA VALID
ELP
BELT IN LOAD POSITION
BLUE
ZFP:
BELT IN LOAD POSITION
ELD
BELT DESIRES LOAD
YELLOW
ZFDL:
BELT DESIRES LOAD
BL/YE BK/RD
RD
EXL:
LIGHTS
XXB
XXD
XXF
6
9
2F
XXM
XXJ
7
EFB2
1
W6DM4RR 2012235B
B
W6DM4FP/09
00
01
02
03
04
05
06
07
08
09
10

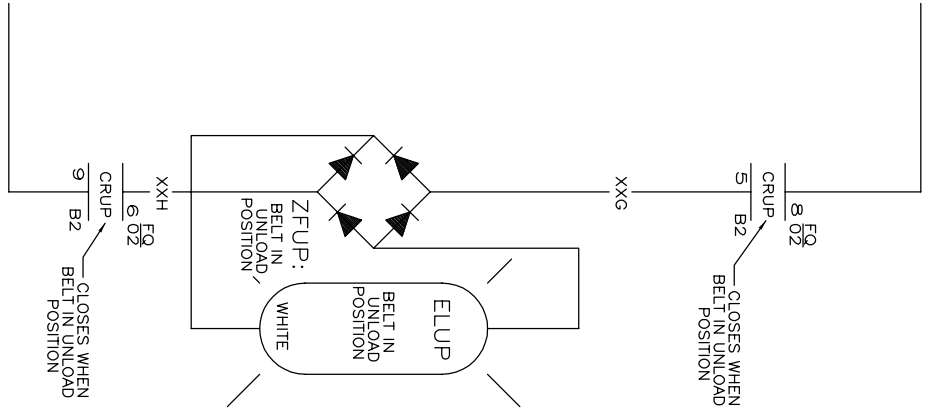

W6DM4RR

MICRO 6 SYSTEMS

SCHEMATIC: BELT CONTROLS FOR DEVICE MASTER LOADING BELT

110V50HZ/120V60HZ

PELLERIN MILNOR CORPORATION

W6DM4RR
2012235B

W6DM4RR
2012235B

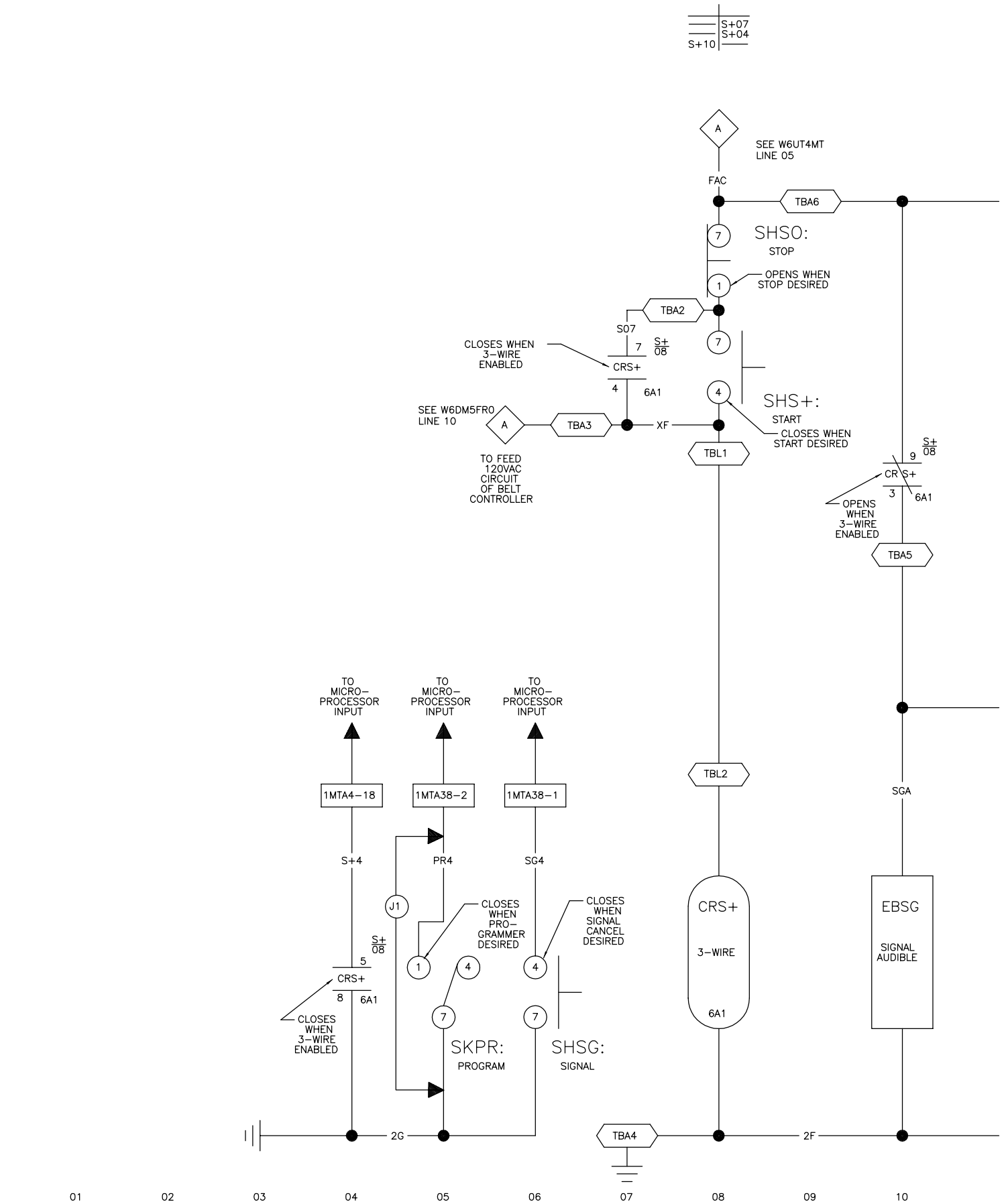

W6DM5S+
2012235B

S+13

WIRE COLORING CODE

WIRE NO.	VOLTAGE	WIRE COLOR
V1	+5VDC	BLUE
V2	+12VDC	BLUE/ORANGE
V3	−12VDC	BLUE/BLACK
2F	CONTROL GND	RED/WHITE
SRH	SERIAL HIGH	BLUE/RED
SRL	SERIAL LOW	BLUE/BLACK
ESH	MILNET HIGH	BLUE/RED
ESL	MILNET LOW	BLUE/BLACK

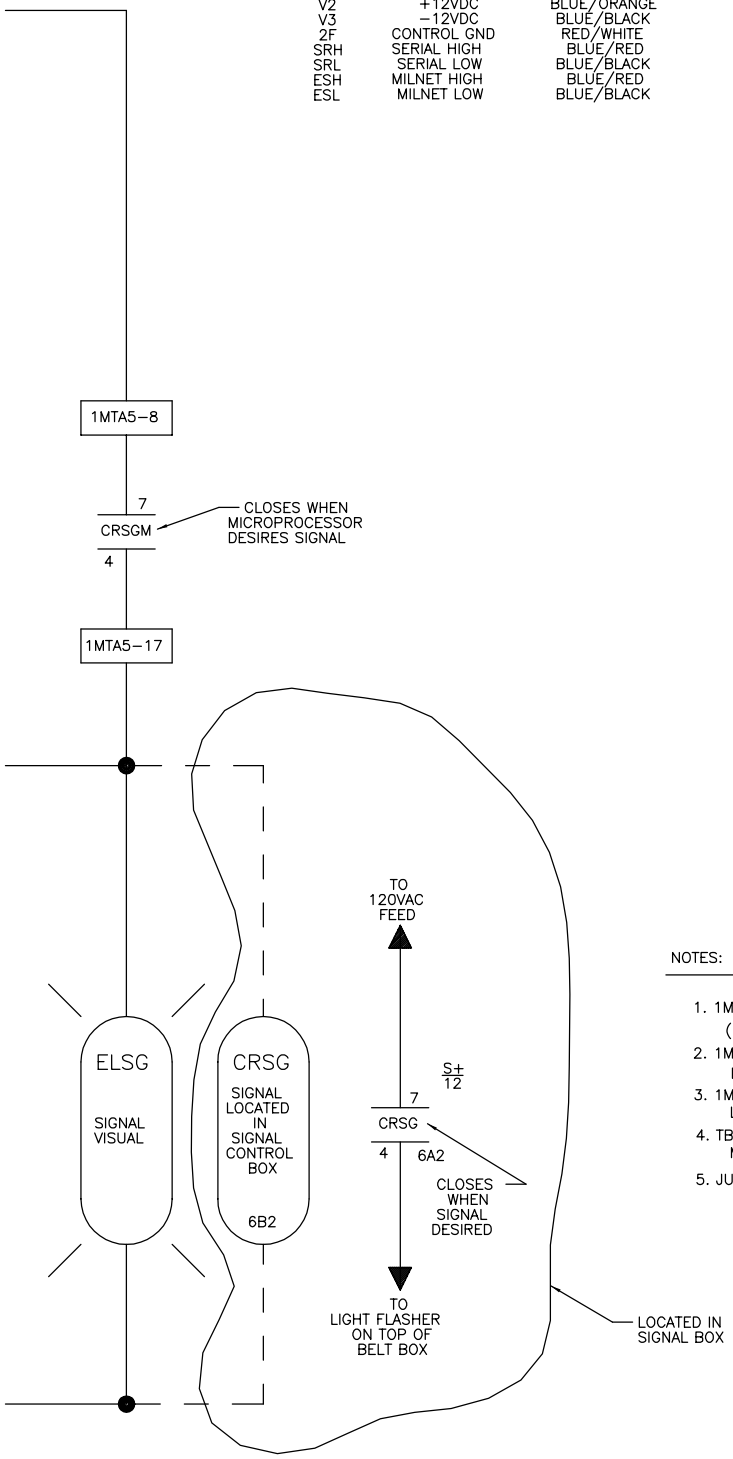

NOTES:

1. 1MTD, 1MTP ARE LOCATED ON ESPS (POWER SUPPLY).
2. 1MTA31, 1MTA32, 1MTA33, 1MTA34, 1MTA38 ARE LOCATED ON BPB (PROCESSOR BOARD).
3. 1MTA1, 1MTA2, 1MTA3, 1MTA4, 1MTA5, ARE LOCATED ON BIO−1 (8 OUTPUT − 16 INPUT BOARD).
4. TBA IS LOCATED IN 8 OUTPUT − 16 INPUT BOX OR MULTITRAC CABINET.
5. JUMPER (J1) IS ADDED FOR P.C. DEVICE MASTER.

W6DM5S+
MICRO 6 SYSTEMS
SCHEMATIC: 3−WIRE CIRCUIT
110V1P50HZ/120V1P60HZ
PELLERIN MILNOR CORPORATION

11 12 13 14 15 16 17 18 19

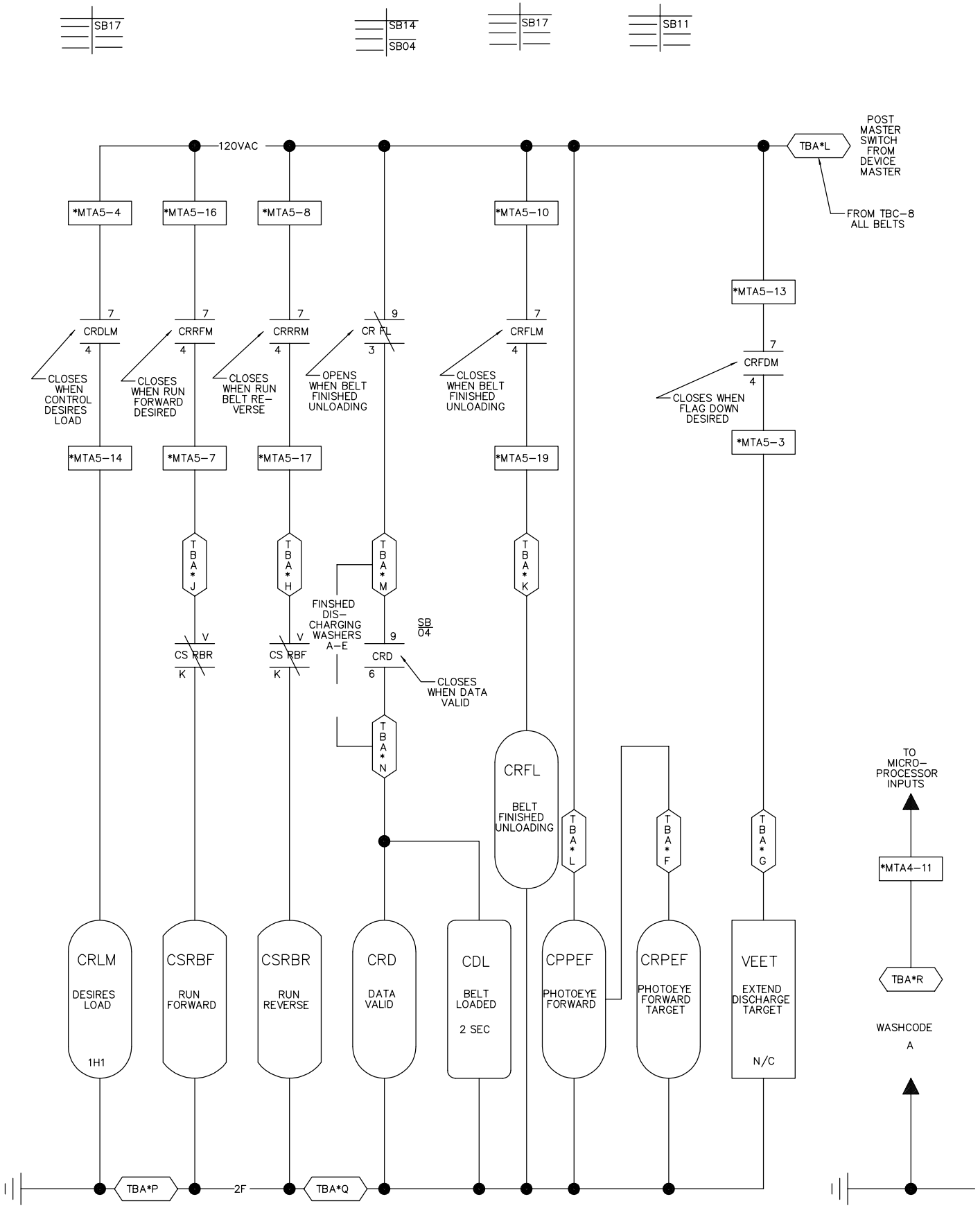
SB17
SB14
SB04
SB17
SB11
120VAC
TBA*L
POST MASTER SWITCH FROM DEVICE MASTER
FROM TBC-8 ALL BELTS
*MTA5-4
*MTA5-16
*MTA5-8
*MTA5-10
*MTA5-13
CRDLM
CRRFM
CRRRM
CR FL
CRFLM
CRFDM
CLOSES WHEN CONTROL DESIRES LOAD
CLOSES WHEN RUN FORWARD DESIRED
CLOSES WHEN RUN BELT RE-VERSE
OPENS WHEN BELT FINISHED UNLOADING
CLOSES WHEN BELT FINISHED UNLOADING
CLOSES WHEN FLAG DOWN DESIRED
*MTA5-14
*MTA5-7
*MTA5-17
*MTA5-19
*MTA5-3
TBA*J
TBA*H
TBA*M
TBA*K
FINSHED DIS-CHARGING WASHERS A-E
CS RBR
CS RBF
CRD
SB 04
CLOSES WHEN DATA VALID
TBA*N
CRFL
BELT FINISHED UNLOADING
TBA*L
TBA*F
TBA*G
TO MICRO-PROCESSOR INPUTS
*MTA4-11
TBA*R
WASHCODE
A
CRLM
DESIRES LOAD
1H1
CSRBF
RUN FORWARD
CSRBR
RUN REVERSE
CRD
DATA VALID
CDL
BELT LOADED
2 SEC
CPPEF
PHOTOEYE FORWARD
CRPEF
PHOTOEYE FORWARD TARGET
VEET
EXTEND DISCHARGE TARGET
N/C
TBA*P
2F
TBA*Q
00
01
02
03
04
05
06
07
08
09
10
W6DM4SB
2012235B

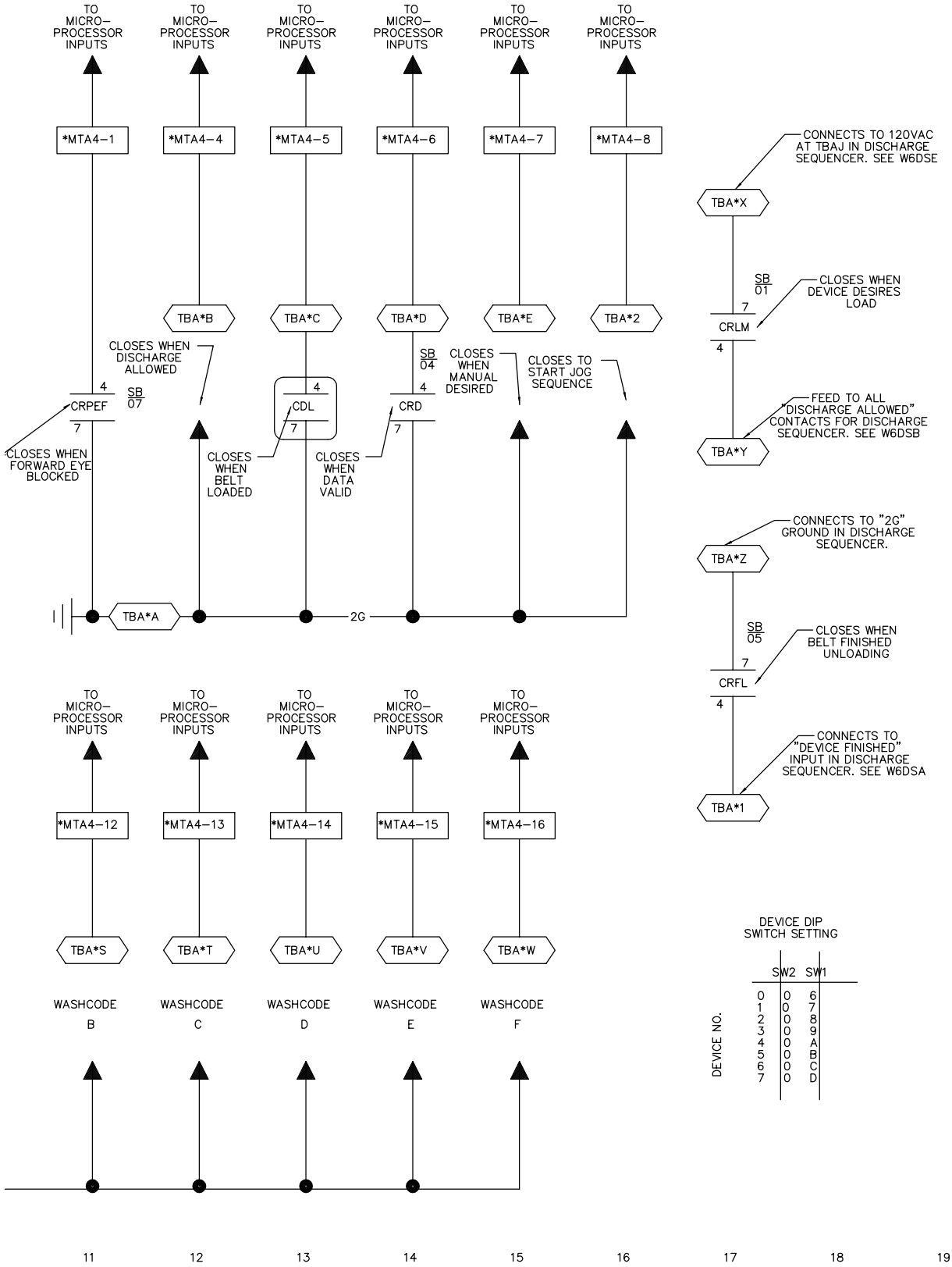

DEVICE DIP SWITCH SETTING

DEVICE NO.	SW2	SW1
0	0	6
1	0	7
2	0	8
3	0	9
4	0	A
5	0	B
6	0	C
7	0	D

W6DM4SB
MICRO 6 SYSTEMS
SCHEMATIC: SPECIAL BOARD WIRING FOR DEVICE MASTER

PELLERIN MILNOR CORPORATION

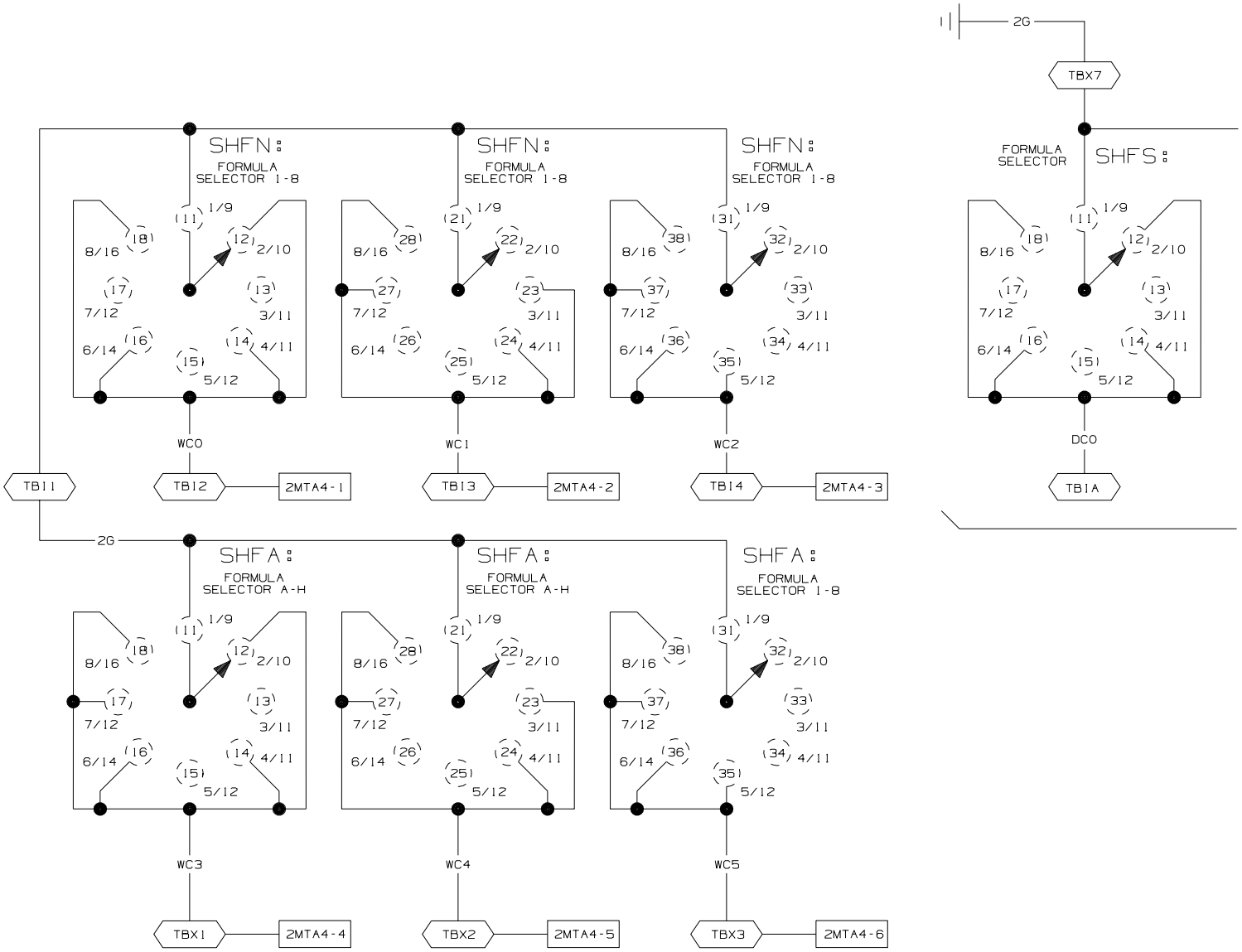

00 01 02 03 04 05 06 07 08 09 10

W6DM4SD
2000336B

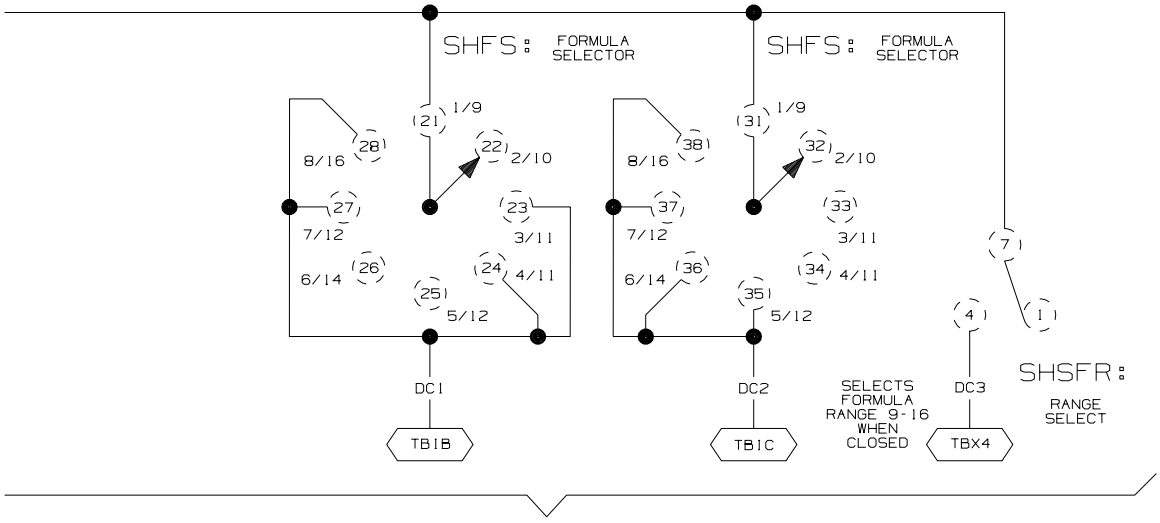

REMOTE FORMULA SELECTOR STATION OPTION
FOR DESTINATION AND/OR DRY CODES

W6DMCSD
DEVICE MASTER
MICRO 6 SYSTEM SERIAL CONTROLS
SCHEMATIC: REMOTE FORMULA, DRY CODE, &
DESTINATION SELECTION SWITCH
PELLERIN MILNOR CORPORATION

11 12 13 14 15 16 17

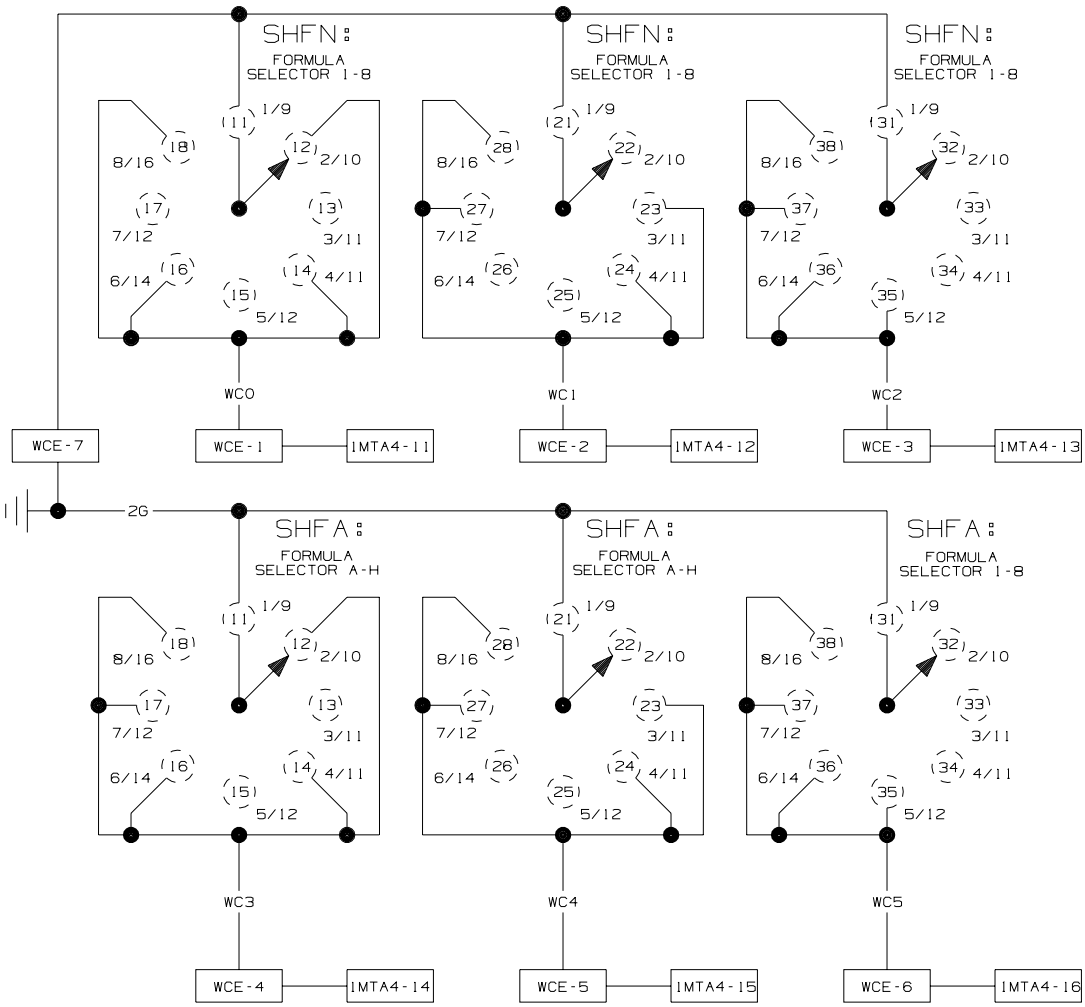

00 01 02 03 04 05 06 07 08 09

W6DM4SF
2000336B

REMOTE WASH FORMULA

WASH CODE	SW N	SW A	WASH CODE	SW N	SW A	WASH CODE	SW N	SW A	WASH CODE	SW N	SW A
01	1	A	17	1	C	33	1	E	49	1	G
02	2	A	18	2	C	34	2	E	50	2	G
03	3	A	19	3	C	35	3	E	51	3	G
04	4	A	20	4	C	36	4	E	52	4	G
05	5	A	21	5	C	37	5	E	53	5	G
06	6	A	22	6	C	38	6	E	54	6	G
07	7	A	23	7	C	39	7	E	55	7	G
08	8	A	24	8	C	40	8	E	56	8	G
09	1	B	25	1	D	41	1	F	57	1	H
10	2	B	26	2	D	42	2	F	58	2	H
11	3	B	27	3	D	43	3	F	59	3	H
12	4	B	28	4	D	44	4	F	60	4	H
13	5	B	29	5	D	45	5	F	61	5	H
14	6	B	30	6	D	46	6	F	62	6	H
15	7	B	31	7	D	47	7	F	63	7	H
16	8	B	32	8	D	48	8	F	64	8	H

W6DM4SF
MICRO 6 SYSTEMS
SCHEMATIC: REMOTE FORMULA SELECTION SWITCH

PELLERIN MILNOR CORPORATION

10 11 12 13 14 15 16 17

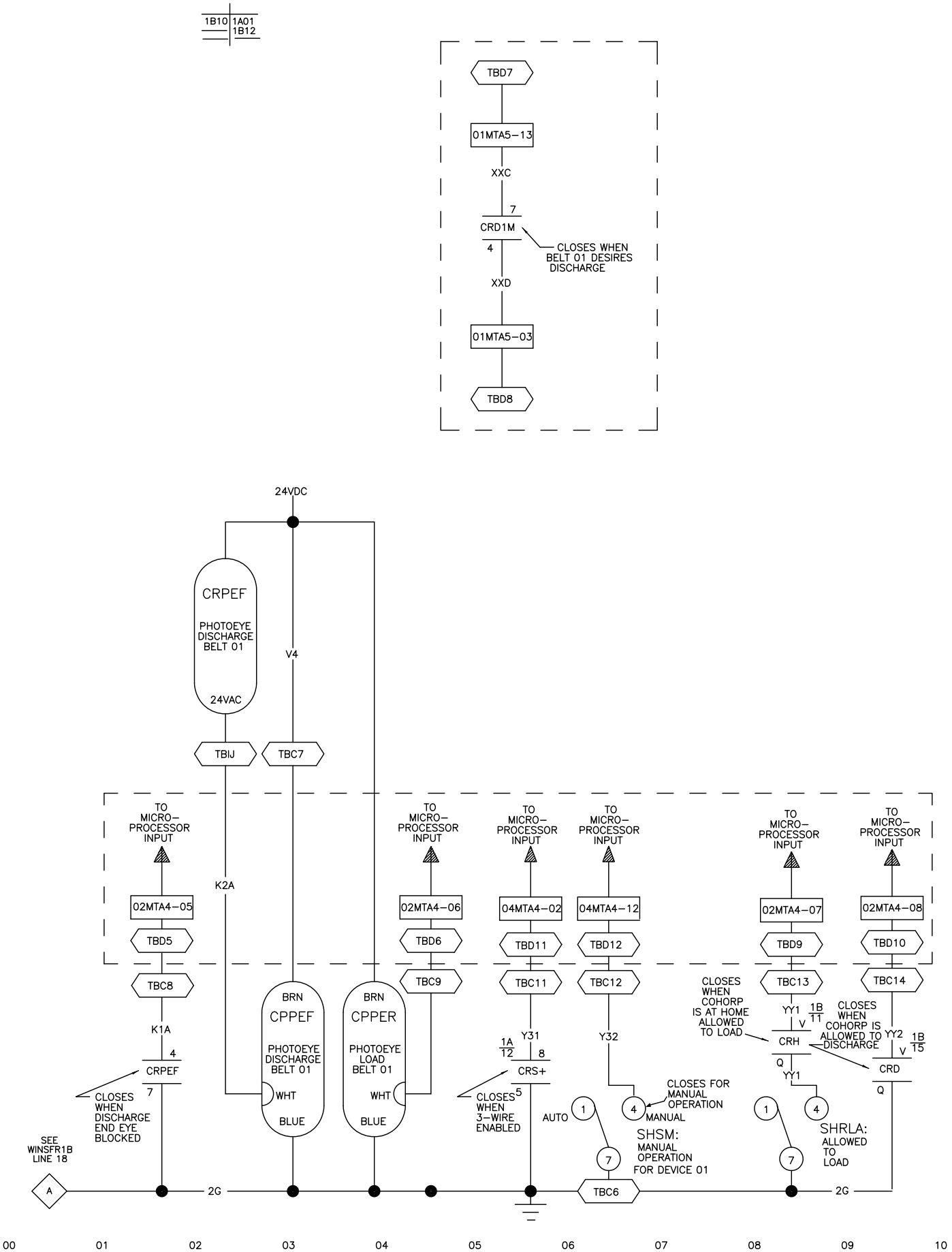

WINSFR1A
2024062B

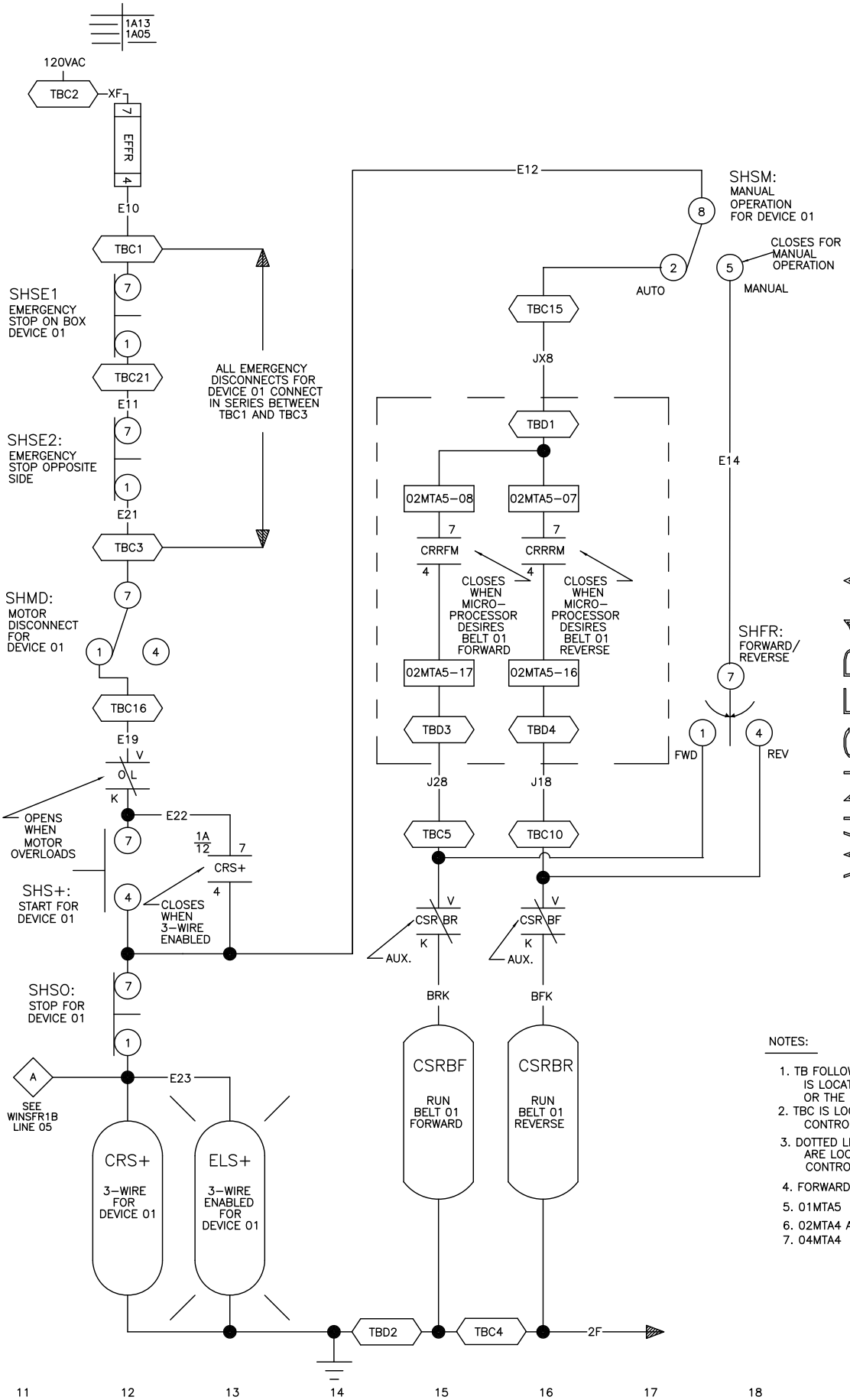

WINSFR1A
MICRO 6 SYSTEMS
SCHEMATIC: CONTROLS FOR FORWARD & REVERSE FOR BELT 1 COHORP
110V1P50HZ/120V60HZ
PELLERIN MILNOR CORPORATION

NOTES:

1. TB FOLLOWED BY LETTER THEN DEVICE NUMBER IS LOCATED IN THE MULTITRAC CONTROL BOX OR THE DEVICE MASTER CONTROL BOX.
2. TBC IS LOCATED IN THE BELT REVERSING CONTROL BOX.
3. DOTTED LINES INDICATE THAT CONTROLS ARE LOCATED IN THE MULTITRAC CONTROL BOX.
4. FORWARD INDICATES THE FLOW OF GOODS
5. 01MTA5 IS LOCATED ON BIO-01
6. 02MTA4 AND 02MTA5 ARE LOCATED ON BIO-02
7. 04MTA4 IS LOCATED ON BIO-04

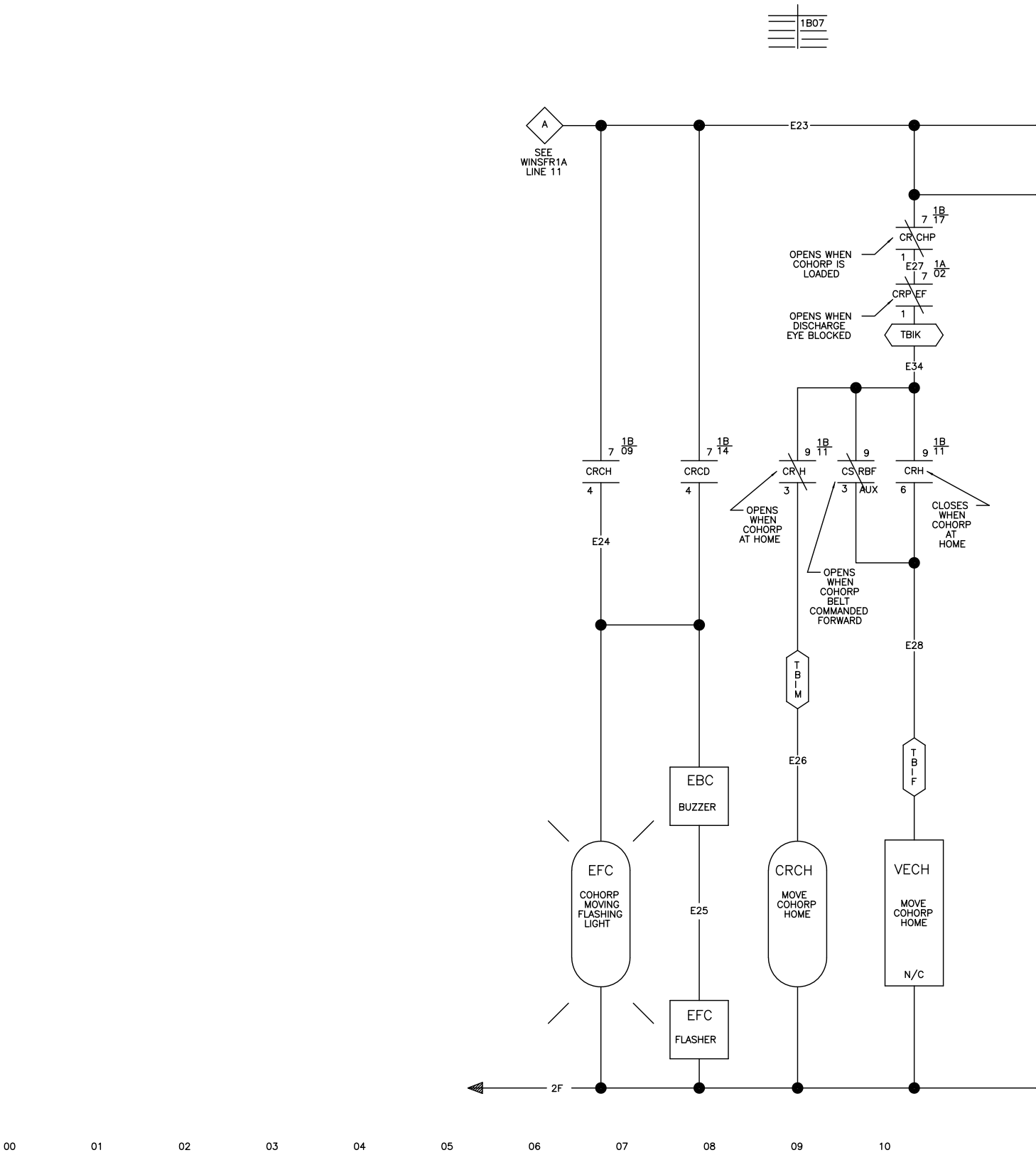

WINSFR1B
2024062B

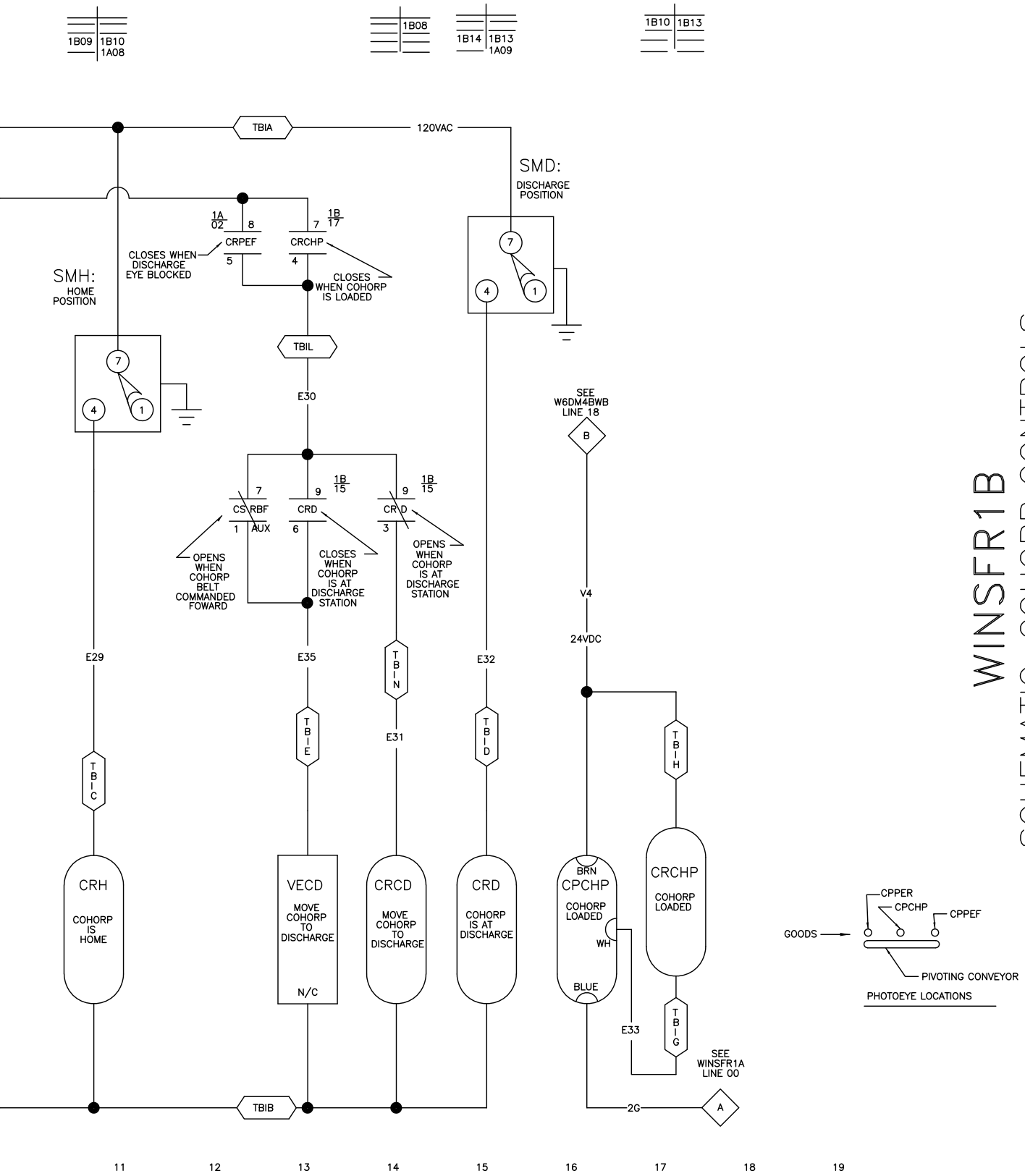

WINSFR1B
SCHEMATIC: COHORP CONTROLS (SEE WINSFR1A)
PELLERIN MILNOR CORPORATION

Device Master Allied Interfaces

3

BICALC16 (Published) Book specs- Dates: 20050607 / 20050607 / 20050608 Lang: ENG01 Applic: CAL

Device Master™ Allied Dryer Interface

The role of Device Master in a Milnor® automated laundering system is to represent an allied (non-Milnor) device as a Milnor device to Milnor's Miltrac™ system controller. The seven generic device types currently defined by the PC Device Master software accommodate a variety of allied equipment. One device type is Type 3, Allied Dryer (see manual MTYCDR01, “Technical Reference—Using the Device Master Controller”). This generic type, along with the Device Master inputs and outputs described herein, comprise the Device Master allied dryer interface, and provide better control of an allied dryer than can be achieved otherwise.

This document summarizes the Device Master allied dryer interface signals available and identifies them in the Device Master circuitry. These signals have the same electrical and functional specifications as stated in document BICALC02, “Milnor Allied Interface Specifications and Signals...” in manual MTPALI01 “Installation—Allied Interfaces...”

1. What the Device Master Allied Dryer Interface Does

Milnor shuttles provide an allied discharge interface (see document BICALC02, “Milnor Allied Interface Specifications and Signals...”) that can be used to electrically interface the shuttle with an allied dryer. However, because this interface is independent of Miltrac, Miltrac functionality is unavailable to the allied dryer. For example, Miltrac cannot sequence the loading of an allied dryer within a bank of dryers in a Miltrac system. Device Master device Type 3, Allied Dryer solves this problem by permitting an allied dryer to appear to, and be handled by Miltrac as a Milnor dryer.

For discharge to a belt, Device Master device Type 3 also provides a means of interfacing an allied dryer with a dryer discharge conveyor. Milnor does not offer a dedicated belt controller with an allied loading interface to perform this function.

2. Summary of Device Master Allied Dryer Signals

The Device Master allied dryer interface passes only the batch data needed for dryer processing. This currently includes four binary outputs which provide for 16 drycodes and one output to signal a partial (single cake) load. There is no need to pass batch data for down-stream devices (if any). This is handled by Miltrac.

Table 1 lists the operational signals passing between Device Master and the allied dryer and relates them to the generic functions described in document BICALC13, “Summary of Milnor Allied Interface Capability...” in manual MTPALI01 “Installation—Allied Interfaces...” The operational signals have meanings similar to those of the allied interfaces that this interface can be used in place of (such as a Milnor shuttle discharge interface). However, the words “input” and “output” in the following tables refer to the Device Master controller, as opposed to the Milnor machine controller (such as a shuttle controller) that would otherwise provide the interface.

Table 1: Operational Functions and Available Signals

Function Type-->	Directional Functions				Transfer Functions						Confirmation Functions			
Function Name--> / Physical Interface	2nd level	Opposite side	At left	At right	Early call	Discharge desired	Load desired	Loading mode	Discharge allowed	Load allowed	Transfer not complete	Error: cancel transfer	data valid	transfer complete
* All batch data outputs close at this time, as well.														

3. Signals—Device Master Allied Dryer Interface

The signals tables provided herein are organized much the same as those in “Milnor Allied Interface Specifications and Signals...” in manual MTPALI01 “Installation—Allied Interfaces...” However, with Device Master, the various interface functions (such as load desired) can be considered either a loading or a discharge function, depending on whether they are viewed from the standpoint of the allied device (which Device Master represents) or the Milnor device it is physically intefaced with. To avoid confusion resulting from this ambiguity, Device Master interfaces are not identified as to “loading” or “discharge” the way Milnor machine allied interfaces (and their “signals” tables) are.

As with machine interfaces, some Device Master signals pass **numeric** values in binary and others are used individually to pass **non-numeric** (on/off) values. The receiving device can read the groups of numeric signals in any order as long as it reads this data during the window of time within which it is valid. However, because each signal within a group of numeric signals represents a specific digit of the binary number, the order of significance of the signals (**digit order**) must be understood and must match on sending and receiving devices. Most non-numeric signals provide operational information which must be exchanged according to a predetermined “handshaking” scheme. Hence, the sequence in which operational signals occur (**enabling order**) is critical. Accordingly, the signal information is presented in two tables:

1. **Numeric signals and digit order**—In this table, signals are depicted in digit order; that is, the way they would be read as a binary number. The rightmost **column** represents the signal that carries the least significant digit. Each adjacent **column** to the left is the signal representing the digit of next higher significance. The table is divided into **row** groups—one row group for each batch code provided. Each row group provides pertinent information for the signals used with that batch code.
2. **Non-numeric signals and enabling order**—In this table, each **row** represents a signal and each **column** provides pertinent information for that signal. Generally, these signals must be exchanged by the interfaced devices in the order listed. The labels given to operational signals in the schematics can vary from device to device. However, the document “Summary of Milnor Allied Interface Capability” provides generic names for these. The right-hand column of this table provides both the generic (function) name and the signal name as shown in the schematic, except where these are the same.

Table 2: Numeric Signals and Digit Order—Device Master Allied Dryer Interface

Signal name on schematic (e.g., Drycode A, B, etc.)-->		Common Conn. *	Most Significant		Dedicated Connections (Binary Data Signals)						Least Significant
			K	J	H	G	F	E	D	C	B	A
16 Drycodes (00 - 15)	Multi-terminal	n/a							TBK	TBK	TBK	TBK
	Pin Number	n/a							U • V	S • T	Q • R	L • M
	Wire Number	n/a							AAU • AAV	AAS • AAT	AAQ • AAR	AAL • AAM
	Display/code	--							**	**	**	**
	Board/code***	--							io_/6	io_/5	io_/4	io_/3

* For outputs from Device Master, Milnor does not normally assign either pin of the potential-free contace as the common. Hence, both pins have unique pin and wire numbers. In this table, these are listed together in the same cell with a dot between (e.g., U • V).

** The PC Device Master software provides an intuitive "Device Inputs and Outputs" window for viewing input/output status. See manual MTYCDR01, "Technical Reference—Using the Device Master Controller"

*** The underscore in the third character position of the board/code (e.g., io_/6) represents the board number and depends on the device number of the dryer within Device Master (which can support up to eight devices, numbered 0 through 7). For devices 0 though 7, the boards are numbered 6, 7, 8, 9, A, B,C, and D respectively. Hence, device 4 uses Device Master board A (e.g., ioA/6).

Table 3: Non-Numeric Signals and Enabling Order—Device Master Allied Dryer Interface

Signal Direction	Common Connection*			Dedicated Connection			Display / code	Board / code ***	Function Name / Signal Name
	Multi-terminal	Pin	Wire	Multi-terminal	Pin	Wire			
Input	2G	2G	2G	TBK	B	AAB	**	io_/1	load desired / dryer desires a load
Output*	TBK	W	AAW	TBK	Y	AAY	**	io_/0	loading mode / dryer allowed to load
Input	2G	2G	2G	TBK	C	AAC	**	io_/2	load allowed / load door open
Output*	TBK	X	AAX	TBK	Z	AAZ	**	io_/1	transfer complete / dryer loaded****
Input	2G	2G	2G	TBK	D	AAD	**	io_/3	transfer complete / load door closed****
Output*	TBK	N	AAN	TBK	P	AAP	**	io_/7	single cake / partial load****
Input	2G	2G	2G	TBK	E	AAE	**	io_/4	discharge desired / dryer desires discharge
Output*	TBK	H	AAH	TBK	J	AAJ	**	io_/2	discharge allowed / dryer allowed to discharge
Input	2G	2G	2G	TBK	F	AAF	**	io_/5	transfer not complete / discharge door open
Input	2G	2G	2G	TBK	G	AAG	**	io_/6	transfer complete / discharge door closed

* For outputs from Milnor, Milnor does not normally assign either pin of the potential-free contact as the common. Hence, both pins have unique pin and wire numbers.

** The PC Device Master software provides an intuitive "Device Inputs and Outputs" window for viewing input/output status. See manual MTYCDR01, "Technical Reference—Using the Device Master Controller"

*** The underscore in the third character position of the board/code (e.g., io_/6) represents the board number and depends on the device number of the dryer within Device Master (which can support up to eight devices, numbered 0 through 7). For devices 0 though 7, the boards are numbered 6, 7, 8, 9, A, B,C, and D respectively. Hence, device 4 uses Device Master board A (e.g., ioA/6).

**** The batch data outputs are set when Device Master receives the "load door open" input. The "dryer loaded" output may be used by the allied dryer as a data valid signal to indicate that batch data may now be read. When Device Master receives the "load door closed" input, it "turns off" the batch data signals.

— End of BICALC16 —

This page intentionally left blank.

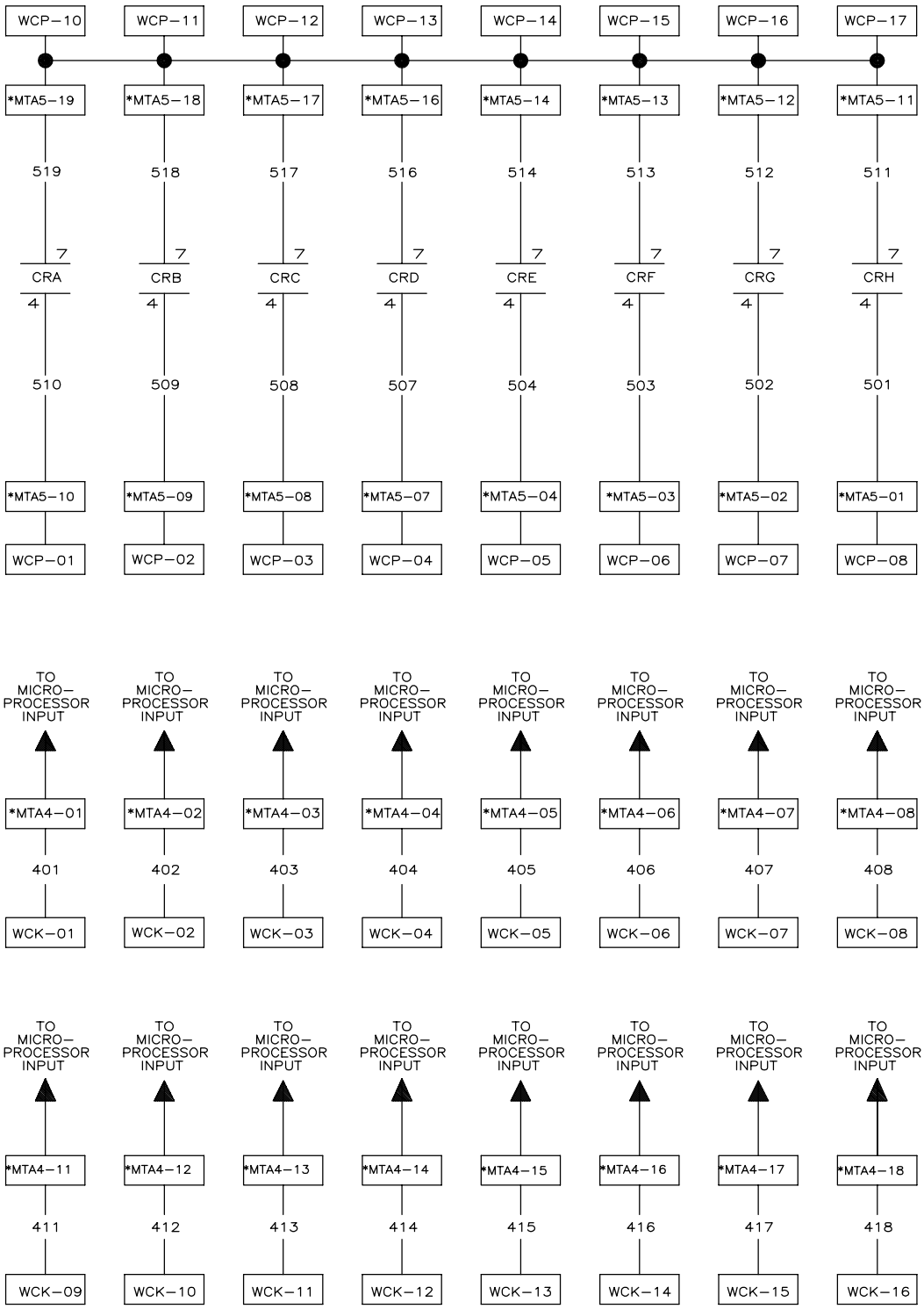

00 01 02 03 04 05 06 07 08 09 10

W6DM5AI1
2007155B

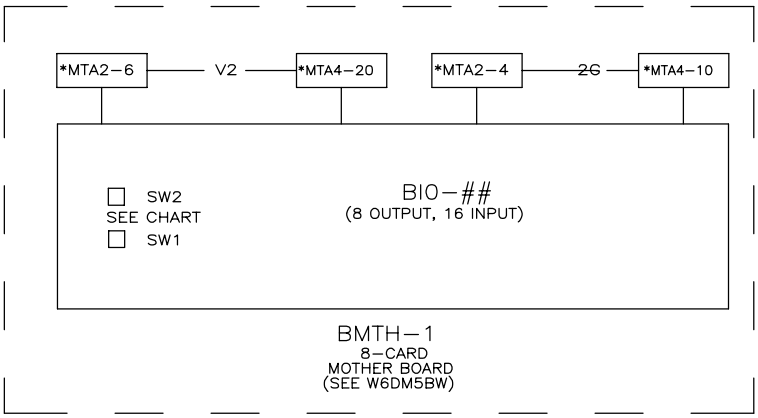

DIP SWITCH SETTING CHART		
DEVICE NUMBER	BOARD ADDRESS	
	SW2	SW1
0	0	6
1	0	7
2	0	8
3	0	9
4	0	A
5	0	B
6	0	C
7	0	D
8	8	6
9	8	7
10	8	8
11	8	9
12	8	A
13	8	B
14	8	C
15	8	D

W6DM5AI1
2007155B

INPUT TABLE		
INPUT NUMBER	INPUT NAME	INPUT FUNCTION
0	401	GOODS CODE BIT 0
1	402	GOODS CODE BIT 1
2	403	GOODS CODE BIT 2
3	404	GOODS CODE BIT 3
4	405	GOODS CODE BIT 4
5	406	GOODS CODE BIT 5
6	407	GOODS CODE BIT 6
7	408	GOODS CODE BIT 7
8	411	CUSTOMER CODE BIT 0
9	412	CUSTOMER CODE BIT 1
10	413	CUSTOMER CODE BIT 2
11	414	CUSTOMER CODE BIT 3
12	415	CUSTOMER CODE BIT 4
13	416	CUSTOMER CODE BIT 5
14	417	CUSTOMER CODE BIT 6
15	418	CUSTOMER CODE BIT 7

OUTPUT TABLE		
OUTPUT NUMBER	OUTPUT NAME	OUTPUT FUNCTION
0	CRA	---
1	CRB	WANT TO LOAD
2	CRC	READY TO LOAD
3	CRD	FINISHED LOADING
4	CRE	---
5	CRF	WANT TO DISCHARGE
6	CRG	READY TO DISCHARGE
7	CRH	FINISHED DISCHARGING

NOTE:
1. THE BOARD WIRING SHOWN IS TYPICAL. REFER TO THE DIP SWITCH SETTINGS CHART FOR THE CORRECT DIP SWITCH SETTINGS FOR EACH DEVICE.
2. THE ASTERISK (*) IN THE MTA DESIGNATION REPRESENTS THE BOARD ADDRESS AS GIVEN IN THE DIP SWITCH SETTING CHART.
3. REFER TO THE OUTPUT TABEL FOR A FUNCTIONAL DESCRIPTION OF THE OUTPUTS FOR EACH BOARD ADDRESS.
4. REFER TO THE INPUT TABLE FOR A FUNCTIONAL DESCRIPTION OF THE INPUTS FOR EACH BOARD ADDRESS.

W6DM5AI1

MICRO 6 SYSTEMS
DEVICE MASTER
SCHEMATIC: ALLIED INTERFACE FOR LINEAR COSTA
(8 OUTPUT – 16 INPUT)

PELLERIN MILNOR CORPORATION

11 12 13 14 15 16 17

W6DM5AI1
2007155B

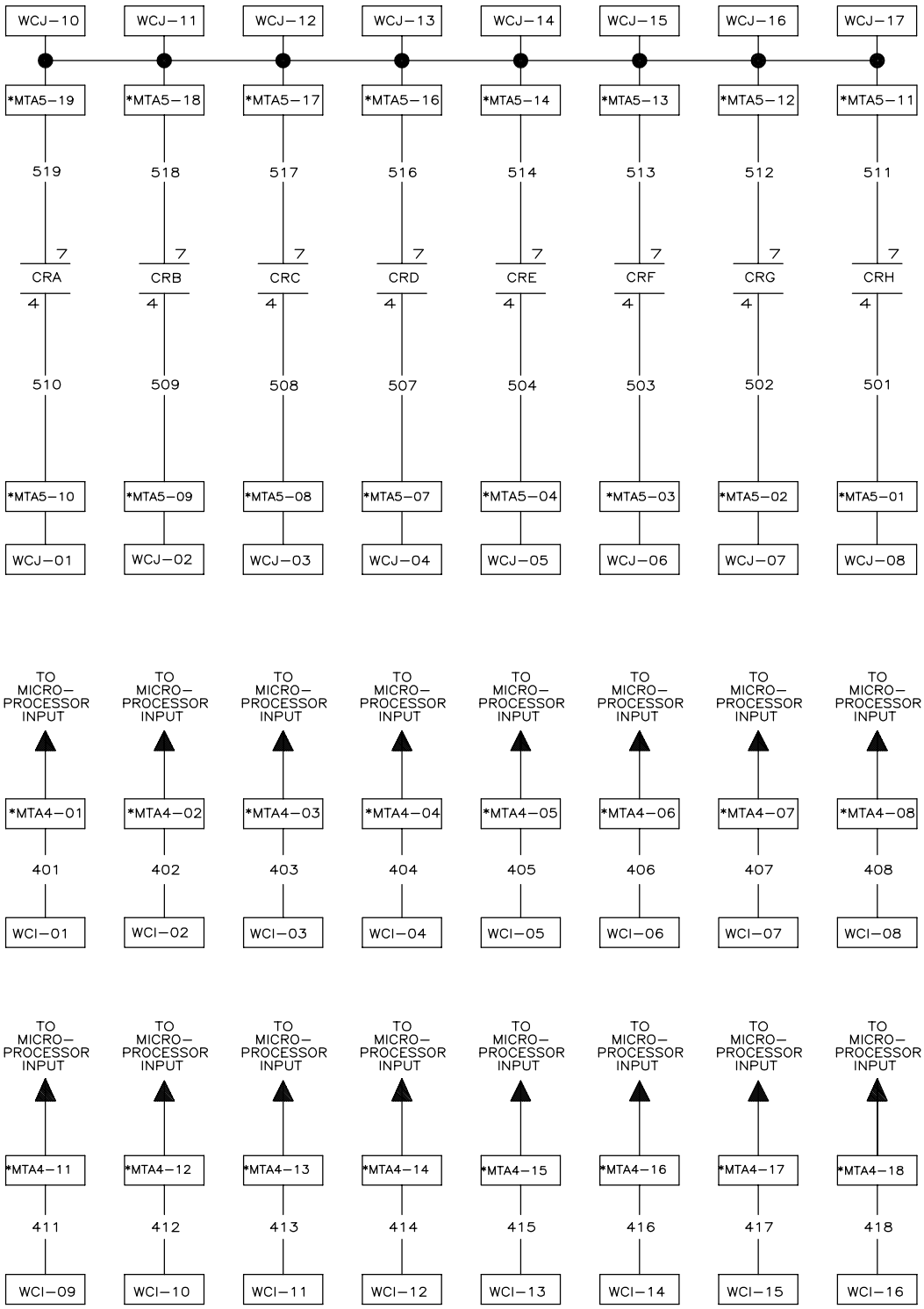

W6DM5AI2
2007155B

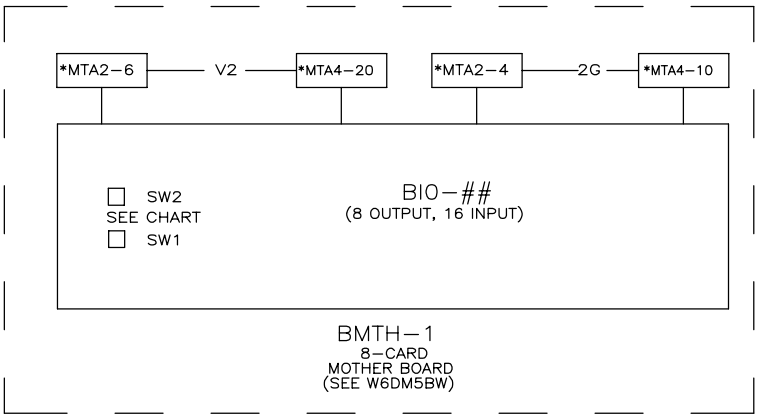

DIP SWITCH SETTING CHART		
DEVICE NUMBER	BOARD ADDRESS	
	SW2	SW1
0	4	0
1	4	1
2	4	2
3	4	3
4	4	4
5	4	5
6	4	6
7	4	7
8	C	0
9	C	1
10	C	2
11	C	3
12	C	4
13	C	5
14	C	6
15	C	7

W6DM5AI2
2007155B

INPUT TABLE		
INPUT NUMBER	INPUT NAME	INPUT FUNCTION
0	401	DRY CODE BIT 0
1	402	DRY CODE BIT 1
2	403	DRY CODE BIT 2
3	404	DRY CODE BIT 3
4	405	DESTINATION BIT 0
5	406	DESTINATION BIT 1
6	407	DESTINATION BIT 2
7	408	DESTINATION BIT 3
8	411	GET READY TO LOAD
9	412	START LOADING
10	413	GET READY TO DISCHARGE
11	414	START DISCHARGING
12	415	SINGLE CAKE
13	416	---
14	417	---
15	418	ALLIED TRANFER CANCELLED

OUTPUT TABLE		
OUTPUT NUMBER	OUTPUT NAME	OUTPUT FUNCTION
0	CRA	DRY CODE BIT 0
1	CRB	DRY CODE BIT 1
2	CRC	DRY CODE BIT 2
3	CRD	DRY CODE BIT 3
4	CRE	DESTINATION BIT 0
5	CRF	DESTINATION BIT 1
6	CRG	DESTINATION BIT 2
7	CRH	DESTINATION BIT 3

NOTE:
1. THE BOARD WIRING SHOWN IS TYPICAL. REFER TO THE DIP SWITCH SETTINGS CHART FOR THE CORRECT DIP SWITCH SETTINGS FOR EACH DEVICE.
2. THE ASTERISK (*) IN THE MTA DESIGNATION REPRESENTS THE BOARD ADDRESS AS GIVEN IN THE DIP SWITCH SETTING CHART.
3. REFER TO THE OUTPUT TABEL FOR A FUNCTIONAL DESCRIPTION OF THE OUTPUTS FOR EACH BOARD ADDRESS.
4. REFER TO THE INPUT TABLE FOR A FUNCTIONAL DESCRIPTION OF THE INPUTS FOR EACH BOARD ADDRESS.

W6DM5AI2
MICRO 6 SYSTEMS
DEVICE MASTER
SCHEMATIC: ALLIED INTERFACE FOR LINEAR COSTA
(8 OUTPUT – 16 INPUT)
PELLERIN MILNOR CORPORATION

11 12 13 14 15 16 17

W6DM5AI2
2007155B

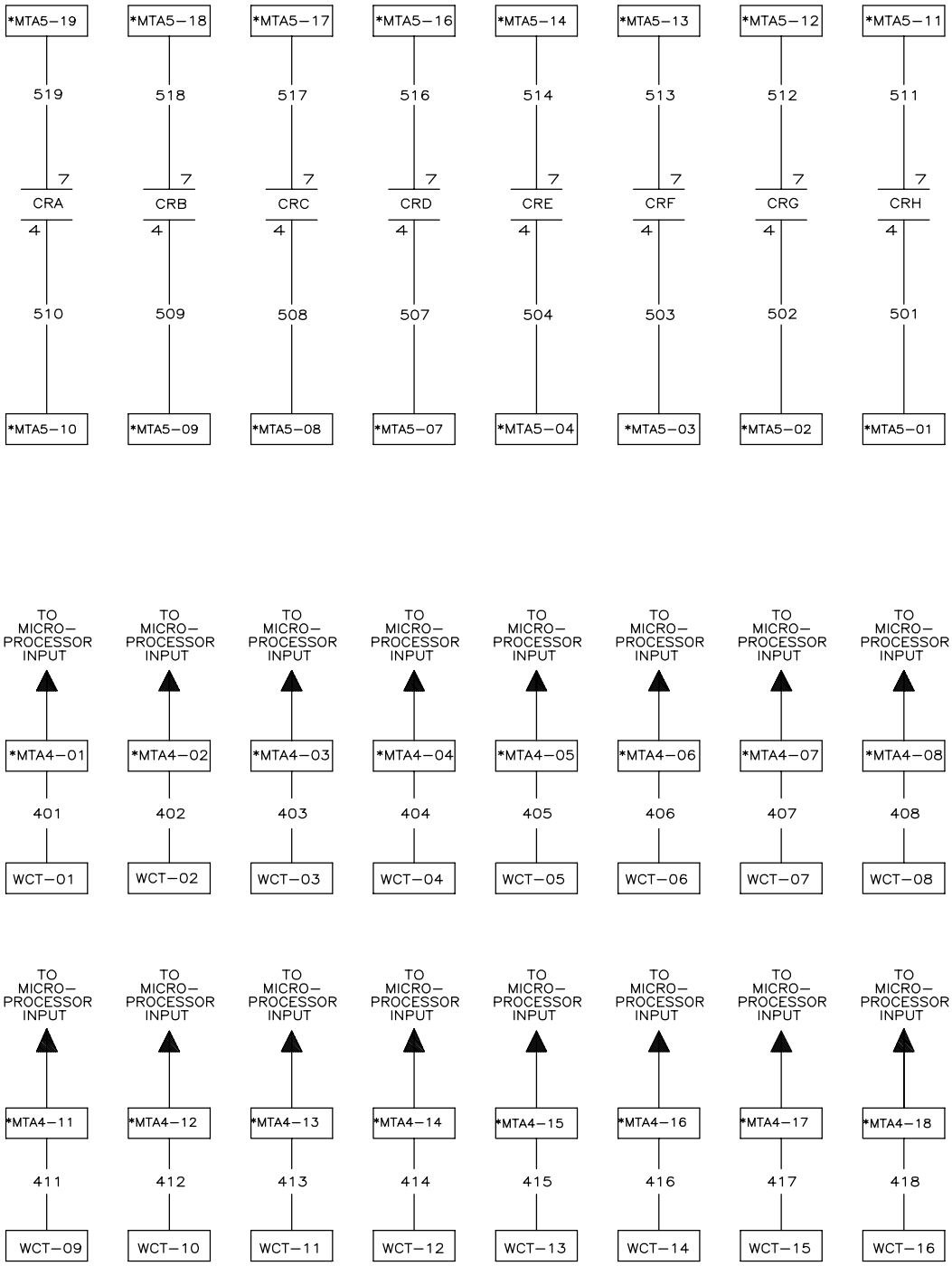

00 01 02 03 04 05 06 07 08 09 10

W6DM5DI
2007155B

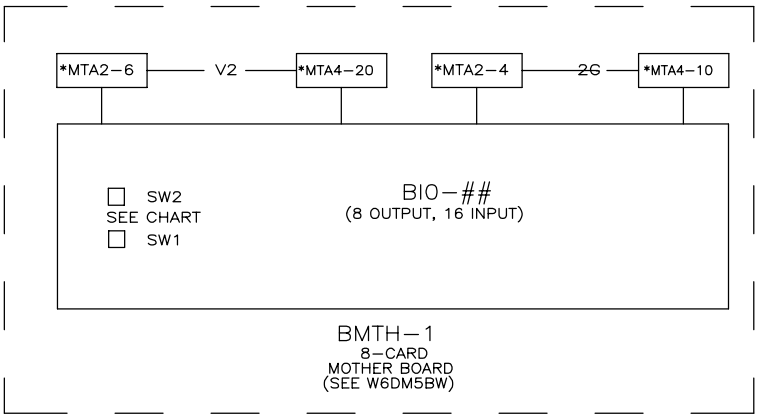

W6DM5DI
2007155B

INPUT TABLE			
INPUT NUMBER	OUTPUT INPUT	INPUT FUNCTION	INPUT VALUE
0	401	ALLIED WEIGHT BIT 0	1
1	402	ALLIED WEIGHT BIT 1	2
2	403	ALLIED WEIGHT BIT 2	4
3	404	ALLIED WEIGHT BIT 3	8
4	405	ALLIED WEIGHT BIT 4	16
5	406	ALLIED WEIGHT BIT 5	32
6	407	ALLIED WEIGHT BIT 6	64
7	408	ALLIED WEIGHT BIT 7	128
8	411	NOT USED	---
9	412		---
10	413		---
11	414		---
12	415		---
13	416		---
14	417		---
15	418		---

DIP SWITCH SETTING CHART		
DEVICE NUMBER	BOARD ADDRESS	
	SW2	SW1
0	4	8
1	4	9
2	4	A
3	4	B
4	4	C
5	4	D
6	4	E
7	4	F
8	C	8
9	C	9
10	C	A
11	C	B
12	C	C
13	C	D
14	C	E
15	C	F

NOTE:
1. THE BOARD WIRING SHOWN IS TYPICAL. REFER TO THE DIP SWITCH SETTINGS CHART FOR THE CORRECT DIP SWITCH SETTINGS FOR EACH DEVICE.
2. THE ASTERISK (*) IN THE MTA DESIGNATION REPRESENTS THE BOARD ADDRESS AS GIVEN IN THE DIP SWITCH SETTING CHART.
3. TOTAL WEIGHT EQUALS THE SUM OF THE VALUES OF EACH ACTIVE INPUT. REFER TO THE INPUT TABLE FOR THE SPECIFIC INPUT VALUES.
4. THE OUTPUTS FOR THESE BOARDS ADDRESSES ARE NOT CURRENTLY USED.

W6DM5DI
MICRO 6 SYSTEMS
DEVICE MASTER
SCHEMATIC: ALLIED WEIGHT INPUTS
(8 OUTPUT – 16 INPUT)
PELLERIN MILNOR CORPORATION

11 12 13 14 15 16 17

W6DM5DI
2007155B

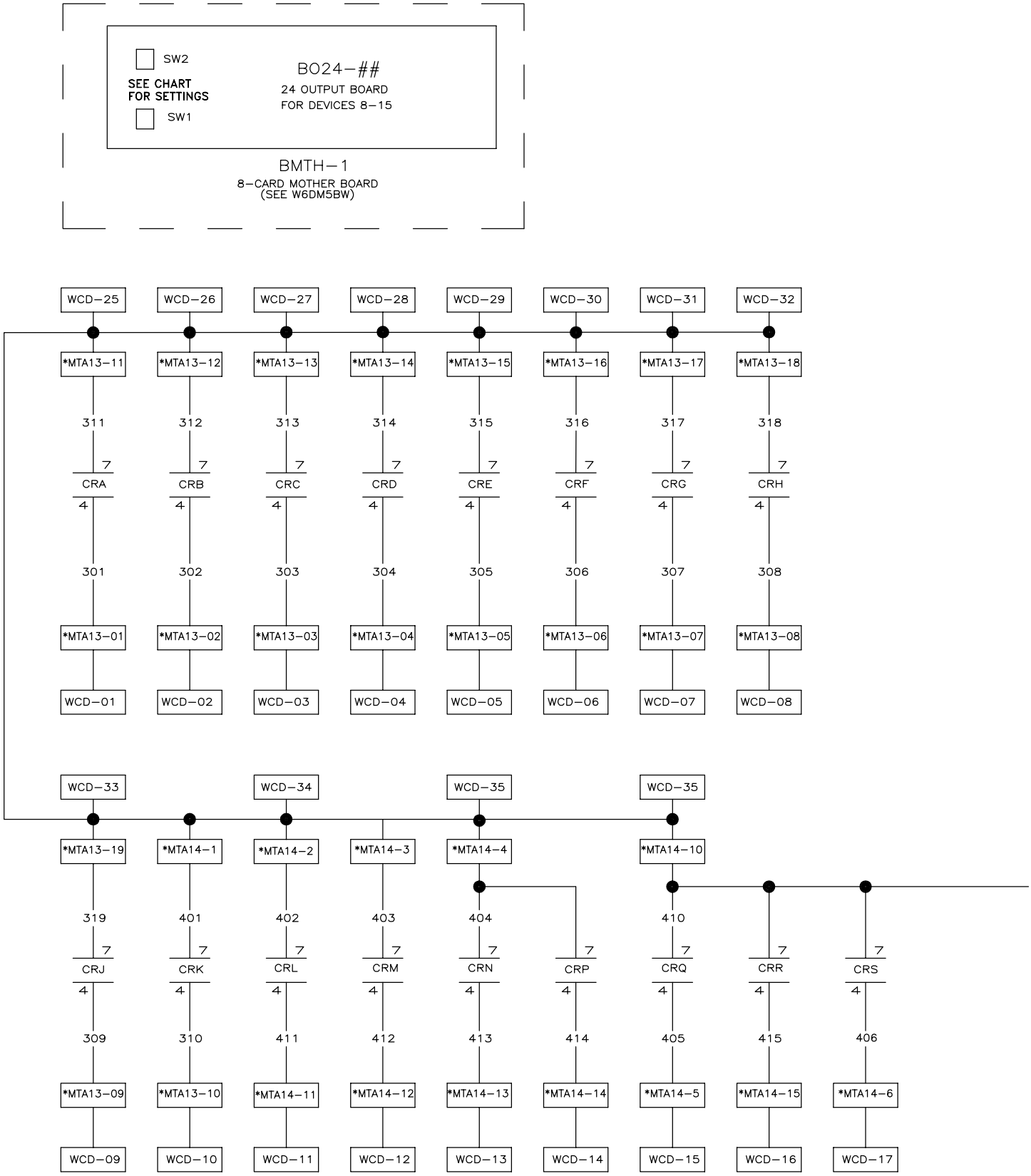

W6DM5DP
2007155B

W6DM5DP

MICRO 6 SYSTEMS
SCHEMATIC: DEVICE MASTER DRY CONTACTS
DATA PASS (24 OUTPUT)

PELLERIN MILNOR CORPORATION

OUTPUT TABLE

OUTPUT NUMBER	OUTPUT NAME	OUTPUT FUNCTION
0	CRA	ALLIED DATA BIT 0
0	CRB	ALLIED DATA BIT 1
0	CRC	ALLIED DATA BIT 2
0	CRD	ALLIED DATA BIT 3
0	CRE	ALLIED DATA BIT 4
0	CRF	ALLIED DATA BIT 5
0	CRG	ALLIED DATA BIT 6
0	CRH	ALLIED DATA BIT 7
0	CRJ	ALLIED DATA BIT 8
0	CRK	ALLIED DATA BIT 9
0	CRL	ALLIED DATA BIT 10
0	CRM	ALLIED DATA BIT 11
0	CRN	ALLIED DATA BIT 12
0	CRP	ALLIED DATA BIT 13
0	CRQ	ALLIED DATA BIT 14
0	CRR	ALLIED DATA BIT 15
0	CRS	ALLIED DATA BIT 16
0	CRT	ALLIED DATA BIT 17
0	CRU	ALLIED DATA BIT 18
0	CRV	ALLIED DATA BIT 19
0	CRW	ALLIED DATA BIT 20
0	CRX	ALLIED DATA BIT 21
0	CRY	ALLIED DATA BIT 22
0	CRZ	ALLIED DATA BIT 23

DIP SWITCH SETTINGS

DEVICE NUMBER	BOARD ADDRESS	
	SW2	SW1
0	1	2
1	1	3
2	1	4
3	1	5
4	1	6
5	1	7
6	1	8
7	1	9
8	9	2
9	9	3
10	9	4
11	9	5
12	9	6
13	9	7
14	9	8
15	9	9

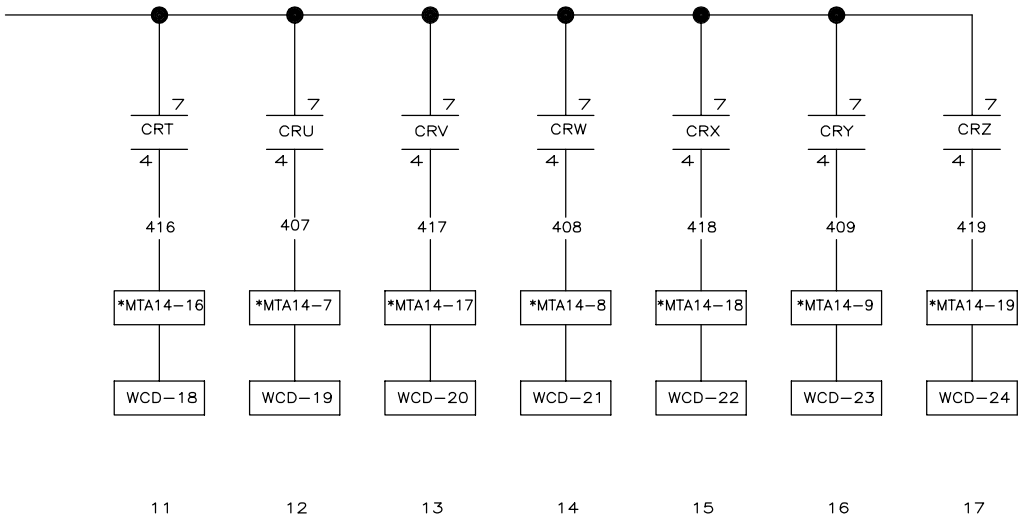

NOTE:
1. THE BOARD WIRING SHOWN IS TYPICAL. REFER TO THE DIP SWITCH SETTING CHART FOR CORRECT DIP SWITCH SETTING FOR EACH DEVICE
2. THE ASTERISK (*) IN THE MTA DESIGNATION REPRESENTS THE BOARD ADDRESS AS GIVEN ON THE OUTPUT TABLE
3. ALLIED DATA PASS OUTPUTS ARE CONFIGURABLE, FROM MOST TO LEAST SIGNIFICANT. IN ORDER OF FORMULA, DRY CODE, DESTINATION, CUSTOMER, GOODS CODE, AND CAKE NUMBER. UP TO 16 OUTPUTS MAY BE ASSIGNED TO ANY ONE PARAMETER. ALL DATA IS OUTPUT IN STANDARD BINARY FORMAT.

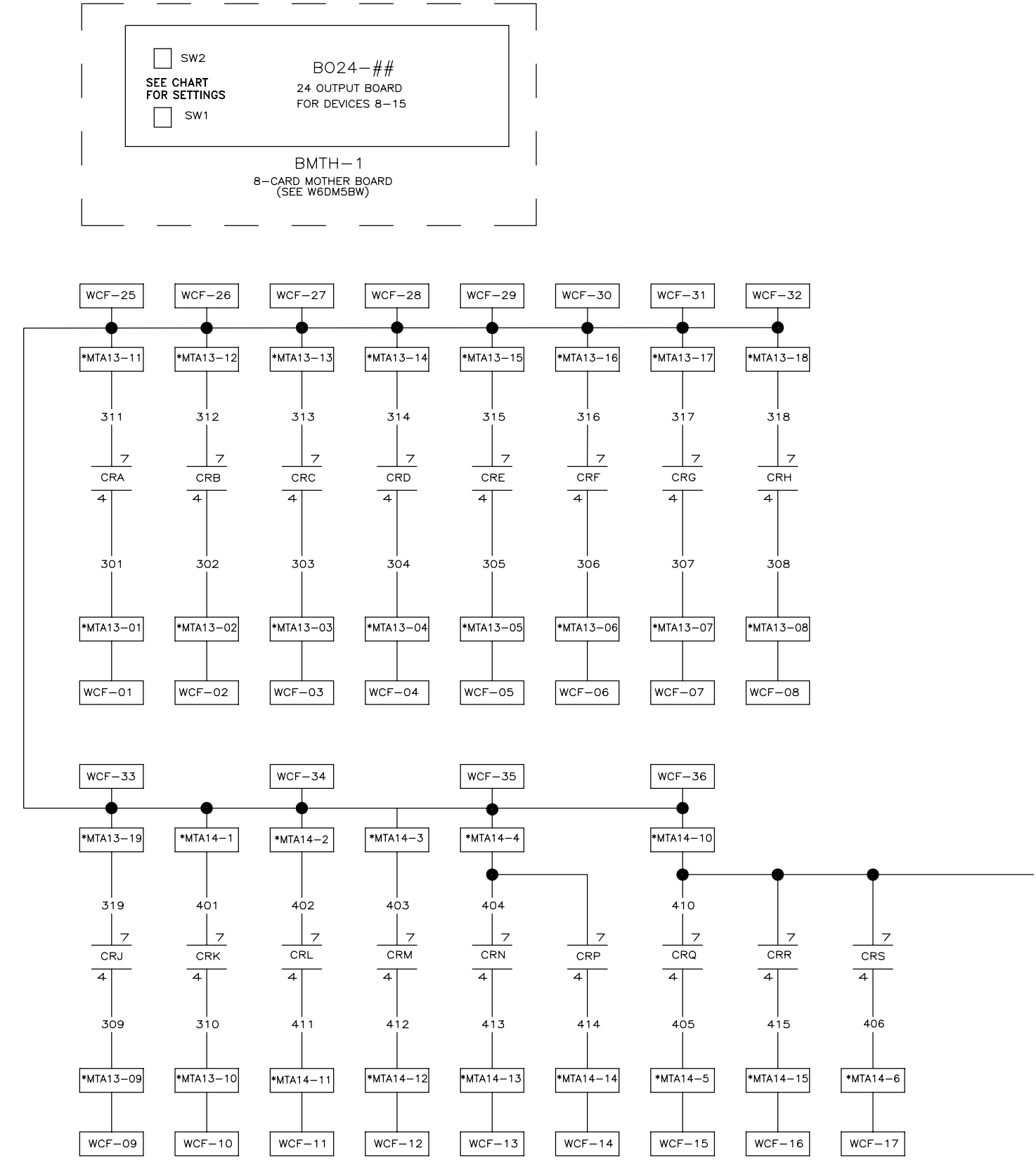

W6DM5DW
2007155B

W6DM5DW

MICRO 6 SYSTEMS
SCHEMATIC: DEVICE MASTER DRY CONTACTS
ALLIED WEIGHT OUTPUTS (24 OUTPUT)

PELLERIN MILNOR CORPORATION

OUTPUT TABLE

OUTPUT NUMBER	OUTPUT NAME	OUTPUT FUNCTION	OUTPUT VALUE
0	CRA	ALLIED WEIGHT BIT 0	1
0	CRB	ALLIED WEIGHT BIT 1	2
0	CRC	ALLIED WEIGHT BIT 2	4
0	CRD	ALLIED WEIGHT BIT 3	8
0	CRE	ALLIED WEIGHT BIT 4	16
0	CRF	ALLIED WEIGHT BIT 5	32
0	CRG	ALLIED WEIGHT BIT 6	64
0	CRH	ALLIED WEIGHT BIT 7	128
0	CRJ	ALLIED WEIGHT BIT 8	256
0	CRK	ALLIED WEIGHT BIT 9	512
0	CRL	ALLIED WEIGHT BIT 10	1024
0	CRM	ALLIED WEIGHT BIT 11	2048
0	CRN	NOT USED	---
0	CRP		---
0	CRQ		---
0	CRR		---
0	CRS		---
0	CRT		---
0	CRU		---
0	CRV		---
0	CRW		---
0	CRX		---
0	CRY		---
0	CRZ		---

DIP SWITCH SETTINGS

DEVICE NUMBER	BOARD ADDRESS	
	SW2	SW1
0	5	2
1	5	3
2	5	4
3	5	5
4	5	6
5	5	7
6	5	8
7	5	9
8	D	2
9	D	3
10	D	4
11	D	5
12	D	6
13	D	7
14	D	8
15	D	9

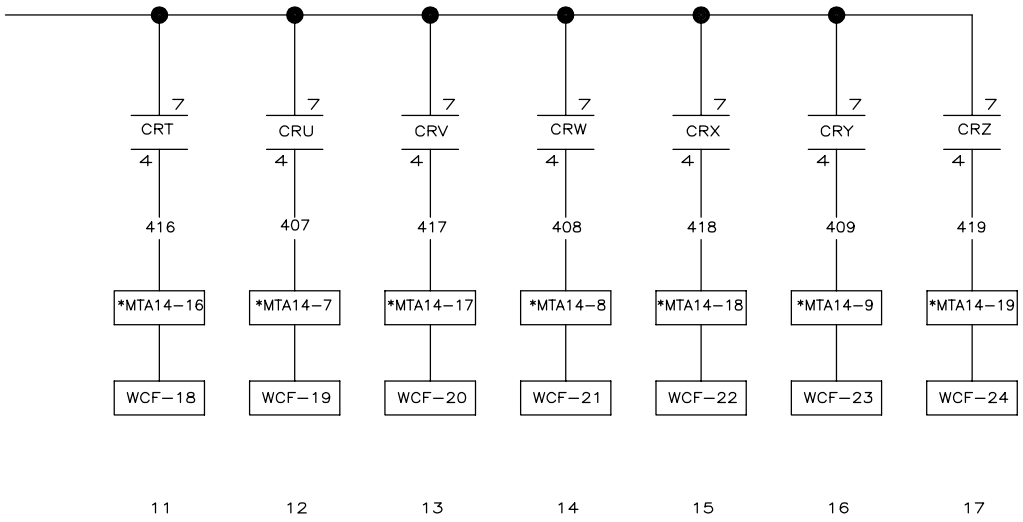

NOTE:
1. THE BOARD WIRING SHOWN IS TYPICAL. REFER TO THE DIP SWITCH SETTING CHART FOR CORRECT DIP SWITCH SETTING FOR EACH DEVICE
2. THE ASTERISK (*) IN THE MTA DESIGNATION REPRESENTS THE BOARD ADDRESS AS GIVEN ON THE OUTPUT TABLE
3. TOTAL WEIGHT EQUALS THE SUM OF THE VALUES OF EACH ACTIVE OUTPUT. REFER TO THE OUTPUT TABLE FOR THE WHOLE NUMBER (ONES) FORMAT. FOR TENTH FORMAT, MULTIPLY EACH VALUE BY 0.1.

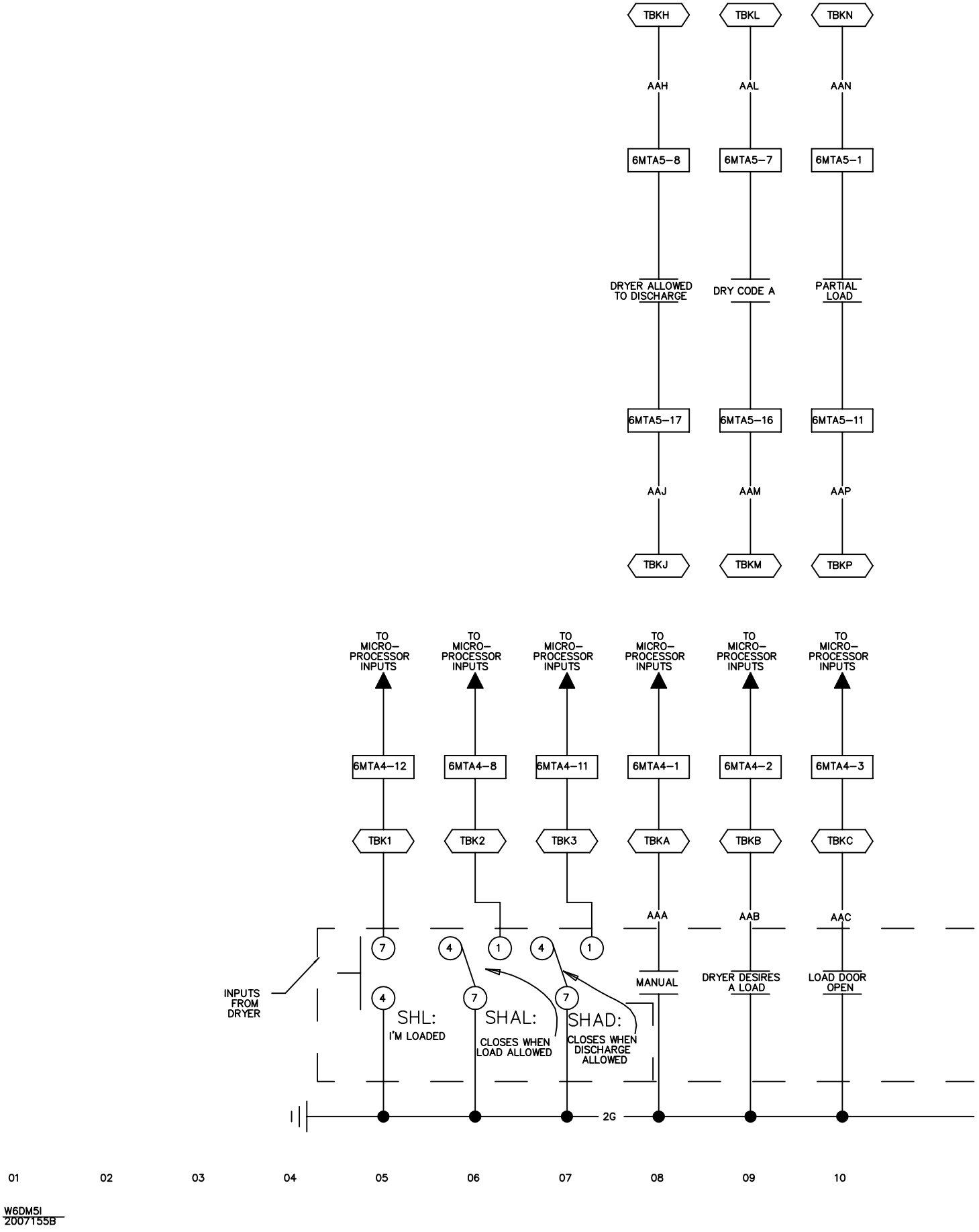
TBKH
TBKL
TBKN
AAH
AAL
AAN
6MTA5–8
6MTA5–7
6MTA5–1
DRYER ALLOWED TO DISCHARGE
DRY CODE A
PARTIAL LOAD
6MTA5–17
6MTA5–16
6MTA5–11
AAJ
AAM
AAP
TBKJ
TBKM
TBKP
TO MICRO–PROCESSOR INPUTS
6MTA4–12
6MTA4–8
6MTA4–11
6MTA4–1
6MTA4–2
6MTA4–3
TBK1
TBK2
TBK3
TBKA
TBKB
TBKC
AAA
AAB
AAC
MANUAL
DRYER DESIRES A LOAD
LOAD DOOR OPEN
INPUTS FROM DRYER
SHL:
I'M LOADED
SHAL:
CLOSES WHEN LOAD ALLOWED
SHAD:
CLOSES WHEN DISCHARGE ALLOWED
2G
01
02
03
04
05
06
07
08
09
10
W6DM5I
2007155B

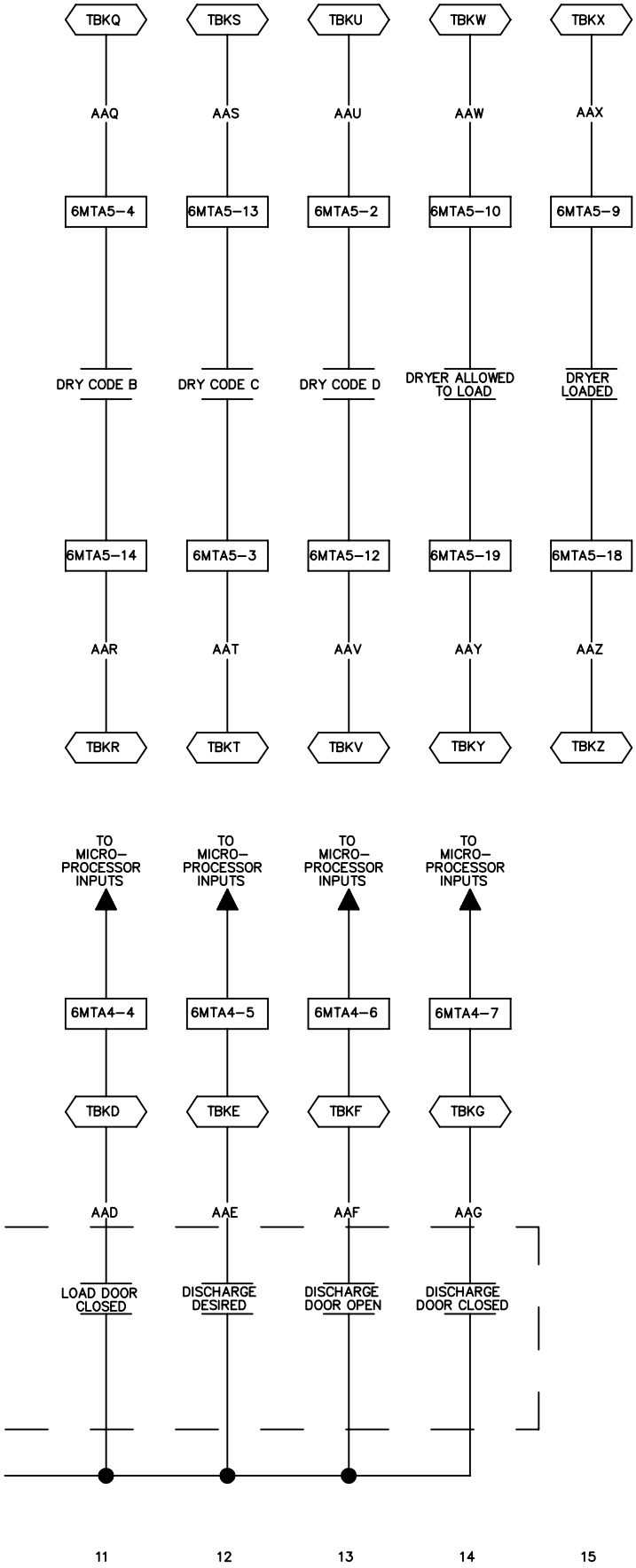

DIP SWITCH SETTING CHART		
DEVICE NUMBER	BOARD ADDRESS	
	SW2	SW1
0	0	6
1	0	7
2	0	8
3	0	9
4	0	A
5	0	B
6	0	C
7	0	D
8	8	6
9	8	7
10	8	8
11	8	9
12	8	A
13	8	B
14	8	C
15	8	D

W6DM5I

SCHEMATIC: INPUTS FOR DRYER CONTROLLED BY DEVICE MASTER

PELLERIN MILNOR CORPORATION