Published Manual Number/ECN: ME76CBW3AE/2025142A
- **Publishing System: TPAS2**
- **Access date: 04/03/2025**
- **Document ECNs: Latest**

Schematic/Electrical Parts

76028, 76039G3 & 92048G4

CBW® Continous Batch Washer System

Mark 9 Controls

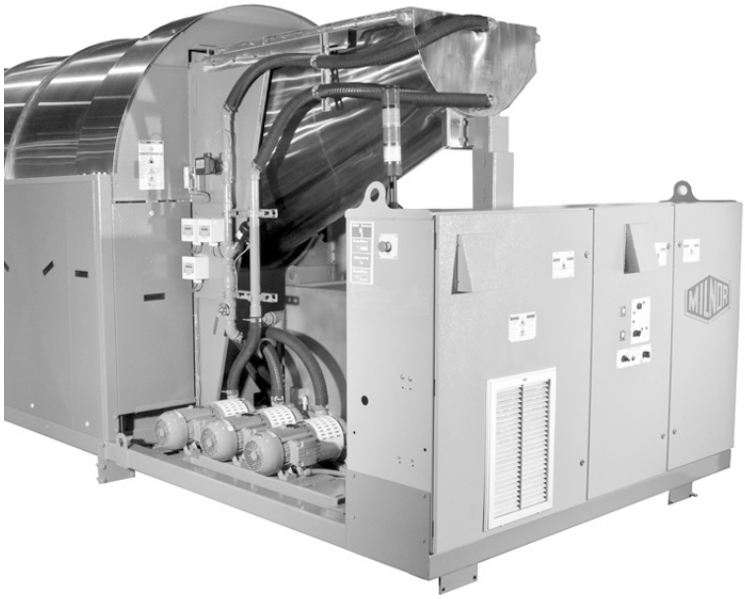

Read the separate safety manual before installing, operating, or servicing

PELLERIN MILNOR CORPORATION POST OFFICE BOX 400, KENNER, LOUISIANA 70063-0400, U.S.A.

Table of Contents
ME76CBW3AE/25142A

Page	Description	Document
1	Component Parts List	W9CBW3PL/2025142N
31	Limited Standard Warranty	BMP720097/2019036
32	How to Get the Necessary Repair Components	BIUUUD19/20081231
33	Safety—Continuous Batch Washer	BIUUUS27PC/20051111
39	CBW to Press System Connections	MSIN0911AE/1998247N
41	Special Load Interface Requirements for the Milnor Centrifugal Extractor	BICXUI01/20021226
44	Milnor Allied Interface Specifications and Signals, CBW	BICALC02CL/20041008
57	HELMS Data Interface	BNTUUI02/2021152
60	How to Use Milnor® Electrical Schematic Diagrams	BIUUUK01/20130308
72	Sample Schematic	BMP010012/2018343
74	3 Phase Motor Connection Diagram	BMP850029/1999362B
75	3P Motor Diagram-Multivolt	W80008/2001253A
76	Cable Routings	W9CBW3CC/1999133B
78	Control Box Layouts Sheet 1	W9CBW3TG1/2009173B
80	Control Box Layouts Sheet 2	W9CBW3TG2/2009173B
82	Control Box Layouts Sheet 3	W9CBW3TG3/2009173B
84	Control Box Layouts Sheet 4	W9CBW3TG4/2024445B
86	Control Box Field Wiring Hook-Ups	W9CBW3TG5/2002045B
88	Inverter Box Layout	W9CBW3TG6/2019122B
90	Main Control Box-Left	W9CBW3TG7/2019122B
92	Main Control Box-Center	W9CBW3TG8/2019122B
94	Control Box Layouts	W9CBW3TG9/2019122B
96	Allied Interface	W9CBW3AI/2019122B
98	Allied Interface Weight Inputs	W9CBW3AW/2021123B
100	Chemical Add Opitons	W9CBW3CA/1999133B
102	Drive Contactors	W9CBW3DA/2022136B
104	Variable Speed Drive Dyanmic Braking Resistors	W9CBW3DB/2013063B
106	Drive Contactors for Baldor Drive	W9CBW3DC/1999521B
108	Dynamic Braking Resistors for Baldor Drive	W9CBW3DD/1999521B
110	Long Distance Incompatibility	W9CBW3FA/2011432B
112	Press/Extractor Lg Distance Incompatibility	W9CBW3FAA/2004076B
114	Dual Bath	W9CBW3FB/2025142B
116	Main Flow / Flow Stop	W9CBW3FC/2018192B
118	Flow/Flow Not Option	W9CBW3FN/1999193B
120	Flow/Flow Not Option for PulseFlow	W9CBW3FNA/2010243B
122	Steam Disinfect	W9CBW3FS/2025142B
124	Overhead Fill Tank or Dual fill	W9CBW3FT/2016494B
126	Interpert Relay Boards	W9CBW3IA/1999286B

Table of Contents, continued
ME76CBW3AE/25142A

Page	Description	Document
128	Interpret Relays	W9CBW3IB/2004364B
130	Module Controls Boards Wiring	W9CBW3JA/2011432B
132	Typical 8/16 Board Inputs/Outputs	W9CBW3JB/2023202B
134	Module Inputs/Outputs	W9CBW3JC/2016122B
136	Typical 24 Output Board Wiring	W9CBW3JD/2003445B
138	Conductivity / PH probe wiring	W9CBW3JE/2016033B
140	Flush Enhance/Quick Refill	W9CBW3JH/1999133B
142	Loading Flush Pump Interface	W9CBW3LA/2023214B
144	Loading Conlo/Conwa Controls	W9CBW3LB/2025142B
146	CONLO/CONWA Controls w/ Inverter	W9CBW3LBA/2025142B
148	Loading Conlo/Conwa Controls W/Lamp Test	W9CBW3LBB/2025142B
150	Loading-Conwa Lights	W9CBW3LC/2002453B
152	Loading-Conwa Lights	W9CBW3LCA/2014385B
154	Loading-CONWA LED Lights W/Lamp Lights	W9CBW3LCB/2019245B
156	Conlo/Conwa Bag Inputs	W9CBW3LD/2025142B
158	Loading Flush Pump+Drain & CD	W9CBW3LF/2021123B
160	Flush Valves	W9CBW3LG/1999133B
162	Load Chute Flaps	W9CBW3LH/2017413B
164	Intermediate Loading Conveyor	W9CBW3LI/2021074B
166	Load Flush with PulseFlow	W9CBW3LP/2023215B
168	PulseFlow Tank to Load Chute	W9CBW3LP1/2011432B
170	PulseFlow Mod. to Mod.Closes to Load End	W9CBW3LP2/2023202B
172	PulseFlow Tank to Last Zone	W9CBW3LP3/2018192B
174	PulseFlow Mod. to Mod.-Closes to Disch. End	W9CBW3LP4/2023202B
176	PulseFlow Light Stand	W9CBW3LP5/2015184B
178	Pulse Flow Light Stand + Lamp Test	W9CBW3LP5A/2019245B
180	PulseFlow slow down speed	W9CBW3LP6/2015505B
182	Alternate Pulse Flow Pump	W9CBW3LPA/2023412B
184	Alternate Pulse Flow Modules 1-8	W9CBW3LPA1/2013413B
186	Alternate Pulse Flow Modules 9-10	W9CBW3LPA2/2013355B
188	Loading Flush With Pulse Flow + Lamp Test	W9CBW3LPB/2023412B
190	Load Flush with PulseFlow, Dual Tank	W9CBW3LPD/2023412B
192	Pulse Flow Dual Tank	W9CBW3LP1D/2018305B
194	Dual Pulse Flow Tank, 2 Pumps	W9CBW3LP2D/2023202B
196	Dual Pulse Flow Tank, 2 Pumps	W9CBW3LP3D/2023202B
198	Dual Loading Flush with PulseFlow, 2 Pumps	W9CBW3LP4D/2023215B
200	Mentor Controls	W9CBW3NA/2018406B
202	Mentor Control W/Lamp Test	W9CBW3NAA/2019245B
204	Mentor Board Wiring	W9CBW3NB/2011432B

Table of Contents, continued
ME76CBW3AE/25142A

Page	Description	Document
206	Mentor Board Wiring w/ solid state PC	W9CBW3NBA/2016146B
208	Mentor Board Wiring w/ solid state PC+Moxa card	W9CBW3NBB/2021025B
210	4 Load Cells	W9CBW3NBD/2022404B
212	iMX6 Mentor Controller	W9CBW3NBE/2022404B
214	Mentor Microprocessor Inputs	W9CBW3NC/2016202B
216	Mentor Diagnostic LCD Display	W9CBW3ND/2001314B
218	Optional Flashing Signal	W9CBW3NFS/2016194B
220	Reuse Tank to Drain Wiring	W9CBW3RA/2003236B
222	Standard I/O Outputs	W9CBW3SA/1999193B
224	Standard I/O Outputs (Sheet 2)	W9CBW3SB/2021025B
226	Shaker Screen Interface<12-1-2018	W9CBW3SC/2019033B
228	Shaker Screen Interface >12-1-2018	W9CBW3SCA/2019044B
230	Emergency Stops	W9CBW3SD/2019384B
232	Proximity Switches	W9CBW3SE/2009196B
234	Remote Goods/Formula Selector	W9CBW3SF/2016113B
236	Std I/O Board Wiring	W9CBW3SG/1999286B
238	Remote Customer Selector	W9CBW3SH/2019136B
240	Selection Of 2 Defferent Rotation Arcs	W9CBW3SJ/1999193B
242	Modulating Water Valves W/ Flow Meters	W9CBW3SK/2024453B
244	Vent Fans	W9CBW3VF/2021183B
246	Power Distribution-Non Pulse Flow	W9CBW3WA/2018195B
248	Power Distribution for Inverter Driven Ld Conveyor	W9CBW3WAA/2009153B
250	Power Distribution-PULSE FLOW	W9CBW3WAB/2019136B
252	600V CBW with Inverter	W9CBW3WB/2023404B
254	Wash Water Flow Lifter Control	W9CBW3ZA/2019384B
256	Rinse Zone Control Circuit	W9CBW3ZB/1999321B
258	Rinse Zone Control Power	W9CBW3ZC/1999133B
260	Drain Flowsplitter	W9CBW3ZD/1999133B
262	Wash Water Flow Lifter Control With Drain	W9CBW3ZE/2007104B
264	Work Wear Module For Rinse Zone	W9CBW3ZF/1999321B
266	Rinse Zone Control Circuit With Drain No Surplus Pump	W9CBW3ZG/1999321B
268	Hold Tank Wiring	W9CBW3ZH/2019513B
270	Autobrush For Flowsplitter	W9CBW3ZJ/1999193B
272	Rinse Zone W/ Drain & Reuse Tank	W9CBW3ZW/1999321B
275	**1. Maestro Modifications**	
276	Control Operation Tank A	WINSMEWA/2004374B
278	Control Operation Tank A	WINSMEWAA/2004374B
280	Control Operation Tank B	WINSMEWB/2004374B
282	Control Operation Tank C	WINSMEWC/2004374B

Table of Contents, continued
ME76CBW3AE/25142A

Page	Description	Document
284	Loading-Flush Pump Workwear	WINSMEWD/2004374B
286	Module Drains to Sewer/Tanks	WINSMEWE/2004374B
288	Drain Header	WINSMEWEA/2004374B
291	**2. Lint Controller**	
292	Component Parts List	W6LINTCONP/2017444N
294	Control Box Layouts	W6LINTCONT/2017444B
296	Board to board wiring	W6LINTCON1/2017444B
298	Lint Tank to Module Pump	W6LINTCON2/2017473B
300	Module to Lint Tank	W6LINTCON3/2017444B
302	Inputs/Outputs	W6LINTCON4/2017444B
304	Magnetic Flow Meter	W6LINTCON5/2017444B
306	Light Stand	W6LINTCON6/2017444B
308	Lint Tank Level	W6LINTCON7/2017444B

COMPONENT PARTS LIST

W9CBW3PL/2025142N

COMPONENT NUMBER	FUNCTION OF THIS COMPONENT	WHERE TO FIND THIS COMPONENT	MILNOR P/N	DESCRIPTION	LOCATION
	>>CONTROL BOX LAYOUTS				
01	DETAIL-MENTOR FRONT PANEL	W9CBW3TG1	B2TAG99014	MENTOR CONTROL PANEL	SEE FUNCTION
02	DETAIL-MENTOR BACK PANEL	W9CBW3TG1	B2TAG99013	MENTOR POWER ENABLE PANEL	SEE FUNCTION
03	DETAIL-FLUSH TANK INTERFACE BOX	W9CBW3TG1	B2TAG99011	FLUSH TANK INTERFACE BOX	SEE FUNCTION
04	DETAIL-MAIN C-BOX RIGHT (MODULE)SEC.	W9CBW3TG2	B2TAG99017	G3 CBW MAIN C-BOX RIGHT	SEE FUNCTION
05	DETAIL-MAIN C-BOX LEFT (STD OUT) SEC	W9CBW3TG2	B2TAG99018	G3 CBW MAIN C-BOX LEFT	SEE FUNCTION
06	DETAIL-MAIN C-BOX MIDDLE (DRIVE) SEC.	W9CBW3TG3	B2TAG99009	G3 CBW MAIN C-BOX MIDDLE	SEE FUNCTION
07	DETAIL-INTERPRET RELAY BOX	W9CBW3TG3	B2TAG99012	INTERPRET RELAY BOX	SEE FUNCTION
08	DETAIL CONWA/CONLO BOX	W9CBW3TG4	B2TAG92059	CONWA/CONLO CONTROL BOX	SEE FUNCTION
09	DETAIL RINSE ZONE BOX	W9CBW3TG4	B2TAG91057	MK8 CBW RINSE ZONE BOX	SEE FUNCTION
10	DETAIL WASH WATER FLOW LIFTER	W9CBW3TG4	B2TAG91058	MK8 CBW WASH WATER FLOW LIFTER	SEE FUNCTION
11	DETAIL-MAIN C-BOX LEFT (PULSE FLW)	W9CBW3TG7	B2T2010013	CBW PULSE FLOW INVERTER CONTROLS	SEE FUNCTION
12	DETAIL-MAIN C-BOX CENTER(PULSE FLW)	W9CBW3TG8	B2T2010016	PULSE FLOW CONTROLS MIDDLE SECTION	SEE FUNCTION
13	DETAIL-MAIN C-BOX CENTER(PULSE FLW)	W9CBW3TG8	B2T2010012	PULSE FLOW CONTROLS MIDDLE SECTION	SEE FUNCTION
14	DETAIL-MAIN C-BOX RIGHT(PULSE FLW)	W9CBW3TG9	B2T2010014	PULSE FLOW PROCESSOR CONTROLS	SEE FUNCTION
15	DETAIL-MAIN C-BOX RIGHT(PULSE FLW)	W9CBW3TG9	B2T2010015	PULSE FLOW INTERPRET RELAY PANEL	SEE FUNCTION
1056	**>>PULSE FLOW ANALIZERS**				
1056-1	ANALIZER DUAL CONDUCTIVITY	W9CBW3JE	09XSCT0001	ROSEMOUNT 1056 DUAL INPUT BOTH CONDU	FRONT OF TUNNEL
1056-2	ANALIZER DUAL PH	W9CBW3JE	09XSCT0002	ROSEMOUNT 1056 DUAL INPUT BOTH PH	FRONT OF TUNNEL
1056-3	ANALIZER DUAL PH	W9CBW3JE	09XSCT0002	ROSEMOUNT 1056 DUAL INPUT BOTH PH	FRONT OF TUNNEL
1056-4	ANALIZER DUAL IN CONDUCTIVITY/PH	W9CBW3JE	09XSCT0003	ROSEMOUNT 1056 DUAL INPUT CONDUCTIVIT	FRONT OF TUNNEL
BA	**>>PRINTED CIRCUIT BOARDS**				
BAD-*	BOARD-TYPICAL ANALOG TO DIGITAL (TEMP)	W9CBW3JA	08BSADCT	BD:SERIAL A-D CONVERT->TEST	MAIN CNTRL BOX
BAD-*	BOARD-TYPICAL ANALOG TO DIGITAL	W9CBW3JE	08BSADCT	BD:SERIAL A-D CONVERT->TEST	MAIN CNTRL BOX
BAD-0	BOARD-ANALOG TO DIGITAL CONVERTER	W9CBW3NB	08BSADCLT	BD:SER A-D+LOAD CELL->TESTED	MENTOR CNSOLE
BAD-0	BOARD-ANALOG TO DIGITAL CONVERTER	W9CBW3NBA	08BSADCLT	BD:SER A-D+LOAD CELL->TESTED	MENTOR CNSOLE
BAD-0	BOARD-ANALOG TO DIGITAL CONVERTER	W9CBW3NBB	08BSADCLT	BD:SER A-D+LOAD CELL->TESTED	MENTOR CNSOLE
BARS	BOARD PROBE RESISTOR	W9CBW3JE	08BNCNPHAT	PROBE RESISTOR BOARD	MAIN CNTRL BOX
BBB	BOARD-BATTERY BACKUP	W9CBW3NB	08BSBB1T	BOARD: SER BATT BACKUP-TEST	MENTOR CNSOLE
B-CMR	VIDEO CAMERA-SEALED ASSEMBLY	W9CBW3NBB	ZXUUACSZVA	SEALED CAMERA POWER OVER ETHERNET	LOOSE FIELD INST
BDA-1	BOARD-DIGITAL TO ANALOG CONVERTER	W9CBW3SK	08BSDACT	BD:SERIAL D-A CONVERTR->TEST	MAIN CNTRL BOX
BFAD-*	BOARD-TYPICAL A/D FOR OVERHEAD FILL	W9CBW3FT	08BSADCT	BD:SERIAL A/D CONVERT->TEST	MAIN CNTRL BOX
BHIO-1	BOARD-HIGH SPEED 8-16	W9CBW3SK	08BS816CHT	BD 8OUT-16IN HIGH SPD->TESTD	MAIN CNTRL BOX

COMPONENT PARTS LIST

COMPONENT NUMBER	FUNCTION OF THIS COMPONENT	WHERE TO FIND THIS COMPONENT	MILNOR P/N	DESCRIPTION	LOCATION
B-HUB	HUB-4 PORTS+4PoE PORTS	W9CBW3NBB	08PCSW4P4P	SWITCH 4 PORTS 4 POE	MENTOR CNSOLE
BIO-*	BOARD-TYPICAL 8OUT / 16 INPUT	W9CBW3JA	08BS816CT	BD:SERIAL 8OUT-16INPUT-TEST	MAIN CNTRL BOX
BIO-4	BOARD-STD 8OUT / 16 INPUT 4	W9CBW3AW	08BS816DT	SERIAL 8OUT-16INPUT-TESTED SURFACE MO	MAIN CNTRL BOX
BIO-A	BOARD-STD 8OUT / 16 INPUT A	W9CBW3SG	08BS816DT	SERIAL 8OUT-16INPUT-TESTED SURFACE MO	MAIN CNTRL BOX
BIO-B	BOARD-STD 8OUT / 16 INPUT B	W9CBW3SG	08BS816DT	SERIAL 8OUT-16INPUT-TESTED SURFACE MO	MAIN CNTRL BOX
BIO-E	BOARD-STD 8OUT / 16 INPUT E	W9CBW3NBC	08BS816DT	SERIAL 8OUT-16INPUT-TESTED SURFACE MO	MENTOR CNSOLE
BMTH-0	BOARD-MENTOR MOTHER	W9CBW3NB	08BS3MTHAT	SER 3 CARD MOTHER BD->TEST	MENTOR CNSOLE
BMTH-0	BOARD-MENTOR MOTHER	W9CBW3NBA	08BS3MTHAT	SER 3 CARD MOTHER BD->TEST	MENTOR CNSOLE
BMTH-0	BOARD-MENTOR MOTHER	W9CBW3NBB	08BS3MTHAT	SER 3 CARD MOTHER BD->TEST	MENTOR CNSOLE
BMTH-0	BOARD-MENTOR MOTHER	W9CBW3NBC	08BS3MTHAT	SER 3 CARD MOTHER BD->TEST	MENTOR CNSOLE
BMTH-1	BOARD-MODULE MOTHER	W9CBW3FT	08BS8MTHAT	BD:SERIAL 8 CARD MOTHER-TEST	MAIN CNTRL BOX
BMTH-1	BOARD-MODULE MOTHER	W9CBW3JA	08BS8MTHAT	BD:SERIAL 8 CARD MOTHER-TEST	MAIN CNTRL BOX
BMTH-1	BOARD-MODULE MOTHER	W9CBW3JE	08BS8MTHAT	BD:SERIAL 8 CARD MOTHER-TEST	MAIN CNTRL BOX
BMTH-A	BOARD-STANDARD MOTHER	W9CBW3SG	08BS5MTHAT	BD:SERIAL 8 CARD MOTHER-TEST	MAIN CNTRL BOX
BO24-*	BOARD -TYPICAL 24 OUTPUT	W9CBW3JA	08BSO24AT	BD:SERIAL 24 OUTPUT->TEST	MAIN CNTRL BOX
BO24-0	BOARD-24 OUTPUT FOR ALLIED INTERFACE	W9CBW3AI	08BSO24AT	BD:SERIAL 24 OUTPUT->TEST	MAIN CNTRL BOX
BO24-6	BOARD-24 OUTPUT FOR ALLIED INTERFACE	W9CBW3AI	08BSO24AT	BD:SERIAL 24 OUTPUT->TEST	MAIN CNTRL BOX
BO6	BOARD-6 OUTPUT	W9CBW3NBB	08BN6OBT	S S RELAY BOARD TESTED	MENTOR CNSOLE
BPB	BOARD-186 PROCESSOR BOARD	W9CBW3NB	08BSPDET	186 SERIAL PROCESSOR-TESTED	MENTOR CNSOLE
BPB	BOARD-186 PROCESSOR BOARD	W9CBW3NBA	08BSPE2T	PROC BD+FP->TEST	MENTOR CNSOLE
BPB	BOARD-186 PROCESSOR BOARD	W9CBW3NBB	08BSPG1T	BD:ARM7 SERIAL PROCESSOR->TEST	MENTOR CNSOLE
BPB	BOARD-Q7 PROCESSSOR	W9CBW3NBC	08BHGQ7BS	Q7 PROCESSOR WITH 10.4 DISPLAY 1024X76	MENTOR CNSOLE
B-PC	PERSONAL COMPUTER	W9CBW3NB	08PC806233	PC P6-233 INDUSTRIAL PC	MENTOR CNSOLE
B-PC	SOLID STATE COMPUTER+UPS	W9CBW3NBA	08PC80427K	PC-SIEMENS SIMATIC ASSY	MENTOR CNSOLE
B-PC	SOLID STATE COMPUTER+UPS	W9CBW3NBB	ECBW12SSPC	ASSY SIMATIC IPC427C W/ SERIAL CARD	MENTOR CNSOLE
B-PRN	PRINTER-MENTOR	W9CBW3NB	08MPARRLIJ	PRINTER-OKIDATA OKIPAGE #6EX	LOOSE FIELD INST
B-PRN	PRINTER-MENTOR	W9CBW3NBA	08MPARRLJ	PRINTER-BROTHER #HL 2240D	LOOSE FIELD INST
B-PRN	PRINTER-MENTOR	W9CBW3NBB	08MPARRLJ	PRINTER-BROTHER #HL 2240D	LOOSE FIELD INST
BSD	BOARD-STM DISINFECT BATTERY BACKUP	W9CBW3FS	08B1BSDT	BOARD;M6 CBW STEAM DIS TEST	MENTOR CNSOLE
BSM-1	BOARD SUMMING LOAD CELL	W9CBW3NB	08BDSB	SUMMING BD. UP TO 4 LOAD CELL	MENTOR CNSOLE
BSM-1	BOARD SUMMING LOAD CELL	W9CBW3NBA	08BDSB	SUMMING BD. UP TO 4 LOAD CELL	MENTOR CNSOLE
BSM-1	BOARD SUMMING LOAD CELL	W9CBW3NBB	08BDSB	SUMMING BD. UP TO 4 LOAD CELL	MENTOR CNSOLE
CB	**>>>CIRCUIT BREAKERS**				

COMPONENT PARTS LIST

COMPONENT NUMBER	FUNCTION OF THIS COMPONENT	WHERE TO FIND THIS COMPONENT	MILNOR P/N	DESCRIPTION	LOCATION
CB02	CIRCUIT BRK-120V STD I/O BOX	W9CBW3SA	09FM05BKGR	CKT BRK 5A240VBLK/BEZ-GRAY/BTN	MAIN CNTRL BOX
CB1	CIRCUIT BRK-SHAKER SCREEN+PUMP	W9CBW3SC	09FC032CAA	IEC MINI CIR.BREAK 32A 480V3P	SKR SCREEN BX
CB37	CIRCUIT BRK-MODULE CONTROL BOX	W9CBW3JB	09FM05BKGR	CKT BRK 5A240VBLK/BEZ-GRAY/BTN	MAIN CNTRL BOX
CBC	CIRCUIT BRK-CONTROL CIRCUIT	W9CBW3WA	09FC010CAA	IEC MINI CIR.BREAK 10A 480V3P	MAIN CNTRL BOX
CBC	CIRCUIT BRK-CONTROL CIRCUIT	W9CBW3WAA	09FC010CAA	IEC MINI CIR.BREAK 10A 480V3P	MAIN CNTRL BOX
CBFC1	CIRCUIT BRK-WASH FLOW BX 120V	W9CBW3ZA	09FM02BKBK	CKT BKR 2 AMP 240V	WASH WATER BX
CBFC1	CIRCUIT BRK-WASH FLOW BX 120V	W9CBW3ZE	09FM02BKBK	CKT BKR 2 AMP 240V	WASH FLOW BX
CBFC2	CIRCUIT BRK-WASH FLOW BX 24V	W9CBW3ZA	09FM02BKBK	CKT BKR 2 AMP 240V	WASH WATER BX
CBFC2	CIRCUIT BRK-WASH FLOW BX 24V	W9CBW3ZE	09FM02BKBK	CKT BKR 2 AMP 240V	WASH FLOW BX
CBI	CIRCUIT BRK-CONTROL+PUMPS/CONVEYORS	W9CBW3WA	09FC032CAA	IEC MINI CIR.BREAK 32A 480V3P	MAIN CNTRL BOX
CBI	CIRCUIT BRK-CONTROL+PUMPS/CONVEYORS	W9CBW3WAA	09FC032CAA	IEC MINI CIR.BREAK 32A 480V3P	MAIN CNTRL BOX
CBIP1	CIRCUIT BKR-SWTCH DUTY & MTR OVERLOAD	W9CBW3LP3	09FTB032T	OVERLOAD PROTECTOR ADJ. 23-32	MAIN CNTRL BOX
CBIP1	CIRCUIT BKR-SWTCH DUTY & MTR OVERLOAD	W9CBW3LP3D	09FTB032T	OVERLOAD PROTECTOR ADJ. 23-32	MAIN CNTRL BOX
CBIPA	CIRCUIT BKR-SWTCH DUTY & MTR OVERLOAD	W9CBW3LP3D	09FTB010T	OVERLOAD PROTECTOR ADJ.6.3-10	MAIN CNTRL BOX
CBIPB	CIRCUIT BKR-SWTCH DUTY & MTR OVERLOAD	W9CBW3LP3D	09FTB010T	OVERLOAD PROTECTOR ADJ.6.3-10	MAIN CNTRL BOX
CBLC	CIRCUIT BRK-LOADING INTERFACE	W9CBW3LB	09FM02BKBK	CKT BKR 2 AMP 240V	CONLO/WA BOX
CBLC	CIRCUIT BRK-LOADING INTERFACE	W9CBW3LBB	09FM02BKBK	CKT BKR 2 AMP 240V	CONLO/WA BOX
CBMC	CIRCUIT BRK-O/L-CONLO/WA BELT MTR	W9CBW3WA	MESSAGE EW	SEE CBMC-1 OR CBMC-2 FOR PART	CONLO/WA BOX
CBMC-1	CIRCUIT BRK-O/L-CONLO/WA MTR <250V	W9CBW3WA	09FTB006T	THERM OL (GFUS250)MAN:ADJ4-6A	CONLO/WA BOX
CBMC-1	CIRCUIT BRK-O/L-CONLO/WA MTR <250V	W9CBW3WAA	09FTB006T	THERM OL (GFUS250)MAN:ADJ4-6A	CONLO/WA BOX
CBMC-2	CIRCUIT BRK-O/L-CONLO/WA BELT MTR	W9CBW3WA	09FTB004T	THERM OL (GFUS250)MAN:ADJ2-4A	CONLO/WA BOX
CBMC-2	CIRCUIT BRK-O/L-CONLO/WA BELT MTR	W9CBW3WAA	09FTB004T	THERM OL (GFUS250)MAN:ADJ2-4A	CONLO/WA BOX
CBMPF	CIRCUIT BRK-O/L MAIN PF MOTOR	W9CBW3LP1	09FTB010T	OVERLOAD PROTECTOR ADJ.6.3-10	MAIN CNTRL BOX
CBMPF	CIRCUIT BRK-O/L MAIN PF MOTOR	W9CBW3LP1D	09FTB010T	OVERLOAD PROTECTOR ADJ.6.3-10	MAIN CNTRL BOX
CBMPF-1	CIRCUIT BRK-O/L FLUSH PUMP <380V60HZ	W9CBW3WA	09FTB001T	THERM OL (GFUS250)MAN:ADJ1.6A	STM DISINFBX
CBMPF-1	CIRCUIT BRK-O/L FLUSH PUMP <380V60HZ	W9CBW3WAA	09FTB001T	THERM OL (GFUS250)MAN:ADJ1.6A	FLUSH TANK BX
CBMPF-2	CIRCUIT BRK-O/L FLUSH PUMP >380V50HZ	W9CBW3WA	09FTC004T	THERM OL (GFUS250)MAN:ADJ2-4A	MAIN CNTRL BOX
CBMPF-2	CIRCUIT BRK-O/L FLUSH PUMP >380V50HZ	W9CBW3WAA	09FTC004T	THERM OL (GFUS250)MAN:ADJ2-4A	FLUSH TANK BX
CBMPFE	CIRCUIT BRK-O/L	W9CBW3LP4	09FTB032T	OVERLOAD PROTECTOR ADJ. 23-32	MAIN CNTRL BOX
CBMPFG	CIRCUIT BRK-O/L	W9CBW3LP2	09FTB016T	OVERLOAD PROTECTOR ADJ. 10-16	MAIN CNTRL BOX
CBMPFH	CIRCUIT BRK-O/L	W9CBW3LPA	09FTB016T	OVERLOAD PROTECTOR ADJ. 10-16	MAIN CNTRL BOX
CBP	CIRCUIT BRK-SHAKER SCREEN PUMP	W9CBW3SC	MESSAGE EW	SEE ETP	SKR SCREEN BX
CBS	CIRCUIT BRK-SHAKER	W9CBW3SC	MESSAGE EW	SEE ETS	SKR SCREEN BX

COMPONENT PARTS LIST

COMPONENT NUMBER	FUNCTION OF THIS COMPONENT	WHERE TO FIND THIS COMPONENT	MILNOR P/N	DESCRIPTION	LOCATION
CBWFS-1	CIRCUIT BRK-O/L CBWFS FOR <380V60HZ	W9CBW3WA	09FTB001T	THERM OL (GFUS250)MAN:ADJ1.6A	MAIN CNTRL BOX
CBWFS-1	CIRCUIT BRK-O/L CBWFS FOR <380V60HZ	W9CBW3WAA	09FTB001T	THERM OL (GFUS250)MAN:ADJ1.6A	RINSE ZN BOX
CBWFS-2	CIRCUIT BRK-O/L CBWFS FOR >380V50HZ	W9CBW3WA	09FTC004T	THERM OL (GFUS250)MAN:ADJ2-4A	MAIN CNTRL BOX
CBWFS-2	CIRCUIT BRK-O/L CBWFS FOR >380V50HZ	W9CBW3WAA	09FTC004T	THERM OL (GFUS250)MAN:ADJ2-4A	RINSE ZN BOX
CBWZ1	CIRCUIT BRK-RINSE ZONE 120V CIRCUIT	W9CBW3ZB	09FM02BKBK	CKT BKR 2 AMP 240V	RINSE ZN BOX
CBWZ1	CIRCUIT BRK-RINSE ZONE 120V CIRCUIT	W9CBW3ZG	09FM02BKBK	CKT BKR 2 AMP 240V	RINSE ZN BOX
CBWZ1	CIRCUIT BRK-RINSE ZONE 120V CIRCUIT	W9CBW3ZW	09FM02BKBK	CKT BKR 2 AMP 240V	RINSE ZN BOX
CBWZ2	CIRCUIT BRK-RINSE ZONE 24V CIRCUIT	W9CBW3ZB	09FM02BKBK	CKT BKR 2 AMP 240V	RINSE ZN BOX
CBWZ2	CIRCUIT BRK-RINSE ZONE 24V CIRCUIT	W9CBW3ZG	09FM02BKBK	CKT BKR 2 AMP 240V	RINSE ZN BOX
CBWZ2	CIRCUIT BRK-RINSE ZONE 24V CIRCUIT	W9CBW3ZW	09FM02BKBK	CKT BKR 2 AMP 240V	RINSE ZN BOX
CBWZP-1	CIRCUIT BRK-O/L CBWZP <380V60HZ	W9CBW3WA	09FTB001T	THERM OL (GFUS250)MAN:ADJ1.6A	INTERPRET BX
CBWZP-1	CIRCUIT BRK-O/L CBWZP <380V60HZ	W9CBW3WAA	09FTB001T	THERM OL (GFUS250)MAN:ADJ1.6A	RINSE ZN BOX
CBWZP-2	CIRCUIT BRK-O/L CBWZP >380V50HZ	W9CBW3WA	09FTC004T	THERM OL (GFUS250)MAN:ADJ2-4A	INTERPRET BX
CBWZP-2	CIRCUIT BRK-O/L CBWZP >380V50HZ	W9CBW3WAA	09FTC004T	THERM OL (GFUS250)MAN:ADJ2-4A	RINSE ZN BOX
CBWZR-1	CIRCUIT BRK-O/L CBWZR FOR <380V60HZ	W9CBW3WA	09FTB001T	THERM OL (GFUS250)MAN:ADJ1.6A	INTERPRET BX
CBWZR-1	CIRCUIT BRK-O/L CBWZR FOR <380V60HZ	W9CBW3WAA	09FTB001T	THERM OL (GFUS250)MAN:ADJ1.6A	RINSE ZN BOX
CBWZR-2	CIRCUIT BRK-O/L CBWZR FOR >380V50HZ	W9CBW3WA	09FTC004T	THERM OL (GFUS250)MAN:ADJ2-4A	INTERPRET BX
CBWZR-2	CIRCUIT BRK-O/L CBWZR FOR >380V50HZ	W9CBW3WAA	09FTC004T	THERM OL (GFUS250)MAN:ADJ2-4A	RINSE ZN BOX
CD	**>>RELAY-TIME DELAY**				
CD02	DELAY-BLT COMPRT AT C-BOX LOADED	W9CBW3LB	09CF001037	TDR F1S 2PDT 11PIN 120V60C	CONLO/WA BOX
CD02	DELAY-BLT COMPRT AT C-BOX LOADED	W9CBW3LBB	09CF001037	TDR F1S 2PDT 11PIN 120V60C	CONLO/WA BOX
CD1	DELAY-WATER DELAY #1	W9CBW3JH	09CF007524	TDR F7.5S 2PDT 11PIN 24V50/60C	MAIN CNTRL BOX
CD1	DELAY-WATER DELAY #1	W9CBW3ZH	09CF007524	TDR F7.5S 2PDT 11PIN 24V50/60C	PWR TANK BX
CD1N	DELAY-WASH LIFTER BYPASS VALVE	W9CBW3ZA	09CF007524	TDR F7.5S 2PDT 11PIN 24V50/60C	INTERPRET BX
CD1N	DELAY-WASH LIFTER BYPASS VALVE	W9CBW3ZE	09CF007524	TDR F7.5S 2PDT 11PIN 24V50/60C	WASH FLOW BX
CD2	DELAY-WATER DELAY #2	W9CBW3JH	09CF007524	TDR F7.5S 2PDT 11PIN 24V50/60C	MAIN CNTRL BOX
CDC#P	DELAY-END CHEM MANIFOLD PURGE	W9CBW3CA	MESSAGE EW	SUPPLIED BY CHEMICAL SUPPLIER	BY SUPPLIER
CDHL	DELAY-PUMP HIGH LEVEL	W9CBW3ZH	09CF001037	TDR A60S 2PDT 11PIN 24V50/60	PWR TANK BX
CDTPR	DELAY-TUNNEL POWER	W9CBW3FS	09CF001024	TDR F1S 2PDT 11PIN 24V60/50C	MAIN CNTRL BOX
CL	**>>RELAY-LATCH**				
CLDSDS <3-2025	LATCH-CALL FOR DISINFECT	W9CBW3FS	09CL2C-C37	RELAY-LATCH DPDT 120V 2-COIL	MAIN CNTRL BOX
CLDSDS>3-2025	LATCH-CALL FOR DISINFECT	W9CBW3FS	09CL2C-D37	RELAY-LATCH DPDT 120V 2-COIL ICECUBE	MAIN CNTRL BOX
CLFF <3-2025	LATCH-FLOW NOT (DUAL BATH)	W9CBW3FB	09CL2C-C37	RELAY-LATCH DPDT 120V 2-COIL	MAIN CNTRL BOX

COMPONENT PARTS LIST

COMPONENT NUMBER	FUNCTION OF THIS COMPONENT	WHERE TO FIND THIS COMPONENT	MILNOR P/N	DESCRIPTION	LOCATION
CLFF >3-2025	LATCH-FLOW NOT (DUAL BATH)	W9CBW3FB	09CL2D-C37	RELAY-LATCH DPDT 120V 2-COIL ICECUBE	MAIN CNTRL BOX
CLSC <3-2025	LATCH-AUTOMATIC FORWARD COMMANDED	W9CBW3LB	09CL2C-C37	RELAY-LATCH DPDT 120V 2-COIL	CONLO/WA BOX
CLSC >3-2025	LATCH-AUTOMATIC FORWARD COMMANDED	W9CBW3LB	09CL2D-C37	RELAY-LATCH DPDT 120V 2-COIL ICECUBE	CONLO/WA BOX
CLSC<3-2025	LATCH-AUTOMATIC FORWARD COMMANDED	W9CBW3LBB	09CL2C-C37	RELAY-LATCH DPDT 120V 2-COIL	CONLO/WA BOX
CLSC >3-2025	LATCH-AUTOMATIC FORWARD COMMANDED	W9CBW3LBB	09CL2D-C37	RELAY-LATCH DPDT 120V 2-COIL ICECUBE	CONLO/WA BOX
CLSC <3-2025	LATCH-AUTOMATIC FORWARD COMMANDED	W9CBW3LBA	09CL2C-C37	RELAY-LATCH DPDT 120V 2-COIL	CONLO/WA BOX
CLSC >3-2025	LATCH-AUTOMATIC FORWARD COMMANDED	W9CBW3LBA	09CL2D-C37	RELAY-LATCH DPDT 120V 2-COIL ICECUBE	CONLO/WA BOX
CP	**>>PHOTOEYES**				
CP01	PHOTOEYE-CBW END OF LOADING BELT	W9CBW3LB	09RPE004	SENSOR DARK OPERATE AC N/O-OUT	END OF BELT
CP01	PHOTOEYE-CBW END OF LOADING BELT	W9CBW3LBB	09RPE004	SENSOR DARK OPERATE AC N/O-OUT	END OF BELT
CP01	PHOTOEYE-CBW END OF LOADING BELT	W9CBW3LBA	09RPE004	SENSOR DARK OPERATE AC N/O-OUT	END OF BELT
CP02	PHOTOEYE-C-BOX END OF LOADING BLT	W9CBW3LB	09RPE004	SENSOR DARK OPERATE AC N/O-OUT	END OF BELT
CP02	PHOTOEYE-C-BOX END OF LOADING BLT	W9CBW3LBB	09RPE004	SENSOR DARK OPERATE AC N/O-OUT	END OF BELT
CP02	PHOTOEYE-C-BOX END OF LOADING BLT	W9CBW3LBA	09RPE004	SENSOR DARK OPERATE AC N/O-OUT	END OF BELT
CPLCB	PHOTOEYE-RECEIVER LOAD CHUTE	W9CBW3LA	09RPE006B	PHOTOEYE RECEIVER 24/120V AC	LOAD CHUTE
CPLCB	PHOTOEYE-RECEIVER LOAD CHUTE	W9CBW3LF	09RPE006B	PHOTOEYE RECEIVER 24/120V AC	LOAD CHUTE
CPLCB	PHOTOEYE-RECEIVER LOAD CHUTE	W9CBW3LP	09RPE006B	PHOTOEYE RECEIVER 24/120V AC	LOAD CHUTE
CPLCB	PHOTOEYE-RECEIVER LOAD CHUTE	W9CBW3LPB	09RPE006B	PHOTOEYE RECEIVER 24/120V AC	LOAD CHUTE
CPLCB	PHOTOEYE-RECEIVER LOAD CHUTE	W9CBW3LP4D	09RPE006B	PHOTOEYE RECEIVER 24/120V AC	LOAD CHUTE
CPLCB	PHOTOEYE-RECEIVER LOAD CHUTE	W9CBW3LPD	09RPE006B	PHOTOEYE RECEIVER 24/120V AC	LOAD CHUTE
CPLCC	PHOTOEYE-TRANSMITTER LOAD CHUTE	W9CBW3LA	09RPE006A	PHOTOEYE EMITTER 24/120V AC	LOAD CHUTE
CPLCC	PHOTOEYE-TRANSMITTER LOAD CHUTE	W9CBW3LF	09RPE006A	PHOTOEYE EMITTER 24/120V AC	LOAD CHUTE
CPLCC	PHOTOEYE-TRANSMITTER LOAD CHUTE	W9CBW3LP	09RPE006A	PHOTOEYE EMITTER 24/120V AC	LOAD CHUTE
CPLCC	PHOTOEYE-TRANSMITTER LOAD CHUTE	W9CBW3LPB	09RPE006A	PHOTOEYE EMITTER 24/120V AC	LOAD CHUTE
CPLCC	PHOTOEYE-TRANSMITTER LOAD CHUTE	W9CBW3LP4D	09RPE006A	PHOTOEYE EMITTER 24/120V AC	LOAD CHUTE
CPLCC	PHOTOEYE-TRANSMITTER LOAD CHUTE	W9CBW3LPD	09RPE006A	PHOTOEYE EMITTER 24/120V AC	LOAD CHUTE
CR	**>>RELAY-PILOT OR CONTROL**				
CR01	RELAY-BELT CMPRT AT CBW LOADED	W9CBW3LB	09C024D37	4PDT "KH" 110/120V	CONLO/WA BOX
CR01	RELAY-BELT CMPRT AT CBW LOADED	W9CBW3LBB	09C024D37	4PDT "KH" 110/120V	CONLO/WA BOX
CR01	RELAY-BELT CMPRT AT CBW LOADED	W9CBW3LBA	09C024D37	4PDT "KH" 110/120V	CONLO/WA BOX
CR24	RELAY-WASH LIFTER 24V CIRCUIT	W9CBW3ZA	09C024D24	RELAY 4PDT DIFGLD 14PIN 24V	PULSEFLOW TNK
CR24	RELAY-WASH LIFTER 24V CIRCUIT	W9CBW3ZE	09C024D24	RELAY 4PDT DIFGLD 14PIN 24V	WASH FLOW BX
CR24	RELAY-PWR TANK 24V CIRCUIT	W9CBW3ZH	09C024D24	RELAY 4PDT DIFGLD 14PIN 24V	PWR TANK BX

COMPONENT PARTS LIST

COMPONENT NUMBER	FUNCTION OF THIS COMPONENT	WHERE TO FIND THIS COMPONENT	MILNOR P/N	DESCRIPTION	LOCATION
CR37	RELAY-WASH LIFTER 120V CIRCUIT	W9CBW3ZA	09C024D37	4PDT "KH" 110/120V	MAIN CNTRL BOX
CR37	RELAY-WASH LIFTER 120V CIRCUIT	W9CBW3ZE	09C024D37	4PDT "KH" 110/120V	WASH FLOW BX
CRAB	RELAY-OK TO PASS EMPTY LOAD	W9CBW3JC	09C024D37	4PDT "KH" 110/120V	MAIN CNTRL BOX
CRAE	RELAY-CCW DIRECTION	W9CBW3DA	09C01DDD37	RELAY 3PDT DIFGLD 11PIV 120V	MAIN CNTRL BOX
CRAE	RELAY-CCW DIRECTION	W9CBW3DC	09C01DDD37	RELAY 3PDT DIFGLD 11PIV 120V	MAIN CNTRL BOX
CRBE	RELAY-CW DIRECTION	W9CBW3DA	09C01DDD37	RELAY 3PDT DIFGLD 11PIV 120V	MAIN CNTRL BOX
CRBE	RELAY-CW DIRECTION	W9CBW3DC	09C01DDD37	RELAY 3PDT DIFGLD 11PIV 120V	MAIN CNTRL BOX
CRC#	RELAY-SUPPLY #	W9CBW3CA	09C0PCRS120V	PHOENIX CONTACT RELAY 120VAC SP	MAIN CNTRL BOX
CRCB	RELAY-CIRCUIT BREAKER TRIPPED	W9CBW3JB	09C024D37	4PDT "KH"110/120V	MAIN CNTRL BOX
CRCB1	RELAY-RINSE ZONE 120V CIRCUIT BRK	W9CBW3ZB	09C024D37	4PDT "KH" 110/120V	RINSE ZN BOX
CRCB1	RELAY-RINSE ZONE 120V CIRCUIT BRK	W9CBW3ZG	09C024D37	4PDT "KH" 110/120V	RINSE ZN BOX
CRCB1	RELAY-RINSE ZONE 120V CIRCUIT BRK	W9CBW3ZW	09C024D37	4PDT "KH" 110/120V	RINSE ZN BOX
CRCBF	RELAY-120VAC ON AT FLUSH BOX	W9CBW3LA	09C024D37	4PDT "KH"110/120V	MAIN CNTRL BOX
CRCBF	RELAY-120VAC ON AT FLUSH BOX	W9CBW3LF	09C024D37	4PDT "KH"110/120V	MAIN CNTRL BOX
CRCBF	RELAY-120VAC ON AT FLUSH BOX	W9CBW3LP	09C024D37	4PDT "KH"110/120V	MAIN CNTRL BOX
CRCBF	RELAY-120VAC ON AT FLUSH BOX	W9CBW3LPB	09C024D37	4PDT "KH"110/120V	MAIN CNTRL BOX
CRCBF	RELAY-CIRCUIT BREAKER	W9CBW3LP4D	09C024D37	4PDT "KH"110/120V	MAIN CNTRL BOX
CRCBF	RELAY-CIRCUIT BREAKER	W9CBW3LPD	09C024D37	4PDT "KH"110/120V	MAIN CNTRL BOX
CRCBL	RELAY-LOADING BELT CIRCUIT BRK ON	W9CBW3LB	09C024D37	4PDT "KH" 110/120V	CONLO/WA BOX
CRCBL	RELAY-LOADING BELT CIRCUIT BRK ON	W9CBW3LBB	09C024D37	4PDT "KH" 110/120V	CONLO/WA BOX
CRCBL	RELAY-LOADING BELT CIRCUIT BRK ON	W9CBW3LBA	09C024D37	4PDT "KH" 110/120V	CONLO/WA BOX
CRCBS	RELAY-120VAC ON AT STD I/O BOX	W9CBW3SA	09C024D37	4PDT "KH" 110/120V	MAIN CNTRL BOX
CRCBZ	RELAY-RINSE ZONE CIRCUIT BRK 24V	W9CBW3ZB	09C024D24	RELAY 4PDT DIFGLD 14PIN 24V	RINSE ZN BOX
CRCBZ	RELAY-RINSE ZONE CIRCUIT BRK 24V	W9CBW3ZG	09C024D24	RELAY 4PDT DIFGLD 14PIN 24V	RINSE ZN BOX
CRCBZ	RELAY-RINSE ZONE CIRCUIT BRK 24V	W9CBW3ZW	09C024D24	RELAY 4PDT DIFGLD 14PIN 24V	RINSE ZN BOX
CRCF	RELAY-LOADING BELT FORWARD	W9CBW3LBA	09C024D37	4PDT "KH"110/120V	CONLO/WA C-BX
CRCHT	RELAY-CONDUCTIVITY HIGH IN EXTRACT TANK	W9CBW3FA	09C024D36	4PDT "KH"110/120V	MAIN CNTRL BOX
CRCR	RELAY-LOADING BELT REVERSE	W9CBW3LBA	09C024D37	4PDT "KH"110/120V	CONLO/WA C-BX
CRCT	RELAY-COLD WATER ONLY FOR DUAL FILL PFT	W9CBW3FT	09C024D37	4PDT "KH"110/120V	MAIN CNTRL BOX
CRCWH	RELAY CONWA WEIGHT IS HIGH	W9CBW3LC	09C024D37	4PDT "KH" 110/120V	CONLO/WA BOX
CRCWH	RELAY CONWA WEIGHT IS HIGH	W9CBW3LCB	09C024D37	4PDT "KH" 110/120V	CONLO/WA BOX
CRCWH	RELAY CONWA WEIGHT IS HIGH	W9CBW3LCA	09C024D37	4PDT "KH" 110/120V	CONLO/WA BOX
CRCWL	RELAY-CONWA WEIGHT IS LOW	W9CBW3LC	09C024D37	4PDT "KH" 110/120V	CONLO/WA BOX

COMPONENT PARTS LIST

COMPONENT NUMBER	FUNCTION OF THIS COMPONENT	WHERE TO FIND THIS COMPONENT	MILNOR P/N	DESCRIPTION	LOCATION
CRCWL	RELAY-CONWA WEIGHT IS LOW	W9CBW3LCB	09C024D37	4PDT "KH" 110/120V	CONLO/WA BOX
CRCWL	RELAY-CONWA WEIGHT IS LOW	W9CBW3LCA	09C024D37	4PDT "KH" 110/120V	CONLO/WA BOX
CRCWO	RELAY-CONWA WEIGHT IS OK	W9CBW3LC	09C024D37	4PDT "KH" 110/120V	CONLO/WA BOX
CRCWO	RELAY-CONWA WEIGHT IS OK	W9CBW3LCB	09C024D37	4PDT "KH" 110/120V	CONLO/WA BOX
CRCWO	RELAY-CONWA WEIGHT IS OK	W9CBW3LCA	09C024D37	4PDT "KH" 110/120V	CONLO/WA BOX
CRDR	RELAY-DRAIN MODULE	W9CBW3ZD	09C024D37	4PDT "KH"110/120V	RINSE ZN BOX
CRDR*	RELAY-DRAIN MODULE	W9CBW3SC	09C024D37	4PDT "KH"110/120V	SKR SCREEN BX
CRDRT	RELAY-DRAIN TANK	W9CBW3FT	09C024D37	4PDT "KH"110/120V	MAIN CNTRL BOX
CRDRX	RELAY-DRAIN MODULE	W9CBW3FT	09C024D37	4PDT "KH"110/120V	MAIN CNTRL BOX
CREP	RELAY ENABLE PUMP	W9CBW3LP3	09C024D37	4PDT "KH"110/120V	MAIN CNTRL BOX
CREP	RELAY ENABLE PUMP	W9CBW3LP3D	09C024D37	4PDT "KH"110/120V	MAIN CNTRL BOX
CREST	RELAY-TEST DRIVE	W9CBW3DA	09C024D37	4PDT "KH"110/120V	MAIN CNTRL BOX
CREST	RELAY-TEST DRIVE	W9CBW3DC	09C024D37	4PDT "KH"110/120V	MAIN CNTRL BOX
CRF	RELAY-MOVE LEFT/RIGHT	W9CBW3ZJ	09C024D37	4PDT "KH"110/120V	FLOW SPLIT BOX
CRFD	RELAY-DRAIN FLOW SPLITTER	W9CBW3ZD	09C024D37	4PDT "KH" 110/120V	RINSE ZN BOX
CRFD	RELAY-WASH WATER FLOW TO DRAIN	W9CBW3ZE	09C024D37	4PDT "KH" 110/120V	WASH FLOW BX
CRFD	RELAY-FLOW SPLITTER TO DRAIN	W9CBW3ZG	09C024D37	4PDT "KH" 110/120V	RINSE ZN BOX
CRFD	RELAY-FLOW SPLITTER TO DRAIN	W9CBW3ZW	09C024D37	4PDT "KH" 110/120V	RINSE ZN BOX
CRFE	RELAY-FLUSH ENHANCE	W9CBW3LA	09C024D37	4PDT "KH"110/120V	MAIN CNTRL BOX
CRFE	RELAY-FLUSH ENHANCE	W9CBW3LF	09C024D37	4PDT "KH"110/120V	MAIN CNTRL BOX
CRFE	RELAY-FLUSH ENHANCE	W9CBW3LP	09C024D37	4PDT "KH"110/120V	MAIN CNTRL BOX
CRFE	RELAY-FLUSH ENHANCE	W9CBW3LPB	09C024D37	4PDT "KH"110/120V	MAIN CNTRL BOX
CRFE	RELAY-FLUSH ENHANCE	W9CBW3LP4D	09C024D37	4PDT "KH"110/120V	MAIN CNTRL BOX
CRFE	RELAY-FLUSH ENHANCE	W9CBW3LPD	09C024D37	4PDT "KH"110/120V	MAIN CNTRL BOX
CRFF*	RELAY-FAST FILL MODULE	W9CBW3SC	09C024D37	4PDT "KH"110/120V	SKR SCREEN BX
CRFFM	RELAY ENABLE FAST FILL FOR MODULE	W9CBW3LP3	09C024D37	4PDT "KH"110/120V	MAIN CNTRL BOX
CRFFM	RELAY ENABLE FAST FILL FOR MODULE	W9CBW3LP3D	09C024D37	4PDT "KH"110/120V	MAIN CNTRL BOX
CRFFX	RELAY-FAST FILL FROM FLUSH PUMP	W9CBW3LP1	09C024D37	4PDT "KH"110/120V	MAIN CNTRL BOX
CRFFX	RELAY-FAST FILL FROM FLUSH PUMP	W9CBW3LP1D	09C024D37	4PDT "KH"110/120V	MAIN CNTRL BOX
CRFG	RELAY COLD WATER C-BIT	W9CBW3LP3	09C024D37	4PDT "KH"110/120V	MAIN CNTRL BOX
CRFG	RELAY PULSE FLOW PUMP C-BIT	W9CBW3LP3D	09C024D37	4PDT "KH"110/120V	MAIN CNTRL BOX
CRFI	RELAY-FLUSH ENABLED	W9CBW3LP	09C024D37	4PDT "KH"110/120V	MAIN CNTRL BOX
CRFI	RELAY-FLUSH ENABLED	W9CBW3LPB	09C024D37	4PDT "KH"110/120V	MAIN CNTRL BOX

COMPONENT PARTS LIST

COMPONENT NUMBER	FUNCTION OF THIS COMPONENT	WHERE TO FIND THIS COMPONENT	MILNOR P/N	DESCRIPTION	LOCATION
CRFI	RELAY-FLUSH ENABLED	W9CBW3LP4D	09C024D37	4PDT "KH"110/120V	MAIN CNTRL BOX
CRFI	RELAY-FLUSH ENABLED	W9CBW3LPD	09C024D37	4PDT "KH"110/120V	MAIN CNTRL BOX
CRFL1	RELAY-LOW LEVEL IN MODULE 1	W9CBW3LA	09C024DC12	RELAY 12VDC 14 PIN OMRON	MAIN CNTRL BOX
CRFL1	RELAY-LOW LVL SATISFIED REUSE TANK	W9CBW3LG	09C024D37	4PDT "KH"110/120V	MAIN CNTRL BOX
CRFL1	RELAY-LOW LEVEL IN MODULE 1	W9CBW3LP	09C024DC12	RELAY 12VDC 14 PIN OMRON	MAIN CNTRL BOX
CRFL1	RELAY-LOW LEVEL IN MODULE 1	W9CBW3LPB	09C024DC12	RELAY 12VDC 14 PIN OMRON	MAIN CNTRL BOX
CRFL1	RELAY-LOW LEVEL IN MODULE 1	W9CBW3LP4D	09C024DC12	RELAY 12VDC 14 PIN OMRON	MAIN CNTRL BOX
CRFL1	RELAY-LOW LEVEL IN MODULE 1	W9CBW3LPD	09C024DC12	RELAY 12VDC 14 PIN OMRON	MAIN CNTRL BOX
CRFLK	RELAY-FLUSH WATER INTO MODULE 1	W9CBW3LA	09C024D37	4PDT "KH"110/120V	MAIN CNTRL BOX
CRFLK	RELAY-FLUSH WATER INTO MODULE 1	W9CBW3LF	09C024D37	4PDT "KH"110/120V	MAIN CNTRL BOX
CRFLK	RELAY-FLUSH WATER INTO MODULE 1	W9CBW3LP	09C024D37	4PDT "KH"110/120V	MAIN CNTRL BOX
CRFLK	RELAY-FLUSH WATER INTO MODULE 1	W9CBW3LPB	09C024D37	4PDT "KH"110/120V	MAIN CNTRL BOX
CRFLK	RELAY-FLUSH WATER INTO MODULE 1	W9CBW3LP4D	09C024D37	4PDT "KH"110/120V	MAIN CNTRL BOX
CRFLK	RELAY-FLUSH WATER INTO MODULE 1	W9CBW3LPD	09C024D37	4PDT "KH"110/120V	MAIN CNTRL BOX
CRFLL	RELAY-FLUSH LOAD INTO MODULE 1	W9CBW3LA	09C024D37	4PDT "KH"110/120V	MAIN CNTRL BOX
CRFLL	RELAY-FLUSH LOAD INTO MODULE 1	W9CBW3LF	09C024D37	4PDT "KH"110/120V	MAIN CNTRL BOX
CRFLL	RELAY-FLUSH LOAD INTO MODULE 1	W9CBW3LP	09C024D37	4PDT "KH"110/120V	MAIN CNTRL BOX
CRFLL	RELAY-FLUSH LOAD INTO MODULE 1	W9CBW3LPB	09C024D37	4PDT "KH"110/120V	MAIN CNTRL BOX
CRFLL	RELAY-FLUSH LOAD INTO MODULE 1	W9CBW3LP4D	09C024D37	4PDT "KH"110/120V	MAIN CNTRL BOX
CRFLL	RELAY-FLUSH LOAD INTO MODULE 1	W9CBW3LPD	09C024D37	4PDT "KH"110/120V	MAIN CNTRL BOX
CRFM	RELAY-MODULE 1 WATER	W9CBW3LP	09C024D37	4PDT "KH"110/120V	MAIN CNTRL BOX
CRFM	RELAY-MODULE 1 WATER	W9CBW3LPB	09C024D37	4PDT "KH"110/120V	MAIN CNTRL BOX
CRFM	RELAY-MODULE 1 WATER	W9CBW3LP4D	09C024D37	4PDT "KH"110/120V	MAIN CNTRL BOX
CRFM	RELAY-MODULE 1 WATER	W9CBW3LPD	09C024D37	4PDT "KH"110/120V	MAIN CNTRL BOX
CRFNS	RELAY-MACHINE IN HOLD	W9CBW3NA	09C024D37	4PDT "KH"110/120V	MENTOR CNSOLE
CRFT	RELAY-FILL TANK	W9CBW3ZH	09C024D24	RELAY 4PDT DIFGLD 14PIN 24V	PWR TANK BX
CRHA1	RELAY-STOP FILL TANK	W9CBW3ZH	09C024D24	RELAY 4PDT DIFGLD 14PIN 24V	PWR TANK BX
CRHFF	RELAY-FILTER TANK HIGH LEVEL	W9CBW3ZB	09C024D24	RELAY 4PDT DIFGLD 14PIN 24V	RINSE ZN BOX
CRHFF	RELAY-FILTER TANK HIGH LEVEL	W9CBW3ZG	09C024D24	RELAY 4PDT DIFGLD 14PIN 24V	RINSE ZN BOX
CRHFF	RELAY-FILTER TANK HIGH LEVEL	W9CBW3ZW	09C024D24	RELAY 4PDT DIFGLD 14PIN 24V	RINSE ZN BOX
CRHL	RELAY-WASH WATER TANK HIGH LEVEL	W9CBW3ZA	09C024D24	RELAY 4PDT DIFGLD 14PIN 24V	CONLO/CONWA
CRHL	RELAY-WASH WATER TANK HIGH LEVEL	W9CBW3ZE	09C024D24	RELAY 4PDT DIFGLD 14PIN 24V	WASH FLOW BX
CRHN	RELAY-SOUND HORN	W9CBW3SB	09C024D37	4PDT "KH" 110/120V	CONWA C-BOX

COMPONENT PARTS LIST

COMPONENT NUMBER	FUNCTION OF THIS COMPONENT	WHERE TO FIND THIS COMPONENT	MILNOR P/N	DESCRIPTION	LOCATION
CRHNS	RELAY-HOLD HORN CANCEL	W9CBW3NA	09C024D37	4PDT "KH"110/120V	MENTOR CNSOLE
CRHNS	RELAY-HOLD HORN CANCEL	W9CBW3NAA	09C024D37	4PDT "KH"110/120V	MENTOR CNSOLE
CRI	RELAY-SEC,ALTERNATE ROTATION ARC.	W9CBW3SJ	09C024D37	4PDT "KH" 110/120V	MAIN CNTRL BOX
CRI 1-16	RELAY-INTERPRET ALLIED INF #1-16	W9CBW3IB	09C0PCRS120V	PHOENIX CONTACT RELAY 120VAC SP	MAIN CNTRL BOX
CRJ 17-32	RELAY-INTERPRET ALLIED INF #17-32	W9CBW3IB	09C0PCRS120V	PHOENIX CONTACT RELAY 120VAC SP	MAIN CNTRL BOX
CRLCB	RELAY-LOAD CHUTE BLOCKED	W9CBW3LA	09C024D37	4PDT "KH"110/120V	MAIN CNTRL BOX
CRLCB	RELAY-LOAD CHUTE BLOCKED	W9CBW3LF	09C024D37	4PDT "KH"110/120V	MAIN CNTRL BOX
CRLCB	RELAY-LOAD CHUTE BLOCKED	W9CBW3LP	09C024D37	4PDT "KH"110/120V	MAIN CNTRL BOX
CRLCB	RELAY-LOAD CHUTE BLOCKED	W9CBW3LPB	09C024D37	4PDT "KH"110/120V	MAIN CNTRL BOX
CRLCB	RELAY-LOAD CHUTE BLOCKED	W9CBW3LP4D	09C024D37	4PDT "KH"110/120V	MAIN CNTRL BOX
CRLCB	RELAY-LOAD CHUTE BLOCKED	W9CBW3LPD	09C024D37	4PDT "KH"110/120V	MAIN CNTRL BOX
CRLD1	RELAY-LONG DISTANCE INCOMPATABILY	W9CBW3FA	09C024D37	4PDT "KH"110/120V	MAIN CNTRL BOX
CRLD2	RELAY-LONG DISTANCE INCOMPATABILY	W9CBW3FA	09C024D37	4PDT "KH"110/120V	MAIN CNTRL BOX
CRLD3	RELAY-PRESS/EXTRACTOR LDI	W9CBW3FAA	09C024D37	4PDT "KH"110/120V	MAIN CNTRL BOX
CRLD4	RELAY-PRESS/EXTRACTOR LDI	W9CBW3FAA	09C024D37	4PDT "KH"110/120V	MAIN CNTRL BOX
CRLFA	RELAY-LAST MODULE FAST FILL	W9CBW3ZH	09C024D37	4PDT "KH"110/120V	PWR TANK BX
CRLFB	RELAY-LAST MODULE FAST FILL	W9CBW3XH	09C024D37	4PDT "KH"110/120V	PWR TANK
CRLFS	RELAY-FILTER TANK LOW LEVEL	W9CBW3ZB	09C024D24	RELAY 4PDT DIFGLD 14PIN 24V	RINSE ZN BOX
CRLFS	RELAY-FILTER TANK LOW LEVEL	W9CBW3ZG	09C024D24	RELAY 4PDT DIFGLD 14PIN 24V	RINSE ZN BOX
CRLFS	RELAY-FILTER TANK LOW LEVEL	W9CBW3ZW	09C024D24	RELAY 4PDT DIFGLD 14PIN 24V	RINSE ZN BOX
CRLLL	RELAY-LOW LVL SATISFIED MOD 1	W9CBW3LG	09C024D37	4PDT "KH"110/120V	MAIN CNTRL BOX
CRLLLA	RELAY-LOW LVL SATISFIED MOD 1	W9CBW3LG	09C024D37	4PDT "KH"110/120V	MAIN CNTRL BOX
CRMF	RELAY-MAIN WATER FLOW	W9CBW3FC	09C024D37	4PDT "KH"110/120V	MAIN CNTRL BOX
CRMPFG	RELAY ENABLE PUMP	W9CBW3LP2	09C024D37	4PDT "KH"110/120V	MAIN CNTRL BOX
CRMPFH	RELAY-ENABLE PULSE FLOW C-BIT	W9CBW3LPA	09C024D37	4PDT "KH"110/120V	MAIN CNTRL BOX
CRNIH	RELAY-CBW NOT IN HOLD	W9CBW3ZH	09C024D37	4PDT "KH" 110/120V	PWR TANK BX
CRNS8	RELAY-CONWA TARING	W9CBW3SB	09C024D37	4PDT "KH" 110/120V	CONWA C-BOX
CRNSA	RELAY-TUNNEL NOT IN HOLD	W9CBW3ZB	09C024D37	4PDT "KH" 110/120V	RINSE ZN BOX
CRNSA	RELAY-TUNNEL NOT IN HOLD	W9CBW3ZG	09C024D37	4PDT "KH" 110/120V	RINSE ZN BOX
CRNSA	RELAY-TUNNEL NOT IN HOLD	W9CBW3ZW	09C024D37	4PDT "KH" 110/120V	RINSE ZN BOX
CRP	RELAY-WASH LIFTER NORMAL FLOW	W9CBW3ZA	09C024D24	RELAY 4PDT DIFGLD 14PIN 24V	CONLO/WA C-BX
CRP	RELAY-WASH LIFTER NORMAL FLOW	W9CBW3ZE	09C024D24	RELAY 4PDT DIFGLD 14PIN 24V	WASH FLOW BX
CRPF	RELAY-RUN FLUSH PUMP INVERTER	W9CBW3LP	09C024D37	4PDT "KH"110/120V	MAIN CNTRL BOX

COMPONENT PARTS LIST

COMPONENT NUMBER	FUNCTION OF THIS COMPONENT	WHERE TO FIND THIS COMPONENT	MILNOR P/N	DESCRIPTION	LOCATION
CRPF	RELAY-RUN FLUSH PUMP INVERTER	W9CBW3LPB	09C024D37	4PDT "KH"110/120V	MAIN CNTRL BOX
CRPF	RELAY-RUN FLUSH PUMP INVERTER	W9CBW3LPD	09C024D37	4PDT "KH"110/120V	MAIN CNTRL BOX
CRMPFE	RELAY ENABLE MODULE TO MODULE	W9CBW3LP4	09C024D37	4PDT "KH"110/120V	FLUSH INF BX
CRPFET	RELAY-PULSE FLOW IS ON	W9CBW3SC	09C024D37	4PDT "KH"110/120V	SKR SCREEN BX
CRPR	RELAY-120VAC AVAILABLE	W9CBW3NA	09C024D37	4PDT "KH"110/120V	MENTOR CNSOLE
CRPR	RELAY-120VAC AVAILABLE	W9CBW3NAA	09C024D37	4PDT "KH"110/120V	MENTOR CNSOLE
CRPS	RELAY-BATTERY MODE	W9CBW3NBC	09C024DC12	RELAY 12VDC 14 PIN OMRON	MENTOR CNSOLE
CRPS	RELAY-PUMP SHOULD HAVE RUN	W9CBW3ZH	09C024D37	4PDT "KH"110/120V	PWR TANK BX
CRR	RELAY-SHAKER SCREEN ON	W9CBW3SC	09C024D37	4PDT "KH"110/120V	SKR SCREEN BX
CRRD	RELAY-REUSE TANK TO DRAIN	W9CBW3RA	09C024D37	4PDT "KH"110/120V	LOAD CHUTE
CRRDA	RELAY-REUSE TANK TO DRAIN	W9CBW3ZW	09C024D37	4PDT "KH"110/120V	RINSE ZN BOX
CRSBF	RELAY-STANDING BATH FLUSH TANK	W9CBW3LA	09C024D37	4PDT "KH" 110/120V	MAIN CNTRL BOX
CRSBF	RELAY-STANDING BATH FLUSH TANK	W9CBW3LF	09C024D37	4PDT "KH" 110/120V	MAIN CNTRL BOX
CRSBF	RELAY-STANDING BATH FLUSH TANK	W9CBW3LP	09C024D37	4PDT "KH" 110/120V	MAIN CNTRL BOX
CRSBF	RELAY-STANDING BATH FLUSH TANK	W9CBW3LPB	09C024D37	4PDT "KH" 110/120V	MAIN CNTRL BOX
CRSBF	RELAY-STANDING BATH FLUSH TANK	W9CBW3LP4D	09C024D37	4PDT "KH" 110/120V	MAIN CNTRL BOX
CRSBF	RELAY-STANDING BATH FLUSH TANK	W9CBW3LPD	09C024D37	4PDT "KH" 110/120V	MAIN CNTRL BOX
CRSC	RELAY-START LOAD CONVEYOR	W9CBW3LB	09C024D37	4PDT "KH" 110/120V	CONLO/WA BOX
CRSC	RELAY-START LOAD CONVEYOR	W9CBW3LBB	09C024D37	4PDT "KH" 110/120V	CONLO/WA BOX
CRSC	RELAY-START LOAD CONVEYOR	W9CBW3LBA	09C024D37	4PDT "KH" 110/120V	CONLO/WA BOX
CRSCA	RELAY-LOADING BELT FORWARD	W9CBW3LB	09C024D37	4PDT "KH" 110/120V	CONLO/WA BOX
CRSCA	RELAY-LOADING BELT FORWARD	W9CBW3LBB	09C024D37	4PDT "KH" 110/120V	CONLO/WA BOX
CRSCA	RELAY-LOADING BELT FORWARD	W9CBW3LBA	09C024D37	4PDT "KH" 110/120V	CONLO/WA BOX
CRSL	RELAY SAFETY LEVEL PFT TANK	W9CBW3LP1	09C024D37	4PDT "KH"110/120V	MAIN CNTRL BOX
CRSL	RELAY SAFETY LEVEL PFT TANK	W9CBW3LP1D	09C024D37	4PDT "KH"110/120V	MAIN CNTRL BOX
CRSL	RELAY SAFETY LEVEL PFT TANK	W9CBW3LP2D	09C024D37	4PDT "KH"110/120V	MAIN CNTRL BOX
CRSLA	RELAY SAFETY LEVEL PFT TANK	W9CBW3LP1	09C024D37	4PDT "KH"110/120V	MAIN CNTRL BOX
CRSLA	RELAY SAFETY LEVEL PFT TANK	W9CBW3LP2D	09C024D37	4PDT "KH"110/120V	MAIN CNTRL BOX
CRSMZ	RELAY-PUMP FROM REUSE	W9CBW3LP1D	09C024D37	4PDT "KH"110/120V	MAIN CNTRL BOX
CRSMZ	RELAY-PUMP FROM REUSE	W9CBW3LP2D	09C024D37	4PDT "KH"110/120V	MAIN CNTRL BOX
CRSSN	RELAY SLOWER SPEED PULSE FLOW	W9CBW3LP6	09C024D37	4PDT "KH"110/120V	MAIN CNTRL BOX
CRST1	RELAY-START LOAD CONVEYOR	W9CBW3SA	09C024D37	4PDT "KH" 110/120V	FLUSH INF BX
CRST2	RELAY-START LOAD CONVEYOR	W9CBW3SA	09C024D37	4PDT "KH" 110/120V	FLUSH INF BOX

COMPONENT PARTS LIST

COMPONENT NUMBER	FUNCTION OF THIS COMPONENT	WHERE TO FIND THIS COMPONENT	MILNOR P/N	DESCRIPTION	LOCATION
CRSTN	RELAY COMMITS TO TRANSFER	W9CBW3LP6	09C024D37	4PDT "KH" 110/120V	MAIN CNTRL BOX
CRT	**>>ELECTRONIC DISPLAYS**				
CRT1	MONITOR-MENTOR	W9CBW3NB	08MN075VGA	MONITOR SVGA 15" .28DP IN	MENTOR CNSOLE
CRT1	MONITOR-MENTOR	W9CBW3NBA	08MN23TVGA	23"LCD BMIDH TOUCHSCREEN	MENTOR CNSOLE
CRT1	MONITOR-MENTOR	W9CBW3NBB	08MN23TVGA	23"LCD BMIDH TOUCHSCREEN	MENTOR CNSOLE
CRTP+	RELAY-TUNNEL POWER ENABLED	W9CBW3NA	09C024D37	4PDT "KH"110/120V	MENTOR CNSOLE
CRTP+	RELAY-TUNNEL POWER ENABLED	W9CBW3NAA	09C024D37	4PDT "KH"110/120V	MENTOR CNSOLE
CRUN1	RELAY-CONWA WEIGHT 0	W9CBW3LC	09C024D37	4PDT "KH" 110/120V	CONLO/WA BOX
CRUN1	RELAY-CONWA WEIGHT 0	W9CBW3LCB	09C024D37	4PDT "KH" 110/120V	CONLO/WA BOX
CRUN1	RELAY-CONWA WEIGHT 0	W9CBW3LCA	09C024D37	4PDT "KH" 110/120V	CONLO/WA BOX
CRUN2	RELAY-CONWA WEIGHT 1	W9CBW3LC	09C024D37	4PDT "KH" 110/120V	CONLO/WA BOX
CRUN2	RELAY-CONWA WEIGHT 1	W9CBW3LCB	09C024D37	4PDT "KH" 110/120V	CONLO/WA BOX
CRUN2	RELAY-CONWA WEIGHT 1	W9CBW3LCA	09C024D37	4PDT "KH" 110/120V	CONLO/WA BOX
CRUN3	RELAY-LOCKOUT MANUAL OPERATION	W9CBW3LB	09C024D37	4PDT "KH" 110/120V	CONLO/WA BOX
CRUN3	RELAY-LOCKOUT MANUAL OPERATION	W9CBW3LBB	09C024D37	4PDT "KH" 110/120V	CONLO/WA BOX
CRUN3	RELAY-LOCKOUT MANUAL OPERATION	W9CBW3LBA	09C024D37	4PDT "KH" 110/120V	CONLO/WA BOX
CRUN8	RELAY-CBW IN HOLD	W9CBW3SB	09C024D37	4PDT "KH" 110/120V	CONWA C-BOX
CRWDT	RELAY-CW ROTATION ERROR	W9CBW3DA	09C024D37	4PDT "KH"110/120V	MAIN CNTRL BOX
CRWDT	RELAY-CW ROTATION ERROR	W9CBW3DC	09C024D37	4PDT "KH"110/120V	MAIN CNTRL BOX
CRWT	RELAY-CONWA IS TARING	W9CBW3LC	09C024D37	4PDT "KH" 110/120V	CONLO/WA BOX
CRWT	RELAY-CONWA IS TARING	W9CBW3LCB	09C024D37	4PDT "KH" 110/120V	CONLO/WA BOX
CRWT	RELAY-CONWA IS TARING	W9CBW3LCA	09C024D37	4PDT "KH" 110/120V	CONLO/WA BOX
CRXDA	RELAY-CHUTE DOWN 12VDC	W9CBW3LH	09C024DC12	RELAY 12VDC 14 PIN OMRON	MAIN CNTRL BOX
CRXDB	RELAY-CHUTE DOWN 12VDC	W9CBW3LH	09C024DC12	RELAY 12VDC 14 PIN OMRON	MAIN CNTRL BOX
CRXM1	RELAY-MODULE 1 LEVEL BY PASS	W9CBW3LA	09C024D37	4PDT "KH"110/120V	MAIN CNTRL BOX
CRXM1	RELAY-MODULE 1 LEVEL BY PASS	W9CBW3LP	09C024D37	4PDT "KH"110/120V	MAIN CNTRL BOX
CRXM1	RELAY-MODULE 1 LEVEL BY PASS	W9CBW3LPB	09C024D37	4PDT "KH"110/120V	MAIN CNTRL BOX
CRXM1	RELAY-MODULE 1 LEVEL BY PASS	W9CBW3LP4D	09C024D37	4PDT "KH"110/120V	MAIN CNTRL BOX
CRXM1	RELAY-MODULE 1 LEVEL BY PASS	W9CBW3LPD	09C024D37	4PDT "KH"110/120V	MAIN CNTRL BOX
CRXUA	RELAY-CHUTE UP 12VDC	W9CBW3LH	09C024DC12	RELAY 12VDC 14 PIN OMRON	MAIN CNTRL BOX
CRXUB	RELAY-CHUTE UP 12VDC	W9CBW3LH	09C024DC12	RELAY 12VDC 14 PIN OMRON	MAIN CNTRL BOX
CS	**>>CONTACTOR-MOTOR STARTER**				
CSCF	CONTACTOR-LOADING BELT FORWARD	W9CBW3LB	MESSAGE EW	SEE CSCR FOR PART NUMBER	CONLO/WA BOX

COMPONENT PARTS LIST

COMPONENT NUMBER	FUNCTION OF THIS COMPONENT	WHERE TO FIND THIS COMPONENT	MILNOR P/N	DESCRIPTION	LOCATION
CSCF	CONTACTOR-LOADING BELT FORWARD	W9CBW3LBB	MESSAGE EW	SEE CSCR FOR PART NUMBER	CONLO/WA BOX
CSCR	CONTACTOR-LOADING BELT REVERSE	W9CBW3LB	09MR08D337	24A 3P REV+2N/C 120V5/6 IEC	CONLO/WA BOX
CSCR	CONTACTOR-LOADING BELT REVERSE	W9CBW3LBB	09MR08D337	24A 3P REV+2N/C 120V5/6 IEC	CONLO/WA BOX
CSCR	CONTACTOR-LOADING BELT FORWARD	W9CBW3WA	09MR08D337	24A 3P REV+2N/C 120V5/6 IEC	FLUSH INF BX
CSCR	CONTACTOR-LOADING BELT REVERSE	W9CBW3WAA	09MR08D337	24A 3P REV+2N/C 120V5/6 IEC	FLUSH TANK BX
CSFPM1	CONTACTOR-RECIRC. PUMP MODULE 1	W9CBW3LA	09MC08D337	23A 3P MCS CONT NR 120V5/6	MAIN CNTRL BOX
CSFPM1	CONTACTOR-RECIRC. PUMP MODULE 1	W9CBW3LP	09MC08D337	23A 3P MCS CONT NR 120V5/6	MAIN CNTRL BOX
CSFPM1	CONTACTOR-RECIRC. PUMP MODULE 1	W9CBW3LPB	09MC08D337	23A 3P MCS CONT NR 120V5/6	MAIN CNTRL BOX
CSFPM1	CONTACTOR-RECIRC. PUMP MODULE 1	W9CBW3LP4D	09MC08D337	23A 3P MCS CONT NR 120V5/6	MAIN CNTRL BOX
CSFPM1	CONTACTOR-RECIRC. PUMP MODULE 1	W9CBW3LPD	09MC08D337	23A 3P MCS CONT NR 120V5/6	MAIN CNTRL BOX
CSI	CONTACTOR-INVERTER POWER G3-1, 200-600V	W9CBW3DA	09MC08N337	72A 3P MCS CONT NR 120V5/6	MAIN CNTRL BOX
CSI	CONTACTOR-INVERTER POWER G3-2-4, 346-600V	W9CBW3DA	09MC08N337	72A 3P MCS CONT NR 120V5/6	MAIN CNTRL BOX
CSI	CONTACTOR-INVERTER POWER G4-3-4, 480-600V	W9CBW3DA	09MC08G337	37A 3P MCS CONT NR 120V5/6	MAIN CNTRL BOX
CSI	CONTACTOR-INVERTER POWER G4-2, 200-240V	W9CBW3DA	09MC08L337	60A 3P MCS CONT NR 120V5/6	MAIN CNTRL BOX
CSI	CONTACTOR-INVERTER POWER G4-5-10,346-600V	W9CBW3DA	09MC08N337	72A 3P MCS CONT NR 120V5/6	MAIN CNTRL BOX
CSI	CONTACTOR-INVERTER POWER G4-6-8, 200-240V	W9CBW3DA	09MC08T337	115A 3P MCS CONT. NR 120V5/6	MAIN CNTRL BOX
CSI	CONTACTOR-INVERTER POWER G3-3-4, 200-240V	W9CBW3DA	09MC08T337	115A 3P MCS CONT. NR 120V5/6	MAIN CNTRL BOX
CSI-1	CONTACTOR-INVERTER POWER	W9CBW3DC	09MC08N337	72A 3P MCS CONT NR 120V5/6	MAIN CNTRL BOX
CSI-2	CONTACTOR-INVERTER POWER	W9CBW3DC	09MC08T337	110A 3P MCS CONT. NR 120V5/6	MAIN CNTRL BOX
CSI-3	CONTACTOR-INVERTER POWER	W9CBW3DC	09MC08U337	180A 3P MCS CONT NR 120V5/6	MAIN CNTRL BOX
CSIP1	CONTACTOR FLUSH PUMP TO LAST ZONE	W9CBW3LP3	09MC08D337	23A 3P MCS CONT NR 120V5/6	MAIN CNTRL BOX
CSIP1	CONTACTOR MAIN PULSE FLOW PUMP	W9CBW3LP3D	09MC08E337	30A 3P MCS CONT NR 120B5/6	MAIN CNTRL BOX
CSMF1	CONTACTOR VENT FAN 1	W9CBW3VF	09MC08B337	12A 3P MCS CONT NR 120V5/6	MAIN CNTRL BOX
CSMF2	CONTACTOR VENT FAN 2	W9CBW3VF	09MC08B337	12A 3P MCS CONT NR 120V5/6	MAIN CNTRL BOX
CSMP+	CONTACTOR-ENABLE MENTOR POWER	W9CBW3NA	09MC08D337	23A 3P MCS CONT NR 120V5/6	MENTOR CNSOLE
CSMP+	CONTACTOR-ENABLE MENTOR POWER	W9CBW3NAA	09MC08D337	23A 3P MCS CONT NR 120V5/6	MENTOR CNSOLE
CSMPF	CONTACTOR-FLUSH PUMP MOD 1	W9CBW3LA	09MC08D337	23A 3P MCS CONT NR 120V5/6	MAIN CNTRL BOX
CSMPF	CONTACTOR-FLUSH PUMP MOD 1	W9CBW3LF	09MC08D337	23A 3P MCS CONT NR 120V5/6	MAIN CNTRL BOX
CSMPF	CONTACTOR-FLUSH PUMP TO LD CHUTE	W9CBW3LP1	09MC08D337	23A 3P MCS CONT NR 120V5/6	MAIN CNTRL BOX
CSMPF	CONTACTOR-FLUSH PUMP	W9CBW3LP1D	09MC08D337	23A 3P MCS CONT NR 120V5/6	MAIN CNTRL BOX
CSMPFE	CONTACTOR-PULSE FLOW OR FIRST MID. MOD	W9CBW3LP4	09MC08D337	23A 3P MCS CONT NR 120V5/6	MAIN CNTRL BOX
CSMPFG	CONTACTOR-PULSE FLOW OR SEC. MID. MOD	W9CBW3LP2	09MC08D337	23A 3P MCS CONT NR 120V5/6	MAIN CNTRL BOX
CSMPFH	CONTACTOR-PULSE FLOW OR THIRD MID. MOD	W9CBW3LPA	09MC08E337	30A 3P MCS CONT NR 120B5/6	MAIN CNTRL BOX

COMPONENT PARTS LIST

COMPONENT NUMBER	FUNCTION OF THIS COMPONENT	WHERE TO FIND THIS COMPONENT	MILNOR P/N	DESCRIPTION	LOCATION
CSNPF	CONTACTOR-2ND FLUSH PUMP	W9CBW3LG	09MC08B337	12A 3P MCS CONT NR 120V5/6	MAIN CNTRL BOX
CSP	CONTACTOR-PUMP	W9CBW3SC	09MC08D337	23A 3P MCS CONT NR 120V5/6	SKR SCREEN BX
CSPF	CONTACTOR-FLUSH PUMP MOTOR	W9CBW3WA	09MC08D337	23A 3P MCS CONT NR 120V5/6	FLUSH INF BX
CSPF	CONTACTOR-FLUSH PUMP MOTOR	W9CBW3WAA	09MC08D337	23A 3P MCS CONT NR 120V5/6	FLUSH TANK BX
CSPUP	CONTACTOR-POWER TANK PUMP TO RINSE ZO	W9CBW3ZH	09MC08B337	12A 3P MCS CONT NR 120V5/6	PWR TANK BX
CSPUQ	CONTACTOR-POWER TANK PUMP TO REUSE ZO	W9CBW3ZH	09MC08B337	12A 3P MCS CONT NR 120V5/6	PWR TANK BX
CSS	CONTACTOR-SHAKE	W9CBW3SC	09MC08D337	23A 3P MCS CONT NR 120V5/6	SKR SCREEN BX
CSTP+	CONTACTOR-ENABLE TUNNEL POWER	W9CBW3NA	09MC08D337	23A 3P MCS CONT NR 120V5/6	MENTOR CNSOLE
CSTP+	CONTACTOR-ENABLE TUNNEL POWER	W9CBW3NAA	09MC08D337	23A 3P MCS CONT NR 120V5/6	MENTOR CNSOLE
CSWC	CONTACTOR-CW ROTATION	W9CBW3WA	09MR08D337	24A 3P REV+2N/C 120V5/6 IEC	FLUSH INF BX
CSWC	CONTACTOR-CCW ROTATION	W9CBW3WAA	09MR08D337	24A 3P REV+2N/C 120V5/6 IEC	WASH ZONE BOX
CSWC	CONTACTOR-CW ROTATION	W9CBW3WAA	09MR08D337	24A 3P REV+2N/C 120V5/6 IEC	WASH ZONE BOX
CSWFS	CONTACTOR-WASH ZONE PUMP MOTOR	W9CBW3WA	09MC08B337	12A 3P MCS CONT NR 120V5/6	FLUSH/DRIVE BOX
CSWFS	CONTACTOR-WASH ZONE PUMP MOTOR	W9CBW3WAA	09MC08B337	12A 3P MCS CONT NR 120V5/6	WASH ZONE BOX
CSWFS	CONTACTOR-WASH ZONE PUMP MOTOR	W9CBW3ZA	09MC08B337	12A 3P MCS CONT NR 120V5/6	FLUSH/DRIVE BOX
CSWFS	CONTACTOR-WASH ZONE PUMP MOTOR	W9CBW3ZE	09MC08B337	12A 3P MCS CONT NR 120V5/6	WASH FLOW BX
CSWZP	CONTACTOR-RINSE ZONE FLOW PUMP	W9CBW3WA	09MC08B337	12A 3P MCS CONT NR 120V5/6	FLUSH INF BX
CSWZP	CONTACTOR-RINSE ZONE FLOW PUMP	W9CBW3WAA	09MC08B337	12A 3P MCS CONT NR 120V5/6	RINSE ZN BOX
CSWZP	CONTACTOR-RINSE ZONE FLOW PUMP	W9CBW3ZB	09MC08B337	12A 3P MCS CONT NR 120V5/6	RINSE ZN BOX
CSWZP	CONTACTOR-RINSE ZONE FLOW PUMP	W9CBW3ZG	09MC08B337	12A 3P MCS CONT NR 120V5/6	RINSE ZN BOX
CSWZP	CONTACTOR-RINSE ZONE FLOW PUMP	W9CBW3ZW	09MC08B337	12A 3P MCS CONT NR 120V5/6	RINSE ZN BOX
CSWZR	CONTACTOR-RINSE ZONE SURPLUS PUMP	W9CBW3WA	09MC08B337	12A 3P MCS CONT NR 120V5/6	FLUSH/DRIVE BOX
CSWZR	CONTACTOR-RINSE ZONE SURPLUS PUMP	W9CBW3WAA	09MC08B337	12A 3P MCS CONT NR 120V5/6	RINSE ZN BOX
CSWZR	CONTACTOR-RINSE ZONE SURPLUS PUMP	W9CBW3ZB	09MC08B337	12A 3P MCS CONT NR 120V5/6	RINSE ZN BOX
CSWZR	CONTACTOR-RINSE ZONE SURPLUS PUMP	W9CBW3ZF	09MC08B337	12A 3P MCS CONT NR 120V5/6	AIR VALVE BOX
CSWZR	CONTACTOR-RINSE ZONE SURPLUS PUMP	W9CBW3ZG	09MC08B337	12A 3P MCS CONT NR 120V5/6	RINSE ZN BOX
CSWZR	CONTACTOR-RINSE ZONE SURPLUS PUMP	W9CBW3ZW	09MC08B337	12A 3P MCS CONT NR 120V5/6	RINSE ZN BOX
DS	**>>DISPLAY**				
DSPLY	DISPLAY-MENTOR DIAGNOSTIC	W9CBW3ND	08B1ELC3T	BD:MENTOR DISPLAY BUFFER->TEST	MENTOR CNSOLE
EB	**>>BUZZER OR AUDIBLE SIGNAL**				
EBHNS	BUZZER-MACHINE IN HOLD	W9CBW3NA	09H020	ALARM SONALERT 115V	MENTOR CNSOLE
EBHNS	BUZZER-MACHINE IN HOLD	W9CBW3NAA	09H020	ALARM SONALERT 115V	MENTOR CNSOLE
EBWT	BUZZER-CONWA IS TARING	W9CBW3LC	09H020	ALARM SONALERT 115V	CONLO/WA BOX

COMPONENT PARTS LIST

COMPONENT NUMBER	FUNCTION OF THIS COMPONENT	WHERE TO FIND THIS COMPONENT	MILNOR P/N	DESCRIPTION	LOCATION
EBWT	BUZZER-CONWA IS TARING	W9CBW3LCB	09H020	ALARM SONALERT 115V	CONLO/WA BOX
EBWT	BUZZER-CONWA IS TARING	W9CBW3LCA	09H020	ALARM SONALERT 115V	CONLO/WA BOX
EC	**>>METER**				
ECI	METER-RUN TIME	W9CBW3DA	38C202	HOUR METER 120VAC	WATER INLET
ECI	FAN-INVERTER COOLING	W9CBW3SC	13AF100A37	FAN 92CFM115V60 NEWARK #90F6921	SKR SCREEN BX
ED	**>>ELECTRICAL DELAYS**				
EDWDT	DELAY-CBW ROTATION ERROR	W9CBW3DA	08TF030A37	ELECT ADJ RELAY .5-30 120V5/6	MAIN CNTRL BOX
EDWDT	DELAY-CBW ROTATION ERROR	W9CBW3DC	08TF030A37	ELECT ADJ RELAY .5-30 120V5/6	MAIN CNTRL BOX
EF	**>>FLASHERS**				
EFL	FLASHER-CONWA IS TARING	W9CBW3LC	08FL007537	FLASHER 120V 1AMP 75FL/MIN	CONLO/WA BOX
EFL	FLASHER-CONWA IS TARING	W9CBW3LCB	08FL007537	FLASHER 120V 1AMP 75FL/MIN	CONLO/WA BOX
EFL	FLASHER-CONWA IS TARING	W9CBW3LCA	08FL007537	FLASHER 120V 1AMP 75FL/MIN	CONLO/WA BOX
EFM	**>>COOLING FAN**				
EFM1	FAN-INVERTER COOLING BEFORE 6-1-2010	W9CBW3DA	13AF100A37	FAN 92CFM115V60 NEWARK #90F6921	MAIN CNTRL BOX
EFM1	FAN-INVERTER COOLING AFTER 6-1-2010	W9CBW3DA	13AF235A37	FAN 235CFM 115V 50/60	MAIN CNTRL BOX
EFM1	FAN-INVERTER COOLING	W9CBW3DC	13AF100A37	FAN 92CFM115V60 NEWARK #90F6921	MAIN CNTRL BOX
EFM2	FAN-INVERTER COOLING BEFORE 6-1-2010	W9CBW3DA	13AF100A37	FAN 92CFM115V60 NEWARK #90F6921	MAIN CNTRL BOX
EFM2	FAN-INVERTER COOLING AFTER 6-1-2010	W9CBW3DA	13AF235A37	FAN 235CFM 115V 50/60	MAIN CNTRL BOX
EFM2	FAN-INVERTER COOLING	W9CBW3DC	13AF100A37	FAN 92CFM115V60 NEWARK #90F6921	MAIN CNTRL BOX
EFM3	FAN-MENTOR	W9CBW3NA	13AF100A37	FAN 92CFM115V60 NEWARK #90F6921	MENTOR CNSOLE
EFM3	FAN-MENTOR	W9CBW3NAA	13AF100A37	FAN 92CFM115V60 NEWARK #90F6921	MENTOR CNSOLE
EL	**>>LIGHT-PILOT OR INDICATOR**				
EL1	LIGHT-BELOW SAFETY LEVEL IN PFT TANK	W9CBW3LP5	09J0904S37	LED LIGHT STACK 120V RD,GN,BL,AM	MAIN CNTRL BOX
EL1	LIGHT-BELOW SAFETY LEVEL IN PFT TANK	W9CBW3LP5A	09J0904S37	LED LIGHT STACK 120V RD,GN,BL,AM	MAIN CNTRL BOX
EL2	LIGHT-COUNTS HALFWAY	W9CBW3LP5	09J0904S37	LED LIGHT STACK 120V RD,GN,BL,AM	MAIN CNTRL BOX
EL2	LIGHT-COUNTS HALFWAY	W9CBW3LP5A	09J0904S37	LED LIGHT STACK 120V RD,GN,BL,AM	MAIN CNTRL BOX
EL2W	LIGHT-WASH LIFTER BYPASS FLOW	W9CBW3ZA	09J060A24	LAMP 1/2"AMB 125V IDI #1090QC3-28V	MENTOR CNSOLE
EL2W	LIGHT-WASH LIFTER BYPASS FLOW	W9CBW3ZE	09J060A24	LAMP 1/2"AMB 125V IDI #1090QC3-28V	WASH FLOW BX
EL3	LIGHT-PULSE FLOW ENABLED	W9CBW3LP5	09J0904S37	LED LIGHT STACK 120V RD,GN,BL,AM	MAIN CNTRL BOX
EL3	LIGHT-PULSE FLOW ENABLED	W9CBW3LP5A	09J0904S37	LED LIGHT STACK 120V RD,GN,BL,AM	MAIN CNTRL BOX
EL4	LIGHT-CBW IN HOLD	W9CBW3LP5	09J0904S37	LED LIGHT STACK 120V RD,GN,BL,AM	MAIN CNTRL BOX
EL4	LIGHT-CBW IN HOLD	W9CBW3LP5A	09J0904S37	LED LIGHT STACK 120V RD,GN,BL,AM	MAIN CNTRL BOX
ELCFA	LIGHT-AUTOMATIC STOP	W9CBW3LB	09J060A37	LAMP 1/2" AMB 125V IDI 1050QC3	MENTOR CNSOLE

COMPONENT PARTS LIST

COMPONENT NUMBER	FUNCTION OF THIS COMPONENT	WHERE TO FIND THIS COMPONENT	MILNOR P/N	DESCRIPTION	LOCATION
ELCFA	LIGHT-AUTOMATIC STOP	W9CBW3LBB	09J060A37	LAMP 1/2" AMB 125V IDI 1050QC3	MENTOR CNSOLE
ELCFA	LIGHT-AUTOMATIC STOP	W9CBW3LBA	09J060A37	LAMP 1/2" AMB 125V IDI 1050QC3	CONLO/WA BOX
ELCP+	LIGHT-LOADING CIRCUIT ON	W9CBW3LB	09J060A37	LAMP 1/2" AMB 125V IDI 1050QC3	MENTOR CNSOLE
ELCP+	LIGHT-LOADING CIRCUIT ON	W9CBW3LBB	09J060A37	LAMP 1/2" AMB 125V IDI 1050QC3	MENTOR CNSOLE
ELCP+	LIGHT-LOADING CIRCUIT ON	W9CBW3LBA	09J060A37	LAMP 1/2" AMB 125V IDI 1050QC3	CONLO/WA BOX
ELCWA	LIGHT-CONWA WEIGHT IS HIGH	W9CBW3LC	09J070REC	LITE-STOP 4" RED LENS	CONLO/WA
ELCWA	LIGHT-CONWA WEIGHT IS HIGH	W9CBW3LCB	09J070REC	LITE-STOP 4" RED LENS	CONLO/WA
ELCWA	LIGHT-CONWA WEIGHT IS HIGH	W9CBW3LCA	09J080R12	LIGHTHEAD, LED, 4" ROUND RED	CONLO/WA BOX
ELCWL	LIGHT-CONWA WEIGHT IS LOW	W9CBW3LC	09J070REC	LITE-STOP 4" RED LENS	CONLO/WA
ELCWL	LENS-FOR ELCWL	W9CBW3LC	09J070A12	LENS-AMBER 4" DIETZ A77-15000	CONLO/WA
ELCWL	LIGHT-CONWA WEIGHT IS LOW	W9CBW3LCB	09J070REC	LITE-STOP 4" RED LENS	CONLO/WA
ELCWL	LENS-FOR ELCWL	W9CBW3LCB	09J070A12	LENS-AMBER 4" DIETZ A77-15000	CONLO/WA
ELCWL	LIGHT-CONWA WEIGHT IS LOW	W9CBW3LCA	09J080A12	LIGHTHEAD, LED, 4" ROUND AMBER	CONLO/WA BOX
ELCWO	LIGHT-CONWA WEIGHT IS O.K.	W9CBW3LC	09J070REC	LITE-STOP 4" RED LENS	CONLO/WA
ELCWO	LENS-FOR ELCWO	W9CBW3LC	09J070B12	LENS-BLUE 4" DIETZ #77-15000	CONLO/WA
ELCWO	LIGHT-CONWA WEIGHT IS O.K.	W9CBW3LCB	09J070REC	LITE-STOP 4" RED LENS	CONLO/WA
ELCWO	LENS-FOR ELCWO	W9CBW3LCB	09J070B12	LENS-BLUE 4" DIETZ #77-15000	CONLO/WA
ELCWO	LIGHT-CONWA WEIGHT IS O.K.	W9CBW3LCA	09J080B12	LIGHTHEAD, LED, 4" ROUND BLUE	MENTOR CNSOLE
ELFD	LIGHT-DRAIN FLOW SPLITTER	W9CBW3ZD	09J060A37	LAMP 1/2" AMB 125V IDI 1050QC3	RINSE ZN BOX
ELFNS	LIGHT-MACHINE IN HOLD	W9CBW3NFS	09J080A12	LIGHTHEAD, LED, 4" ROUND AMBER - PAR 36	MENTOR CNSOLE
ELFT	LIGHT-FLUSH TANK WATER VALVE ON	W9CBW3LA	09J060A37	LAMP 1/2" AMB 125V IDI 1050QC3	MAIN CNTRL BOX
ELFT	LIGHT-FLUSH TANK WATER VALVE ON	W9CBW3LF	09J060A37	LAMP 1/2" AMB 125V IDI 1050QC3	MAIN CNTRL BOX
ELFT	LIGHT-FAST FILL PFT TANK	W9CBW3LP	09J060A37	LAMP 1/2" AMB 125V IDI 1050QC3	MAIN CNTRL BOX
ELFT	LIGHT-FAST FILL PFT TANK	W9CBW3LPB	09J060A37	LAMP 1/2" AMB 125V IDI 1050QC3	MAIN CNTRL BOX
ELFT	LIGHT-FAST FILL PFT TANK	W9CBW3LP4D	09J060A37	LAMP 1/2" AMB 125V IDI 1050QC3	MAIN CNTRL BOX
ELFT	LIGHT-FAST FILL PFT TANK	W9CBW3LPD	09J060A37	LAMP 1/2" AMB 125V IDI 1050QC3	MAIN CNTRL BOX
ELHNS	LIGHT-MACHINE IN HOLD	W9CBW3NA	09J060WH37	LAMP 1/2" WHITE 120V TAB	MENTOR CNSOLE
ELHNS	LIGHT-MACHINE IN HOLD	W9CBW3NAA	09J060WH37	LAMP 1/2" WHITE 120V TAB	MENTOR CNSOLE
ELI	LIGHT-MANUAL FLUSH ENABLE	W9CBW3ZF	09J060A37	LAMP 1/2" AMB 125V IDI 1050QC3	MENTOR CNSOLE
ELMP+	LIGHT-MENTOR POWER ENABLED	W9CBW3NA	09J060G37	LAMP 1/2" GRN 125V IDI 1052QC5	MENTOR CNSOLE
ELMP+	LIGHT-MENTOR POWER ENABLED	W9CBW3NAA	09J060G37	LAMP 1/2" GRN 125V IDI 1052QC5	MENTOR CNSOLE
ELMPO	LIGHT-MENTOR POWER OFF	W9CBW3NA	09J060A37	LAMP 1/2" AMB 125V IDI 1050QC3	MENTOR CNSOLE
ELMPO	LIGHT-MENTOR POWER OFF	W9CBW3NAA	09J060A37	LAMP 1/2" AMB 125V IDI 1050QC3	MENTOR CNSOLE

COMPONENT PARTS LIST

COMPONENT NUMBER	FUNCTION OF THIS COMPONENT	WHERE TO FIND THIS COMPONENT	MILNOR P/N	DESCRIPTION	LOCATION
ELNFS	LIGHT-WASH WATER PUMP ENABLE	W9CBW3ZA	09J060A37	LAMP 1/2" AMB 125V IDI 1050QC3	MENTOR CNSOLE
ELNFS	LIGHT-WASH WATER PUMP ENABLE	W9CBW3ZE	09J060A37	LAMP 1/2" AMB 125V IDI 1050QC3	WASH FLOW BX
ELNFT	LIGHT-WASH PUMP SHOULD HAVE RUN	W9CBW3ZA	09J060A37	LAMP 1/2" AMB 125V IDI 1050QC3	MENTOR CNSOLE
ELNFT	LIGHT-WASH PUMP SHOULD HAVE RUN	W9CBW3ZE	09J060A37	LAMP 1/2" AMB 125V IDI 1050QC3	WASH FLOW BX
ELPF	LIGHT-FLUSH PUMP MOD 1 RUNNING	W9CBW3LA	09J060A37	LAMP 1/2" AMB 125V IDI 1050QC3	MENTOR CNSOLE
ELPF	LIGHT-FLUSH PUMP MOD 1 RUNNING	W9CBW3LF	09J060A37	LAMP 1/2" AMB 125V IDI 1050QC3	MAIN CNTRL BOX
ELPFN	LIGHT-FLUSH PUMP SHOULD HAVE RUN	W9CBW3LA	09J060A37	LAMP 1/2" AMB 125V IDI 1050QC3	MENTOR CNSOLE
ELPFN	LIGHT-FLUSH PUMP SHOULD HAVE RUN	W9CBW3LF	09J060A37	LAMP 1/2" AMB 125V IDI 1050QC3	MAIN CNTRL BOX
ELPRS	LIGHT-SURPLUS TO REUSE PUMP RUNNING	W9CBW3ZB	09J060A37	LAMP 1/2" AMB 125V IDI 1050QC3	RINSE ZN BOX
ELPRS	LIGHT-SURPLUS TO REUSE PUMP RUNNING	W9CBW3ZF	09J060A37	LAMP 1/2" AMB 125V IDI 1050QC3	REMOTE MOUNT
ELPRS	LIGHT-SURPLUS TO REUSE PUMP RUNNING	W9CBW3ZG	09J060A37	LAMP 1/2" AMB 125V IDI 1050QC3	RINSE ZN BOX
ELPRS	LIGHT-SURPLUS TO REUSE PUMP RUNNING	W9CBW3ZW	09J060A37	LAMP 1/2" AMB 125V IDI 1050QC3	REUSE TK BOX
ELPRT	LIGHT-SURPLUS TO REUSE PUMP NOT RUNNG	W9CBW3ZB	09J060A37	LAMP 1/2" AMB 125V IDI 1050QC3	RINSE ZN BOX
ELPRT	LIGHT-SURPLUS TO REUSE PUMP NOT RUNNG	W9CBW3ZG	09J060A37	LAMP 1/2" AMB 125V IDI 1050QC3	RINSE ZN BOX
ELPRT	LIGHT-SURPLUS TO REUSE PUMP NOT RUNNG	W9CBW3ZW	09J060A37	LAMP 1/2" AMB 125V IDI 1050QC3	RINSE ZN BOX
ELPS	LIGHT-PUMP SHOULD HAVE RUN	W9CBW3ZH	09J060A37	LAMP 1/2" AMB 125V IDI 1050QC3	PWR TANK BX
ELPWT	LIGHT-RINSE ZONE PUMP DID NOT RUN	W9CBW3ZB	09J060A37	LAMP 1/2" AMB 125V IDI 1050QC3	RINSE ZN BOX
ELPWT	LIGHT-RINSE ZONE PUMP DID NOT RUN	W9CBW3ZG	09J060A37	LAMP 1/2" AMB 125V IDI 1050QC3	RINSE ZN BOX
ELPWT	LIGHT-RINSE ZONE PUMP DID NOT RUN	W9CBW3ZW	09J060A37	LAMP 1/2" AMB 125V IDI 1050QC3	RINSE ZN BOX
ELPWZ	LIGHT-RINSE ZONE FLOW PUMP RUNNING	W9CBW3ZB	09J060A37	LAMP 1/2" AMB 125V IDI 1050QC3	RINSE ZN BOX
ELPWZ	LIGHT-RINSE ZONE FLOW PUMP RUNNING	W9CBW3ZG	09J060A37	LAMP 1/2" AMB 125V IDI 1050QC3	RINSE ZN BOX
ELPWZ	LIGHT-RINSE ZONE FLOW PUMP RUNNING	W9CBW3ZW	09J060A37	LAMP 1/2" AMB 125V IDI 1050QC3	RINSE ZN BOX
ELRD	LIGHT-REUSE TANK TO DRAIN	W9CBW3RA	09J060A37	LAMP 1/2" AMB 125V IDI 1050QC3	MAIN CNTRL BOX
ELSE2	LIGHT-EMERGENCY STOP ILLUMINATED	W9CBW3SD	09N507E	ESTOP SWITCH HEAD RED CLEAR NEEDS 09N	INVERTER BOX
ELSE3	LIGHT-EMERGENCY STOP ILLUMINATED	W9CBW3SD	09N507E	ESTOP SWITCH HEAD RED CLEAR NEEDS 09N	WASH FLOW BX
ELSE4	LIGHT-EMERGENCY STOP ILLUMINATED	W9CBW3SD	09N507E	ESTOP SWITCH HEAD RED CLEAR NEEDS 09N	WASH FLOW BX
ELSE5	LIGHT-EMERGENCY STOP ILLUMINATED	W9CBW3SD	09N507E	ESTOP SWITCH HEAD RED CLEAR NEEDS 09N	WASH FLOW BX
ELSES	LIGHT-EMERGENCY STOP ILLUMINATED	W9CBW3NA	09N507E	ESTOP SWITCH HEAD RED CLEAR NEEDS 09N	MENTOR CNSOLE
ELTP+	LIGHT-TUNNEL POWER ENABLED	W9CBW3NA	09J060G37	LAMP 1/2" GRN 125V IDI 1052QC5	MENTOR CNSOLE
ELTP+	LIGHT-TUNNEL POWER ENABLED	W9CBW3NAA	09J060G37	LAMP 1/2" GRN 125V IDI 1052QC5	MENTOR CNSOLE
ELTPO	LIGHT-TUNNEL POWER OFF	W9CBW3NA	09J060A37	LAMP 1/2" AMB 125V IDI 1050QC3	MENTOR CNSOLE
ELTPO	LIGHT-TUNNEL POWER OFF	W9CBW3NAA	09J060A37	LAMP 1/2" AMB 125V IDI 1050QC3	MENTOR CNSOLE
ELVF1	LIGHT-MODULE 1 VALVE OPEN	W9CBW3LA	09J060A37	LAMP 1/2" AMB 125V IDI 1050QC3	MAIN CNTRL BOX

COMPONENT PARTS LIST

COMPONENT NUMBER	FUNCTION OF THIS COMPONENT	WHERE TO FIND THIS COMPONENT	MILNOR P/N	DESCRIPTION	LOCATION
ELVF1	LIGHT-MODULE 1 VALVE OPEN	W9CBW3LF	09J060A37	LAMP 1/2" AMB 125V IDI 1050QC3	MAIN CNTRL BOX
ELVF1	LIGHT-MODULE 1 VALVE OPEN	W9CBW3LP	09J060A37	LAMP 1/2" AMB 125V IDI 1050QC3	MAIN CNTRL BOX
ELVF1	LIGHT-MODULE 1 VALVE OPEN	W9CBW3LPB	09J060A37	LAMP 1/2" AMB 125V IDI 1050QC3	MAIN CNTRL BOX
ELVF1	LIGHT-MODULE 1 VALVE OPEN	W9CBW3LP4D	09J060A37	LAMP 1/2" AMB 125V IDI 1050QC3	MAIN CNTRL BOX
ELVF1	LIGHT-MODULE 1 VALVE OPEN	W9CBW3LPD	09J060A37	LAMP 1/2" AMB 125V IDI 1050QC3	MAIN CNTRL BOX
ELWT	LIGHT-CONWA IS TARING	W9CBW3LC	09J070REC	LITE-STOP 4" RED LENS	CONLO/WA
ELWT	LENS FOR ELWT	W9CBW3LC	09J070W12	LENS-WH 4" SIGNAL-STAT #9029W	CONLO/WA
ELWT	LIGHT-CONWA IS TARING	W9CBW3LCB	09J070REC	LITE-STOP 4" RED LENS	CONLO/WA
ELWT	LENS FOR ELWT	W9CBW3LCB	09J070W12	LENS-WH 4" SIGNAL-STAT #9029W	CONLO/WA
ELWT	LIGHT-CONWA IS TARING	W9CBW3LCA	09J080C12	LIGHTHEAD, LED, 4" ROUND CLEAR	CONLO/WA BOX
EP	**>>POWER SUPPLY-**				
EPSL	POWER SUPPLY-MACHINE IN HOLD	W9CBW3NFS	08PSS3401T	30 WATT POWER SUPPLY TESTED	MENTOR CNSOLE
ES	**>>POWER SUPPLY-ELECTRONIC**				
ESPC	POWER SUPPLY-COMPUTER	W9CBW3NBA	08PC80427E	PC-SEIMENS SIMATIC 427E WITH UPS	MENTOR CNSOLE
ESPC	POWER SUPPLY-COMPUTER	W9CBW3NBB	08PC80427E	PC-SEIMENS SIMATIC 427E WITH UPS	MENTOR CNSOLE
ESPC	POWER SUPPLY-COMPUTER	W9CBW3NBC	08PC80427E	PC-SEIMENS SIMATIC 427E WITH UPS	MENTOR CNSOLE
ESPS	POWER SUPPLY-MENTOR	W9CBW3NB	08PSS3401T	30 WATT POWER SUPPLY TESTED	MENTOR CNSOLE
ESPS	POWER SUPPLY-MENTOR	W9CBW3NBA	08PSS3401T	30 WATT POWER SUPPLY TESTED	MENTOR CNSOLE
ESPS	POWER SUPPLY-MENTOR	W9CBW3NBB	08PSS3401T	30 WATT POWER SUPPLY TESTED	MENTOR CNSOLE
ET	**>>THERMAL OVERLOAD DEVICES**				
ETNPF	OVERLOAD-PUMP	W9CBW3LG	MESSAGE SO	SEE SPECIFIC COMPONENT+NAMEPLATE	MAIN CNTRL BOX
ETP	OVERLOAD-SHAKER SCREEN PUMP	W9CBW3SC	09FTB016T	OVERLOAD PROTECTOR ADJ. 10-16	SKR SCREEN BX
ETRHT	OVERLOAD-RESISTOR HIGH TEMP. SAFETY	W9CBW3SC	30RA175T	THERMOSTAT OPENS AT 175F	SKR SCREEN BX
ETS	OVERLOAD-SKAKER	W9CBW3SC	09FTB016T	OVERLOAD PROTECTOR ADJ. 10-16	SKR SCREEN BX
EX	**>>TRANSFORMERS**				
EX24	TRANSFORMER-120VAC TO 24VAC	W9CBW3ZB	09U27AB24	XFMR 120-240,110-220/24V 150VA	RINSE ZN BOX
EX24	TRANSFORMER-120VAC TO 24VAC	W9CBW3ZG	09U27AB24	XFMR 120-240,110-220/24V 150VA	RINSE ZN BOX
EX24	TRANSFORMER-120VAC TO 24VAC	W9CBW3ZH	09U27AB24	XFMR 120-240,110-220/24V 150VA	PWR TANK BX
EX24	TRANSFORMER-120VAC TO 24VAC	W9CBW3ZW	09U27AB24	XFMR 120-240,110-220/24V 150VA	RINSE ZN BOX
EX96-A	TRANSFORMER-600V TO 480V INV <3 SECT	W9CBW3WB	09US030A	XFMR 1PH 3KVA 240/480X120/240	RMT SELECTOR
EX96-B	TRANSFORMER-600V TO 480V INV >2 SECT	W9CBW3WB	09US050A	XFMR 1PH 5KVA 240/280X120/240	RMT SELECTOR
EXCL	TRANSFORMER-120V TO 16VAC	W9CBW3LC	09U002EBR	XFMR 120/240 PRI EBR 12VDC	CONLO/WA BOX
EXPWZ9	TRANSFORMER-120V CNTL 600V PRIMARY	W9CBW3ZC	09U251AA37	XFMR 600VPRI/120VSEC/250SEC	RINSE ZN BOX

COMPONENT PARTS LIST

COMPONENT NUMBER	FUNCTION OF THIS COMPONENT	WHERE TO FIND THIS COMPONENT	MILNOR P/N	DESCRIPTION	LOCATION
EXPWZH	TRANSFORMER-120V CNTL >240V PRIMARY	W9CBW3ZC	09U200AAB	ZFMR 380-480V/240-120V 250VA	RINSE ZN BOX
EXPWZL	TRANSFORMER-120V CNTL <250V PRIMARY	W9CBW3ZC	09U250AT71	AUTOXFMR 208V-230V 250VA	RINSE ZN BOX
INV	**>>INVERTER**				
INVD1	BRAKING MODULE-INVERTER G3-4,346-600V	W9CBW3DB	09MVBT50HC	BRAKE MODULE-OPEN CHASSIS	MAIN CNTRL BOX
INVD1	BRAKING MODULE-INVERTER G4-6-9, 480-600V	W9CBW3DB	09MVBT50HC	BRAKE MODULE-OPEN CHASSIS	MAIN CNTRL BOX
INVD1	BRAKING MODULE-INVERTER G3-3-4, 200-240V	W9CBW3DB	09MVBT25LC	BRAKEMODULE OPEN CHASIS INVERT	MAIN CNTRL BOX
INVD1	BRAKING MODULE-INVERTER G4-6-8,208V	W9CBW3DB	09MVBT25LC	BRAKEMODULE OPEN CHASIS INVERT	MAIN CNTRL BOX
INVD1	BRAKING MODULE-INVERTER	W9CBW3DD	MESSAGE SO	SEE SPECIFIC COMPONENT+NAMEPLATE	MAIN CNTRL BOX
INVD2	BRAKING MODULE-INVERTER G3-4,346-600V	W9CBW3DB	09MVBT50HC	BRAKE MODULE-OPEN CHASSIS	MAIN CNTRL BOX
INVD2	BRAKING MODULE-INVERTER G4-6-9, 480-600V	W9CBW3DB	09MVBT50HC	BRAKE MODULE-OPEN CHASSIS	MAIN CNTRL BOX
INVD2	BRAKING MODULE-INVERTER G3-3-4, 200-240V	W9CBW3DB	09MVBT25LC	BRAKEMODULE OPEN CHASIS INVERT	MAIN CNTRL BOX
INVD2	BRAKING MODULE-INVERTER G4-6-8,208V	W9CBW3DB	09MVBT25LC	BRAKEMODULE OPEN CHASIS INVERT	MAIN CNTRL BOX
INVIP1 (HV-5HP)	INVERTER-PULSEFLOW TANK TO LAST ZONE	W9CBW3LP3	09MWB00996	V1000 INVERTER 9.2AMP 460V	MAIN CNTRL BOX
INVIP1 (HV-7.5HP)	INVERTER-PULSEFLOW TANK TO LAST ZONE	W9CBW3LP3	09MWB01596	V1000 INVERTER 15AMP 460V	MAIN CNTRL BOX
INVIP1 (HV-7.5HP)	INVERTER-PULSEFLOW TANK TO LAST ZONE	W9CBW3LP3D	09MWB01596	V1000 INVERTER 15AMP 460V	MAIN CNTRL BOX
INVIP1 (LV-5HP)	INVERTER-PULSEFLOW TANK TO LAST ZONE	W9CBW3LP3	09MWB01774	V1000 INVERTER 17.5AMP 230V	MAIN CNTRL BOX
INVIP1 (LV-7.5HP)	INVERTER-PULSEFLOW TANK TO LAST ZONE	W9CBW3LP3	09MWB02574	V1000 INVERTER 25AMP 230V	MAIN CNTRL BOX
INVIP1 (LV-7.5HP)	INVERTER-PULSEFLOW TANK TO LAST ZONE	W9CBW3LP3D	09MWB02574	V1000 INVERTER 25AMP 230V	MAIN CNTRL BOX
INVMPFE (HV)	INVERTER-PULSEFLOW MOD TO MOD DISCH	W9CBW3LP4	09MWB01596	V1000 INVERTER 15AMP 460V	SEE FUNCTION
INVMPFE (LV)	INVERTER-PULSEFLOW MOD TO MOD DISCH	W9CBW3LP4	09MWB02574	V1000 INVERTER 25AMP 230V	SEE FUNCTION
INVMPFG (HV)	INVERTER-PULSEFLOW MOD TO MOD LD END	W9CBW3LP2	09MWB01596	V1000 INVERTER 15AMP 460V	MAIN CNTRL BOX
INVMPFG (LV)	INVERTER-PULSEFLOW MOD TO MOD LD END	W9CBW3LP2	09MWB02574	V1000 INVERTER 25AMP 230V	MAIN CNTRL BOX
INVMPFH (HV)	INVERTER-ALT PULSEFLOW PUMP	W9CBW3LPA	09MWB01596	V1000 INVERTER 15AMP 460V	MAIN CNTRL BOX
INVPMPFH (LV)	INVERTER-ALT PULSEFLOW PUMP	W9CBW3LPA	09MWB02574	V1000 INVERTER 25AMP 230V	MAIN CNTRL BOX
INVRIP1	REACTOR HV-PF TANK TO LAST ZONE 5HP	W9CBW3LP3	09MX050A96	REACTOR LV/HV 3%/1.5% 5HP 460V-2HP 230V	MAIN CNTRL BOX
INVRIP1	REACTOR LV-PF TANK TO LAST ZONE 5HP	W9CBW3LP3	09MX100A96	REACTOR LV/HV 3%/1.5% 10HP 460V-5HP 230'	MAIN CNTRL BOX
INVRMPFE (HV)	REACTOR-PULSEFLOW MOD TO MOD DISCH	W9CBW3LP4	09MX050A96	REACTOR LV/HV 3%/1.5% 5HP 460V-2HP 230V	MAIN CNTRL BOX
INVRMPFE (LV)	REACTOR-PULSEFLOW MOD TO MOD DISCH	W9CBW3LP4	09MX100A96	REACTOR LV/HV 3%/1.5% 10HP 460V-5HP 230'	MAIN CNTRL BOX
INVRMPFG	REACTOR HV-PF MOD TO MOD LD END 5HP	W9CBW3LP2	09MX050A96	REACTOR LV/HV 3%/1.5% 5HP 460V-2HP 230V	MAIN CNTRL BOX
INVRMPFG	REACTOR LV-PF MOD TO MOD LD END 5HP	W9CBW3LP2	09MX100A96	REACTOR LV/HV 3%/1.5% 10HP 460V-5HP 230'	MAIN CNTRL BOX
KB	**>>KEYBOARD-ELECTRONIC**				
KEYBD	KEYPAD-PC	W9CBW3NB	08PCME005K	KEYBOARD PS1 104KEY WIN95	MENTOR CNSOLE
KEYBD	KEYPAD-PC	W9CBW3NBA	08PCME005K	KEYBOARD PS1 104KEY WIN95	MENTOR CNSOLE

COMPONENT PARTS LIST

COMPONENT NUMBER	FUNCTION OF THIS COMPONENT	WHERE TO FIND THIS COMPONENT	MILNOR P/N	DESCRIPTION	LOCATION
KEYBD	KEYPAD-PC	W9CBW3NBB	08PCME005K	KEYBOARD PS1 104KEY WIN95	MENTOR CNSOLE
M	**>>MOUSE**				
MDIP1	MOTOR-TANK TO CHUTE	W9CBW3LP3	27E935A96	PUMP 2"X1.5" W/ 4.75" IMPELLER 5HP #11019A	MAIN CNTRL BOX
MDIPA	MOTOR-PUMP FRESH	W9CBW3LP3D	27E935A96	PUMP 2"X1.5" W/ 4.75" IMPELLER 5HP #11019A	1ST SECTION
MDIPB	MOTOR-PUMP REUSE	W9CBW3LP3D	27E935A96	PUMP 2"X1.5" W/ 4.75" IMPELLER 5HP #11019A	1ST SECTION
MN1	MONITOR-TOUCHSCREEN	W9CBW3NBC	MESSAGE EW	SEE Q7 PROCESSOR ASSEMBLY	MENTOR CNSOLE
MOUSE	MOUSE-PC	W9CBW3NB	09PCME001M	MOUSE PS2 2BUTTON MICROSOFT	MENTOR CNSOLE
MOUSE	MOUSE-PC	W9CBW3NBA	09PCME001M	MOUSE PS2 2BUTTON MICROSOFT	MENTOR CNSOLE
MOUSE	MOUSE-PC	W9CBW3NBB	09PCME001M	MOUSE PS2 2BUTTON MICROSOFT	MENTOR CNSOLE
MT	MOTOR-DRIVE G3 SL/MID	W9CBW3DA	39G813BBT	5HP 4P OLSW 380/480 50/6 C-FCE	END OF SECTION
MT	MOTOR-DRIVE FIRST/LAST	W9CBW3DA	39G820ABT	10HP 4P 200/400/3/60 C-FACE	END OF SECTION
MT	MOTOR-DRIVE G4/MID	W9CBW3DA	39G816BBT	6HP 4P OLSW 380/480 50/6 C-FCE	END OF SECTION
MT	**>>MOTORS**				
MTB	MOTOR-CONLO BELT	W9CBW3WAA	39T010DAU	1HP 6P TENV C56 6#BRAKE-UNIV	CONLO/WA
MTB2	MOTOR-CONLO BELT #2	W9CBW3WAA	39T010DAU	1HP 6P TENV C56 6#BRAKE-UNIV	CONLO/WA
MTD	MOTOR-PUMP	W9CBW3LP4	27E935A96	PUMP 2"X1.5" W/ 4.75" IMPELLER 5HP #11019A	1ST SECTION
MTIP1	MOTOR-PUMP	W9CBW3LP1	27E935A96	PUMP 2"X1.5" W/ 4.75" IMPELLER 5HP #11019A	1ST SECTION
MTIP1	MOTOR-PULSE FLOW FLUSH	W9CBW3LP1	27E935A96	PUMP 2"X1.5" W/ 4.75" IMPELLER 5HP #11019A	1ST SECTION
MTMPFG	MOTOR-2ND MID MODULE PUMP	W9CBW3LP2	27E935A96	PUMP 2"X1.5" W/ 4.75" IMPELLER 5HP #11019A	MID SECTION
MTMPFH	MOTOR-PUMP ALT PULSE FLOW	W9CBW3LPA	27E935A96	PUMP 2"X1.5" W/ 4.75" IMPELLER 5HP #11019A	1ST SECTION
MTNPF	MOTOR-2ND FLUSH PUMP	W9CBW3LG	MESSAGE SO	SEE SPECIFIC COMPONENT+NAMEPLATE	SEE FUNCTION
MTP	MOTOR-PUMP SHAKER SCREEN	W9CBW3SC	27E935B96S	PUMP VORTEX 2"X1.5" W/ 5" IMPELLER 5HP/7	SHAKER SCREEN
MTS	MOTOR-SHAKER	W9CBW3SC	MESSAGE SW	FURNISHED WITH SHAKER	SHAKER SCREEN
MV	**>>INVERTER**				
MVINS	INVERTER	W9CBW3SC	09MWB01596	V1000 INVERTER 15AMP 460V	SKR SCREEN BX
MVINV	INVERTER-DRIVE G3-1, 200-240V	W9CBW3DA	09MWC04774	A1000 INVERTER 47 AMP	MAIN CNTRL BOX
MVINV	INVERTER-DRIVE G3-1, 346-440V	W9CBW3DA	09MWA03196	F7 INVERTER 31 AMP	MAIN CNTRL BOX
MVINV	INVERTER-DRIVE G3-1, 480-600V	W9CBW3DA	09MWA02496	F7 INVERTER 24 AMP	MAIN CNTRL BOX
MVINV	INVERTER-DRIVE G3-2, 200-240V	W9CBW3DA	09MWA07174	F7 INVERTER 71AMP	MAIN CNTRL BOX
MVINV	INVERTER-DRIVE G3-2, 346-440V	W9CBW3DA	09MWC06096	A1000 INVERTER 60 AMP	MAIN CNTRL BOX
MVINV	INVERTER-DRIVE G3-2, 480-600V	W9CBW3DA	09MWA03996	INVERTER 39AMPS 480V F7	MAIN CNTRL BOX
MVINV	INVERTER-DRIVE G3-3, 200-240V	W9CBW3DA	09MWC11574	A1000 INVERTER 115AMP	MAIN CNTRL BOX
MVINV	INVERTER-DRIVE G3-3, 346-440V	W9CBW3DA	09MWC07596	A1000 INVERTER 75 AMP	MAIN CNTRL BOX

COMPONENT PARTS LIST

COMPONENT NUMBER	FUNCTION OF THIS COMPONENT	WHERE TO FIND THIS COMPONENT	MILNOR P/N	DESCRIPTION	LOCATION
MVINV	INVERTER-DRIVE G3-3, 480-600V	W9CBW3DA	09MWC06096	A1000 INVERTER 60 AMP	MAIN CNTRL BOX
MVINV	INVERTER-DRIVE G4-2, 200-240V	W9CBW3DA	09MWC04774	A1000 INVERTER 47 AMP	MAIN CNTRL BOX
MVINV	INVERTER-DRIVE G4-3, 480-600V	W9CBW3DA	09MWA03996	INVERTER 39AMPS 480V F7	MAIN CNTRL BOX
MVINV	INVERTER-DRIVE G4-4, 480-600V	W9CBW3DA	09MWC04596	A1000 INVERTER 45 AMP	MAIN CNTRL BOX
MVINV	INVERTER-DRIVE G4-5, 346-440V	W9CBW3DA	09MWC07596	A1000 INVERTER 75 AMP	MAIN CNTRL BOX
MVINV	INVERTER-DRIVE G4-6, 200-240V	W9CBW3DA	09MWC14574	A1000 INVERTER 145AMPS	MAIN CNTRL BOX
MVINV	INVERTER-DRIVE G4-6-7, 480-600V	W9CBW3DA	09MWC07596	A1000 INVERTER 75 AMP	MAIN CNTRL BOX
MVINV	INVERTER-DRIVE G4-8, 200-240V	W9CBW3DA	09MC08T337	115A 3P MCS CONT. NR 120V5/6	MAIN CNTRL BOX
MVINV	INVERTER-DRIVE G4-8-9, 480-600V	W9CBW3DA	09MWC09196	A1000 INVERTER 91 AMP	MAIN CNTRL BOX
MVLF	LINE FILTER	W9CBW3LP2	09MVFILTR1	RFI NOISE INPUT FILTER - 600V	MAIN CNTRL BOX
MVLF	LINE FILTER	W9CBW3LP3	09MVFILTR1	RFI NOISE INPUT FILTER - 600V	MAIN CNTRL BOX
MVLF	LINE FILTER	W9CBW3LP3D	09MVFILTR1	RFI NOISE INPUT FILTER - 600V	MAIN CNTRL BOX
MVLF	LINE FILTER	W9CBW3LP4	09MVFILTR1	RFI NOISE INPUT FILTER - 600V	MAIN CNTRL BOX
MVLF	LINE FILTER	W9CBW3LPA	09MVFILTR1	RFI NOISE INPUT FILTER - 600V	MAIN CNTRL BOX
MVRS	REACTOR-INLINE	W9CBW3SC	09MX100A96	REACTOR LV/HV 3%/1.5% 10HP 460V-5HP 23C	SKR SCREEN BX
PH PROBE	PROBE-PH	W9CBW3JE	09XSPH0001	ROSEMOUNT PH 3900VP	FRONT OF TUNNEL
PROBE	**>>PROBE**				
PS	**>>POWER SUPPLY-ELECTRONIC**				
PS24	POWER SUPPLY-24VDC SUPPLY	W9CBW3SE	08PSL1B224	PWR SUP 100-240VAC TO 24VDC	INVERTER BOX
PSCL	POWER SUPPLY-120V TO 12VDC	W9CBW3LCB	08PSS2401T	PRW SUPY 40WATT 120/240V TO 12V TESTED	CONWA BOX
PSCL	POWER SUPPLY-CONWA LIGHTS	W9CBW3LCA	08PSS21225	PWRSUP25W 5/12OUT 85-264VAC/IN	CONLO/WA BOX
PSO	POWER SUPPLY-STD I/O	W9CBW3SG	08PSS3401T	30 WATT POWER SUPPLY TESTED	MAIN CNTRL BOX
PX	**>>PROXIMITY SWITCH**				
PXDA	PROX SWITCH-CHUTE DOWN	W9CBW3LH	09RPS30ADU	PRXSW QK CONN 30M NO-DC UNSHLD	LOAD CHUTE
PXDB	PROX SWITCH-CHUTE DOWN	W9CBW3LH	09RPS30ADU	PRXSW QK CONN 30M NO-DC UNSHLD	LOAD CHUTE
PXUA	PROX SWITCH-CHUTE UP	W9CBW3LH	09RPS30ADU	PRXSW QK CONN 30M NO-DC UNSHLD	LOAD CHUTE
PXUB	PROX SWITCH-CHUTE UP	W9CBW3LH	09RPS30ADU	PRXSW QK CONN 30M NO-DC UNSHLD	LOAD CHUTE
RES	**>>INVERTER RESISTORS**				
RES-03	RESISTOR-DYNAMIC BRAKE G3-2, 346-600V	W9CBW3DB	09MV020RET	RESISTOR 19.4OHM 1000 WATT	MAIN CNTRL BOX
RES-03	RESISTOR-DYNAMIC BRAKE G3-2-4, 200-240V	W9CBW3DB	09MV003RET	RESISTOR 3.35OHM 1000 WATT	MAIN CNTRL BOX
RES-03	RESISTOR-DYNAMIC BRAKE G4-6-8, 208V	W9CBW3DB	09MV003RET	RESISTOR 3.35OHM 1000 WATT	MAIN CNTRL BOX
RES-10	RESISTOR-DYNAMIC BRAKE G3-1, 200-440v	W9CBW3DB	09MV010RES	RESISTOR 10 OHM 300 WATT	MAIN CNTRL BOX
RES-100	RESISTOR-DYNAMIC BRAKE	W9CBW3LP2	09MV100RES	RESIST 100 OHM 225WATT ADJ	MAIN CNTRL BOX

COMPONENT PARTS LIST

COMPONENT NUMBER	FUNCTION OF THIS COMPONENT	WHERE TO FIND THIS COMPONENT	MILNOR P/N	DESCRIPTION	LOCATION
RES-100	RESISTOR-DYNAMIC BRAKE	W9CBW3LP3	09MV100RES	RESIST 100 OHM 225WATT ADJ	MAIN CNTRL BOX
RES-100	RESISTOR-DYNAMIC BRAKE	W9CBW3LP4	09MV100RES	RESIST 100 OHM 225WATT ADJ	MAIN CNTRL BOX
RES-11	RESISTOR-DYNAMIC BRAKE G3-4,480V	W9CBW3DB	09MV011RET	RESISTOR 11 OHM 1000 WATT	MAIN CNTRL BOX
RES-20	RESISTOR-DYNAMIC BRAKE G4-3-10,480V	W9CBW3DB	09MV020RES	RESISTOR 20 OHM 300WATT	MAIN CNTRL BOX
RES-20	RESISTOR-DYNAMIC BRAKE G4-2, 208V	W9CBW3DB	09MV020RET	RESISTOR 19.4OHM 1000 WATT	MAIN CNTRL BOX
RES-20	RESISTOR-DYNAMIC BRAKE G3-3, 480-600V	W9CBW3DB	09MV020RET	RESISTOR 19.4OHM 1000 WATT	MAIN CNTRL BOX
RP	**>>PROXIMITY SWITCH**				
RPX1	PROX SW-CW LEFT LOAD END	W9CBW3SE	09RPS30ADU	PRXSW QK CONN 30M NO-DC UNSHLD	END OF FIRST SEC
RPX2	PROX SW-CCW RIGHT LOAD END	W9CBW3SE	09RPS30ADU	PRXSW QK CONN 30M NO-DC UNSHLD	END OF FIRST SEC
RPX2	PROX SW-ROTATION COUNTER CW NORMAL	W9CBW3SJ	09RPS30ADU	PRXSW QK CONN 30M NO-DC UNSHLD	END OF FIRST SEC
RPX3	PROX SW-SAFETY RT DISCHARGE END	W9CBW3SE	09RPS30ADU	PRXSW QK CONN 30M NO-DC UNSHLD	END OF FIRST SEC
RPX4	PROX SW-TRANSFER LF DISCHARGE END	W9CBW3SE	09RPS30ADU	PRXSW QK CONN 30M NO-DC UNSHLD	END OF FIRST SEC
RPX5	PROX SW-ALIGN	W9CBW3SE	09RPS30ADU	PRXSW QK CONN 30M NO-DC UNSHLD	END OF FIRST SEC
RPX6	PROX SW-ALIGN	W9CBW3SE	09RPS30ADU	PRXSW QK CONN 30M NO-DC UNSHLD	FRNT OF 2ND SEC
RPXA	PROX SW-ROTATION COUNTER CW NORMAL	W9CBW3SJ	09RPS30ADU	PRXSW QK CONN 30M NO-DC UNSHLD	FRNT OF 2ND SEC
SH	**>>SWITCH-HAND OPERATED**				
SH1	SWITCH-ENABLE MANUAL FLUSH	W9CBW3ZF	09N405M211	SWASS M2W 1NO+1NC	WASH FLOW BX
SHCMA	SWITCH-MASTER LOADING CIRCUIT	W9CBW3LB	09N405M220	SWASS M2W 2NO	MENTOR CNSOLE
SHCMA	SWITCH-MASTER LOADING CIRCUIT	W9CBW3LBB	09N405M220	SWASS M2W 2NO	MENTOR CNSOLE
SHCMA	SWITCH-MASTER LOADING CIRCUIT	W9CBW3LBA	09N405M220	SWASS M2W 2NO	CONLO/WA BOX
SHCMA	SWITCH-MASTER LOADING CIRCUIT	W9CBW3LD	09N405M220	SWASS M2W 2NO	CONLO/WA BOX
SHCME	SWITCH-O.K. TO PASS EMPTY LOADED	W9CBW3LD	09N405M210	SWASS M2W 1NO	CONLO/WA BOX
SHCMO	SWITCH-LOADING BELT MODE SELECTOR	W9CBW3LB	09N405M240	SWASS M2W 4NO	MENTOR CNSOLE
SHCMO	SWITCH-LOADING BELT MODE SELECTOR	W9CBW3LBB	09N405M240	SWASS M2W 4NO	MENTOR CNSOLE
SHCMO	SWITCH-LOADING BELT MODE SELECTOR	W9CBW3LBA	09N405M240	SWASS M2W 4NO	CONLO/WA BOX
SHCMO	SWITCH-LOADING BELT MODE SELECTOR	W9CBW3LD	09N405M240	SWASS M2W 4NO	CONLO/WA BOX
SHDTF	SWITCH-ENABLE FLUSH WHEN DRAINING	W9CBW3LF	09N405M210	SWASS M2W 1NO	MAIN CNTRL BOX
SHED2	SWITCH-EMERG STOP 1ST MOD RIGHT SIDE	W9CBW3SD	09N505	SW ASSY EMER STOP	INVERTER BOX
SHED2	SWITCH-EMERG STOP 1ST MOD RIGHT SIDE	W9CBW3SD	09N507F	ESTOP CONTACT BLOCK WITH 120VAC LIGHT	INVERTER BOX
SHED3	SWITCH-EMERG STOP 1ST MOD LEFT SIDE	W9CBW3SD	09N505	SW ASSY EMER STOP	WASH FLOW BX
SHED3	SWITCH-EMERG STOP 1ST MOD LEFT SIDE	W9CBW3SD	09N507F	ESTOP CONTACT BLOCK WITH 120VAC LIGHT	WASH FLOW BX
SHED4	SWITCH-EMERG STOP LAST MOD LEFT SIDE	W9CBW3SD	09N505	SW ASSY EMER STOP	WASH FLOW BX
SHED4	SWITCH-EMERG STOP LAST MOD LEFT SIDE	W9CBW3SD	09N507F	ESTOP CONTACT BLOCK WITH 120VAC LIGHT	WASH FLOW BX

COMPONENT PARTS LIST

COMPONENT NUMBER	FUNCTION OF THIS COMPONENT	WHERE TO FIND THIS COMPONENT	MILNOR P/N	DESCRIPTION	LOCATION
SHED5	SWITCH-EMERG STOP LAST MOD RIGHT SIDE	W9CBW3SD	09N505	SW ASSY EMER STOP	WASH FLOW BX
SHED5	SWITCH-EMERG STOP LAST MOD RIGHT SIDE	W9CBW3SD	09N507F	ESTOP CONTACT BLOCK WITH 120VAC LIGHT	WASH FLOW BX
SHEF	SWITCH-ENABLE FILL TANK	W9CBW3ZH	09N405M210	SWASS M2W 1NO	PWR TANK BX
SHEP1	SWITCH-EMERG. PULL STRINGS INTERM.	W9CBW3SD	09RS0002	PULL-WIRE SW SCHMERSAL#ZQ 700-11	SIDE OF BELT
SHEP2	SWITCH-EMERG. PULL STRINGS INTERM. BELT	W9CBW3SD	09RS0002	PULL-WIRE SW SCHMERSAL#ZQ 700-11	SIDE OF BELT
SHESS	SWITCH-EMERG.STOP ON SHAKER CONTROL	W9CBW3SC	09N505	SW ASSY EMER STOP	SKR SCREEN BX
SHEST	SWITCH-TEST DRIVE	W9CBW3DA	09N405S320	SWASS S3W 2NO	MAIN CNTRL BOX
SHEST	SWITCH-TEST DRIVE	W9CBW3DC	09N405S320	SWASS S3W 2NO	MAIN CNTRL BOX
SHFI	SWITCH-ENABLE FLUSH VALVE	W9CBW3LA	09N405PB10	SWASS PBBK 1NO	MAIN CNTRL BOX
SHFI	SWITCH-ENABLE FLUSH VALVE	W9CBW3LF	09N405PB10	SWASS PBBK 1NO	MAIN CNTRL BOX
SHFI	SWITCH-ENABLE FLUSH VALVE	W9CBW3LP	09N405PB10	SWASS PBBK 1NO	MAIN CNTRL BOX
SHFI	SWITCH-ENABLE FLUSH VALVE	W9CBW3LPB	09N405PB10	SWASS PBBK 1NO	MAIN CNTRL BOX
SHFI	SWITCH-ENABLE FLUSH VALVE	W9CBW3LP4D	09N405PB10	SWASS PBBK 1NO	MAIN CNTRL BOX
SHFI	SWITCH-ENABLE FLUSH VALVE	W9CBW3LPD	09N405PB10	SWASS PBBK 1NO	MAIN CNTRL BOX
SHFLT	SWITCH-ENABLE PUMP WHEN DRAINING	W9CBW3LF	09N405M210	SWASS M2W 1NO	MAIN CNTRL BOX
SHFLT	SWITCH-ENABLE PUMP WHEN DRAINING	W9CBW3RA	09N405M210	SWASS M2W 1NO	MAIN CNTRL BOX
SHFR	SWITCH-LOADING BELT DIRECTION	W9CBW3LB	09N405S320	SWASS S3W 2NO	MENTOR CNSOLE
SHFR	SWITCH-LOADING BELT DIRECTION	W9CBW3LBB	09N405S320	SWASS S3W 2NO	MENTOR CNSOLE
SHFR	SWITCH-LOADING BELT DIRECTION	W9CBW3LBA	09N405S320	SWASS S3W 2NO	CONLO/WA BOX
SHHNS	SWITCH-CANCEL HORN	W9CBW3NA	09N405PY10	SWASS PB YELLOW IND	MENTOR CNSOLE
SHHNS	SWITCH-CANCEL HORN	W9CBW3NAA	09N405PY10	SWASS PB YELLOW IND	MENTOR CNSOLE
SHMD	SWITCH-DISCONNECT MOTOR	W9CBW3SD	09N042204	ROTARY DISCON 10A 600V 2POS 4P	WASH FLOW BX
SHMD	SWITCH-DISCONNECT MOTOR	W9CBW3WA	09N042204	ROTARY DISCON 10A 600V 2POS 4P	WASH FLOW BX
SHMD	SWITCH-DISCONNECT MOTOR	W9CBW3WAA	09N042204	ROTARY DISCON 10A 600V 2POS 4P	CONLO/WA BOX
SHMP1	SWITCH-MENTOR POWER ON	W9CBW3NA	09N405PB01	SWASS PB BLUE 1NC	MENTOR CNSOLE
SHMP1	SWITCH-MENTOR POWER ON	W9CBW3NAA	09N405PB01	SWASS PB BLUE 1NC	MENTOR CNSOLE
SHMPO	SWITCH-MENTOR POWER OFF	W9CBW3NA	09N405PR01	SWASS PBRD 1NC	MENTOR CNSOLE
SHMPO	SWITCH-MENTOR POWER OFF	W9CBW3NAA	09N405PR01	SWASS PBRD 1NC	MENTOR CNSOLE
SHMPO	SWITCH-MENTOR POWER OFF	W9CBW3NC	09N405PR01	SWASS PBRD 1NC	RINSE ZN BOX
SHNS5	SWITCH-TUNNEL IN HOLD	W9CBW3NC	09N405M210	SWASS M2W 1NO	WASH FLOW BX
SHO1	SWITCH-TEST OILER	W9CBW3SA	09N405M211	SWASS M2W 1NO+1NC	WASH FLOW BX
SHP	SWITCH-DISABLE PUMP	W9CBW3ZH	09N405M210	SWASS M2W 1NO	PWR TANK BX
SHPF	SWITCH-FLUSH PUMP OFF/AUTOMATIC	W9CBW3LA	09N405M210	SWASS M2W 1NO	MAIN CNTRL BOX

COMPONENT PARTS LIST

COMPONENT NUMBER	FUNCTION OF THIS COMPONENT	WHERE TO FIND THIS COMPONENT	MILNOR P/N	DESCRIPTION	LOCATION
SHPF	SWITCH-FLUSH PUMP OFF/AUTOMATIC	W9CBW3LF	09N405M210	SWASS M2W 1NO	MAIN CNTRL BOX
SHPF	SWITCH-FLUSH PUMP OFF/AUTOMATIC	W9CBW3LP	09N405M210	SWASS M2W 1NO	MAIN CNTRL BOX
SHPF	SWITCH-FLUSH PUMP OFF/AUTOMATIC	W9CBW3LPB	09N405M210	SWASS M2W 1NO	MAIN CNTRL BOX
SHPF	SWITCH-FLUSH PUMP OFF/AUTOMATIC	W9CBW3LPD	09N405M210	SWASS M2W 1NO	MAIN CNTRL BOX
SHPRS	SWITCH-RINSE ZONE SURPLUS PUMP	W9CBW3ZB	09N405M210	SWASS M2W 1NO	RINSE ZN BOX
SHPRS	SWITCH-RINSE ZONE SURPLUS PUMP	W9CBW3ZG	09N405M210	SWASS M2W 1NO	RINSE ZN BOX
SHPRS	SWITCH-RINSE ZONE SURPLUS PUMP	W9CBW3ZW	09N405M210	SWASS M2W 1NO	RINSE ZN BOX
SHPWZ	SWITCH-RINSE ZONE PUMP	W9CBW3ZB	09N405M210	SWASS M2W 1NO	RINSE ZN BOX
SHPWZ	SWITCH-RINSE ZONE PUMP	W9CBW3ZG	09N405M210	SWASS M2W 1NO	RINSE ZN TANK
SHPWZ	SWITCH-RINSE ZONE PUMP	W9CBW3ZW	09N405M210	SWASS M2W 1NO	RINSE ZN BOX
SHRC	SWITCH-RESET COUNTERS	W9CBW3ND	09N405PB01	SWASS PB BLUE INC	MENTOR CNSOLE
SHRF	SWITCH-MOVE BRUSH	W9CBW3ZJ	09N405PB10	SWASS PBBK 1NO	FLOW SPLIT BOX
SHSC	SWITCH-LOAD CONVEYOR ON/OFF	W9CBW3NC	09N405M211	SWASS M2W 1NO+1NC	RINSE ZN BOX
SHSDL	SWITCH-MANUAL STM DISINFECT (KEY OPER)	W9CBW3FS	09N127C	KEYSW SPST 7A120VAC SCREW TERM	MAIN CNTRL BOX
SHSDT	SWITCH-STEAM DISINFECT TEST	W9CBW3FS	09N405S320	SWASS S3W 2NO	MAIN CNTRL BOX
SHSG	SWITCH-LOAD CHUTE EYE BLOCK TOO LG OK	W9CBW3NC	MESSAGE MS	REMOTE MOUNTED SWITCH BY OTHERS	RINSE ZN BOX
SHTL	SWITCH-TEST LAMP	W9CBW3LBB	09N405PB11	SWASS PBBK 1NO/1NC	CONTROL BOX
SHTL	SWITCH-TEST LAMP	W9CBW3LCB	09N405PB11	SWASS PBBK 1NO/1NC	CONTROL BOX
SHTL	SWITCH-TEST LAMP	W9CBW3LPB	09N405PB11	SWASS PBBK 1NO/1NC	CONTROL BOX
SHTL	SWITCH-TEST LAMP	W9CBW3LP5A	09N405PB11	SWASS PBBK 1NO/1NC	CONTROL BOX
SHTL	SWITCH-TEST LAMP	W9CBW3NAA	09N405PB11	SWASS PBBK 1NO/1NC	CONTROL BOX
SHTP1	SWITCH-TUNNEL POWER ON	W9CBW3NA	09N405PG10	SWASS PBGN 1NO	MENTOR CNSOLE
SHTP1	SWITCH-TUNNEL POWER ON	W9CBW3NAA	09N405PG10	SWASS PBGN 1NO	MENTOR CNSOLE
SHTPO	SWITCH-TUNNEL POWER OFF	W9CBW3NA	09N505	SW ASSY EMER STOP	MENTOR CNSOLE
SHTPO	SWITCH-TUNNEL POWER OFF	W9CBW3NA	09N507F	ESTOP CONTACT BLOCK WITH 120VAC LIGHT	MENTOR CNSOLE
SHTPO	SWITCH-TUNNEL POWER OFF	W9CBW3NAA	09N505	SW ASSY EMER STOP	MENTOR CNSOLE
SHWFS	SWITCH-WASH WATER FL LIFTER PUMP	W9CBW3ZA	09N405M210	SWASS M2W 1NO	WASH FLOW BX
SHWFS	SWITCH-WASH WATER FL LIFTER PUMP	W9CBW3ZE	09N405M210	SWASS M2W 1NO	WASH FLOW BX
SHX	SWITCH-EMPTY POCKET	W9CBW3LA	09N405M210	SWASS M2W 1NO	MENTOR CNSOLE
SHX	SWITCH-EMPTY POCKET	W9CBW3LF	09N405M210	SWASS M2W 1NO	MENTOR CNSOLE
SHX	SWITCH-EMPTY POCKET	W9CBW3LP	09N405M210	SWASS M2W 1NO	MENTOR CNSOLE
SHX	SWITCH-EMPTY POCKET	W9CBW3LPB	09N405M210	SWASS M2W 1NO	MENTOR CNSOLE
SHX	SWITCH-EMPTY POCKET	W9CBW3LP4D	09N405M210	SWASS M2W 1NO	MENTOR CNSOLE

COMPONENT PARTS LIST

COMPONENT NUMBER	FUNCTION OF THIS COMPONENT	WHERE TO FIND THIS COMPONENT	MILNOR P/N	DESCRIPTION	LOCATION
SHX	SWITCH-EMPTY POCKET	W9CBW3LPD	09N405M210	SWASS M2W 1NO	MENTOR CNSOLE
SK	**>>SWITCH-KEYLOCK**				
SKEST	SWITCH-TEST DRIVE	W9CBW3DA	09N127C	KEYSW SPST 7A120VAC SCREW TERM	MAIN CNTRL BOX
SKEST	SWITCH-TEST DRIVE	W9CBW3DC	09N127C	KEYSW SPST 7A120VAC SCREW TERM	MAIN CNTRL BOX
SKVA	TRANSFORMER-208V SUPPLY TO 120VAC	W9CBW3WA	09US030A52	XFMR 1PH 3KVA 208V-120V	MAIN CNTRL BOX
SKVA	TRANSFORMER-380-415V SUPPLY TO 120VAC	W9CBW3WA	09US030A82	XFMR 1PH 3KVA 380-415/220-110	MAIN CNTRL BOX
SKVA	TRANSFORMER-480V+ SUPPLY TO 120VAC	W9CBW3WA	09US030A96	XFMR 1PH 3KVA 240/480X120/240	MAIN CNTRL BOX
SKVA	TRANSFORMER-208V SUPPLY TO 120VAC	W9CBW3WAA	09US030A52	XFMR 1PH 3KVA 208V-120V	MAIN CNTRL BOX
SKVA	TRANSFORMER-380-415V SUPPLY TO 120VAC	W9CBW3WAA	09US030A82	XFMR 1PH 3KVA 380-415/220-110	MAIN CNTRL BOX
SKVA	TRANSFORMER-480V+ SUPPLY TO 120VAC	W9CBW3WAA	09US030A96	XFMR 1PH 3KVA 240/480X120/240	MAIN CNTRL BOX
SL	**>>SWITCH-LEVEL OPERATED**				
SLFHI	LEVEL SW-HIGH LEVEL IN FLUSH TANK	W9CBW3LA	09R014A	MINI-SW SPDT STAKON #V15G1C26	FLUSH TANK
SLFHI	LEVEL SW-HIGH LEVEL IN FLUSH TANK	W9CBW3LF	09R014A	MINI-SW SPDT STAKON #V15G1C26	FLUSH TANK
SLFHI	LEVEL SW-HIGH LEVEL IN FLUSH TANK	W9CBW3LP	09R014A	MINI-SW SPDT STAKON #V15G1C26	FLUSH TANK
SLFHI	LEVEL SW-HIGH LEVEL IN FLUSH TANK	W9CBW3LPB	09R014A	MINI-SW SPDT STAKON #V15G1C26	FLUSH TANK
SLFHI	LEVEL SW-HIGH LEVEL IN PULSE FLOW TANK	W9CBW3LP4D	09R014A	MINI-SW SPDT STAKON #V15G1C26	SIDE OF TANK
SLFHI	LEVEL SW-HIGH LEVEL IN PULSE FLOW TANK	W9CBW3LPD	09R014A	MINI-SW SPDT STAKON #V15G1C26	PULSEFLOW TNK
SLFHS	LEVEL SW-HIGH LEVEL IN FILTER TANK	W9CBW3ZB	09R014A	MINI-SW SPDT STAKON #V15G1C26	FILTER TANK
SLFHS	LEVEL SW-HIGH LEVEL IN FILTER TANK	W9CBW3ZG	09R014A	MINI-SW SPDT STAKON #V15G1C26	RINSE ZN TANK
SLFHS	LEVEL SW-HIGH LEVEL IN FILTER TANK	W9CBW3ZW	09R014A	MINI-SW SPDT STAKON #V15G1C26	RINSE ZN TANK
SLFLI	LEVEL SW-LOW LEVEL IN FLUSH TANK	W9CBW3LA	09R014A	MINI-SW SPDT STAKON #V15G1C26	FLUSH TANK
SLFLI	LEVEL SW-LOW LEVEL IN FLUSH TANK	W9CBW3LF	09R014A	MINI-SW SPDT STAKON #V15G1C26	FLUSH TANK
SLFLI	LEVEL SW-LOW LEVEL IN FLUSH TANK	W9CBW3LG	09R014A	MINI-SW SPDT STAKON #V15G1C26	FLUSH TANK
SLFLI	LEVEL SW-LOW LEVEL IN FLUSH TANK	W9CBW3LP	09R014A	MINI-SW SPDT STAKON #V15G1C26	FLUSH TANK
SLFLI	LEVEL SW-LOW LEVEL IN FLUSH TANK	W9CBW3LPB	09R014A	MINI-SW SPDT STAKON #V15G1C26	FLUSH TANK
SLFLI	LEVEL SW-LOW LEVEL IN PULSE FLOW TANK	W9CBW3LP4D	09R014A	MINI-SW SPDT STAKON #V15G1C26	SIDE OF TANK
SLFLI	LEVEL SW-LOW LEVEL IN PULSE FLOW TANK	W9CBW3LPD	09R014A	MINI-SW SPDT STAKON #V15G1C26	PULSEFLOW TNK
SLHA1	LEVEL SW-CLOSES WHEN LEVEL HIGH	W9CBW3ZH	09R014A	MINI-SW SPDT STAKON #V15G1C26	PWR TANK
SLLFS	LEVEL SW-LOW LEVEL FILTER TANK	W9CBW3ZB	09R014A	MINI-SW SPDT STAKON #V15G1C26	FILTER TANK
SLLFS	LEVEL SW-LOW LEVEL FILTER TANK	W9CBW3ZG	09R014A	MINI-SW SPDT STAKON #V15G1C26	RINSE ZN TANK
SLLFS	LEVEL SW-LOW LEVEL FILTER TANK	W9CBW3ZW	09R014A	MINI-SW SPDT STAKON #V15G1C26	RINSE ZN TANK
SLLH	LEVEL SW-HIGH LEVEL IN WASH WATER TK	W9CBW3ZA	09R014A	MINI-SW SPDT STAKON #V15G1C26	WASH FLOW BX
SLLH	LEVEL SW-HIGH LEVEL IN WASH WATER TK	W9CBW3ZE	09R014A	MINI-SW SPDT STAKON #V15G1C26	WASH FLOW BX

COMPONENT PARTS LIST

COMPONENT NUMBER	FUNCTION OF THIS COMPONENT	WHERE TO FIND THIS COMPONENT	MILNOR P/N	DESCRIPTION	LOCATION
SLLL	LEVEL SW-LOW LEVEL IN WASH WATER TK	W9CBW3ZA	09R014A	MINI-SW SPDT STAKON #V15G1C26	WASH FLOW BX
SLLL	LEVEL SW-LOW LEVEL IN WASH WATER TK	W9CBW3ZE	09R014A	MINI-SW SPDT STAKON #V15G1C26	WASH FLOW BX
SLLL3	LEVEL SW-HIGH LEVEL IN MODULE	W9CBW3JC	09R014A	MINI-SW SPDT STAKON #V15G1C26	SIDE OF MODULE
SLLLL	LEVEL SW-LOW LEVEL IN MODULE	W9CBW3JC	09R014A	MINI-SW SPDT STAKON #V15G1C26	SIDE OF MODULE
SLLLL	LEVEL SW-LOW LEVEL IN MODULE	W9CBW3LG	09R014A	MINI-SW SPDT STAKON #V15G1C26	SIDE OF MODULE
SLLOW	LEVEL SW-CLOSES WHEN LEVEL BELOW LOW	W9CBW3ZH	09R014A	MINI-SW SPDT STAKON #V15G1C26	PWR TANK
SLSL	LEVEL SWITCH SAFETY LEVEL IN PFT TANK	W9CBW3LP1	09RL001	LIQUID LEVEL SW. SIDE MOUNT	PULSEFLOW TNK
SLSL	LEVEL SWITCH SAFETY LEVEL IN PFT TANK	W9CBW3LP1D	09RL001	LIQUID LEVEL SW. SIDE MOUNT	MAIN CNTRL BOX
SLSL	LEVEL SWITCH SAFETY LEVEL IN PFT TANK	W9CBW3LP2D	09RL001	LIQUID LEVEL SW. SIDE MOUNT	MAIN CNTRL BOX
SLSLR	LEVEL SW-LOW LEVEL IN REUSE SIDE	W9CBW3LP2D	09RL001	LIQUID LEVEL SW. SIDE MOUNT	MAIN CNTRL BOX
SLSLT	LEVEL SW-LEVEL OK IN REUSE SIDE	W9CBW3LP1D	09RL001	LIQUID LEVEL SW. SIDE MOUNT	PULSEFLOW TNK
SLSLT	LEVEL SW-LEVEL OK IN REUSE SIDE	W9CBW3LP2D	09RL001	LIQUID LEVEL SW. SIDE MOUNT	MAIN CNTRL BOX
SLTH1	LEVEL SW-HIGH LEVEL IN FILL TANK	W9CBW3FT	09R014A	MINI-SW SPDT STAKON #V15G1C26	FILL TANK
SLTL1	LEVEL SW-LOW LEVEL IN FILL TANK	W9CBW3FT	09R014A	MINI-SW SPDT STAKON #V15G1C26	FILL TANK
SM	**>>SWITCH-MECHANICAL OPERATED**				
SMPD1	SWITCH-AUTOMATIC LOAD BELT STOP 1	W9CBW3LB	09RLS002	MICROSW 1-NO/NC MOMENTARY	CONLO/WA
SMPD1	SWITCH-AUTOMATIC LOAD BELT STOP 1	W9CBW3LBB	09RLS002	MICROSW 1-NO/NC MOMENTARY	CONLO/WA
SMPD1	SWITCH-AUTOMATIC LOAD BELT STOP 1	W9CBW3LBA	09RLS002	MICROSW 1-NO/NC MOMENTARY	CONLO/WA
SMPD2	SWITCH-AUTOMATIC LOAD BELT STOP 2	W9CBW3LB	09RLS002	MICROSW 1-NO/NC MOMENTARY	CONLO/WA
SMPD2	SWITCH-AUTOMATIC LOAD BELT STOP 2	W9CBW3LBB	09RLS002	MICROSW 1-NO/NC MOMENTARY	CONLO/WA
SMPD2	SWITCH-AUTOMATIC LOAD BELT STOP 2	W9CBW3LBA	09RLS002	MICROSW 1-NO/NC MOMENTARY	CONLO/WA
SMSD	SWITCH-SHAKER SCREENACCESS DOOR INTER	W9CBW3SC	MESSAGE SW	FURNISHED WITH SHAKER	SKR SCREEN BX
SMSOL	SWITCH-EMERGENCY STOP CABLE LEFT	W9CBW3LB	09RLS002	MICROSW 1-NO/NC MOMENTARY	SIDE OF BELT
SMSOL	SWITCH-EMERGENCY STOP CABLE LEFT	W9CBW3LBB	09RLS002	MICROSW 1-NO/NC MOMENTARY	SIDE OF BELT
SMSOL	SWITCH-EMERGENCY STOP CABLE LEFT	W9CBW3LBA	09RLS002	MICROSW 1-NO/NC MOMENTARY	SIDE OF BELT
SMSOL	SWITCH-EMERGENCY STOP CABLE LEFT	W9CBW3SD	09RS0002	PULL-WIRE SW SCHMERSAL#ZQ 700-11	SIDE OF BELT
SMSOR	SWITCH-EMERGENCY STOP CABLE RIGHT	W9CBW3LB	09RLS002	MICROSW 1-NO/NC MOMENTARY	SIDE OF BELT
SMSOR	SWITCH-EMERGENCY STOP CABLE RIGHT	W9CBW3LBB	09RLS002	MICROSW 1-NO/NC MOMENTARY	SIDE OF BELT
SMSOR	SWITCH-EMERGENCY STOP CABLE RIGHT	W9CBW3LBA	09RLS002	MICROSW 1-NO/NC MOMENTARY	SIDE OF BELT
SMSOR	SWITCH-EMERGENCY STOP CABLE RIGHT	W9CBW3SD	09RS0002	PULL-WIRE SW SCHMERSAL#ZQ 700-11	SIDE OF BELT
SN	**>>SNUBBER**				
SN*	SNUBBER-BOARD	W9CBW3JB	08BNCMBT	COIN MACHINE SNUBBER->TESTED	MAIN CNTRL BOX
SN*	SNUBBER-BOARD	W9CBW3JD	08BNCMBT	COIN MACHINE SNUBBER->TESTED	MAIN CNTRL BOX

COMPONENT PARTS LIST

COMPONENT NUMBER	FUNCTION OF THIS COMPONENT	WHERE TO FIND THIS COMPONENT	MILNOR P/N	DESCRIPTION	LOCATION
SN*	SNUBBER-BOARD	W9CBW3SA	08BNCMBT	COIN MACHINE SNUBBER->TESTED	MAIN CNTRL BOX
SNAE	SNUBBER-CCW DIRECTION	W9CBW3DA	09ARC2047J	SNUB .2MFD 470 OHM 600VDC	MAIN CNTRL BOX
SNBE	SNUBBER-CW DIRECTION	W9CBW3DA	09ARC2047J	SNUB .2MFD 470 OHM 600VDC	MAIN CNTRL BOX
SNEFI	SNUBBER-PFT DRAIN VALVE	W9CBW3JE	09ARC2047J	SNUB .2MFD 470 OHM 600VDC	MAIN CNTRL BOX
SNFTPH	SNUBBER-FLUSH PH PROBES VALVE	W9CBW3JE	09ARC2047J	SNUB .2MFD 470 OHM 600VDC	MAIN CNTRL BOX
SNSTED	SNUBBER-DIRTY/CLEAN PFT VALVE	W9CBW3LP1D	09ARC2047J	SNUB .2MFD 470 OHM 600VDC	MAIN CNTRL BOX
SNSTED	SNUBBER-DIRTY/CLEAN PFT VALVE	W9CBW3LP2D	09ARC2047J	SNUB .2MFD 470 OHM 600VDC	MAIN CNTRL BOX
SNXY	SNUBBER-LDI VALVE TO DRAIN	W9CBW3JE	09ARC2047J	SNUB .2MFD 470 OHM 600VDC	MAIN CNTRL BOX
SP	**>>SWITCH-PRESSURE OPERATED**				
SPHZR	PRESSURE SW-POWER SW AIR SWITCH	W9CBW3ZH	09N082B80	PRESSW NASON CLOSE @ 80 LB	PWR TANK BX
SPOL	PRESSURE SW-OIL	W9CBW3JC	09N082B10	PRESSW NASON CLOSE FALLING AT 9PSI	AIR VALVE BOX
SPST	PRESSURE SW-AIR PRESSURE OK	W9CBW3JC	09N082B80	PRESSW NASON CLOSE @ 80 LB	AIR VALVE BOX
SPWZP	PRESSURE SW-RINSE ZONE AIR LOW	W9CBW3ZA	09N082B10	PRESSW NASON CLOSE @ 10 LB.	WASH FLOW BX
SPWZP	PRESSURE SW-RINSE ZONE AIR LOW	W9CBW3ZB	09N082B10	PRESSW NASON CLOSE @ 10 LB.	RINSE ZN BOX
SPWZP	PRESSURE SW-RINSE ZONE AIR LOW	W9CBW3ZE	09N082B10	PRESSW NASON CLOSE @ 10 LB.	RINSE ZN BOX
SPWZP	PRESSURE SW-RINSE ZONE AIR LOW	W9CBW3ZG	09N082B10	PRESSW NASON CLOSE @ 10 LB.	RINSE ZN TANK
SPWZP	PRESSURE SW-RINSE ZONE AIR LOW	W9CBW3ZW	09N082B10	PRESSW NASON CLOSE @ 10 LB.	RINSE ZN BOX
ST	**>>SWITCH-TEMPERATURE OPERATED**				
STDB1	SWITCH-TEMPERATURE BRAKING RESISTOR	W9CBW3DA	30RA175T	THERMOSTAT OPENS AT 175F	MAIN CNTRL BOX
STDB2	SWITCH-TEMPERATURE BRAKING RESISTOR	W9CBW3DA	30RA175T	THERMOSTAT OPENS AT 175F	MAIN CNTRL BOX
T	**>>TEMPERATURE PROBE**				
TPFF	TEMPERATURE PROBE-OVERHEAD FILL	W9CBW3FT	30R0043PSA	TEMPERATURE PROBE ASSY=S/S	OH/DUAL PFT
TPFF1	TEMPERATURE PROBE-OVERHEAD FILL 1	W9CBW3FT	30R0043PSA	TEMPERATURE PROBE ASSY=S/S	OH/DUAL PFT
TPFF2	TEMPERATURE PROBE-OVERHEAD FILL 2	W9CBW3FT	30R0043PSA	TEMPERATURE PROBE ASSY=S/S	OH/DUAL PFT
TPFF3	TEMPERATURE PROBE-OVERHEAD FILL 3	W9CBW3FT	30R0043PSA	TEMPERATURE PROBE ASSY=S/S	OH/DUAL PFT
UP	**>>UNINTERRUPTED POWER SUPPLY**				
UPS1	UNINTERRUPTED POWER SUPPLY	W9CBW3NB	08PCUPS420	UPS-BACKUP 420VA UPS EXTERNAL	MENTOR CNSOLE
UPS1	UNINTERRUPTED POWER SUPPLY	W9CBW3NBA	MESSAGE EW	SEE ESPC	MENTOR CNSOLE
UPS1	UNINTERRUPTED POWER SUPPLY	W9CBW3NBB	MESSAGE EW	SEE ESPC	MENTOR CNSOLE
UPS1	UNINTERRUPTED POWER SUPPLY	W9CBW3NBC	MESSAGE EW	SEE ESPC	MNTR CNTR PN
VE	**>>VALVE-ELECTRIC OPERATED**				
VE2W	VALVE-WASH LIFTER BYPASS FLOW	W9CBW3ZA	AVA030224	1/8"NC24V ASCO AIRVAL+MTG HWD	WASH FLOW BX
VE2W	VALVE-WASH LIFTER BYPASS FLOW	W9CBW3ZE	AVA030224	1/8"NC24V ASCO AIRVAL+MTG HWD	WASH FLOW BX

COMPONENT PARTS LIST

COMPONENT NUMBER	FUNCTION OF THIS COMPONENT	WHERE TO FIND THIS COMPONENT	MILNOR P/N	DESCRIPTION	LOCATION
VEALT	VALVE-ALTERNATE WATER SOURCE	W9CBW3FN	96R301B37	1/8"AIRPILOT 3W NC 120V50/60	AIR VALVE BOX
VEALT	VALVE-ALTERNATE WATER SOURCE	W9CBW3FNA	96R301B37	1/8"AIRPILOT 3W NC 120V50/60	AIR VALVE BOX
VEALT	VALVE-ALTERNATE WATER SOURCE	W9CBW3ZD	96R301B37	1/8"AIRPILOT 3W NC 120V50/60	RINSE ZN BOX
VEC#	VALVE-INJECT CHEM SUPPLY #	W9CBW3CA	MESSAGE EW	SUPPLIED BY CHEMICAL SUPPLIER	BY SUPPLIER
VEC#P	VALVE-SUPPLY MANIFOLD PURGE	W9CBW3CA	MESSAGE EW	SUPPLIED BY CHEMICAL SUPPLIER	BY SUPPLIER
VEC1	VALVE-INJECT CHEM SUPPLY 1	W9CBW3CA	MESSAGE EW	SUPPLIED BY CHEMICAL SUPPLIER	BY SUPPLIER
VECT	VALVE-COLD WATER PILOT	W9CBW3FT	96R301B37	1/8"AIRPILOT 3W NC 120V50/60	AIR VALVE BOX
VEDRT	VALVE-DRAIN FILL TANK	W9CBW3FT	96R301B37	1/8"AIRPILOT 3W NC 120V50/60	AIR VALVE BOX
VEEF	VALVE-ENABLE FLUSH WATER TO REUSE	W9CBW3RA	96R301B37	1/8"AIRPILOT 3W NC 120V50/60	AIR VALVE BOX
VEEFI	VALVE-PULSE FLOW TANK DRAIN N/C	W9CBW3JE	96R301B37	1/8"AIRPILOT 3W NC 120V50/60	AIR VALVE BOX
VEEP11	VALVE-FLOW STOP	W9CBW3LP3	96R301B37	1/8"AIRPILOT 3W NC 120V50/60	AIR VALVE BOX
VEEP11	VALVE-FLOW STOP	W9CBW3LP3D	96R301B37	1/8"AIRPILOT 3W NC 120V50/60	AIR VALVE BOX
VEEP12	VALVE-INDEPENDENT FLOW STOP MOD. 1 & 2	W9CBW3LP3	96R301B37	1/8"AIRPILOT 3W NC 120V50/60	AIR VALVE BOX
VEEP12	VALVE-INDEPENDENT FLOW STOP MOD. 1 & 2	W9CBW3LP3D	96R301B37	1/8"AIRPILOT 3W NC 120V50/60	AIR VALVE BOX
VEERT	VALVE-ENABLE REUSE TANK	W9CBW3LG	96R301B37	1/8"AIRPILOT 3W NC 120V50/60	AIR VALVE BOX
VEF1	VALVE-MODULE 1 VALVE INLET	W9CBW3LA	AVA030237	1/8"NC120VASCO AIRVAL+MTG HWD	AIR VALVE BOX
VEF1	VALVE-MODULE 1 VALVE INLET	W9CBW3LF	AVA030237	1/8"NC120VASCO AIRVAL+MTG HWD	AIR VALVE BOX
VEF1	VALVE-MODULE 1 VALVE INLET	W9CBW3LP	AVA030237	1/8"NC120VASCO AIRVAL+MTG HWD	AIR VALVE BOX
VEF1	VALVE-MODULE 1 VALVE INLET	W9CBW3LPB	AVA030237	1/8"NC120VASCO AIRVAL+MTG HWD	AIR VALVE BOX
VEF1	VALVE-MODULE 1 VALVE INLET	W9CBW3LP4D	AVA030237	1/8"NC120VASCO AIRVAL+MTG HWD	AIR VALVE BOX
VEF1	VALVE-MODULE 1 VALVE INLET	W9CBW3LPD	AVA030237	1/8"NC120VASCO AIRVAL+MTG HWD	AIR VALVE BOX
VEFD	VALVE-DRAIN FLOW SPLITTER	W9CBW3ZD	96R301B37	1/8"AIRPILOT 3W NC 120V50/60	RINSE ZN BOX
VEFF	VALVE-FAST FILL	W9CBW3JC	96R301B37	1/8"AIRPILOT 3W NC 120V50/60	AIR VALVE BOX
VEFF1	VALVE-FAST FILL MODULE 1	W9CBW3LPA1	96R301B37	1/8"AIRPILOT 3W NC 120V50/60	AIR VALVE BOX
VEFF10	VALVE-FAST FILL MODULE 10	W9CBW3LPA2	96R301B37	1/8"AIRPILOT 3W NC 120V50/60	AIR VALVE BOX
VEFF2	VALVE-FAST FILL MODULE 2	W9CBW3LPA1	96R301B37	1/8"AIRPILOT 3W NC 120V50/60	AIR VALVE BOX
VEFF3	VALVE-FAST FILL MODULE 3	W9CBW3LPA1	96R301B37	1/8"AIRPILOT 3W NC 120V50/60	AIR VALVE BOX
VEFF4	VALVE-FAST FILL MODULE 4	W9CBW3LPA1	96R301B37	1/8"AIRPILOT 3W NC 120V50/60	AIR VALVE BOX
VEFF5	VALVE-FAST FILL MODULE 5	W9CBW3LPA1	96R301B37	1/8"AIRPILOT 3W NC 120V50/60	AIR VALVE BOX
VEFF6	VALVE-FAST FILL MODULE 6	W9CBW3LPA1	96R301B37	1/8"AIRPILOT 3W NC 120V50/60	AIR VALVE BOX
VEFF7	VALVE-FAST FILL MODULE 7	W9CBW3LPA1	96R301B37	1/8"AIRPILOT 3W NC 120V50/60	AIR VALVE BOX
VEFF8	VALVE-FAST FILL MODULE 8	W9CBW3LPA1	96R301B37	1/8"AIRPILOT 3W NC 120V50/60	AIR VALVE BOX
VEFF9	VALVE-FAST FILL MODULE 9	W9CBW3LPA2	96R301B37	1/8"AIRPILOT 3W NC 120V50/60	AIR VALVE BOX

COMPONENT PARTS LIST

COMPONENT NUMBER	FUNCTION OF THIS COMPONENT	WHERE TO FIND THIS COMPONENT	MILNOR P/N	DESCRIPTION	LOCATION
VEFL	VALVE-FLUSH AND FAST FILL	W9CBW3JC	96R301B37	1/8"AIRPILOT 3W NC 120V50/60	AIR VALVE BOX
VEFL	VALVE-MOVE LEFT	W9CBW3ZJ	96R302B37	1/8"AIRPILOT 3W NO 120V50/60	FLOW SPLIT BOX
VEFLZ	VALVE-FAST FILL LAST MODULE	W9CBW3LP2D	AVA030237	1/8"NC120VASCO AIRVAL+MTG HWD	MAIN CNTRL BOX
VEFN	VALVE-FLOW NOT (NC)	W9CBW3FB	96R301B37	1/8"AIRPILOT 3W NC 120V50/60	AIR VALVE BOX
VEFN	VALVE-FLOW NOT (NC)	W9CBW3FN	96R301B37	1/8"AIRPILOT 3W NC 120V50/60	AIR VALVE BOX
VEFN	VALVE-FLOW NOT (NC)	W9CBW3FNA	96R301B37	1/8"AIRPILOT 3W NC 120V50/60	AIR VALVE BOX
VEFN1	VALVE-FLOW NOT (NO)	W9CBW3FB	96R302B37	1/8"AIRPILOT 3W NO 120V50/60	AIR VALVE BOX
VEFN1	VALVE-FLOW NOT (NO)	W9CBW3FN	96R302B37	1/8"AIRPILOT 3W NO 120V50/60	AIR VALVE BOX
VEFN1	VALVE-FLOW NOT (NO)	W9CBW3FNA	96R302B37	1/8"AIRPILOT 3W NO 120V50/60	AIR VALVE BOX
VEFR	VALVE-MOVE RIGH	W9CBW3ZJ	96R301B37	1/8"AIRPILOT 3W NC 120V50/60	FLOW SPLIT BOX
VEFT	VALVE-FLUSH TANK WATER INLET	W9CBW3LA	AVA030237	1/8"NC120VASCO AIRVAL+MTG HWD	AIR VALVE BOX
VEFT	VALVE-FLUSH TANK WATER INLET	W9CBW3LF	AVA030237	1/8"NC120VASCO AIRVAL+MTG HWD	AIR VALVE BOX
VEFT	VALVE-FAST FILL PFT TANK	W9CBW3LP	AVA030237	1/8"NC120VASCO AIRVAL+MTG HWD	AIR VALVE BOX
VEFT	VALVE-FAST FILL PFT TANK	W9CBW3LPB	AVA030237	1/8"NC120VASCO AIRVAL+MTG HWD	AIR VALVE BOX
VEFT	VALVE-FAST FILL PFT TANK	W9CBW3LP4D	AVA030237	1/8"NC120VASCO AIRVAL+MTG HWD	AIR VALVE BOX
VEFT	VALVE-FAST FILL PFT TANK	W9CBW3LPD	AVA030237	1/8"NC120VASCO AIRVAL+MTG HWD	AIR VALVE BOX
VEFT	VALVE-FAST FILL PFT TANK	W9CBW3ZH	AVA030237	1/8"NC120VASCO AIRVAL+MTG HWD	PWR TANK BX
VEFTPH	VALVE-FLUSH PH PROBE	W9CBW3JE	96R301B37	1/8"AIRPILOT 3W NC 120V50/60	AIR VALVE BOX
VEFW	VALVE-FRESH WATER	W9CBW3JH	96R301B37	1/8"AIRPILOT 3W NC 120V50/60	MAIN CNTRL BOX
VEHT	VALVE-HOT WATER PILOT	W9CBW3FT	96R301B37	1/8"AIRPILOT 3W NC 120V50/60	AIR VALVE BOX
VEMF	VALVE-MAIN WATER FLOW	W9CBW3FC	96R301B37	1/8"AIRPILOT 3W NC 120V50/60	AIR VALVE BOX
VEMPFG	VALVE-ENABLE PUMP FLOW	W9CBW3LP2	96R301B37	1/8"AIRPILOT 3W NC 120V50/60	MAIN CNTRL BOX
VEMPFG	VALVE-ENABLE PUMP FLOW	W9CBW3LP4	96R301B37	1/8"AIRPILOT 3W NC 120V50/60	AIR VALVE BOX
VEMPFH	VALVE-ENABLE ALT. PULSE FLOW C-BIT	W9CBW3LPA	96R301B37	1/8"AIRPILOT 3W NC 120V50/60	AIR VALVE BOX
VEMWV1	VALVE-MODULATING WATER FLOW	W9CBW3SK	96D086MESS	MODULAT ANGBOD 1.25"N/C H2O SS	WATER LINE
VEMWV2	VALVE-MODULATING WATER FLOW	W9CBW3SK	96D086MESS	MODULAT ANGBOD 1.25"N/C H2O SS	WATER LINE
VENPF	VALVE-ENABLE FIRST MODULE	W9CBW3LG	AVA030237	1/8"NC120VASCO AIRVAL+MTG HWD	AIR VALVE BOX
VEO1	VALVE-OILER	W9CBW3SA	96TDC2AA37	1/2" N/C 2WAY 120V50/60C VALVE	FRONT OF MACH
VEP	VALVE-MODULE PUMP	W9CBW3SC	96R301B37	1/8"AIRPILOT 3W NC 120V50/60	SKR SCREEN BX
VEPD	VALVE-PANELS DOWN N/O	W9CBW3LH	96R302B37	1/8"AIRPILOT 3W NO 120V50/60	AIR VALVE BOX
VEPF	VALVE-FLUSH PUMP WATER SEAL	W9CBW3LA	See Description	ASCO 8263-G200 3/8" S/S SOLENOID VLV	AIR VALVE BOX
VEPF	VALVE-FLUSH PUMP WATER SEAL	W9CBW3LF	See Description	ASCO 8263-G200 3/8" S/S SOLENOID VLV	AIR VALVE BOX
VEPU	VALVE-PANELS UP N/C	W9CBW3LH	96R301B37	1/8"AIRPILOT 3W NC 120V50/60	AIR VALVE BOX

COMPONENT PARTS LIST

COMPONENT NUMBER	FUNCTION OF THIS COMPONENT	WHERE TO FIND THIS COMPONENT	MILNOR P/N	DESCRIPTION	LOCATION
VERD	VALVE-PULSE FLOW TANK DRAIN N/O	W9CBW3JE	96R302B37	1/8"AIRPILOT 3W NO 120V50/60	AIR VALVE BOX
VERD	VALVE-REUSE TANK TO DRAIN N/O	W9CBW3RA	96R302B37	1/8"AIRPILOT 3W NO 120V50/60	AIR VALVE BOX
VESB2	VALVE-ENABLE FLOW IN 2ND TO LAST	W9CBW3FB	96R301B37	1/8"AIRPILOT 3W NC 120V50/60	AIR VALVE BOX
VESBL	VALVE-DISABLE FLOW IN LAST MODULE	W9CBW3FB	96R301B37	1/8"AIRPILOT 3W NC 120V50/60	AIR VALVE BOX
VESTED	VALVE-SWITCH TANKS FROM DIRTY TO CLEAN	W9CBW3LP1D	AVA030237	1/8"NC120VASCO AIRVAL+MTG HWD	MAIN CNTRL BOX
VESTED	VALVE-SWITCH TANKS FROM DIRTY TO CLEAN	W9CBW3LP2D	AVA030237	1/8"NC120VASCO AIRVAL+MTG HWD	MAIN CNTRL BOX
VESTT	VALVE-STEAM PILOT	W9CBW3FT	96R301B37	1/8"AIRPILOT 3W NC 120V50/60	AIR VALVE BOX
VETF	VALVE-TRICKLE FLOW	W9CBW3RA	96R301B37	1/8"AIRPILOT 3W NC 120V50/60	AIR VALVE BOX
VEWFS	VALVE-PUMP DISCHARGE OPEN	W9CBW3ZA	AVA030237	1/8"NC120VASCO AIRVAL+MTG HWD	WASH FLOW BX
VEWFS	VALVE-PUMP DISCHARGE OPEN	W9CBW3ZE	AVA030237	1/8"NC120VASCO AIRVAL+MTG HWD	WASH FLOW BX
VEWFW	VALVE-LIFTER PUMP WATER SEAL	W9CBW3ZA	See Description	ASCO 8263-G200 3/8" S/S SOLENOID VLV	AT PUMP
VEWFW	VALVE-LIFTER PUMP WATER SEAL	W9CBW3ZE	See Description	ASCO 8263-G200 3/8" S/S SOLENOID VLV	AT PUMP
VEWZP	VALVE-PUMP DISCHARGE OPEN	W9CBW3ZB	AVA030237	1/8"NC120VASCO AIRVAL+MTG HWD	RINSE ZN BOX
VEWZP	VALVE-PUMP DISCHARGE OPEN	W9CBW3ZG	AVA030237	1/8"NC120VASCO AIRVAL+MTG HWD	RINSE ZN TANK
VEWZP	VALVE-PUMP DISCHARGE OPEN	W9CBW3ZW	AVA030237	1/8"NC120VASCO AIRVAL+MTG HWD	RINSE ZN BOX
VEWZR	VALVE-SURPLUS PUMP WATER SEAL	W9CBW3ZB	See Description	ASCO 8263-G200 3/8" S/S SOLENOID VLV	AT PUMP
VEWZR	VALVE-SURPLUS PUMP WATER SEAL	W9CBW3ZF	See Description	ASCO 8263-G200 3/8" S/S SOLENOID VLV	AT PUMP
VEWZR	VALVE-SURPLUS PUMP WATER SEAL	W9CBW3ZG	See Description	ASCO 8263-G200 3/8" S/S SOLENOID VLV	AT PUMP
VEWZR	VALVE-SURPLUS PUMP WATER SEAL	W9CBW3ZW	See Description	ASCO 8263-G200 3/8" S/S SOLENOID VLV	AT PUMP
VEWZS	VALVE-RINSE ZONE PUMP WATER SEAL	W9CBW3ZB	See Description	ASCO 8263-G200 3/8" S/S SOLENOID VLV	AT PUMP
VEWZS	VALVE-RINSE ZONE PUMP WATER SEAL	W9CBW3ZG	See Description	ASCO 8263-G200 3/8" S/S SOLENOID VLV	AT PUMP
VEWZS	VALVE-RINSE ZONE PUMP WATER SEAL	W9CBW3ZW	See Description	ASCO 8263-G200 3/8" S/S SOLENOID VLV	AT PUMP
VEX	VALVE-SWITCH FROM HOT WATER TO PFT	W9CBW3LPA2	96R301B37	1/8"AIRPILOT 3W NC 120V50/60	AIR VALVE BOX
VEXY	VALVE PUMP TO SEWER	W9CBW3FA	96R301B37	1/8"AIRPILOT 3W NC 120V50/60	AIR VALVE BOX
VEXY	VALVE PUMP TO SEWER	W9CBW3FAA	96R301B37	1/8"AIRPILOT 3W NC 120V50/60	AIR VALVE BOX
VEXY	VALVE-LDI SEND TO DRAIN	W9CBW3JE	96R301B37	1/8"AIRPILOT 3W NC 120V50/60	AIR VALVE BOX
VEXYZ	VALVE-LIFTER PUMP WATER SEAL	W9CBW3LG	AVA030237	1/8"NC120VASCO AIRVAL+MTG HWD	AIR VALVE BOX
VEY	VALVE-SWITCH FROM TEMPERED WATER TO PF	W9CBW3LPA2	96R301B37	1/8"AIRPILOT 3W NC 120V50/60	AIR VALVE BOX
WF	**>>METER-WATER**				
WFM-*	METER-WATER FLOW	W9CBW3JA	30F515	FLOW SENSOR SIGNET P51530-P0	WATER INLET
WFMG1	METER-MAGNETIC FLOW	W9CBW3SK	30F580	8041 BLIND UNIT MAG SENSOR	WATER LINE
WFMG1*	METER-TRANSMITTER FOR MAGNETIC FLOW	W9CBW3SK	30F566	MAGMETER INSERT TRANS TYPE804	WATER LINE
WFMG17	METER-MODULE TO MODULE	W9CBW3LP4	30F515	FLOW SENSOR SIGNET P51530-P0	PUMP DISCHARGE

COMPONENT PARTS LIST

COMPONENT NUMBER	FUNCTION OF THIS COMPONENT	WHERE TO FIND THIS COMPONENT	MILNOR P/N	DESCRIPTION	LOCATION
WFMG18	METER-FLOW TO LAST MODULE	W9CBW3LP3	30F515	FLOW SENSOR SIGNET P51530-P0	LAST MOD INLET
WFMG18	METER-WATER FLOW	W9CBW3LP3D	30F515	FLOW SENSOR SIGNET P51530-P0	LAST MOD INLET
WFMG2	METER-MAGNETIC FLOW	W9CBW3SK	30F580	8041 BLIND UNIT MAG SENSOR	WATER LINE
WFMG2*	METER-TRANSMITTER FOR MAGNETIC FLOW	W9CBW3SK	30F566	MAGMETER INSERT TRANS TYPE804	WATER LINE
ZF	**>>RECTIFIER**				
ZFWA	RECTIFIER-WEIGHT IS HIGH	W9CBW3LC	09A020EBR	RECTIFIER (EBR) 15A/600PIV	CONLO/WA BOX
ZFWL	RECTIFIER-WEIGHT IS LOW	W9CBW3LC	09A020EBR	RECTIFIER (EBR) 15A/600PIV	CONLO/WA BOX
ZFWO	RECTIFIER-WEIGHT IS O.K.	W9CBW3LC	09A020EBR	RECTIFIER (EBR) 15A/600PIV	CONLO/WA BOX
ZFWT	RECTIFIER-CONWA IS TARING	W9CBW3LC	09A020EBR	RECTIFIER (EBR) 15A/600PIV	CONLO/WA BOX
ZS	**>>LOAD CELL**				
ZSCW	LOAD CELL-CONWA	W9CBW3NB	30L2005	LOADCELL	BELOW CONWA
ZSCW	LOAD CELL-CONWA	W9CBW3NBA	30L2005	LOADCELL	BELOW CONWA
ZSCW	LOAD CELL-CONWA	W9CBW3NBB	30L2005	LOADCELL	BELOW CONWA
ZSCW1	LOAD CELL #1	W9CBW3NB	30L2005	LOADCELL	BELOW CONWA
ZSCW1	LOAD CELL #1	W9CBW3NBA	30L2005	LOADCELL	BELOW CONWA
ZSCW1	LOAD CELL #1	W9CBW3NBB	30L2005	LOADCELL	BELOW CONWA
ZSCW2	LOAD CELL #2	W9CBW3NB	30L2005	LOADCELL	BELOW CONWA
ZSCW2	LOAD CELL #2	W9CBW3NBA	30L2005	LOADCELL	BELOW CONWA
ZSCW2	LOAD CELL #2	W9CBW3NBB	30L2005	LOADCELL	BELOW CONWA
SHPE1	SWITCH EMERGENCY PULL STRING	W9CBW3LI	09RS0002	PULL-WIRE SW SCHMERSAL#ZQ 700-11	SIDE OF BELT
SHPE2	SWITCH EMERGENCY PULL STRING	W9CBW3LI	09RS0002	PULL-WIRE SW SCHMERSAL#ZQ 700-11	SIDE OF BELT
SHMD	SWIJTCH MOTOR DISCONNECT	W9CBW3LI	09N042204	ROTARY DISCON 10A 600V 2POS 4P	INTRMEDT CNTL
CPPEF	PHOTOEYE INTERMEDIATE BELT	W9CBW3LI			
SKFR	SWITCH FORWARD/REVERSE INDIMEDIATE BLT	W9CBW3LI	09N127C	KEYSW SPST 7A120VAC SCREW TERM	INTRMEDT CNTL
CRF	SWITCH-FORWARD MANUAL OPERATION	W9CBW3LI	09C024D37	4PDT "KH"110/120V	INTRMEDT CNTL
CSRBF	CONTACTOR-MOVE INTERMEDIATE FORWARD	W9CBW3LI	MESSAGE EW	SEE CSCR FOR PART NUMBER	INTRMEDT CNTL
CSRBR	CONTACTOR-MOVE INTERMEDIATE REVERSE	W9CBW3LI	09MR08B337	* 12A 3P REV+2N/C 120V5/6 IEC	INTRMEDT CNTL
SHFR	SWITCH-INTERMEDIATE BELT FORW/REV	W9CBW3LI			INTRMEDT CNTL
ETB	OVERLOAD-INTERMEDIATE BELT MOTOR	W9CBW3LI	09FTD0016T	EI PLUS OL RELAY 1.0-5.0A	INTRMEDT CNTL
MTB	MOTOR- INTERMEDIATE BELT	W9CBW3LI			INTRMEDT BELT

PELLERIN MILNOR CORPORATION
LIMITED STANDARD WARRANTY

We warrant to the original purchaser that MILNOR machines including electronic hardware/software (hereafter referred to as "equipment"), will be free from defects in material and workmanship for a period of one year from the date of shipment (unless the time period is specifically extended for certain parts pursuant to a specific MILNOR published extended warranty) from our factory with no operating hour limitation. This warranty is contingent upon the equipment being installed, operated and serviced as specified in the operating manual supplied with the equipment, and operated under normal conditions by competent operators.

Providing we receive written notification of a warranted defect within 30 days of its discovery, we will—at our option—repair or replace the defective part or parts, EX Factory (labor and freight specifically NOT included). We retain the right to require inspection of the parts claimed defective in our factory prior to repairing or replacing same. We will not be responsible, or in any way liable, for unauthorized repairs or service to our equipment, and this warranty shall be void if the equipment is tampered with, modified, or abused, used for purposes not intended in the design and construction of the machine, or is repaired or altered in any way without MILNOR's written consent.

Parts damaged by exposure to weather, to aggressive water, or to chemical attack are not covered by this warranty. For parts which require routine replacement due to normal wear—such as gaskets, contact points, brake and clutch linings, belts, hoses, and similar parts—the warranty time period is 90 days.

We reserve the right to make changes in the design and/or construction of our equipment (including purchased components) without obligation to change any equipment previously supplied.

ANY SALE OR FURNISHING OF ANY EQUIPMENT BY MILNOR IS MADE ONLY UPON THE EXPRESS UNDERSTANDING THAT MILNOR MAKES NO EXPRESSED OR IMPLIED WARRANTIES OF MERCHANTABILITY OR FITNESS FOR ANY PARTICULAR USE OR PURPOSE OR ANY OTHER WARRANTY IMPLIED BY LAW INCLUDING BUT NOT LIMITED TO REDHIBITION. MILNOR WILL NOT BE RESPONSIBLE FOR ANY COSTS OR DAMAGES ACTUALLY INCURRED OR REQUIRED AS A RESULT OF: THE FAILURE OF ANY OTHER PERSON OR ENTITY TO PERFORM ITS RESPONSIBILITIES, FIRE OR OTHER HAZARD, ACCIDENT, IMPROPER STORAGE, MIS-USE, NEGLECT, POWER OR ENVIRONMENTAL CONTROL MALFUNCTIONS, DAMAGE FROM LIQUIDS, OR ANY OTHER CAUSE BEYOND THE NORMAL RANGE OF USE. REGARDLESS OF HOW CAUSED, IN NO EVENT SHALL MILNOR BE LIABLE FOR SPECIAL, INDIRECT, PUNITIVE, LIQUIDATED, OR CONSEQUENTIAL COSTS OR DAMAGES, OR ANY COSTS OR DAMAGES WHATSOEVER WHICH EXCEED THE PRICE PAID TO MILNOR FOR THE EQUIPMENT IT SELLS OR FURNISHES.

THE PROVISIONS ON THIS PAGE REPRESENT THE ONLY WARRANTY FROM MILNOR AND NO OTHER WARRANTY OR CONDITIONS, STATUTORY OR OTHERWISE, SHALL BE IMPLIED.

WE NEITHER ASSUME, NOR AUTHORIZE ANY EMPLOYEE OR OTHER PERSON TO ASSUME FOR US, ANY OTHER RESPONSIBILITY AND/OR LIABILITY IN CONNECTION WITH THE SALE OR FURNISHING OF OUR EQUIPMENT TO ANY BUYER.

BMP720097/19036

BIUUUD19 (Published) Book specs- Dates: 20081231 / 20081231 / 20081231 Lang: ENG01 Applic: UUU

How to Get the Necessary Repair Components

This document uses Simplified Technical English.
Learn more at http://www.asd-ste100.org.

You can get components to repair your machine from the approved supplier where you got this machine. Your supplier will usually have the necessary components in stock. You can also get components from the Milnor® factory.

Tell the supplier the machine model and serial number and this data for each necessary component:

- The component number from this manual
- The component name if known
- The necessary quantity
- The necessary transportation requirements
- If the component is an electrical component, give the schematic number if known.
- If the component is a motor or an electrical control, give the nameplate data from the used component.

To write to the Milnor factory:

Pellerin Milnor Corporation
Post Office Box 400
Kenner, LA 70063-0400
UNITED STATES

Telephone: 504-467-2787
Fax: 504-469-9777
Email: parts@milnor.com

— End of BIUUUD19 —

BIUUUS27 (Published) Book specs- Dates: 20051111 / 20051111 / 20060323 Lang: ENG01 Applic: PCU

Safety—Continuous Batch Washer

1. General Safety Requirements—Vital Information for Management Personnel [Document BIUUUS04]

Incorrect installation, neglected preventive maintenance, abuse, and/or improper repairs, or changes to the machine can cause unsafe operation and personal injuries, such as multiple fractures, amputations, or death. The owner or his selected representative (owner/user) is responsible for understanding and ensuring the proper operation and maintenance of the machine. The owner/user must familiarize himself with the contents of all machine instruction manuals. The owner/user should direct any questions about these instructions to a Milnor® dealer or the Milnor® Service department.

Most regulatory authorities (including OSHA in the USA and CE in Europe) hold the owner/user ultimately responsible for maintaining a safe working environment. Therefore, the owner/user must do or ensure the following:

- recognize all foreseeable safety hazards within his facility and take actions to protect his personnel, equipment, and facility;
- work equipment is suitable, properly adapted, can be used without risks to health or safety, and is adequately maintained;
- where specific hazards are likely to be involved, access to the equipment is restricted to those employees given the task of using it;
- only specifically designated workers carry out repairs, modifications, maintenance, or servicing;
- information, instruction, and training is provided;
- workers and/or their representatives are consulted.

Work equipment must comply with the requirements listed below. The owner/user must verify that installation and maintenance of equipment is performed in such a way as to support these requirements:

- control devices must be visible, identifiable, and marked; be located outside dangerous zones; and not give rise to a hazard due to unintentional operation;
- control systems must be safe and breakdown/damage must not result in danger;
- work equipment is to be stabilized;
- protection against rupture or disintegration of work equipment;
- guarding, to prevent access to danger zones or to stop movements of dangerous parts before the danger zones are reached. Guards to be robust; not give rise to any additional hazards; not be easily removed or rendered inoperative; situated at a sufficient distance from the danger zone; not restrict view of operating cycle; allow fitting, replacing, or maintenance by restricting access to relevant area and without removal of guard/protection device;
- suitable lighting for working and maintenance areas;
- maintenance to be possible when work equipment is shut down. If not possible, then protection measures to be carried out outside danger zones;
- work equipment must be appropriate for preventing the risk of fire or overheating; discharges of gas, dust, liquid, vapor, other substances; explosion of the equipment or substances in it.

1.1. **Laundry Facility**—Provide a supporting floor that is strong and rigid enough to support–with a reasonable safety factor and without undue or objectionable deflection–the weight of the fully loaded machine and the forces transmitted by it during operation. Provide sufficient clearance for machine movement. Provide any safety guards, fences, restraints, devices, and verbal and/or posted restrictions necessary to prevent personnel, machines, or other moving machinery from accessing the machine or its path. Provide adequate ventilation to carry away heat and vapors. Ensure service connections to installed machines meet local and national safety standards, especially regarding the electrical disconnect (see the National Electric Code). Prominently post safety information, including signs showing the source of electrical disconnect.

1.2. **Personnel**—Inform personnel about hazard avoidance and the importance of care and common sense. Provide personnel with the safety and operating instructions that apply to them. Verify that personnel use proper safety and operating procedures. Verify that personnel understand and abide by the warnings on the machine and precautions in the instruction manuals.

1.3. **Safety Devices**—Ensure that no one eliminates or disables any safety device on the machine or in the facility. Do not allow machine to be used with any missing guard, cover, panel or door. Service any failing or malfunctioning device before operating the machine.

1.4. **Hazard Information**—Important information on hazards is provided on the machine safety placards, in the Safety Guide, and throughout the other machine manuals. **Placards must be kept clean so that the information is not obscured. They must be replaced immediately if lost or damaged. The Safety Guide and other machine manuals must be available at all times to the appropriate personnel.** See the machine service manual for safety placard part numbers. Contact the Milnor Parts department for replacement placards or manuals.

1.5. **Maintenance**—Ensure the machine is inspected and serviced in accordance with the norms of good practice and with the preventive maintenance schedule. Replace belts, pulleys, brake shoes/disks, clutch plates/tires, rollers, seals, alignment guides, etc. before they are severely worn. Immediately investigate any evidence of impending failure and make needed repairs (e.g., cylinder, shell, or frame cracks; drive components such as motors, gear boxes, bearings, etc., whining, grinding, smoking, or becoming abnormally hot; bending or cracking of cylinder, shell, frame, etc.; leaking seals, hoses, valves, etc.) Do not permit service or maintenance by unqualified personnel.

2. Safety Alert Messages—Internal Electrical and Mechanical Hazards [Document BIUUUS11]

The following are instructions about hazards inside the machine and in electrical enclosures.

WARNING 1: Electrocution and Electrical Burn Hazards—Contact with electric power can kill or seriously injure you. Electric power is present inside the cabinetry unless the main machine power disconnect is off.

- Do not unlock or open electric box doors.
- Do not remove guards, covers, or panels.
- Do not reach into the machine housing or frame.
- Keep yourself and others off of machine.
- Know the location of the main machine disconnect and use it in an emergency to remove all electric power from the machine.

WARNING 2: Entangle and Crush Hazards—Contact with moving components normally isolated by guards, covers, and panels, can entangle and crush your limbs. These components move automatically.

- Do not remove guards, covers, or panels.
- Do not reach into the machine housing or frame.
- Keep yourself and others off of machine.
- Know the location of all emergency stop switches, pull cords, and/or kick plates and use them in an emergency to stop machine motion. These may not stop certain devices such as pumps on some machines.

CAUTION 3: Burn Hazards—Contact with hot goods or machine components can burn you.

- Do not remove guards, covers, or panels.
- Do not reach into the machine housing or frame.

3. Safety Alert Messages—External Mechanical Hazards [Document BIUUUS12]

The following are instructions about hazards around the front, sides, rear or top of the machine.

4. Safety Alert Messages—Cylinder and Processing Hazards [Document BIUUUS13]

The following are instructions about hazards related to the cylinder and laundering process.

WARNING 4: Confined Space Hazards—Confinement in the cylinder can kill or injure you. Hazards include but are not limited to panic, burns, poisoning, suffocation, heat prostration, biological contamination, electrocution, and crushing.

- Do not attempt unauthorized servicing, repairs, or modification.

WARNING 5: Explosion and Fire Hazards—Flammable substances can explode or ignite in the cylinder, drain trough, or sewer. The machine is designed for washing with water, not any other solvent. Processing can cause solvent-containing goods to give off flammable vapors.

- Do not use flammable solvents in processing.
- Do not process goods containing flammable substances. Consult with your local fire department/public safety office and all insurance providers.

5. Safety Alert Messages—Unsafe Conditions [Document BIUUUS14]

5.1. Damage and Malfunction Hazards

5.1.1. Hazards Resulting from Inoperative Safety Devices

WARNING 6: Multiple Hazards—Operating the machine with an inoperative safety device can kill or injure personnel, damage or destroy the machine, damage property, and/or void the warranty.

- Do not tamper with or disable any safety device or operate the machine with a malfunctioning safety device. Request authorized service.

WARNING 7: Electrocution and Electrical Burn Hazards—Electric box doors—Operating the machine with any electric box door unlocked can expose high voltage conductors inside the box.

- Do not unlock or open electric box doors.

WARNING 8: Entangle and Crush Hazards—Guards, covers, and panels—Operating the machine with any guard, cover, or panel removed exposes moving components.

- Do not remove guards, covers, or panels.

5.1.2. Hazards Resulting from Damaged Mechanical Devices

WARNING 9: Multiple Hazards—Operating a damaged machine can kill or injure personnel, further damage or destroy the machine, damage property, and/or void the warranty.

- Do not operate a damaged or malfunctioning machine. Request authorized service.

CAUTION 10: Machine Damage Hazards—Drive shaft and drive motors—Although the tunnel may operate with drive shafts disconnected between modules or units, or with a motor not functioning, the added stress on drive components will quickly damage the machine.

- Do not operate the machine with any evidence of damage or malfunction.

5.2. Careless Use Hazards

5.2.1. Careless Operation Hazards—Vital Information for Operator Personnel (see also operator hazards throughout manual)

WARNING 11: Multiple Hazards—Careless operator actions can kill or injure personnel, damage or destroy the machine, damage property, and/or void the warranty.

- Do not tamper with or disable any safety device or operate the machine with a malfunctioning safety device. Request authorized service.
- Do not operate a damaged or malfunctioning machine. Request authorized service.
- Do not attempt unauthorized servicing, repairs, or modification.
- Do not use the machine in any manner contrary to the factory instructions.
- Use the machine only for its customary and intended purpose.
- Understand the consequences of operating manually.

CAUTION 12: Goods Damage and Wasted Resources—Entering incorrect cake data causes improper processing, routing, and accounting of batches.

- Understand the consequences of entering cake data.

5.2.2. Careless Servicing Hazards—Vital Information for Service Personnel (see also service hazards throughout manuals)

WARNING 13: Electrocution and Electrical Burn Hazards—Contact with electric power can kill or seriously injure you. Electric power is present inside the cabinetry unless the main machine power disconnect is off.

- Do not service the machine unless qualified and authorized. You must clearly understand the hazards and how to avoid them.
- Abide by the current OSHA lockout/tagout standard when lockout/tagout is called for in the service instructions. Outside the USA, abide by the OSHA standard in the absence of

any other overriding standard.

WARNING 14: Entangle and Crush Hazards—Contact with moving components normally isolated by guards, covers, and panels, can entangle and crush your limbs. These components move automatically.

- Do not service the machine unless qualified and authorized. You must clearly understand the hazards and how to avoid them.
- Abide by the current OSHA lockout/tagout standard when lockout/tagout is called for in the service instructions. Outside the USA, abide by the OSHA standard in the absence of any other overriding standard.

WARNING 15: Confined Space Hazards—Confinement in the cylinder can kill or injure you. Hazards include but are not limited to panic, burns, poisoning, suffocation, heat prostration, biological contamination, electrocution, and crushing.

- Do not enter the cylinder until it has been thoroughly purged, flushed, drained, cooled, and immobilized.
- Abide by the confined space entry procedures in the reference manual.

— End of BIUUUS27 —

CBW (Tunnel) to Press System Connections

Connections Between the CBW or Allied Tunnel and the Press (Non-Miltrac)

"Dry Code" Inputs—In the low voltage control box of the Press, you will see the tag identified as "Micro 6 Systems— Press—Customer's Connections". These connections are made to TBA located in the press low voltage control box. Dry Code information is as follows:

Dry Code A connects in TBA 99
Dry Code B connects in TBA 90
Dry Code C connects in TBA 91
Dry Code D connects in TBA 92

The Dry Codes are interpreted binary up to 16 different dry codes. Dry Code A is considered the least significant.

"Shuttle Is Here" Input—"Shuttle is Here" connects in TBA 87. This is only used when the Press is interfaced to an allied shuttle. When this input is made, it tells the Press that the Shuttle is in front of the Press and is at the loading height and is ready to accept a load.

"Low Pressure For Goods" Input— This input connects to TBA 96. The goods have just been dumped into the Pre-Press will receive low pressure under the main bell.

"Third Pressure For Goods" Input— This input connects in TBA 95. The goods that have been dumped into the Pre-Press will receive the third pressure under the main bell.

"Don't Main Press Goods" Input— This input connects to TBA 88. The goods that have just dumped into the Pre-Press will not be pressurized at all under the main bell.

"No Goods Transferred" Input— This input connects to TBA 94. When this input is made, it tells the Press that there were no goods transferred, thus the Pre-Press does not come down.

"New Customer", "New Formula", "New Goods" Input—"New Customer", "New Formula", "New Goods" connects to TBA 99. When this input is made, it tells the Press that the goods that have just transferred into the Pre-Press are a different customer, a different formula, or different goods from the previous load.

"Single Cake" Input— This input connects to TBA 93. When this input is made, it tells the Press that these goods must be delivered by themselves.

"Press Loaded" Input— Connects to TBA 97. When this input is made, it tells the Press that goods have just been transferred into the Pre-Press.

"Press Free Contact"— Connects between TBA 86 and TBA 101. This contact will close telling the allied machinery that the Press is ready to accept a new load.

"Press Desires To Unload" Contact— Connects between TBA 85 and TBA 100.

This is only used when there is an allied Shuttle. This contact closes when the Press is ready to unload goods.

Please note that the inputs conduct a ground potential. It is important that a 14 AWG ground connects the systems together.

Also, ground all spare wires between the Press and the Tunnel. Wires run between the Press and Tunnel must go through a ferrite bead.

Refer to schematic W6PR5SIMT for more information.

Connections Between MILTRAC and the Press

A shielded twisted pair must be run between the Press and MILNET/MILTRAC along with a 14 gauge ground. The ground must be secure between the Press ground lug in the low voltage control box and the ground lug in the MILNET/MILTRAC control box. The twisted pair is for serial communications. In the Press processor control box, connect the twisted pair to MTA32-1 and MTA32-3. Ground the shielded cable on this side only. In the MILNET/MILTRAC processor control box, connect the twisted pair on MTA32-2 and MTA32-4.

Special Load Interface Requirements for the Milnor® Centrifugal Extractor

Regardless of what device loads a Milnor centrifugal extractor or what type of system the extractor is in, communication between the extractor and the loading device requires one or more allied interface connections (see Note 1). This document explains how to establish these connections when:

- the centrifugal extractor is loaded by a Milnor CBW® or Milnor COBUC (wet goods shuttle) and both devices communicate with Miltrac™ (either the older Miltrac controller or PC Miltrac software running on a MultiTrac PC),
- the centrifugal extractor is loaded by a Milnor CBW controlled by a Mentor® or Mark 8 Miltron™ controller, but one or both of the devices **do not** communicate with Miltrac.

Unlikely and/or nonspecific loading devices (e.g., COBUC in a non-Miltrac system, CBW with non-serial controls, allied tunnel) are not covered in this document. For such conditions, consult with Milnor Technical Support.

Allied interface signals are referred to in this document by their common names only. Connection points (terminal and pin number) are not provided. See the allied interface signals tables for this information. These tables can be found both in manual MTPALI01 (see Note 1) and in the schematic manuals for the individual machines.

> **Note 1:** For a detailed explanation of allied interfaces, refer to manual MTPALR01 "Allied Interfaces for Milnor Automated Laundering System Machines (Mark 5 Controls and Later)."

1. When the Devices Communicate Via Miltrac

If the CBW or COBUC and the centrifugal extractor communicate with Miltrac, all batch data and most operational data are handled by the Miltrac controller. Only the **start cycle** allied input to the extractor need be used in addition. This signal ensures proper distribution by causing the extractor to begin the cycle, and hence, to go from loading speed to distribution speed, as soon as the goods transfer, and before too much water has drained out. This timing cannot be reliably achieved by Miltrac.

If the centrifugal extractor is loaded by a CBW, this extractor input must be triggered by a CBW programmable output, as explained in Section 2.6 "The Start Cycle Signal". If loaded by a Milnor COBUC, use the COBUC **finished unloading to Milnor** output to close the extractor input (see Note 2). The COBUC is used where two or more extraction devices receive batches from the same tunnel. Wire this COBUC output to each centrifugal extractor that receives goods from the COBUC. Only the extractor that is currently receiving from the COBUC will respond to this signal.

> **Note 2:** Two COBUC outputs perform similar functions: **finished unloading to Milnor** (TBC-1 and TBC-2) and **finished unloading** (WCO-03 and WCO-04). The first is specifically for the Milnor centrifugal extractor and closes when the bucket, tilting up to dump the goods, reaches its upper limit. The second is for use by any other allied device.

2. When Devices Do Not Communicate Via Miltrac

If the CBW or the centrifugal extractor or both **do not** communicate with Miltrac, all communication between the CBW and the centrifugal extractor is via an allied interface. This requires that data passing is enabled on the Mentor or Miltron controller (Section 2.1). Batch data passed from the CBW to the extractor includes the **extract code** (Section 2.3), the **empty load** signal (Section 2.4), and may include other batch data, if available (Section 2.2). Operational signals from the CBW to the extractor include the optional **end extract (early call)** signal and the

required **start extractor** signal (Section 2.5), and the **start cycle** signal (Section 2.6). Additionally, the extractor must pass a **extractor says load allowed** signal to the CBW (Section 2.7).

2.1. Enabling Allied Data Pass—Whether the CBW is Miltron- or Mentor-controlled, allied data pass must be enabled and the module that supplies the batch data must be specified. On the Miltron, allied data pass is enabled in *Display N, Data Pass*. On the Mentor, it is enabled in *Data Pass* on the *CBW Hardware Configuration* page. The last module of the CBW supplies batch data to the extractor. The number that identifies this module is one less than the number of modules (for example, the last module on a 10 module CBW is module 9) because for this purpose, counting starts at zero (the first module is module 0). On the Miltron, enter this value in *Display H, Page 01*, in the *NCPOS* field. On the Mentor, enter it on the *CBW Output Timers* page, in the *Module Supplying Batch Data* field.

2.2. Batch Data—Applicable CBWs can provide, via allied signals, and the centrifugal extractor can read in: 16 dry codes, 256 customer codes, and the following signals: new formula, new customer, and single cake. The extractor can also read in 128 goods codes and 16 destination codes, but the CBW can only provide 8 destination codes. Refer to manual MTPALR01 (see Note 1) or the machine schematic manuals for connection points for these signals.

The extractor can be programmed for 16 discrete extract codes. Some, but not all applicable CBWs provide these. However, a work-around is available to handle extract codes, as explained in Section 2.3, below. The extractor can also read in an empty load signal. This must be handled as explained in Section 2.4, below.

2.3. Using Drycode for Extract Code on Certain CBW's—Some CBWs explicitly provide 16 extract code output signals. The following CBW controllers **do not**:

- Miltron controller with a software version 9401C or earlier
- Mentor controller with Generation2 (G2) Mentor software version 97107 or earlier
- Mentor controller with any Generation3 (G3) Mentor software version

On CBW's with any of the controllers listed above, the four output signals for drycode must be used instead for the extract code. If the CBW is Miltron-controlled, the extract codes would be programmed in the *Drycodes* column of Miltron *Display H, page 3, field B*. If the CBW is Mentor-controlled, they would be entered, instead of drycode, in the *Post Wash Codes* zone of the *Formula Programming* page. Of course, this means that another method must be used to introduce dry codes farther downstream in the system, if needed.

2.4. The Empty Load Signal—The CBW does not provide an explicit “empty load” (also referred to as pass empty) allied output. However, the “don't main press goods” output, normally used with the Milnor two-stage press, may be used for this purpose. Wire this output to the empty load input on the extractor. Whether the CBW is Miltron or Mentor controlled, enable this output for the “pass empty” formula by programming a value of 1 for press pressure. On the Mark 8 Miltron, this is *Display H, Page 3, Field E*. On the Mentor, this is the *Pressure* drop down box (not the *Pass Empty* check box) in the *Post-Wash Codes* zone of the *Formula Programming* page.

2.5. The End Extract (Early Call) and Start Extractor Signals—The end extract (early call) (if used) and start extractor inputs on the extractor can both be enabled at the same time. Hence, they can be served by a single output on the CBW. There is no explicit allied output provided for this purpose. Rather, a programmable output (C-bit) assigned to the last module must be allocated and wired to both the early call / end extract and loading mode / start extractor inputs on the extractor. This output is programmed as follows (whether the CBW is Miltron or Mentor controlled):

Compatibility = off
Op code = 09 (“Early Call”)
Hold code = N (or not checked)
Init code = A
On time = 255 (for every formula)

2.6. The Start Cycle Signal—Although the CBW does provide an explicit start press allied output, this is only for use with the press, not the extractor. Rather, for proper timing, a programmable output assigned to the last module must be allocated and wired to the to the extractor start cycle input. Whether a Miltron or a Mentor, this output is programmed as follows:

Compatibility = off
Hold code = N (or not checked)
Op code = 00 (“Standard Timed”)
Init code = H
On time = 004 (for every formula)

2.7. The Extractor Says Load Allowed Signal—The extractor says load allowed output on the extractor signals the CBW that it is free to receive a load. On a CBW with a Miltron controller or a Generation2 (G2) Mentor controller, connect this output to the explicitly provided press free allied input. The Generation3 (G3) Mentor controller does not provide an explicit press free input. On these machines, allocate a programmable input for this purpose and assign it input op code 11 (“Press Free”).

— End of BICXUI01 —

Milnor® Allied Interface Specifications and Signals, CBW®

An allied device that interfaces with the Milnor system machine equipped with Mark 5 or later microprocessor controls must meet the electrical specifications and functional requirements given in Section 1 "Electrical and Functional Specifications".

The "Signals..." section(s) herein identify the allied interface signals and provide related information (see Section 2 "How the Signals Tables Are Organized").

This document also provides useful information for troubleshooting allied interfaces:

- The **Display/code** and **Board/code** values in the signals tables, are cross-references to the output and input displays and to the output and input numbers on the I/O boards respectively. Section 4 "Monitoring Allied Interface Outputs and Inputs", explains how to use these cross-references.
- As an aid in working with **numeric signals**, Section 5 "Decimal / Binary Conversion and How It Applies to Allied Interfaces" explains how to determine, for any batch code, which value (off or on) each signal in a group should pass.

1. Electrical and Functional Specifications

WARNING 1: Electrocution and Electrical Burn Hazards—Contact with high voltage will electrocute or burn you. Power switches on the machine and the control box do not eliminate these hazards. High voltage is present at the machine unless the main machine power disconnect is off.

- Do not service machine unless qualified and authorized.
- Lock out and tag out power at the main machine disconnect before opening electric boxes and accessing electrical components.

For inputs from Milnor (Milnor outputs), the allied device must limit circuit load to that specified in Section 1.1, below. For outputs to Milnor (Milnor inputs), the allied device must supply circuitry that meets the specifications in Section 1.2, below. The functional requirements stated in Section 1.3 must be met for proper coordination and data exchange between the devices.

1.1. Permissible Load for Milnor Outputs

—For signals from Milnor to allied (Milnor outputs/allied inputs), Milnor supplies potential-free contacts located on board-mounted relays. The signals are conducted by traces on the board having the following capacity:

- Maximum voltage: 240V
- Maximum current: 0.5 amps
- Maximum VA: 3

CAUTION 2: Risk of Damage/Malfunction—Traces on control boards may burn out, requiring board replacement, if called upon to handle heavy currents. High voltages can cause arcing across traces.

- Do not apply loads exceeding the specified capacity.
- Do not use allied interface outputs to operate motors or for any other unintended purpose. These may, however, be used to operate relays that do not exceed the specified capacity.

1.2. Component Requirements for Milnor Inputs

—For signals from allied to Milnor (allied outputs/Milnor inputs–which connect directly to control boards and are used to ground Milnor control inputs), Milnor applies a low energy signal as follows:

- Voltage: 5VDC or 12VDC
- Minimum current: 5 milliamps

The potential-free contacts supplied by allied and the circuit wiring must be capable of faithfully carrying these low energy signals.

CAUTION 3: Risk of Bad Data—Resistance due to wire length or deteriorated contacts can mask signals. Inadequate shielding against electrical noise can trigger false signals.

- Keep wire runs as short as possible.
- Use a digital signal ground connection (wire number 2G on the CBW; wire number 7 on other Milnor devices), not merely chassis ground.
- Ground any spare wires.
- Pass all wires through a ferrite bead.
- Replace relays that have worn or corroded contacts.
- Do not run input wiring adjacent to, or in the same conduit with, any wires carrying AC. For example, do not run input and output wiring in the same conduit if AC is used to power Milnor output/allied input signals.

1.3. Functional Requirements

1. For numeric signals (batch codes) from allied to Milnor (allied loading interface), all signals must be properly set when the operational signal indicating this data is valid occurs. Signals must remain set for the longer of 5 seconds or through any subsequent operational signal requiring this data (see “Loading Interface non-Numeric Signals...”). Milnor will read all numeric signals during this time.
2. For numeric signals from Milnor to allied (allied discharge interface), allied must not read signals until the data valid, or other operational signal indicating data is valid occurs (see “Discharge Interface non-Numeric Signals...”).
3. Although not all the operational signals listed in the tables are necessarily required, (the signals used will vary with specific machine models and with variations in the operating cycle), those signals used, must occur in the order listed.
4. When connecting numeric signals between devices, ensure that signals are properly matched up with respect to significance (least significant-to-least significant, next least significant-to-next least significant, etc.).

2. How the Signals Tables Are Organized

For an allied device that loads the Milnor machine, Milnor provides an allied **loading interface**. For an allied device that receives goods from (discharges) the Milnor machine, Milnor provides an allied **discharge interface**. In both cases, some signals are used in groups to pass **numeric** values in binary and some signals are used individually to pass **non-numeric** (on/off) values. The receiving device can read the groups of numeric signals in any order as long as it reads this data during the window of time within which it is valid. However, because each signal within a group of numeric signals represents a specific digit of the binary number, the order of significance of the signals (**digit order**) must be understood and must match on sending and receiving devices. Most non-numeric signals provide operational information which must be exchanged according to a predetermined “handshaking” scheme. Hence, the sequence in which operational signals occur (**enabling order**) is critical. Accordingly, the signal information is presented in four tables:

1. **Loading interface numeric *input* signals and digit order**—In this table, signals are depicted in digit order, that is, the way they would be read as a binary number. The rightmost **column** represents the signal that carries the least significant digit. Each adjacent **column** to

the left is the signal representing the digit of next higher significance. The table is divided into **row** groups—one row group for each batch code provided. Each row group provides pertinent information for the signals used with that batch code. In an allied loading interface, all numeric signals pass from allied to Milnor and are therefore, **inputs** to Milnor.

2. **Loading interface non-numeric signals and enabling order**—In this table, each **row** represents a signal and each **column** provides pertinent information for that signal. Generally, these signals must be exchanged by the interfaced devices in the order listed. The labels given to operational signals in the schematics can vary from device to device. However, the document “Summary of Milnor Allied Interface Capability” provides generic names for these. The right-hand column of this table provides both the generic (function) name and the signal name as shown in the schematic, except where these are the same.
3. **Discharge interface numeric *output* signals and digit order**—This table is arranged the same as the “loading interface numeric...” table. However, in an allied discharge interface, all numeric signals pass from Milnor to allied and are therefore, **outputs** from Milnor.
4. **Discharge interface non-numeric signals and enabling order**—This table is arranged the same as the “loading interface non-numeric...” table. As with a loading interface, the devices need to exchange these signals in the order shown.

3. Signals—CBW®'s (Tunnels) with Mark 8 and Mark 9 Controls

[Document BICALC03]

This document applies to all currently manufactured CBW's. However, portions of this document specifically pertain to either the Mark 8 or the Mark 9 tunnel control system. Table 1 clarifies which types of CBW and Mentor software each control system is used with.

Table 1: Distinctions Between CBW's That Use Mark 8 Controls and Those That Use Mark 9

	Tunnel Control System	
	Mark 8	**Mark 9**
Model prefix(es)	76032	76028 and 76039
Common names	76032 CBW ("Classic")	G3 ("Generation3") CBW
Hardware type	individual modules	welded groups of modules
Mentor software provided	G2 ("Generation2")*	G3 ("Generation3")
* The predecessor to the G3 CBW was known as the G2 ("Generation2") CBW. This product had welded units like the G3 CBW, but Mark 8 wiring, like the 76032 CBW. It and the 76032 CBW used the same Mentor software, which became known as "Generation2" software. The 76032 CBW continues to use this software.		

Like other Milnor® system machines, the CBW® explicitly provides several signals to be used when interfacing with allied devices. However, some of these must be enabled on the Mentor® controller *CBW Hardware Configuration* page before they will function. For the loading interface, you must enable:

- *Allied Weight* (weight)
- *Remote Soil Select* (formula code)
- *Remote Customer Select* (customer code)

For the discharge interface, you must enable *Data Pass* (all batch data outputs).

The Mentor controller also provides user-definable outputs. Additionally, Mentor controllers with G3 software (the G3 CBW) provide user-definable inputs. If a particular allied interface signal is not explicitly provided, it may be possible to define the needed output or input.

3.1. Explicit Allied Interface Signals

Table 2: Loading Interface Numeric Input Signals and Digit Order—CBW

Signal name on schematic (e.g., Drycode A, B, etc.)-->		Common Conn.	Most Significant		Dedicated Connections (Binary Data Signals)							Least Significant
			K	J	H	G	F	E	D	C	B	A
256 Formula or Goods Codes (000 - 255)	Multi-terminal	WCG			WCG	WCG	WCG	WCG	WCG	WCG	WCG	WCG
	Pin Number	9			8	7	6	5	4	3	2	1
	Wire Number	2G			EAH	EAG	EAF	EAE	EAD	EAC	EAB	EAA
	Display/code	--			View on Mentor "Direct and Standard Inputs" page.							
	Board/code	--			io2/15	io2/14	io2/13	io2/12	io2/11	io2/10	io2/9	io2/8
1000 (usable) Customer Codes (000 - 999)	Multi-terminal	WCF	WCF	WCF	WCF	WCF	WCF	WCF	WCF	WCF	WCF	WCF
	Pin Number	9	11	10	8	7	6	5	4	3	2	1
	Wire Number	2G	DAK	DAJ	DAH	DAG	DAF	DAE	DAD	DAC	DAB	DAA
	Display/code	--	View on Mentor "Direct and Standard Inputs" page.									
	Board/code	--	io1/10	io1/9	io2/7	io2/6	io2/5	io2/4	io2/3	io2/2	io2/1	io2/0
Weight (0 to 409.5 Lbs)*	Multi-terminal	WCI	WCU	WCU	WCU	WCU	WCU	WCU	WCU	WCU	WCU	WCU
	Pin Number	9	10	9	8	7	6	5	4	3	2	1
	Wire Number	2G	XX2	XX1	XXZ	XXY	XXX	XXW	XXV	XXU	XXT	XXS
	Display/code	--	Not available for viewing on Mentor screens.									
	Board/code	--	io**/9	io**/8	io**/7	io**/6	io**/5	io**/4	io**/3	io**/2	io**/1	io**/0

* A range of load weight from 0 to 409.5 lb's (in tenths of a pound) can be passed. This requires twelve signals—the ten shown in the table plus L and M. Data for L are: connector WCU, pin 11, wire XX3, Board/code io**/10. Data for L are: connector WCU, pin 12, wire XX4 Board/code io**/11.

** The position of this board is variable.

Table 3: Loading Interface non-Numeric Signals and Enabling Order—CBW (see Note 1)

Signal Direction	Common Connection*			Dedicated Connection			Display / code	Board / code *****	Function Name / Signal Name
	Multi-terminal	Pin	Wire	Multi-terminal	Pin	Wire			
Milnor will read in the batch data (previous table) when the tunnel cylinders pause at top dead center during transfer--before it enables the "load allowed / start conveyor or release bag" signal. Hence, the batch data signals must be set before the "discharge allowed / bag ready" signal is enabled.									
Input	WCG	9	2G	WCG	11	none	***	io1/2	discharge allowed / bag ready
Output*	WCH	5	NAE	WCH	6	NAF	****	io2/4	load allowed / start conveyor or release bag**

* For outputs from Milnor, Milnor does not normally assign either pin of the potential-free contact as the common. Hence, both pins have unique pin and wire numbers.

** This output provides potential-free contacts, but actuates during every cycle and bypasses the loading conveyor controls on the Mentor console. The console controls are designed for use with Milnor loading conveyors only and permit placing the load conveyor in "hold" to pass empty pockets in the tunnel, but they do not provide potential-free contacts.

*** Shown on the Mentor "Direct and Standard Inputs" page as "Bag Ready."

**** Shown on the Mentor "Standard Outputs" page as "Start Conveyor."

***** Applies to G3 CBW (Mark 9) only. The 76032 CBW uses Mark 8 controls which do not provide boards with LED's.

Note 1: Several allied interface inputs and outputs shown on the schematics are not usable with current production machines. These were used with the Miltron™ Rail Sequencer (Display I), which is not

provided with the Mentor controller. They include the Rail Empty and Halt Rail inputs and the Rail Sequencer bit 0 through bit 3 outputs.

Table 4: Discharge Interface Numeric Output Signals and Digit Order—76032CBW (Mark 8)

Signal name on schematic (e.g., Drycode A, B, etc.)-->		Common Conn.*	Most Significant		Dedicated Connections (Binary Data Signals)							Least Significant
			J	I	H	G	F	E	D	C	B	A
16 Drycodes (00 - 15)	Multi-terminal	n/a							WCIR	WCIR	WCIR	WCIR
	Pin Number	n/a							4 • 20	3 • 19	2 • 18	1 • 17
	Wire Number	n/a							DDH • DDG	DDF • DDE	DDD • DDC	DDB • DDA
	Display/code	--							Not available.			
	Board/code	--							Not available.			
4 Cooldown Codes (0 - 3)	Multi-terminal	n/a									WCIR	WCIR
	Pin Number	n/a									6 • 22	5 • 21
	Wire Number	n/a									DDM • DDL	DDK • DDJ
	Display/code	--									Not available.	
	Board/code	--									Not available.	
8 Destination Codes (0 - 7)	Multi-terminal	n/a								WCIR	WCIR	WCIR
	Pin Number	n/a								9 • 25	8 • 24	7 • 23
	Wire Number	n/a								DDT • DDS	DDR • DDO	DDP • DDN
	Display/code	--								Not available.		
	Board/code	--								Not available.		
16 Extract Codes (00-15)	Multi-terminal	n/a							WCJR	WCJR	WCJR	WCJR
	Pin Number	n/a							4 • 20	3 • 19	2 • 18	1 • 17
	Wire Number	n/a							EDH • EDG	EDF • EDE	EDD • EDC	EDB • EDA
	Display/code	--							Not available.			
	Board/code	--							Not available.			
1024 (1000 usable) Customer Codes (000-999)	Multi-terminal	n/a	WCJR	WCJR	WCJR	WCJR	WCJR	WCJR	WCJR	WCJR	WCJR	WCJR
	Pin Number	n/a	14 • 30	13 • 29	12 • 28	11 • 27	10 • 26	9 • 25	8 • 24	7 • 23	6 • 22	5 • 21
	Wire Number	n/a	ED4 • ED3	ED2 • ED1	EDZ • EDY	EDX • EDW	EDV • EDU	EDT • EDS	EDR • EDO	EDP • EDN	EDM • EDL	EDK • EDJ
	Display/code	--	Not available.									
	Board/code	--	Not available.									

* For outputs from Milnor, Milnor does not normally assign either pin of the potential-free contact as the common. Hence, both pins have unique pin and wire numbers. In this table these are listed together in the same cell, with a dot between (e.g., 1 • 17).

Table 5: Discharge Interface Numeric Output Signals and Digit Order—G3 CBW (Mark 9)

Signal name on schematic (e.g., Drycode A, B, etc.)-->		Common Conn.*	Most Significant		Dedicated Connections (Binary Data Signals)						Least Significant
			K	J	H	G	F	E	D	C	B	A
1000*** Formula or Goods Codes (000 - 999)	MTA Number	n/a	14	14	14	14	14	14	14-10 • 4-15	14-10 • 4-5	14	14
	Pin Number	n/a	10 • 18	10 • 8	10 • 17	10 • 7	10 • 16	10 • 6			4 • 14	4 • 13
	Wire Number	n/a	n/a	n/a	n/a	n/a	n/a	n/a	n/a	n/a	n/a	n/a
	Display/code	--	Not available.									
	Board/code	--	o6/21	o6/20	o6/19	o6/18	o6/17	o6/16	o6/15	o6/14	o6/13	o6/12
16 Drycodes or 16 Extract Codes (00 - 15)	Multi-terminal	n/a							WCIR	WCIR	WCIR	WCIR
	Pin Number	n/a							4 • 20	3 • 19	2 • 18	1 • 17
	Wire Number	n/a							DDH • DDG	DDF • DDE	DDD • DDC	DDB • DDA
	Display/code	--							Not available.			
	Board/code	--							o1/3	o1/2	o1/1	o1/0
4 Cooldown Codes (0 - 3)	Multi-terminal	n/a									WCIR	WCIR
	Pin Number	n/a									6 • 22	5 • 21
	Wire Number	n/a									DDM • DDL	DDK • DDJ
	Display/code	--									Not available.	
	Board/code	--									o1/5	o1/4
8 Destination Codes (0 - 7)	Multi-terminal	n/a								WCIR	WCIR	WCIR
	Pin Number	n/a								9 • 25	8 • 24	7 • 23
	Wire Number	n/a								DDT • DDS	DDR • DDQ	DDP • DDN
	Display/code	--								Not available.		
	Board/code	--								o1/8	o1/7	o1/6
256 or 1000*** Customer Codes (000 - 255 or 999)	Multi-terminal or MTA No.	WCIR**	mta14	mta14	WCIS	WCIS	WCIS	WCIS	WCIS	WCIS	WCIS	WCIS
	Pin Number	31 or 32	10 • 19	10 • 9	8	7	6	5	4	3	2	1
	Wire Number	DD5	n/a	n/a	DCH	DCG	DCF	DCE	DCD	DCC	DCB	DCA
	Display/code	--	Not available.									
	Board/code	--	o6/23	o6/22	o1/23	o1/22	o1/21	o1/20	o1/19	o1/18	o1/17	o1/16
Weight (0 to 409.5 Lbs) *** @	MTA Number	n/a	13-10 • 14-1	13	13	13	13	13	13	13	13	13
	Pin Number	n/a		9 • 19	8 • 18	7 • 17	6 • 16	5 • 15	4 • 14	3 • 13	2 • 12	1 • 11
	Wire Number	n/a	n/a	n/a	n/a	n/a	n/a	n/a	n/a	n/a	n/a	n/a
	Display/code	--	Not available.									
	Board/code	--	o6/9	o6/8	o6/7	o6/6	o6/5	o6/4	o6/3	o6/2	o6/1	o6/0

*** For outputs from Milnor, Milnor does not normally assign either pin of the potential-free contact as the common. Hence, both pins have unique pin and wire numbers. These are listed together in the same cell, with a dot between (e.g., 1 • 17).**

**** To provide eight Customer code signals with limited available terminals, Customer codes A through H, along with the "Start Press" and "Single Cake" signals, had to share board-level connector 1MTA14-10 (WCIR, pin 31 or 32).**

***** Requires optional extra data pass board. Currently, outputs on this board are not wired to multi-terminals in the electric box. Connections must be made directly to the pins on the board-level MTA connectors**

@ A range of load weights from 0 to 409.5 (in tenths of pounds) can be passed. This requires twelve signals–the ten shown in the table plus L and M. Data for L: connector 6MTA14, pins 2 and 11; board/code o6/10. Data for M: connector 6MTA14, pins 3 and 12; board/code o6/11.

Table 6: Discharge Interface non-Numeric Signals and Enabling Order—CBW

Signal Direction	Common Connection*			Dedicated Connection			Display / code	Board / code ****	Function Name / Signal Name
	Multi-terminal	Pin	Wire	Multi-terminal	Pin	Wire			
Input	WCI	9	2G	WCI	6	JAP	**	***	load allowed / press free (G2 Mentor only***)
Milnor sets all batch data (previous two tables and next six signals) before it enables the "transfer complete / start press" signal.									
Output*	WCIR	14	DD2	WCIR	30	DD1	**	o1/13	new formula
Output*	WCIR	13	DD4	WCIR	29	DD3	**	o1/12	new customer
Output*	WCIR	15	DD6	WCIR	31	DD5	**	o1/14	single cake
Output*	WCIR	11	DDX	WCIR	27	DDW	**	o1/10	low pressure
Output*	WCIR	10	DDV	WCIR	26	DDU	**	o1/9	third pressure
Output*	WCIR	12	DDZ	WCIR	28	DDY	**	o1/11	no pressure / don't main press goods *****
Output*	WCIR	16	DD8	WCIR	32	DD7	**	o1/15	transfer complete / start press

* For outputs from Milnor, Milnor does not normally assign either pin of the potential-free contact as the common. Hence, both pins have unique pin and wire numbers.

** Not available for viewing on the Mentor screens.

*** On the G3 CBW, this input must be defined using an assignable input as explained elsewhere in this document.

**** Applies to G3 CBW (Mark 9) only. The 76032 CBW uses Mark 8 controls which do not provide boards with LED's.

***** An explicit "empty load" allied output is not provided with the CBW. However, the "don't main press goods" output may be used for this purpose. For example, in a CBW-to-Milnor extractor allied interface, this output may be connected to the extractor "empty load" input. In the "Post Wash Codes" zone of the Formula Programming Page, simply ensure that for the "pass-empty" formula, Pressure = 00.

3.2. **Defining Special Purpose Allied Interface Signals**—Detailed information on programmable outputs and inputs is provided in the Mentor reference manual. You should have a solid understanding of the sections on assigning functions, programming formulas, programming Generation3 inputs and outputs (G3 CBW only), and assigning interpret relays (76032 CBW only), before attempting to define outputs or inputs for allied interface use. The following information supplements those explanations with regard to allied interface signals.

Mentor controllers are normally provided with a certain number of programmable outputs (and inputs on the G3 CBW) in addition to those preprogrammed by the factory to meet the machine's anticipated requirements. Any extra outputs and inputs are available for any use including providing allied interface signals. Defining an output or input in the field involves wiring and programming it.

3.2.1. Wiring Programmable Outputs—Connection points for programmable outputs are available in every module electric box of the 76032 CBW and in the module section (right side) of the main control box, on the front of the G3 CBW. Connection points are on the connectors designated WCA. (Refer to the schematics to identify pins and wires.) However, programmable outputs, by themselves, do not provide the potential-free contacts normally needed for allied interface outputs. Normally, it is necessary to use the 120VAC signal provided by the programmable output to control an interpret relay that in turn, provides potential free contacts. (Refer to the interpret relay schematic page in the schematic manual.)

3.2.1.1. Working With Interpret Relays—Interpret relays are optional equipment. Generally, when a CBW is ordered, the purchaser only buys the number of interpret relays he knows are needed. Usually, these are for chemical supply pumps. If the need for special purpose allied interface outputs was anticipated, interpret relays should be available. Otherwise, it will be necessary to purchase and install an interpret relay for each allied interface output to be defined. (Contact Milnor Technical Support for assistance.)

All interpret relays used on a CBW are located in one electric box regardless of the location of the programmable output used to control it. If you need an interpret relay for an allied interface output, you must consider availability and CBW type, as explained below.

3.2.1.1.1. 76032 CBW (Mark 8 tunnel controls and Generation2 Mentor Software)—On the 76032 CBW, the interpret relay box is located on the side of the tunnel. On these machines, interpret relays are programmatically assignable; that is, the user specifies on the Mentor *Interpret Relay Assignment* page, which programmable output he wants the interpret relay to be operated by.

3.2.1.1.2. G3 CBW (Mark 9 tunnel controls and Generation3 Mentor Software)—On the G3 CBW, the interpret relay box is located on the front of the tunnel, above the main control box. On the G3 CBW (G3 Mentor software), there is no software control over the association between programmable outputs and interpret relays. If additional interpret relays are purchased after the CBW is installed, these must be hard wired to their respective programmable outputs in the field.

3.2.1.2. Relating the Output to the Bit Number—Because implementing special purpose allied outputs involves both wiring and programming, the implementer must be able to associate the physical output (to be wired) with the correct bit number displayed on the Mentor screens. The Mentor software automatically assigns bit numbers to programmable outputs according to one of two schemes, as explained below.

3.2.1.2.1. 76032 CBW (Mark 8 tunnel controls and Generation2 Mentor Software)—In Generation2 Mentor software, the bit numbers for a given module apply to the outputs on the I/O board(s) provided **with that module**. A two digit bit number is assigned to each programmable output, from the first output (output 0) on the first I/O board (board #1) to the last output on the last board provided with that module. Bit numbering is sequential, beginning with 01 (i.e., output 0 on I/O board #1 on a given module is represented as output 01 on that module). Because output numbering starts over in each module, on the Mentor screen you will see bit numbers repeated several times in different module columns of the *Function Programming* and the *Formula Programming* pages. For example, you may see Bit # 05 associated with several modules, but each of these is a different output.

3.2.1.2.2. G3 CBW (Mark 9 Tunnel Controls and Generation3 Mentor Software)—In Generation3 Mentor software, a three digit bit number is assigned to each programmable output, from the first output (output 0) on the first I/O board (I/O board #1) to the last output on the last board on that machine, used for programmable outputs. As previously mentioned, these boards are located in the module section (right side) of the main control box on the front of the machine. Bit numbering is sequential, starting with 001 (i.e., output 0 on I/O board #1 is represented as output 001). Because bit numbering is machine-wide (not per module), a given bit number will appear only once on the Mentor *Function Programming Page* and the *Formula Programming Page*.

3.2.2. Wiring Inputs On the G3 CBW (Mark 8 Tunnel Controls)—Connection points for programmable inputs are available in the module section (right side) of the main control box, on the front of the G3 CBW. Connection points are on the connectors designated WCB. Refer to the schematics to identify specific pins and wire numbers.

3.2.3. Programming Outputs and Inputs—When you program an output or input, you assign various properties to it. Some properties, such as the Hold code are simple on/off decisions. Some, such as the Op code provide a list of values to select from. Some values, such as Output Op Code 09 “Early Call” and Input Op code 11 “Press Free” are specifically intended for use with allied interface signals. For example, if the Miltrac controller is not used, a Milnor CBW may be interfaced with a Milnor centrifugal extractor via an allied interface. In this situation, three special purpose operational signals, two of which use the mentioned Op codes, must be defined. These signals are described below, as examples:

3.2.3.1. Example: “Early Call” Output—An output assigned to the last CBW module must be defined to provide the signal needed by two load interface operational inputs on the Milnor extractor. It is permissible to trigger these inputs simultaneously, (thus requiring only one programmable output on the CBW, not two). The extractor inputs include:

- “early call / end extract”
- “loading mode / start extractor”

On the left side of the Mentor *Function Programming Page*, define the function properties for the early call output as follows:

- Function name: “Early Call”
- C (Compatibility) = 0
- H (Hold Code) = not checked
- Op Code = 09 (“Early Call”)
- S (Show on formula programming page) = checked

On the right side of the Mentor *Function Programming Page*, the programmable output will be represented in the *Bit* and *Init* columns for the last module. Define the module-specific properties as follows:

- Bit = the identifier number for this output (see Section 3.2.1.2 “Relating the Output to the Bit Number”).
- Init = A

On the *Formula Programming Page*, assign On Time = 255 **for every formula** (see Note 2).

Note 2: The extractor load scoop must be lowered (or the door raised) even in the case of the pass empty formula, or the extractor will not signal that it is OK for the CBW to transfer (extractor load interface operational output “load allowed / start discharge”).

3.2.3.2. Example: “Start Extract Cycle” Output—An output assigned to the last CBW module must be defined to provide the signal needed by the “transfer complete / start cycle” input on the extractor that raises the load scoop (or lowers the door) and starts the extract cycle. On the left side of the Mentor *Function Programming Page*, define the function properties as follows:

- Function name: “Start Extract Cycle”
- C (Compatibility) = 0
- H (Hold Code) = not checked
- Op Code = 00 (“Standard Timed”)
- S (Show on formula programming page) = checked

On the right side of the Mentor *Function Programming Page*, the programmable output will be represented in the *Bit* and *Init* columns for the last module. Define the module-specific properties as follows:

- Bit = the identifier number for this output (see Section 3.2.1.2 “Relating the Output to the Bit Number”).
- Init = H

On the *Formula Programming Page*, assign On Time = 004 **for every formula** (see Note 2).

3.2.3.3. Example: “Extractor Free” Input (G3 CBW)—The CBW needs a signal to indicate when the extractor is free to receive a load. This is provided by the “load allowed / extractor says load allowed” output signal on the extractor. On the 76032 CBW, an explicit “press free” input is provided. But on the G3 CBW, a special input must be defined to read this signal. On the Mentor

Input Definition Page, define this input as follows:

- Input Name = “Extractor Free”
- Op Code = 11 “Press Free”
- Bit = the identifier number for the input used (see Section 3.2.2 “Wiring Inputs On the G3 CBW (Mark 8 Tunnel Controls)”).

4. Monitoring Allied Interface Outputs and Inputs

The status of outputs and inputs can be monitored on the machine display while the machine is in operation, as explained in the machine reference manual (see Note 3 and Note 4). Beginning with Mark 4 controls (Mark 9 on the CBW), output and input status can also be monitored on the I/O boards. These boards contain LED's—one green LED for each input and one red LED for each output (see Note 5). When the LED is illuminated, the circuit is made.

Note 3: It is also possible to actuate certain outputs for testing, as explained in the reference manual. However, the “Display/code” values in the tables herein, refer only to the displays used to view outputs/inputs.

Note 4: The outputs and inputs available for viewing on the display include some (but not all) allied interface signals as well as signals for many other functions. See the reference manual for a listing of all outputs and inputs that can be monitored during operation.

Note 5: Almost all allied interface outputs and inputs are passed via the I/O boards (peripheral boards) and are therefore, represented by LED's on the boards. A few, however, are passed directly via the processor board (direct outputs/inputs). The processor board does not contain LED's.

4.1. Identifying Outputs and Inputs on the Display Pages —On CBW's, some allied inputs are available for viewing on the Mentor *Direct and Standard Inputs* page (as indicated in the signals tables). It is fairly easy to identify signals on the Mentor because the signal names are displayed.

The single stage press, two stage press, centrifugal extractor, shuttle, COBUC, and dryer use a two or four line by 20 character LCD display (see Note 6). On these devices, each output or input is represented by a character (lower or upper case letter) on the top line and a plus (+) or minus (-) sign under the character indicating the on/off status of the signal. The outputs and inputs span several display pages. Each page is accessed via the keypad and the procedures for doing so are explained in the reference manual. The “Display/code” values listed in the tables herein tell you which display page and character represent the indicated signal, as shown in the following example:

i2/H

Where:

i = **input** display page (o = **output** display page)

2 = the second in a series of input display pages. See the reference manual for the keystrokes used to access each display page in the series. Note that in some software such as the centrifugal extractor, page numbering begins with 0 (zero); that is, the first page is page #0. Hence, on software such as the extractor, i2 = inputs page #1 (the second inputs page).

H = This input is represented by the character “H” on the display.

Note 6: When the Milnor Dryer/Shuttle Controller is provided for a new installation, the LCD displays are omitted from the controllers for any shuttle(s) and dryer(s) also provided. In this case, inputs and outputs

may be viewed on the monitor supplied with the shuttle/dryer controller. As with the CBW Mentor controller, it is easy to identify signals because the signal names are displayed.

4.2. Identifying Output and Input LED's On the I/O Boards (all except 76032 CBW)—Two types of output/input peripheral boards are used in conjunction with the allied interfaces covered herein. Their designations and capacities are:

1. **BO24-x**—contains 24 outputs (and no inputs). x is “1”, “2”, etc. indicating the first, second, etc. such board in this machine.
2. **BIO-x**—contains 16 inputs and 8 outputs. x is “1”, “2”, etc. indicating the first, second, etc. such board in this machine.

For all except the CBW, the peripheral boards are located in the low voltage electric box. The arrangement and combination of these boards within the card cage varies with the machine type and optional equipment provided. For the G3 CBW (Mark 9), the boards that support the explicit allied interface signals are located in the card cage in the left (Standard Output) section of the main control box.

A tag located in the electric box identifies the boards that may be provided and shows the position of each board in the card cage. Each 24 output board has a set of red LED's (numbered 0 through 23). Each 16/8 I/O board has two sets of LED's—a red set for the outputs (numbered 0 through 7) and a green set for the inputs (numbered 0 through 15). The “Board/code” values listed in the tables herein tell you which board and output or input number represent the indicated signal, as in the following example:

io2/5

Where:

io2 = the 16/8 I/O board designated “BIO-2”. (Other examples: io1=BIO-1, o1=BO24-1, o2=BO24-2)

5 = input #5, if this signal is an input or output #5 if this signal is an output.

5. Decimal / Binary Conversion and How It Applies to Allied Interfaces

Batch codes (decimal numbers) are converted to binary by the sending controller, then passed via the numeric signals to the receiving controller, where they must be converted back to decimal numbers. For example, if an interface provides for passing 16 drycodes, then to pass drycode 14 (binary 1110), drycode signals D, C, B, and A (from most to least significant) must be on, on, on, and off respectively, during the “data valid” window.

Table 7 “Numeric Signal Decimal and Binary Values” shows, for the first 16 decimal numbers (e.g., drycodes 00 through 15), the corresponding binary numbers and which numeric signal carries each binary digit. This table's columns correspond to, and align with the columns in each table of numeric signals herein. For higher numbers, use the “Decimal Value of Signal” values in this table to convert between decimal and binary as explained herein.

Table 7: Numeric Signal Decimal and Binary Values

		Decimal Value of Group	Most Significant				Binary Data Signals					Least Significant
Signal name on schematic (e.g., Drycode A, B, etc.)-->			**J or K or 9**	**I or J or 8**	**H or 7**	**G or 6**	**F or 5**	**E or 4**	**D or 3**	**C or 2**	**B or 1**	**A or 0**
Decimal Value of Signal-->			**512**	**256**	**128**	**64**	**32**	**16**	**8**	**4**	**2**	**1**
The number of data signals required for typical ranges of batch codes are as follows:		0							0	0	0	0
		1							0	0	0	1
		2							0	0	1	0
		3							0	0	1	1
		4							0	1	0	0
Code Range	Signals Required	5							0	1	0	1
		6							0	1	1	0
00-15	A-D	7							0	1	1	1
00-31	A-E	8							1	0	0	0
00-63	A-F	9							1	0	0	1
000-127	A-G	10							1	0	1	0
000-255	A-H	11							1	0	1	1
000-511	A-I or J	12							1	1	0	0
0000-1023	A-J or K	13							1	1	0	1
		14							1	1	1	0
		15							1	1	1	1

For brevity, this table shows only the binary numbers for decimals 0 - 15 (e.g., decimal 7 = binary 0111).

Use the "Decimal Value of Signal" values above, to convert between decimal and binary, for any decimal number between 16 and 1023.

See explanations of decimal / binary conversion herein.

For convenience, an example and explanations of converting between decimal and binary follow. Many other examples and explanations can be found in mathematics texts, on the Internet, etc. Also, some pocket calculators and many computer programs are available for converting between decimal and binary.

Note 7: In Table 8, which follows, the “Decimal value of binary 1 in this position” is the same as “Decimal Value of Signal” in Table 7.

Table 8: Decimal Values for Binary Digit 1 In the First Ten Positions

Significance of digit	**most**									**least**	
Position of digit	**10**	**9**	**8**	**7**	**6**	**5**	**4**	**3**	**2**	**1**	
Decimal value of binary 1 in this position	**512**	**256**	**128**	**64**	**32**	**16**	**8**	**4**	**2**	**1**	
Example binary number	1	0	0	1	0	1	1	0	1	0	
Decimal value carried down for this example	512	0	0	64	0	16	8	0	2	0	= 602

5.1. Converting Decimal to Binary—Referring to Table 8, if you want to convert decimal number 602 to binary, use the “Decimal value of binary 1 in this position” values, as follows:

512 = highest value not exceeding 602.
602 – 512 = 90
64 = highest value not exceeding 90.
90 – 64 = 26
16 = highest value not exceeding 26.
26 – 16 = 10

8 = highest value not exceeding 10.
10 – 8 = 2
2 = highest value not exceeding 2.
2 – 2 = 0

In the above arithmetic, you used the decimal values 512, 64, 16, 8, and 2. You did not use 256, 128, 32, 4, and 1. Placing a 1 in the position for each decimal value used and a 0 (zero) in each position not used, yields 1001011010. Hence, decimal 602 = binary 1001011010.

5.2. Converting Binary to Decimal—Referring to Table 8, if you want to convert binary to decimal, simply sum the decimal values corresponding to the 1's in each position of the binary number. Keep in mind that while a 1 in any position has a certain positive decimal value, a 0 (zero) in any position has the decimal value 0 (zero). The conversion for binary 1001011010 looks like this:

512 + 0 + 0 + 64 + 0 + 16 + 8 + 0 + 2 + 0 = 602

Hence, binary 1001011010 = decimal 602.

— End of BICALC02 —

HELMS Data Interface

BNTUUI02.C01 0000305564 B.2 A.2 8/26/20 9:41 AM Released

This document describes how to connect a Milnor® CBW® tunnel washer to a chemical vendor controller with a HELMS data interface in the field.

1. Requirements

BNTUUI02.C02 0000305563 B.2 3/30/21 1:18 PM Released

The interface described in this document requires the following software and hardware:

- Mentor® controller software must be version 3.2 or later
- Tunnel washer processor board software must be 25704 or later
- Milnor® 6-output board solid state (part number 08BN6OBT) must be present in the system

2. Wiring

BNTUUI02.C03 0000305561 B.2 3/30/21 4:09 PM Released

See schematic W9CBW3NBB in schematic manual ME76CBW3AE for diagrams of the HELMS interface wiring.

Figure 1. HELMS Interface Wiring

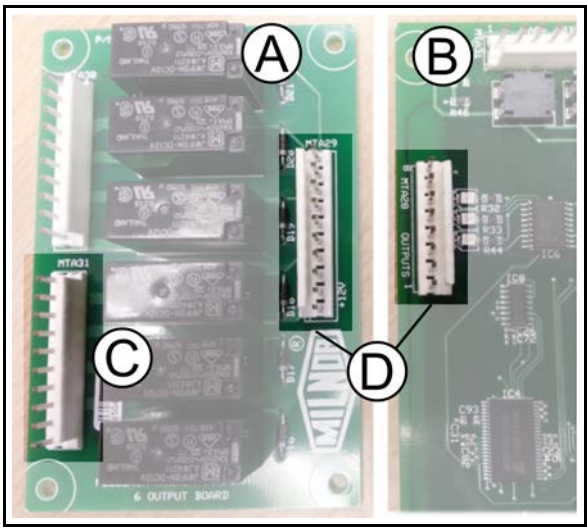

Legend

A . . . Milnor® 6-output board (08BN6OAT)

B . . . Milnor® processor board

C . . . Connection point between the chemical vendor controller and the Milnor® 6-output board

D . . . Connection point between the Milnor® 6-output board and the Milnor® processor board

2.1. Connections Between Milnor® Processor Board and 6-output Board

BNTUUI02.C04 0000305560 B.2 A.2 8/26/20 9:41 AM Released

- Connect MTA28-4 on the processor board and MTA29-4 on the output board.
- Connect MTA28-5 on the processor board and MTA29-5 on the output board.
- Connect MTA28-7 on the processor board and MTA29-9 on the output board.
- Connect MTA28-8 on the processor board and MTA29-10 on the output board.

2.2. Connections Between Milnor® 6-output Board and a Chemical Vendor Controller

BNTUUI02.C05 0000305559 B.2 3/30/21 1:20 PM Released

- Connect MTA31-8 on the output board and the DATA terminal on the chemical vendor controller.
- Connect MTA31-5 on the output board and the CLOCK terminal on the chemical vendor controller.
- Connect MTA31-6 on the output board and the 24 volts DC terminal on the chemical vendor controller.
- Connect MTA31-9 on the output board and the 24 volts DC terminal on the chemical vendor controller.

3. Signals

BNTUUI02.C06 0000305558 B.2 3/30/21 1:22 PM Released

This system requires six signals:

Run This signal originates at the Milnor® equipment. The source is a control bit programmed with op code 03. The init code, hold code, and on-time are ignored. This signal is ON when the tunnel washer is not in a hold condition.

Transfer This signal originates at the Milnor® equipment. The source is a control bit programmed with op code 00, init code H, and on-time of 10 seconds. This signal is ON for 10 seconds when the tunnel washer transfers.

Drop Bag This signal originates at the Milnor® equipment. The source is a relay connected to the START CONVEYOR output of the tunnel washer. The relay gives the Drop Bag signal to both the loading system and the chemical vendor controller. The START CONVEYOR output is MTA5-4 and MTA5-14 on the board at address 80. These pins are wired to terminals WCH-5 and WCH-6.

Figure 2. Location of WCH-5 and WCH-6

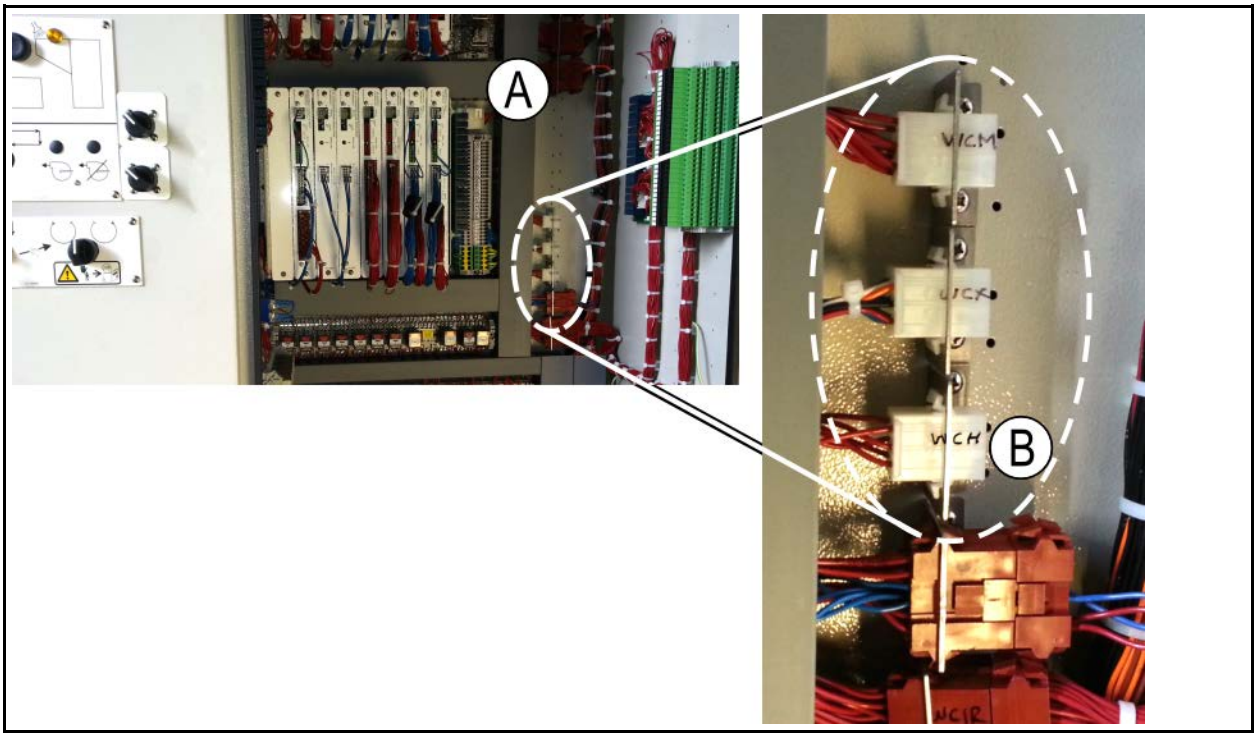

Legend

A . . . Right control box on tunnel washer
B . . . Connector WCH

Clock This signal originates at the Milnor® equipment. The source is pin MTA31-5 on the Milnor® 6-output board. This is the clock pulse used to send data to the chemical vendor controller.

Data This signal originates at the Milnor® equipment. The source is pin MTA31-8 on the Milnor® 6-output board. This is the pulsed data output to the chemical vendor controller.

Tunnel to Hold This signal originates at the Milnor® equipment. The source is a control bit programmed with op code 03. The init code, hold code, and on-time are ignored. This signal is ON when the tunnel washer is not in a hold condition.

End of document: BNTUUI02

BIUUUK01 (Published) Book specs- Dates: 20130308 / 20130308 / 20130308 Lang: ENG01 Applic: PCR UUU

How to Use Milnor® Electrical Schematic Diagrams

Milnor® electrical schematic manuals contain a table of contents/component list and a set of schematic drawings. These documents are cross referenced and must be used together.

The table of contents/components list shows, for every component on every schematic in the manual, the component item number (explained in detail below), statement of function, parent schematic number, part number, description and electric box location. In older manuals, two component lists are provided: List 1 sorts the components by function, and List 2 by type of component. Newer schematic manuals include only the list sorted by component number.

The schematic drawings use symbols for each electromechanical component, and indicate the function of each. Integrated circuits are not shown, but the function of each microprocessor input and output is stated. Certain electrical components not pertinent to circuit logic, such as wire connectors, are not represented on the schematic.

Most machines require several schematics to describe the complete control system and all the options available on the included models. In most manuals there are some schematic pages that don't apply to your specific machine because certain options and configurations are mutually exclusive or are not necessary in all markets. You may find it helpful to mark or remove such pages. A schematic page that only applies to a subset of machines will normally state, in the title, which models and/or options it covers. Compare this with the nameplate on your machine and with your purchase records.

Each schematic is devoted to circuits with common functions (e.g., microprocessor inputs, motor contactors). Schematics appear in the manual in alphanumeric order.

1. Component Prefix Classifications and Descriptions

Component item numbers consist of up to six characters and appear as part of a component's symbol on the schematic. The first two characters indicate the general class of component, and the remaining characters are a mnemonic for the function. For example, “CD” is the code for all time delay relays, and “SR” stands for safety reset. Thus, CDSR is a time delay relay that serves as a safety reset.

The following are descriptions of electrical components used in Milnor® machines. Descriptions are in alphabetical order by the component class code (two character prefix).

> **Note 1:** Some component class codes do not have a corresponding symbol, but are represented by a box and an accompanying note describing the component. Examples of such codes are BA (printed circuit board), ED (electronic display), and ES (electronic power supply).

BA=Printed Circuit Board—Insulating substrate on which a thin pattern of copper conductors has been formed to connect discrete electronic components also mounted on the board.

CB=Circuit Breaker (Figure 1)—Automatic switch that opens an electric circuit in abnormal current conditions (e.g., an overload).

Figure 1: Circuit Breaker (CB)

CD=Control, Time Delay Relay (Figure 2)—A relay whose contacts switch only after a fixed or adjustable delay, once voltage has been applied to its coil. The contacts switch back to normal (de-energized state) immediately when the voltage is removed.

Figure 2: Time Delay Relay (CD)

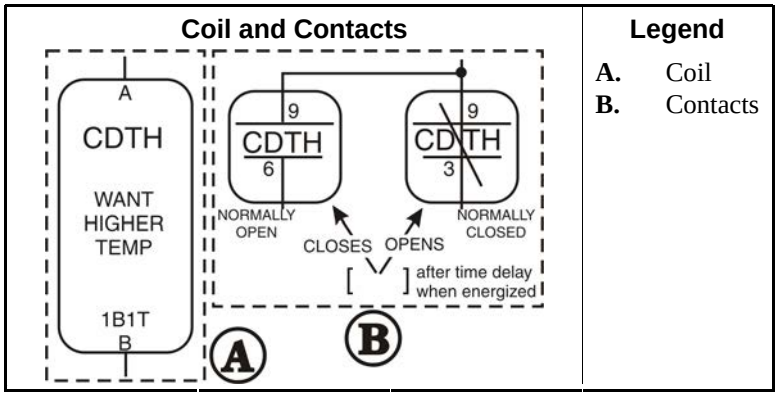

CL=Control, Latch Relay (Figure 3)—A relay which latches in an energized or set position when operated by one coil (the latch/set coil). The relay stays latched even though coil voltage is removed. The relay releases or unlatches when voltage is applied to a second coil (the unlatch/reset coil).

Figure 3: Latch Relay (CL)

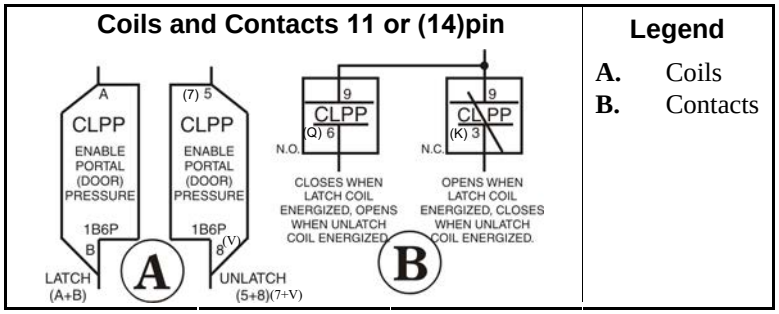

CR=Control, Relay (Figure 4)—A relay whose contacts switch immediately when voltage is applied to its coil and revert to normal when the voltage is removed.

Figure 4: Standard Relay (CR)

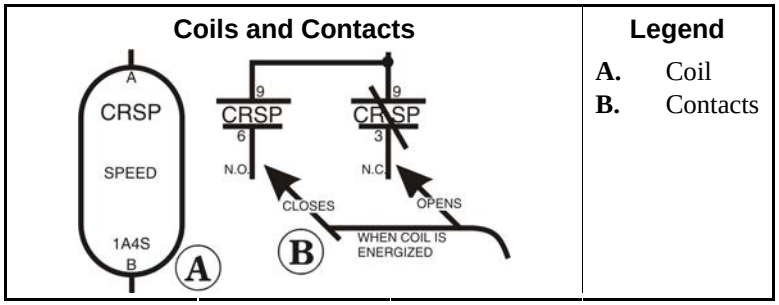

CP=Control, Photo-Eye (Figure 5)—Photo-eyes sense the presence of an object without direct physical contact. Photo-eyes consist of a transmitter, receiver, and output module. These components may be housed in one assembly with the transmitter bouncing light off of a reflector to the receiver, or these components can be housed in two separate assemblies with the transmitter pointed directly at the receiver. The photo-eye can be set to turn on its output either when the light beam becomes blocked (dark operate) or when it becomes un-blocked (light operate).

Figure 5: Photo-eye (CP)

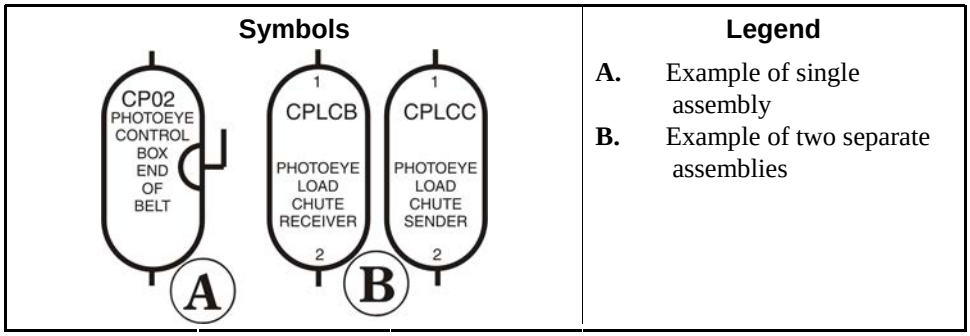

CS=Control, Contactor/Motor Starter (Figure 6)—A relay capable of handling heavier electrical loads, usually a motor.

Figure 6: Other Control Symbols

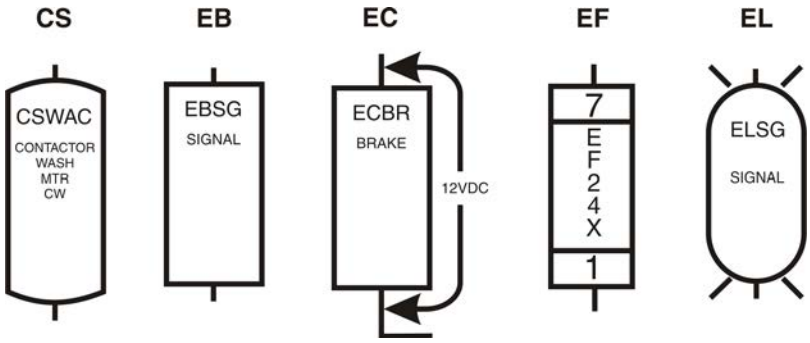

EB=Electric Buzzer (Figure 6)—An audible signaling device.

EC=Electric Clutch (Figure 6)—A clutch consists of a coil and a rotor. The rotor has two separate rotating plates. These plates are free to rotate independent of each other until the coil is energized. Once energized the two plates turn as one.

ED=Electronic Display—A visual presentation of data, such as an LCD (liquid crystal display), LED (light emitting diode) display, or VFD (vacuum florescent display).

EF=Electric Fuse (Figure 6)—A fuse is an over-current safety device with a circuit opening fusible member which is heated and severed by the passage of over-current through it.

EL=Electric Light (Figure 6)—Indicator lights may be either incandescent or fluorescent.

EM=Electro Magnet Solenoid—A device consisting of a core surrounded by a wire coil through which an electric current is passed. While current is flowing, iron is attracted to the core (e.g., a pinch tube drain valve solenoid).

ES=Electronic Power Supply—A device that converts AC (alternating current) to filtered and regulated DC (direct current). The input voltage to the power supply is usually 120 or 240 VAC. The output is +5, +12, and -12 VDC.

ET=Thermal Overload (Figure 7)—A safety device designed to protect a motor. A thermal overload consists of an overload block, heaters, and an auxiliary contact. The auxiliary contact is normally installed in a safety (three-wire) circuit that stops power to the motor contactor coil when a motor overload occurs.

Figure 7: Thermal Overload (ET)

Schematic Symbol	Legend
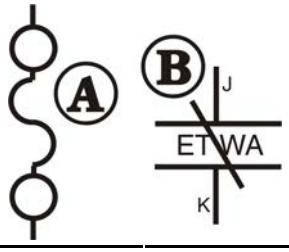	**A.** Heater (one per phase) **B.** Overload relay; contacts open if overload condition exists

EX=Electrical Transformer (Figure 8)—A device that transfers electrical energy from one isolated circuit to another, often raising or lowering the voltage in the process.

KB=Keyboard—Device similar to a typewriter for making entries to a computer.

MN=Electronic Monitor (CRT)—A cathode ray tube used for visual presentation of data.

MR=Motors (Figure 9)—Electromechanical device that converts electrical energy into mechanical energy.

Figure 8: Transformer (EX)

Figure 9: Electric Motor (MR)

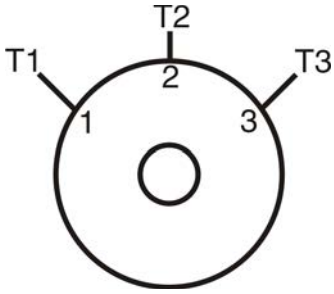

MV=Motor (Variable Speed) Inverter—To vary the speed of an AC motor, the volts to frequency ratio must be kept constant. The motor will overheat if this ratio is not maintained. The motor variable speed inverter converts three phase AC to DC. The inverter then uses this DC voltage to generate AC at the proper voltage and frequency for the commanded speed.

Note 2: Switch symbols used in the schematics and described below always depict the switch in its un-actuated state.

PX=Proximity Switch (Figure 10)—A device which reacts to the proximity of an target without physical contact or connection. The actuator or target causes a change in the inductance of the proximity switch which causes the switch to operate. Proximity switches can be two-wire (AC) or three-wire (DC) devices.

Figure 10: Proximity Switches (PX)

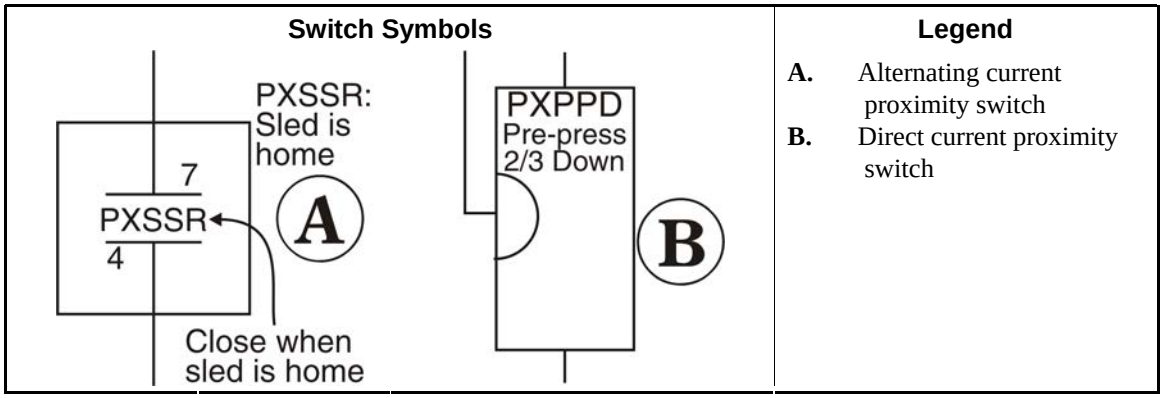

SC=Switch, Cam Operated (Figure 11)—A switch in which the electrical contacts are opened and/or closed by the mechanical action of a cam(s). Applications include 35-50 pound timer operated machines, Autospot, timer reversing motor assembly, and some balancing systems.

SH=Switch, Hand Operated (Figure 12)—A switch that is manually operated (e.g., *Start button*, *Master switch*, etc.).

Figure 11: Cam Switch (SC)

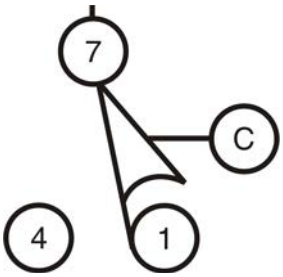

Figure 12: Hand Operated Switch (SH)

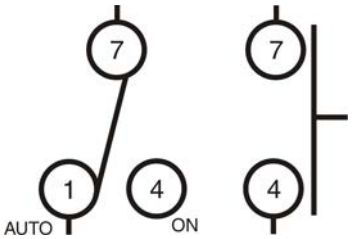

SK=Switch, Key Lock (Figure 13)—A switch that requires a key to operate. This prevents unauthorized personnel from gaining access to certain functions (e.g., the *Program menu*).

SL=Switch, Level Operated (Figure 14)—A switch connected to a float that causes the switch to open and close as the level changes.

Figure 13: Key Switch (SK)

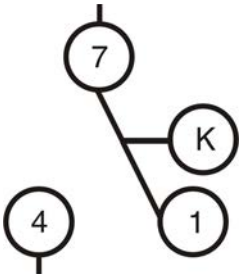

Figure 14: Level Switch (SL)

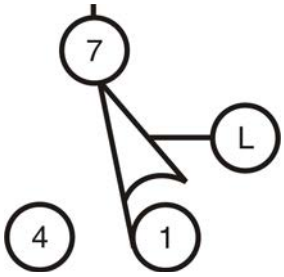

SM=Switch, Mechanically Operated (Figure 15)—A switch that is mechanically operated by a part of or the motion of the machine (e.g., door closed switch, tilt limit switches, etc.)

SP=Switch, Pressure Operated (Figure 16)—A switch in which a diaphragm presses against a switch actuator.

Figure 15: Mechanical Switch (SM)

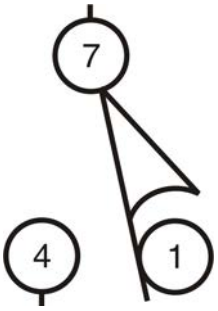

Figure 16: Pressure Switch (SP)

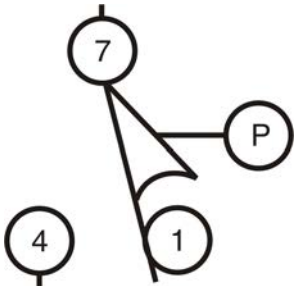

ST=Switch, Temperature Operated (Figure 17)—A switch that is actuated at a preset temperature (e.g., dryer safety probes) or has adjustable set points (e.g., Motometers or Combistats).

TB=Terminal Board (Figure 18)—A strip or block for attaching or terminating wires.

Figure 17: Temperature Switch (ST)

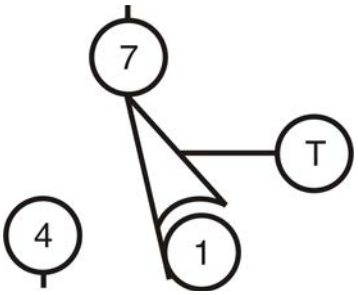

Figure 18: Terminal Board (TB)

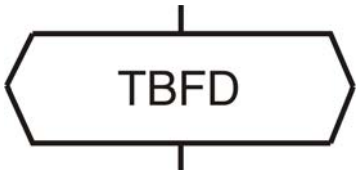

VE=Valve, Electric Operated (Figure 19)—A valve operated by an electric coil to control the flow of fluid. The fluid can be air, water or hydraulic.

Figure 19: Electrically Operated Valve (VE)

ZF=Rectifier (Figure 20)—A solid state device that converts alternating current to direct current.

Figure 20: Bridge Rectifier (ZF)

Component Symbol	Legend
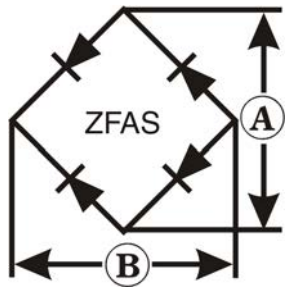	**A.** Alternating current input **B.** Direct current output

Figure 21: Bridge Rectifier

Component	Legend
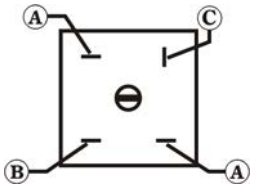	**A.** Alternating current in **B.** Negative direct current out **C.** Positive direct current out

WC=Wiring Connector—A coupling device for joining two cables or connecting a cable to an electronic circuit or piece of equipment. Connectors are male or female, according to whether they plug into or receive the mating connector.

2. Component Terminal Numbering

CAUTION 1: Risk of Mis-wiring—Due to electrical component manufacturing inconsistencies, the pin numbers imprinted on components such as connectors and relay bases used on Milnor machines often do not correspond to the pin numbers shown in the schematics.

- Ignore pin numbers imprinted on in-line connectors (e.g., Molex connectors) and relay bases.
- Use the pin identification illustrations herein to identify pins on these components.

Figure 22: Plug-in Relays

11-pin Relay with Grey Base

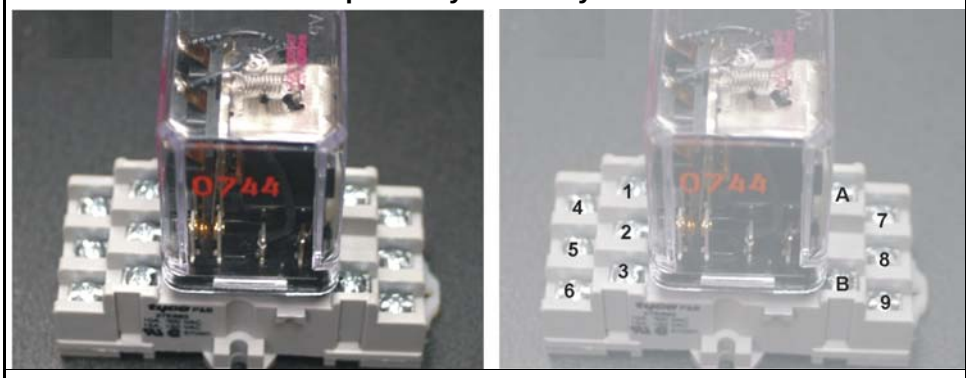

14-pin Relay with Grey Base (older)

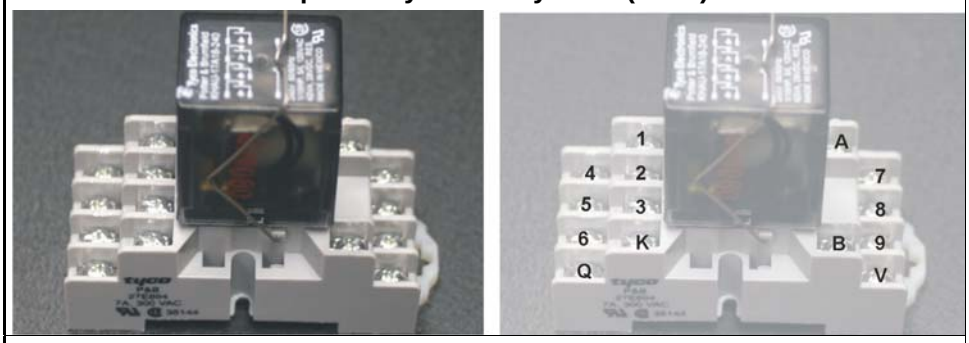

14-pin Relay with Black Base (newer)

14-pin Relay with Beige Base (rare)

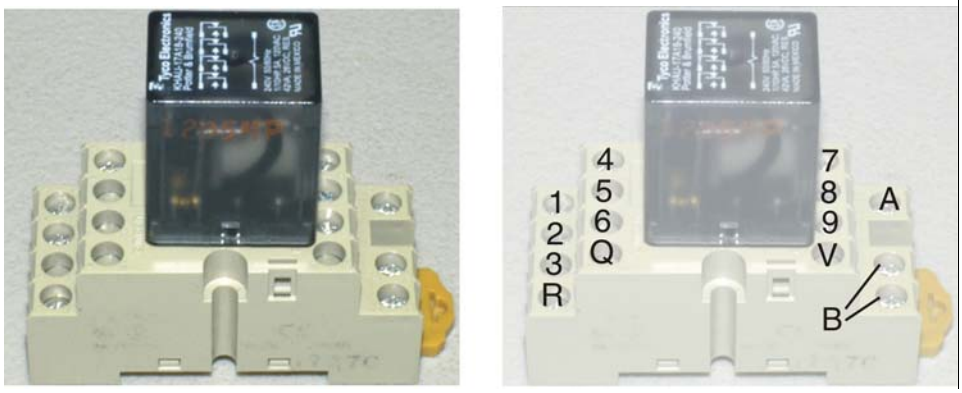

Legend

Left. View of relay and base

Right. Same view, showing pin numbers

Note 3: Relay functional names ending with the letter "M" (e.g., CRxxM) are not discrete components but are a component of a printed circuit board. They are usually not individually replaceable.

Figure 23: AMP Connector Pin Locations

36-pin Connector

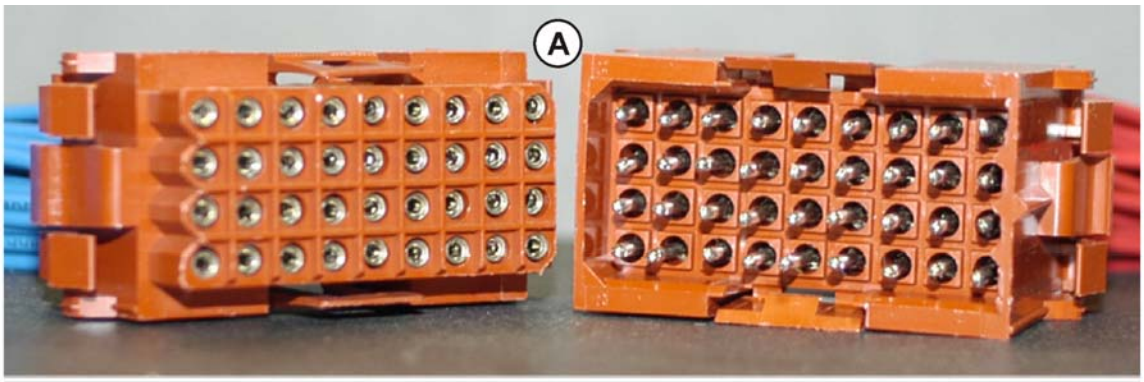

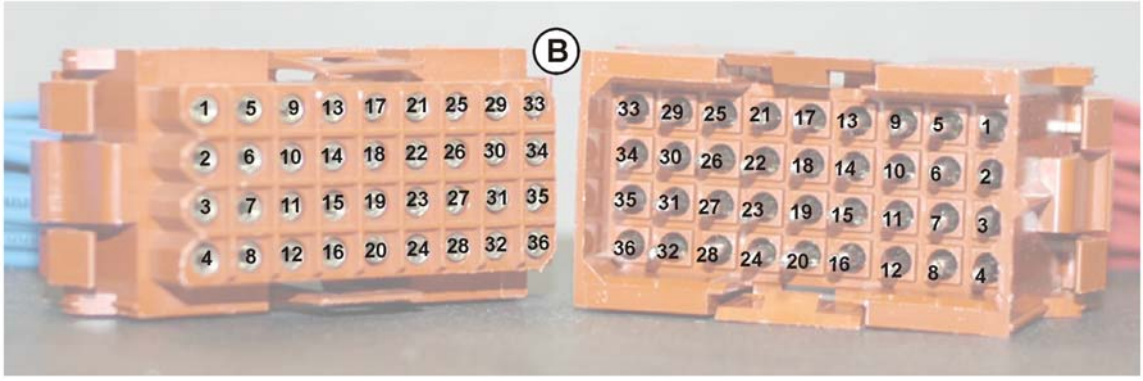

18-pin Connector

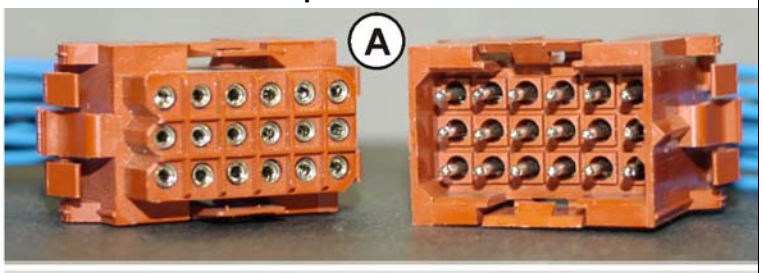

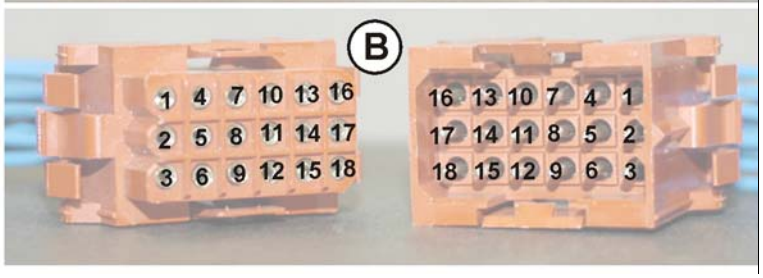

Legend

A. View of mating halves of connector
B. Same view, showing assigned pin numbers

Figure 24: Molex Connector Pin Locations

15-pin Connector

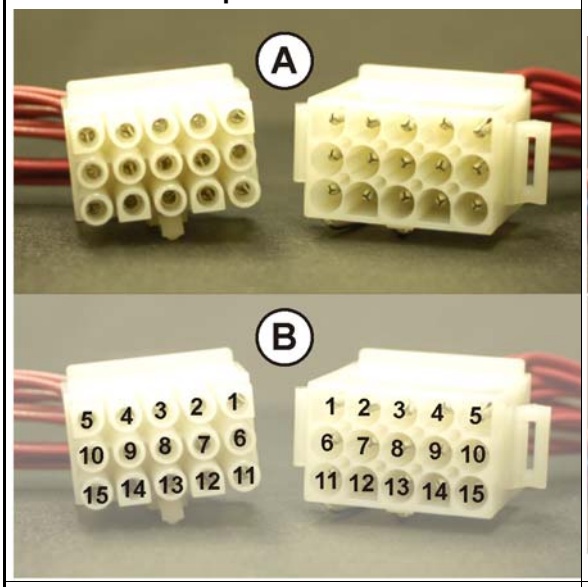

9-pin Connector

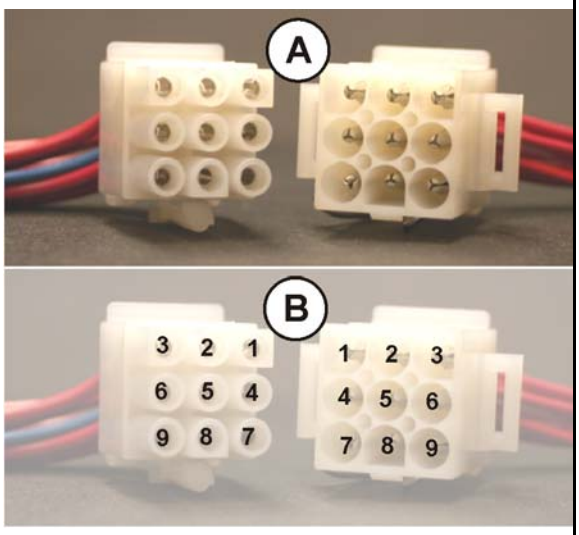

6-pin Connector

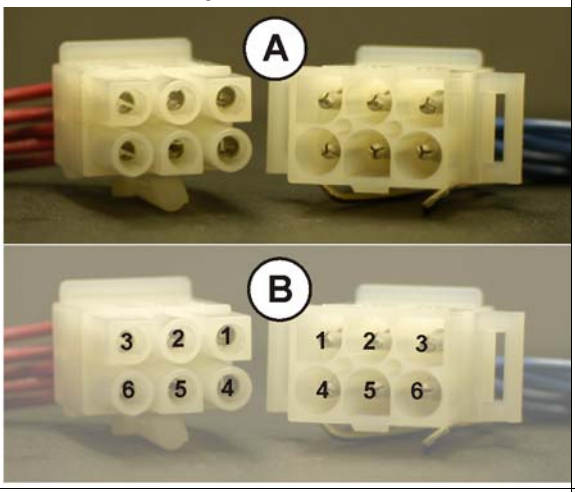

4-Pin Connector

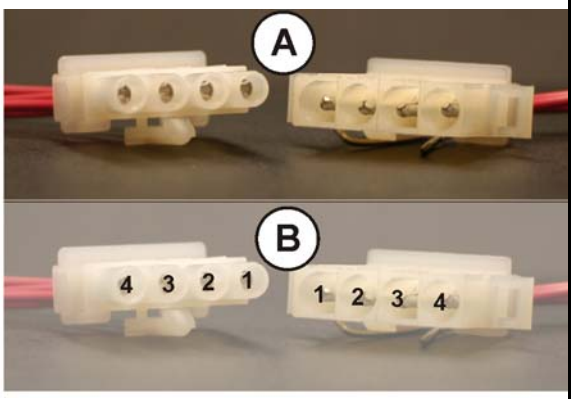

2-pin Connector

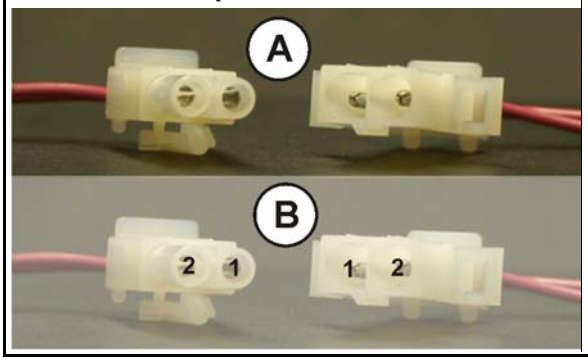

Legend

A. View of mating halves of connector
B. Same view, showing assigned pin numbers

Figure 25: Pressure Switch

Component	Legend
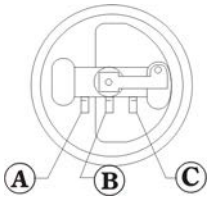	**A.** Contact 1—Normally open **B.** Contact 2—Normally closed **C.** Contact 3—Common

Figure 26: Toggle Switch

Component	Legend
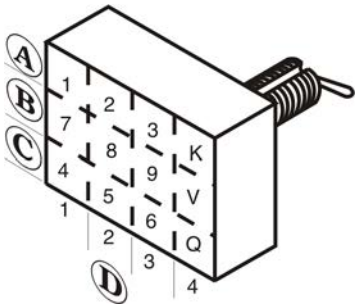	**A.** Normally closed contacts **B.** Common contacts **C.** Normally open contacts **D.** Pole

Figure 27: Switch with Replaceable Contact Blocks

Rotary or Push-button Switch Component	Legend
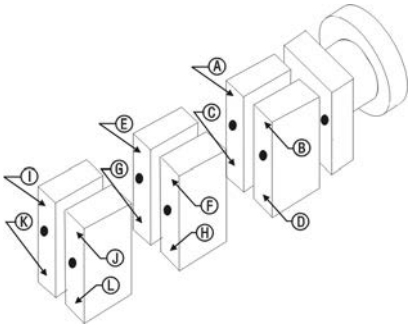	**A.** Terminal 7 **B.** Terminal 8 **C.** Terminal 4 if normally open; terminal 1 if normally closed **D.** Terminal 5 if normally open; terminal 2 if normally closed **E.** Terminal V **F.** Terminal 9 **G.** Terminal Q if normally open; terminal K if normally closed **H.** Terminal 6 if normally open; terminal 3 if normally closed **I.** Terminal W **J.** Terminal X **K.** Terminal R if normally open; terminal L if normally closed **L.** Terminal S if normally open; terminal M if normally closed

3. Features of Milnor® Electrical Schematic Diagrams

Document BMP010012 (following this section) is a sample schematic, based on a schematic diagram for the Milnor® gas dryer. For the purposes of this exercise, the schematic is shown gray and explanations of the items on the schematic are shown black.

The item numbers below correspond to the circled item numbers shown on the drawing.

1. The first six characters of the drawing number (W6DRYG) indicate that this is a wiring diagram (W), identify the generation of controls (6), and identify the type of machine (DRYG=Gas Dryer). These characters appear in the drawing number of every schematic in the set.

   The characters following the first six are unique to each drawing. The two characters identified as the page number are an abbreviation for the function performed by the depicted

circuitry (S+=three-wire circuit) and establish the order in which the schematic occurs in the manual (schematics are arranged in alpha-numeric order in the manual).

Whenever circuitry changes are significant enough to warrant publishing a new schematic drawing, the new drawing number will be the same as the old except for the major revision letter (A in the example).

2. Included in the drawing title are the class of control system, the title of this circuit, and the circuit voltage.
3. Line numbers are provided along the bottom edge of the drawing. These permit service personnel in the field and at the Milnor® factory to quickly relate circuit locations when discussing troubleshooting over the phone. Page and line numbers are referenced on the drawing as explained in items five and six below.
4. Relay contacts show the page and line number on which the relay coil may be found. This is the type of cross referencing most frequently used in troubleshooting.
5. Relay coils show the page and line number on which its associated contacts are located.
6. Relay contacts and relay coils show the physical location of the relay.
7. The designation MTA applies to electronic circuit board connections. Typically, a control system will contain several different types of circuit boards and one or more boards of each type. A numerical suffix identifies the board type and a numerical prefix identifies which one of several boards of a given type is being depicted. For example, the designation 1MTA5 identifies this as the first I/O board (8 output, 16 input board) in the control system. As shown on the drawing, a pin number follows the board number, separated by a dash. Thus, 1MTA5-9 is pin 9 on this board. The numerical designations for board types vary from one control system to another. Some of the board types commonly encountered on the Mark V and Mark VI washer-extractor control and their designations are as follows:
   - MTM1-MTM8 = Mother board
   - MTA1-MTA5 = 8 output, 16 input (8/16) boards
   - MTA11-MTA14 = 24 output boards
   - MTA30-MTA40 = processor boards
   - MTA41-MTA43 = digital to analog (D/A) boards
   - MTA51-MTA55 = analog to digital (A/D) boards
   - MTA81-MTA85 = balance A-D board

   The complete listing of the boards utilized in a given control system can be found in the component list for that system.
8. Wire numbers, as described earlier in this section, are shown at appropriate locations on the schematic drawing.
9. Where diamond symbols appear at the end of a conductor, these are match points for continuing the schematic on another drawing. The page and line number that continues the circuit is printed adjacent to the diamond symbol. Where more than one match point appears on the referenced page, match diamonds containing corresponding letters.

— End of BIUUUK01 —

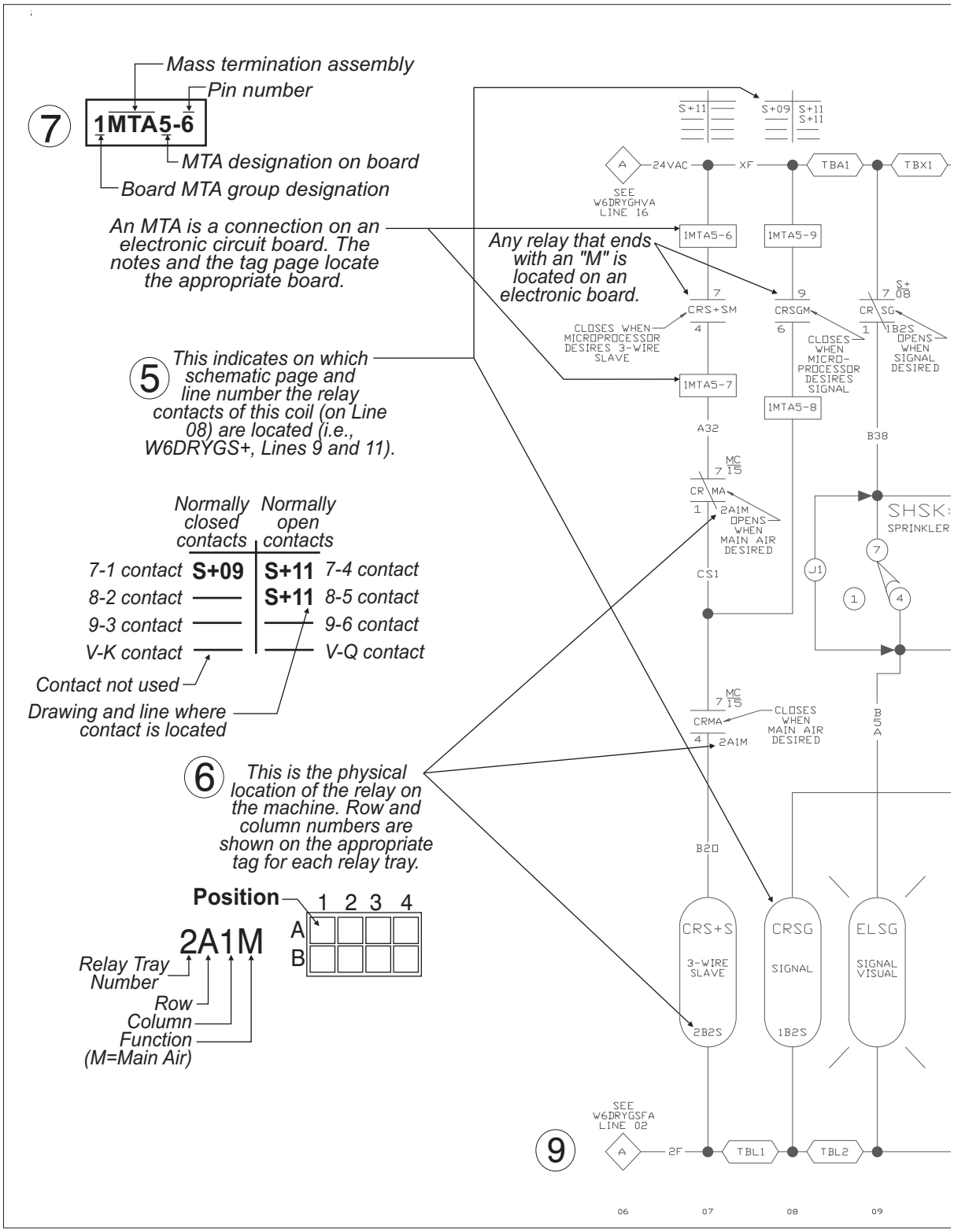

BMP010012 (left) / 2018343

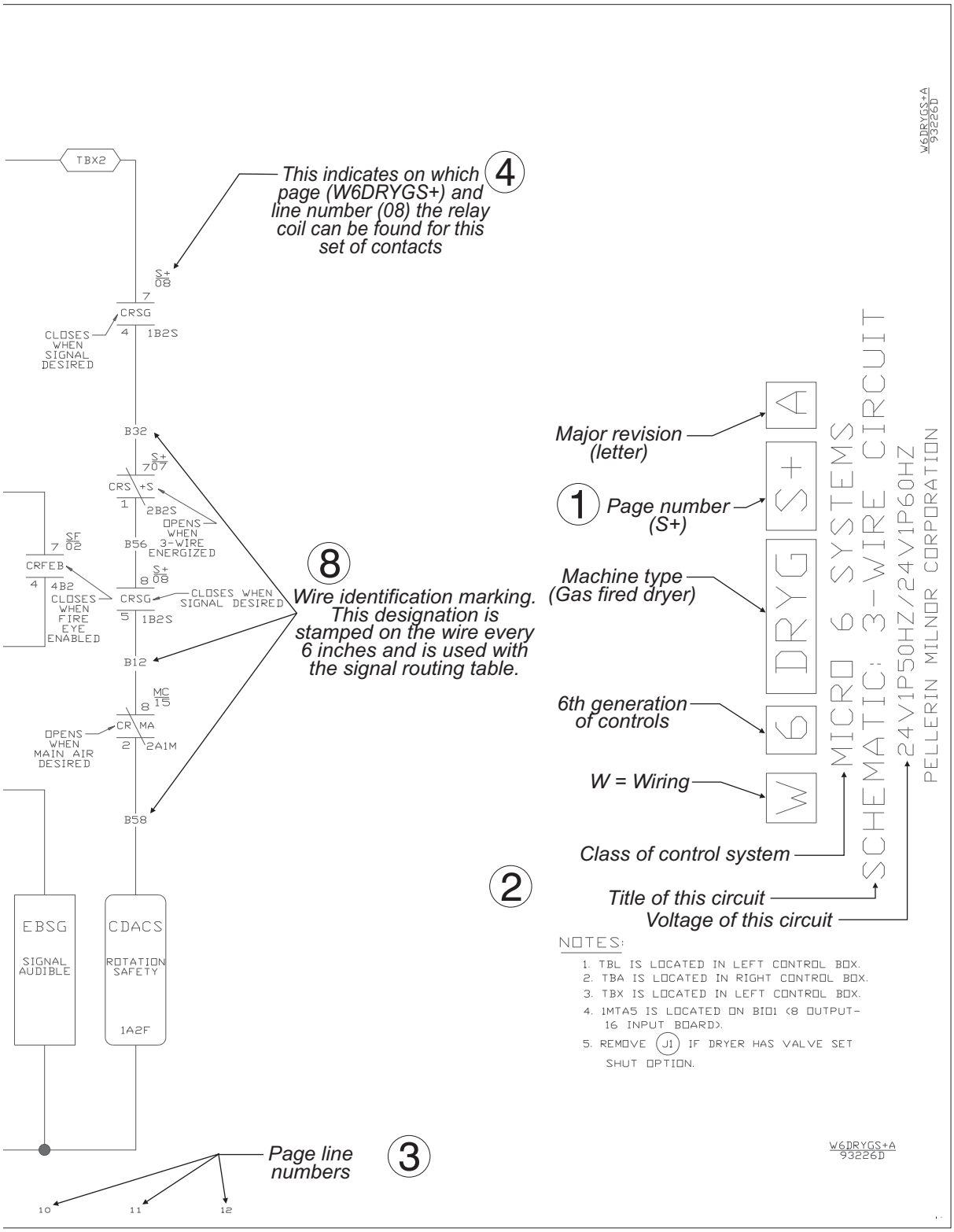

BMP010012 (right) / 2018343

FIGURE	ELECTRICAL VALUES	SUFFIXES									
		B		H		M		T		U	
		50HZ	60HZ	50HZ	60HZ	50HZ	60HZ	50HZ	60HZ	50HZ	60HZ
A	1.000	208	230			200	220	220	240	200-220	208-240
B	$\sqrt{3}$				208	346	380	380		346-380	380
C	2.000	416	460	220	240	400	440	440	480	400-440	440-480
D	$1+\sqrt{3}$						600				600
E	$2\sqrt{3}$			380							

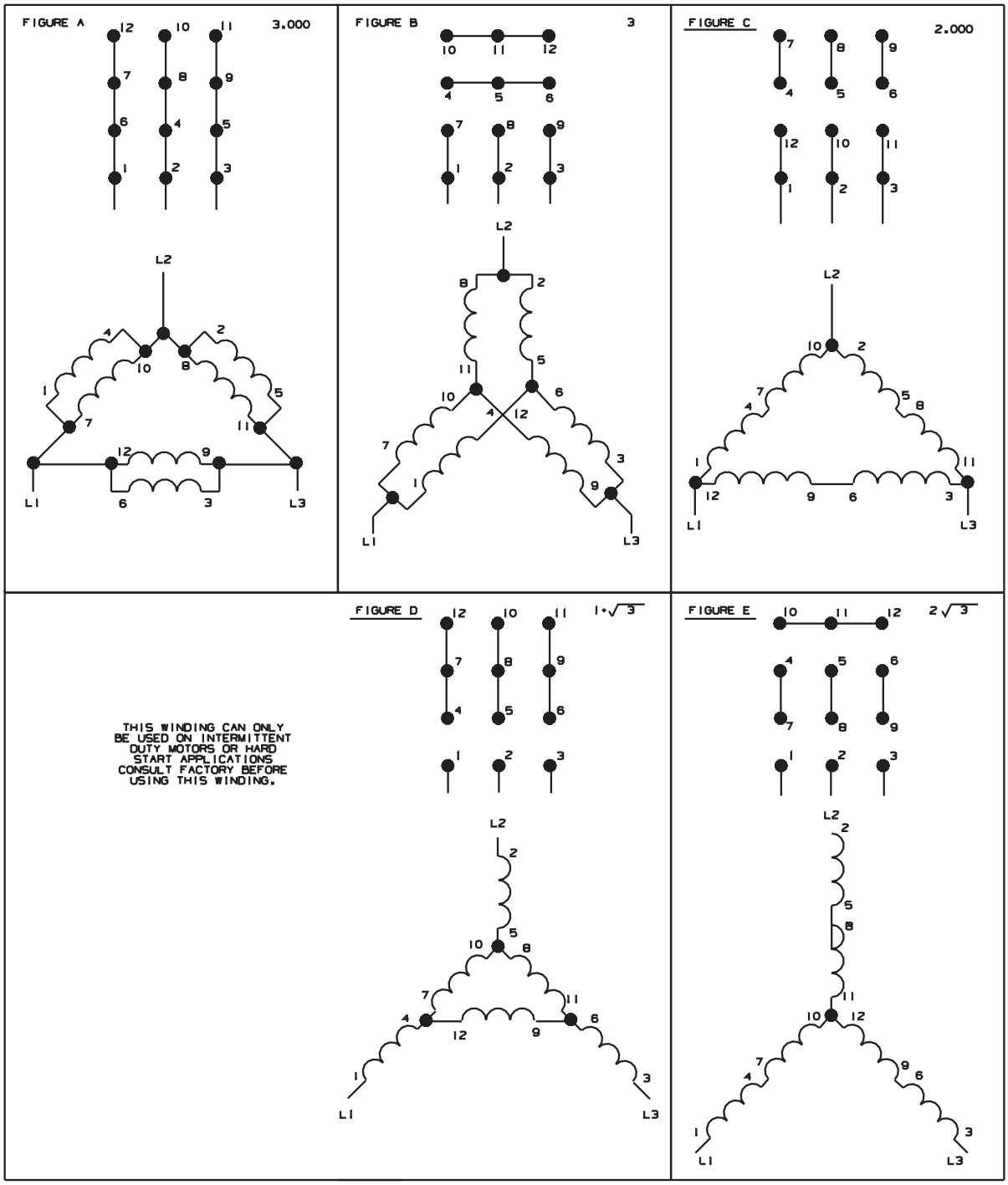

06 07 08 09 10 11 12 13 14 15 16 17

BMP850029

MOTOR CONNECTION DIAGRAMS

THREE PHASE SINGLE SPEED MOTORS WITH MULTIPLE VOLTAGE RATINGS

(ONLY FOR MOTOR SUFFIXES LISTED)

PELLERIN MILNOR CORPORATION

BMP850029
993628

BMP850029
993628

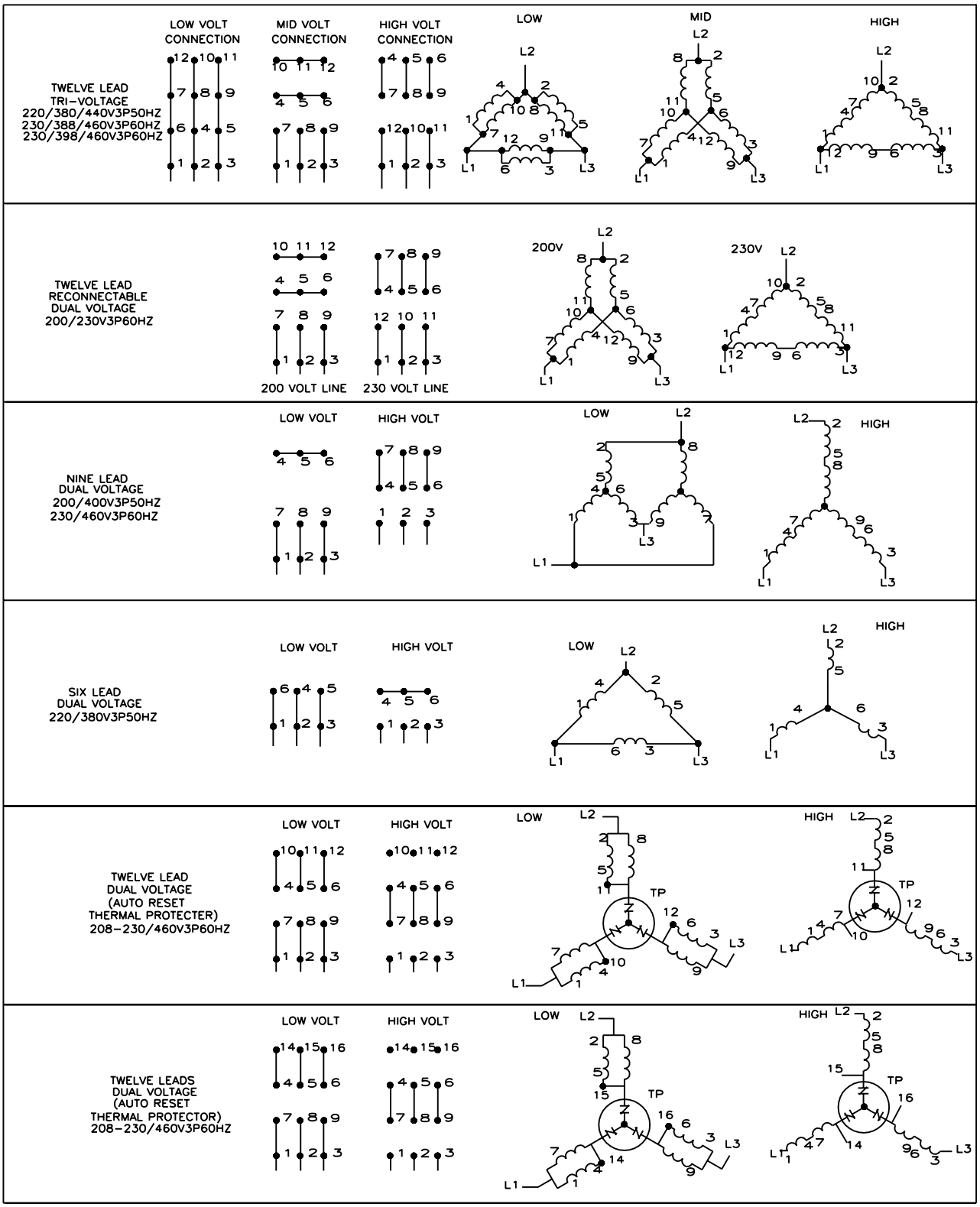

W80008

THREE PHASE
MOTOR CONNECTION DIAGRAMS
SINGLE SPEED MOTORS WITH MULTIPLE VOLTAGE RATINGS

PELLERIN MILNOR CORPORATION

W80008
2001253A

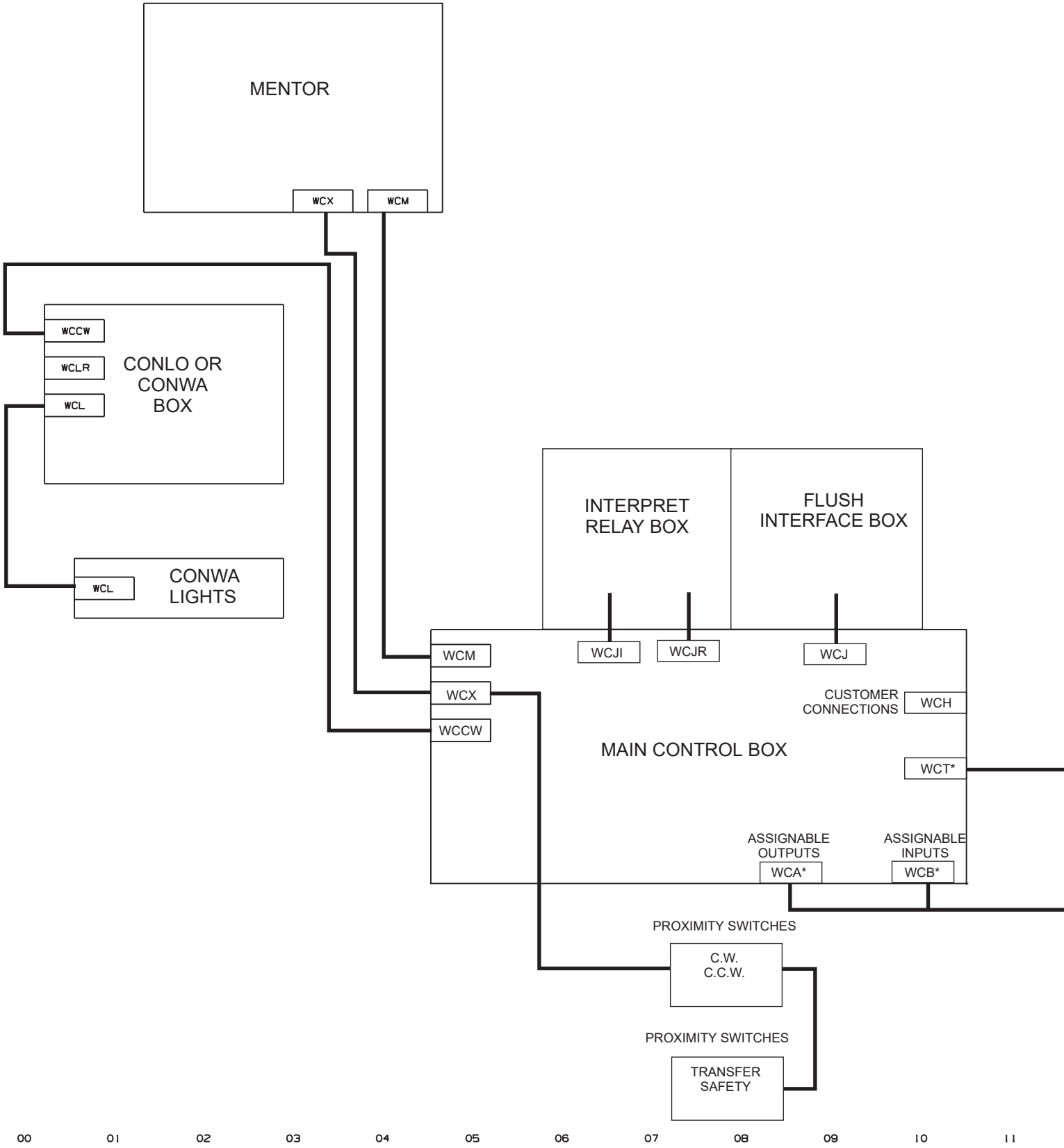

W9CBW3CC
99133B

W9CBW3CC
99133B

MAIN CONTROL BOX

WCA* OUTPUTS
WCB* INPUTS
WCT* TEMPERATURE PROBES
WCM MENTOR
WCX FEED THRU FOR PROX SW.
WCH CUSTOMER CONNECTIONS
WCCW CONLO/CONWA CONNECTIONS
WCJ FLUSH INTERFACE BOX
WCIR INTERPRET RELAYS I1-I16
WCJR INTERPRET RELAYS J1-J16

MENTOR

WCX PROXIMITY SWITCHES
WCM MENTOR

WASH ZONE AND RINSE ZONE

WCW CONNECTIONS FOR WASH ZONE INTERFACE
WCL LEVEL SWITCHES

W9CBW3CC
G3 CBW SYSTEM MARK 9
SCHEMATIC: CABLE ROUTINGS
PELLERIN MILNOR CORPORATION

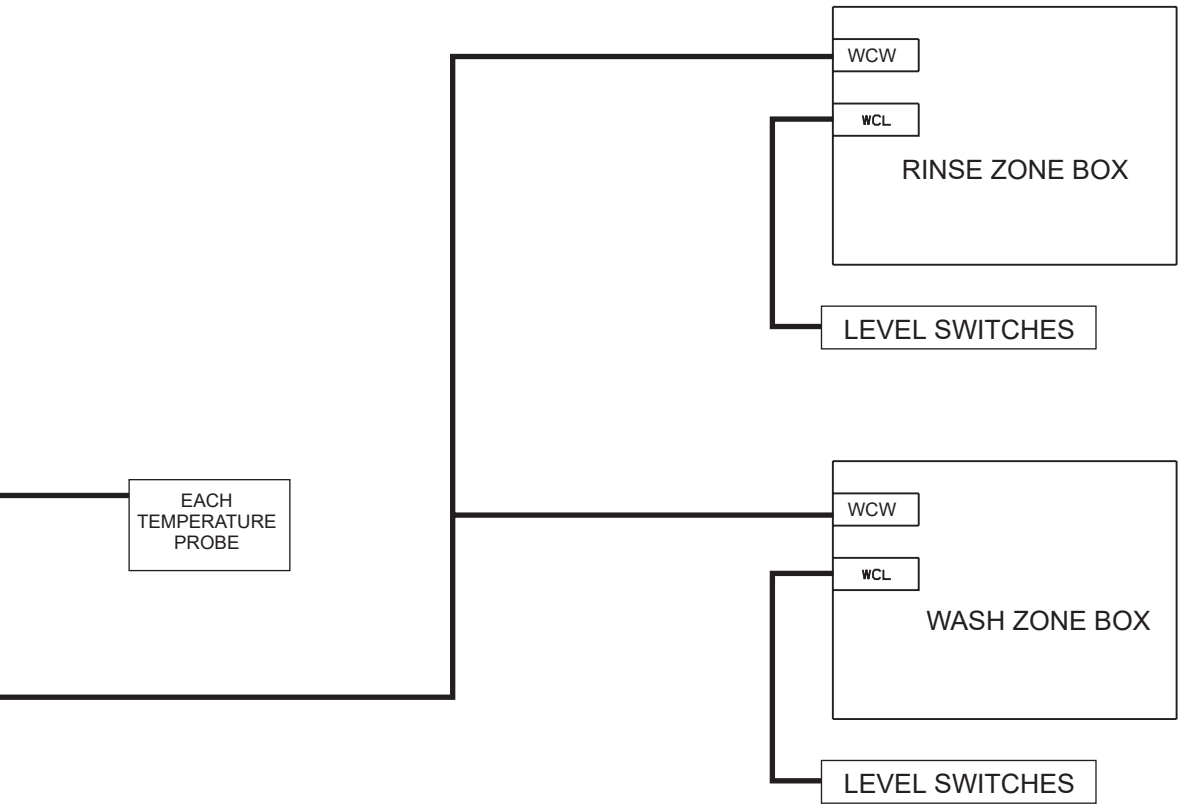

12 13 14 15 16 17 18 19

W9CBW3CC
99133B

NOTES FOR INSTALLING EPROM:
1.EPROMS MUST BE INSTALLED IN THE CORRECT SOCKET FOR THE MACHINE TO OPERATE. FOR THIS MACHINE THERE WILL BE ONE EPROM AND IT MUST BE INSTALLED IN THE SOCKET LABELED IC2.
2. MAKE SURE THAT ALL PINS ARE IN THEIR HOLES WHEN INSERTING (BE CAREFUL NOT TO BEND PINS UNDER CHIP.)

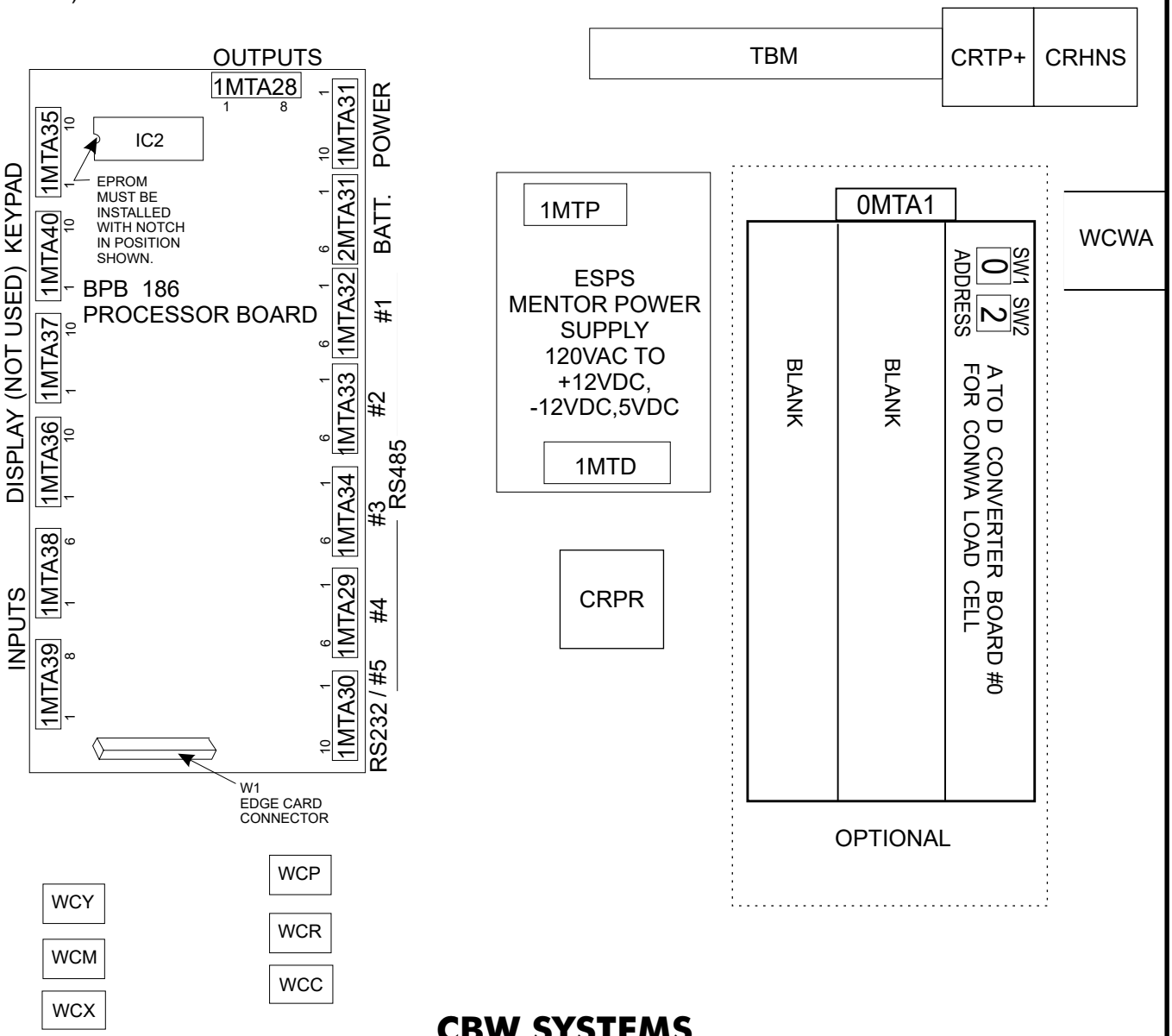

CBW SYSTEMS
MENTOR CONTROL PANEL

PELLERIN MILNOR CORPORATION

B2TAG99014
2009173A

W9CBW3TG1
2009173B

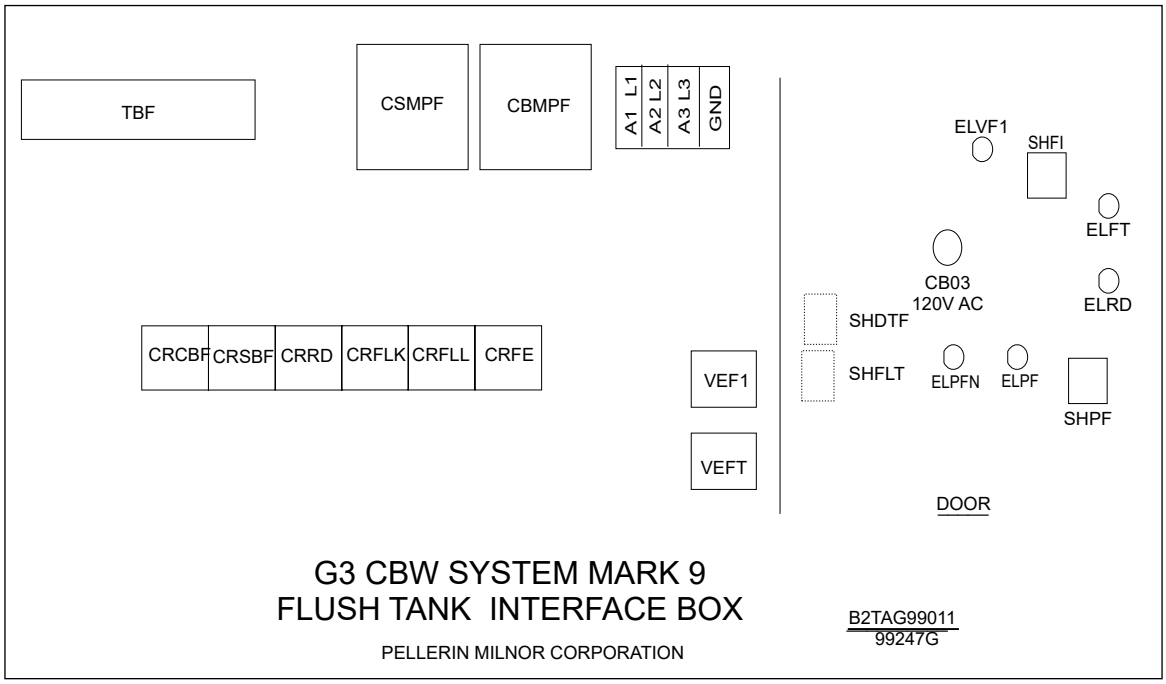

W9CBW3TG1

G3 CBW SYSTEM MARK 9 CONTROL BOX LAYOUTS FOR MENTOR, AND FLUSH INTERFACE BOX

PELLERIN MILNOR CORPORATION

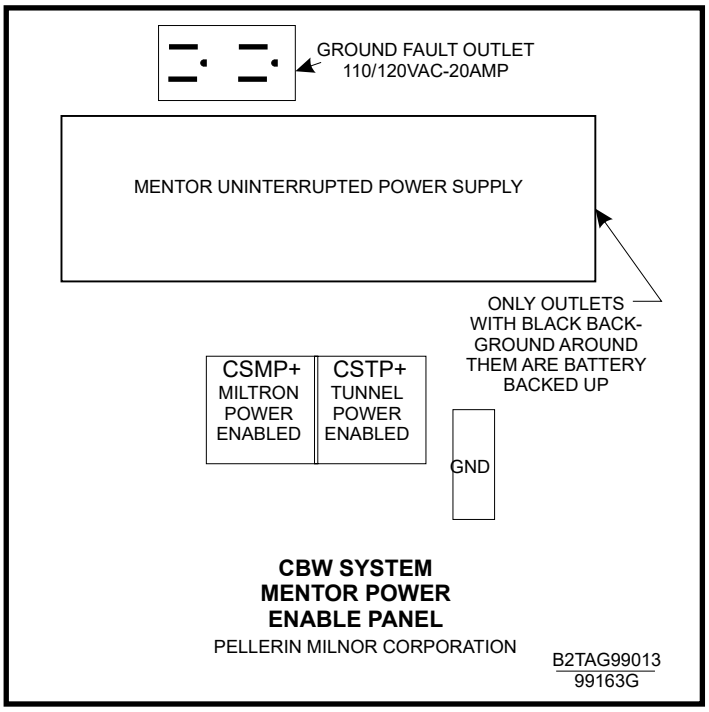

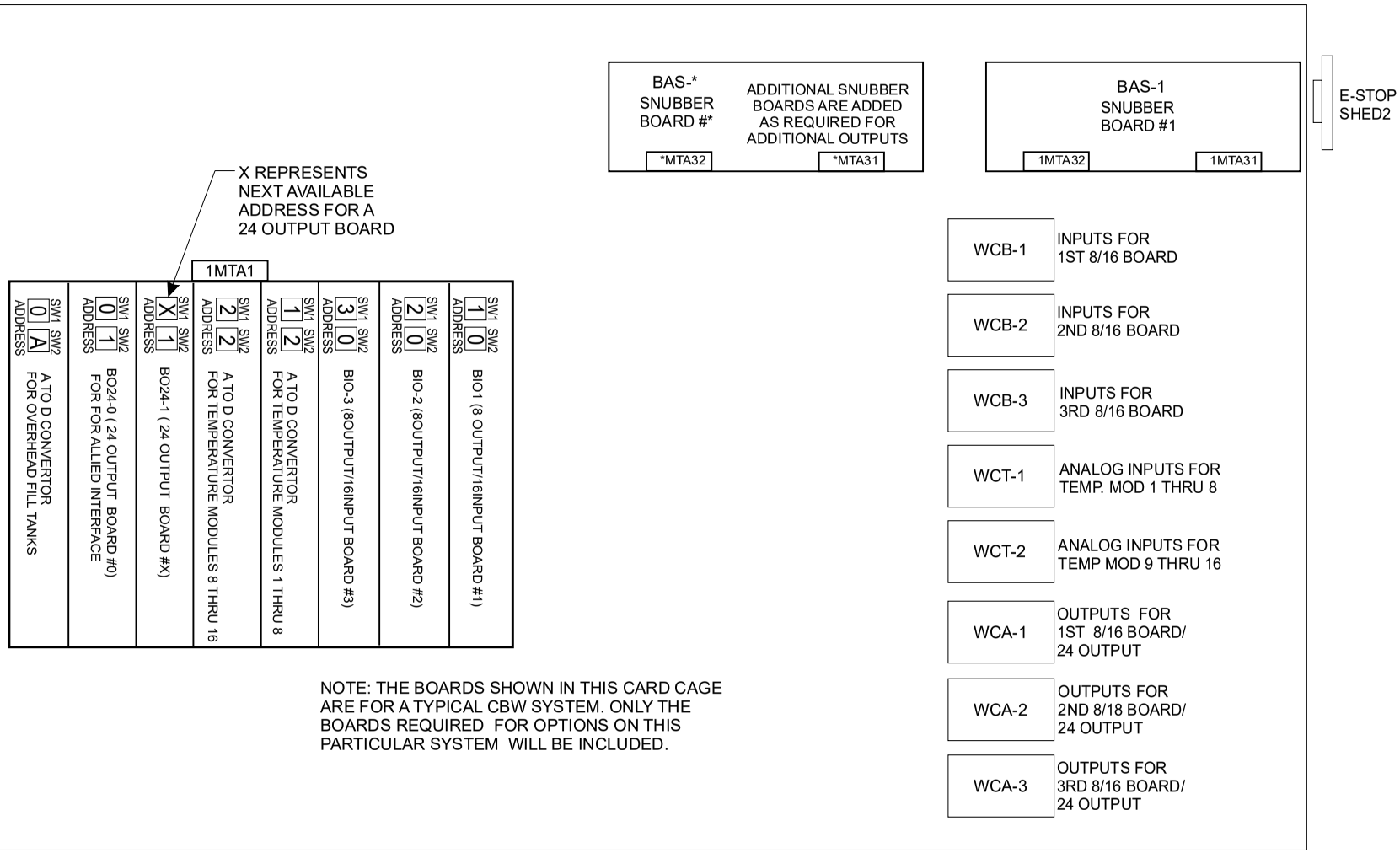

G3 CBW SYSTEM MARK 9
MAIN CONTROL BOX
RIGHT (MODULE) SECTION

PELLERIN MILNOR CORPORATION

B2TAG99017
2009173A

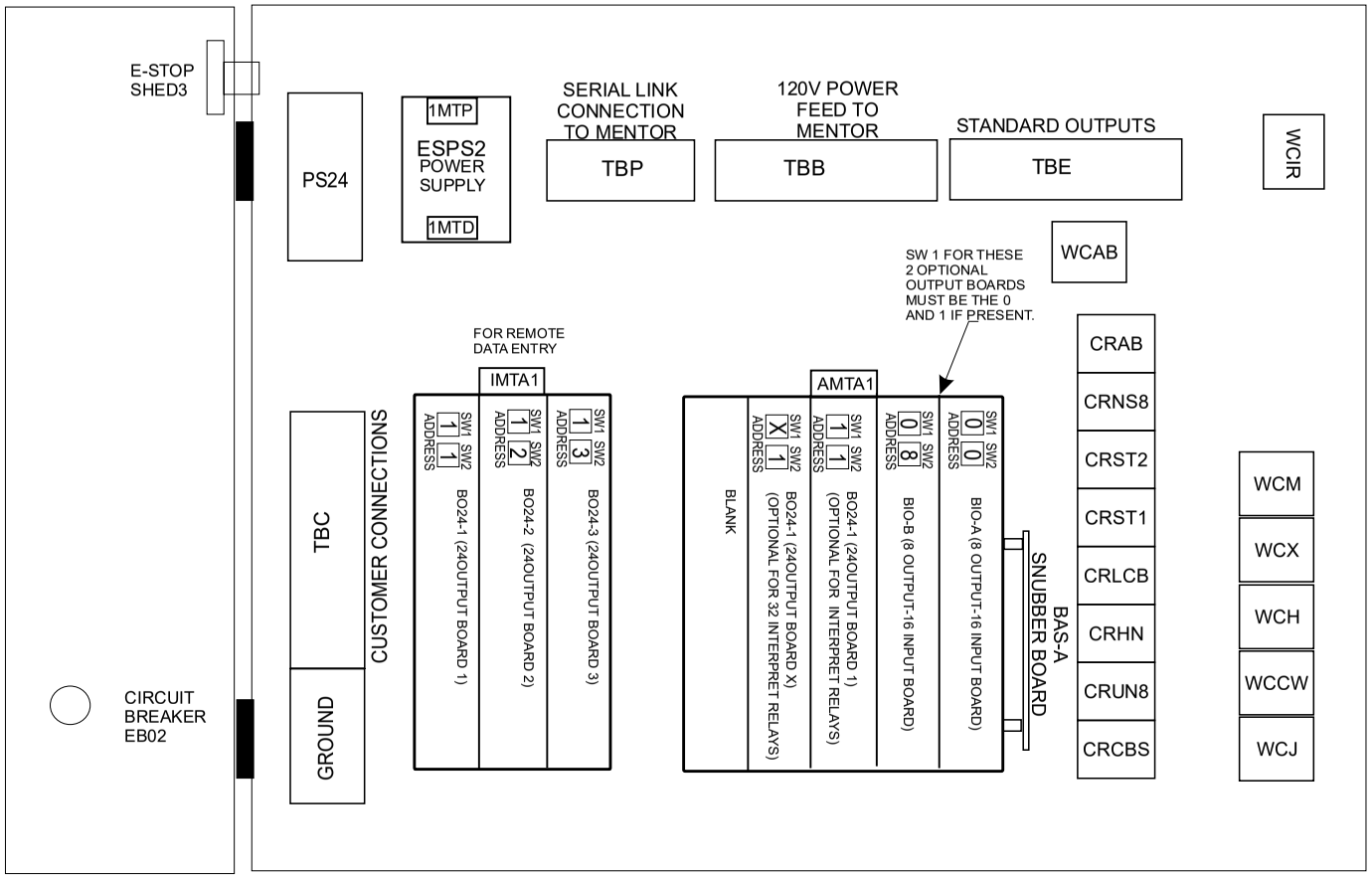

G3 CBW SYSTEM MARK 9
MAIN CONTROL BOX
LEFT (STD. OUTPUT) SECTION

B2TAG99018
2009173A

W9CBW3TG2

G3 CBW SYSTEM MARK 9
CONTROL BOX LAYOUTS
FOR MAIN CONTROL BOX

PELLERIN MILNOR CORPORATION

W9CBW3TG2
2009173B

W9CBW3TG2
2009173B

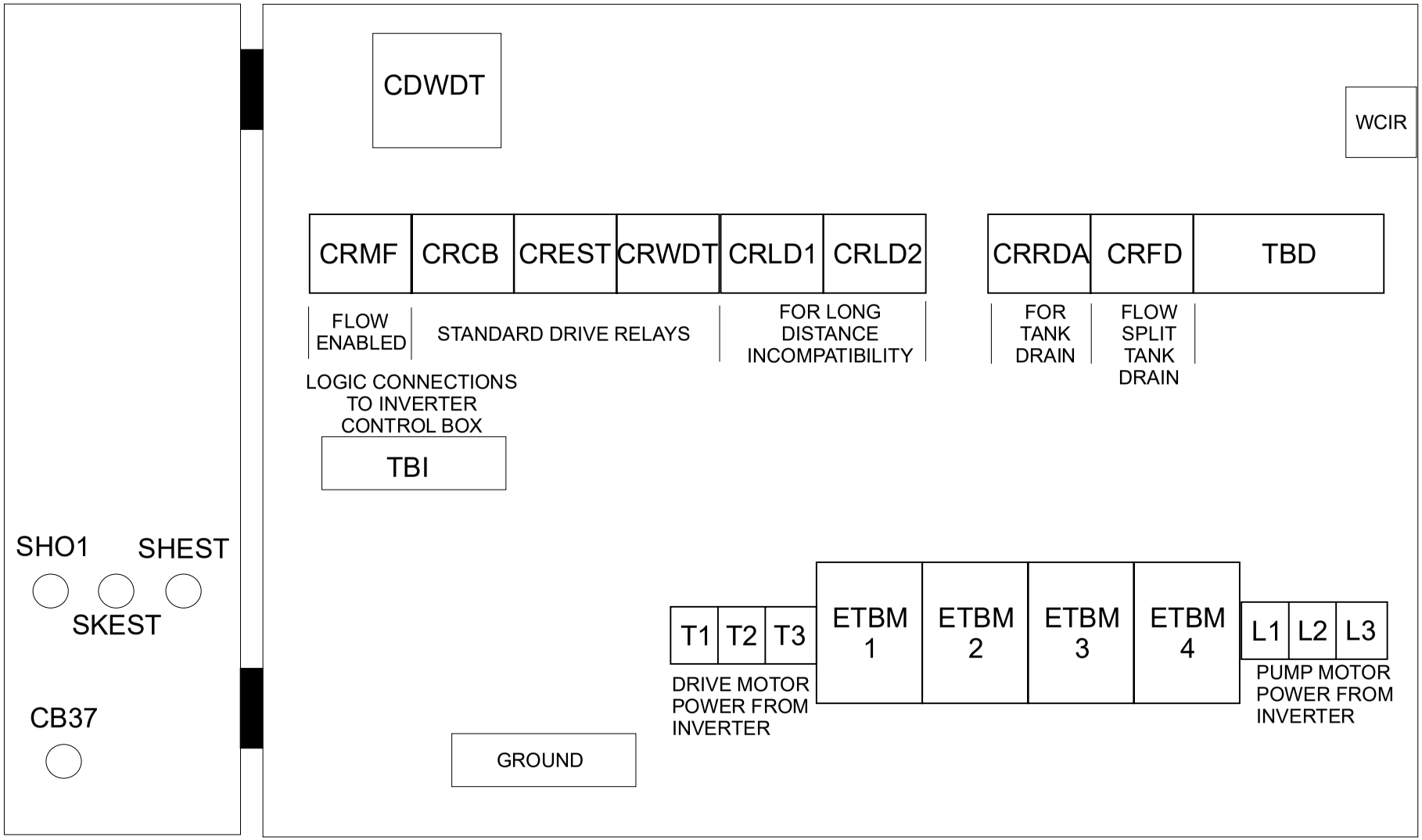

G3 CBW SYSTEM MARK 9
MAIN CONTROL BOX
MIDDLE (DRIVE) SECTION

PELLERIN MILNOR CORPORATION

B2TAG99009
2009173A

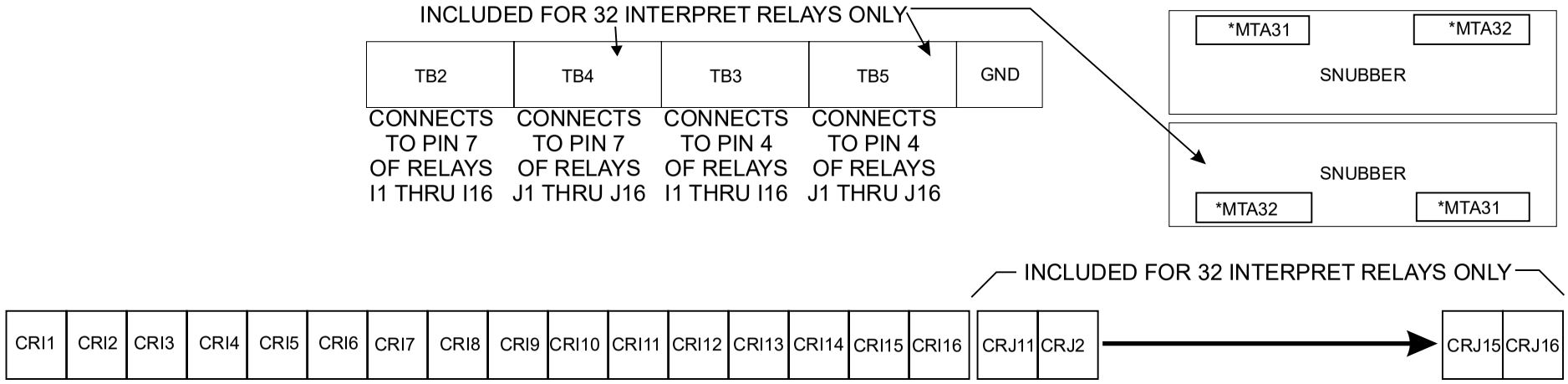

G3 CBW SYSTEM MARK 9
INTERPRET RELAY BOX
PELLERIN MILNOR CORPORATION

B2TAG99012
2006332G

W9CBW3TG3

G3 CBW SYSTEM MARK 9
CONTROL BOX LAYOUTS
FOR MAIN CONTROL AND INTERPRET RELAY BOX

PELLERIN MILNOR CORPORATION

W9CBW3TG3
2009173B

W9CBW3TG3
2009173B

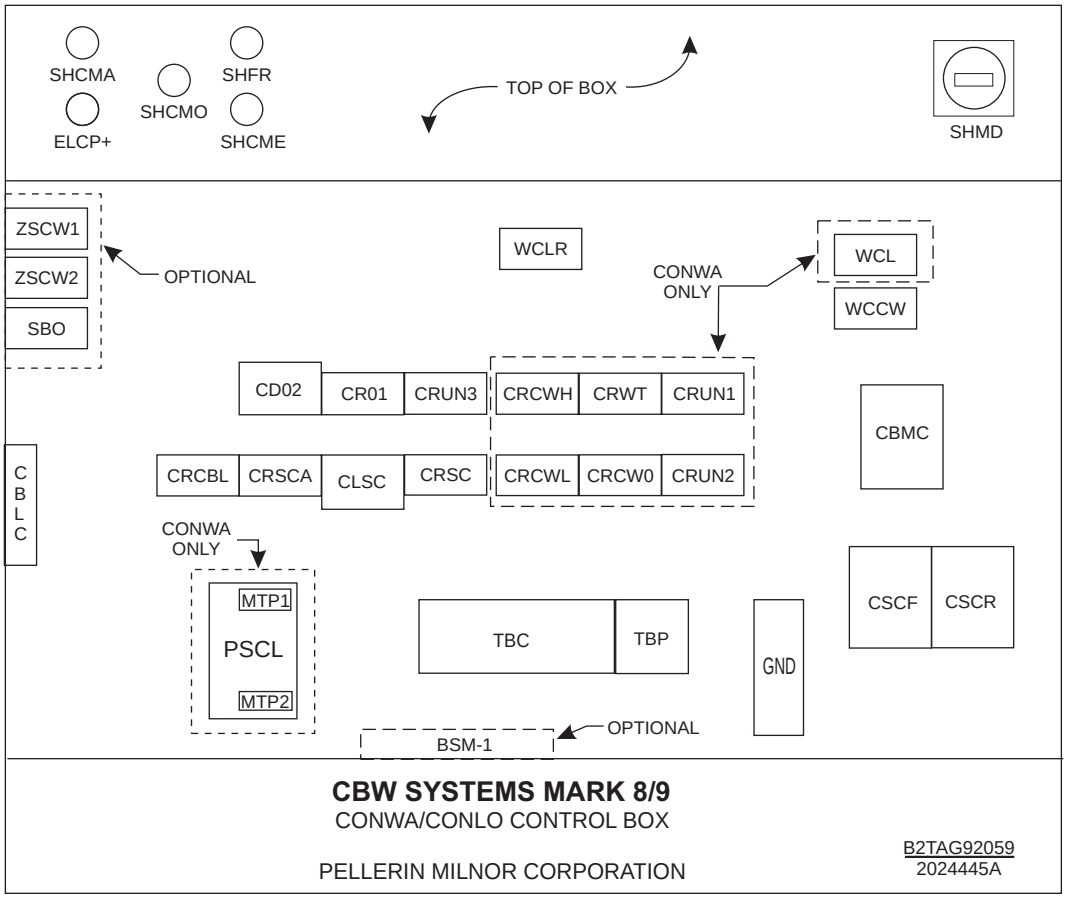

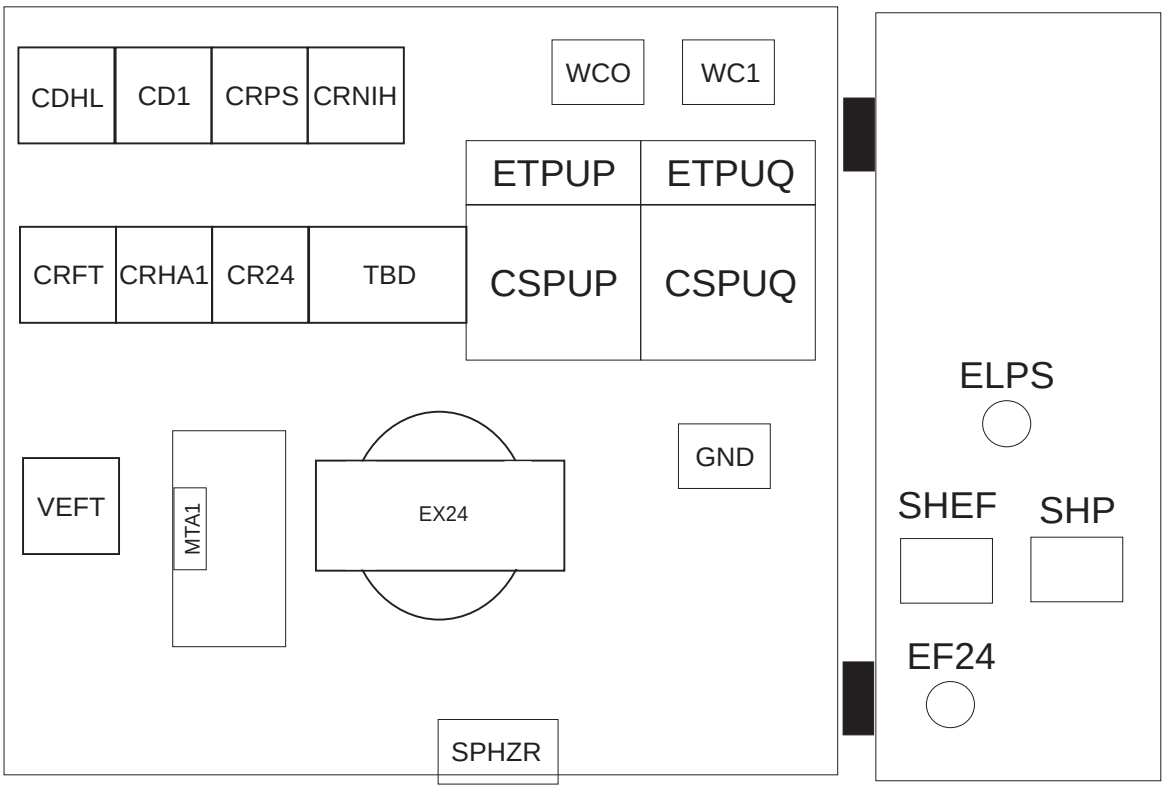

G3 CBW SYSTEM MARK 9 HOLDING TANK

PELLERIN MILNOR CORPORATION

B2T2003025
2008083G

W9CBW3TG4
2024445B

W9CBW3TG4

G3 CBW SYSTEM MARK 9 CONTROL BOX LAYOUTS FOR RINSE ZONE, WASH WATER FLOW LIFTER, AND CONWA/CONLO

PELLERIN MILNOR CORPORATION

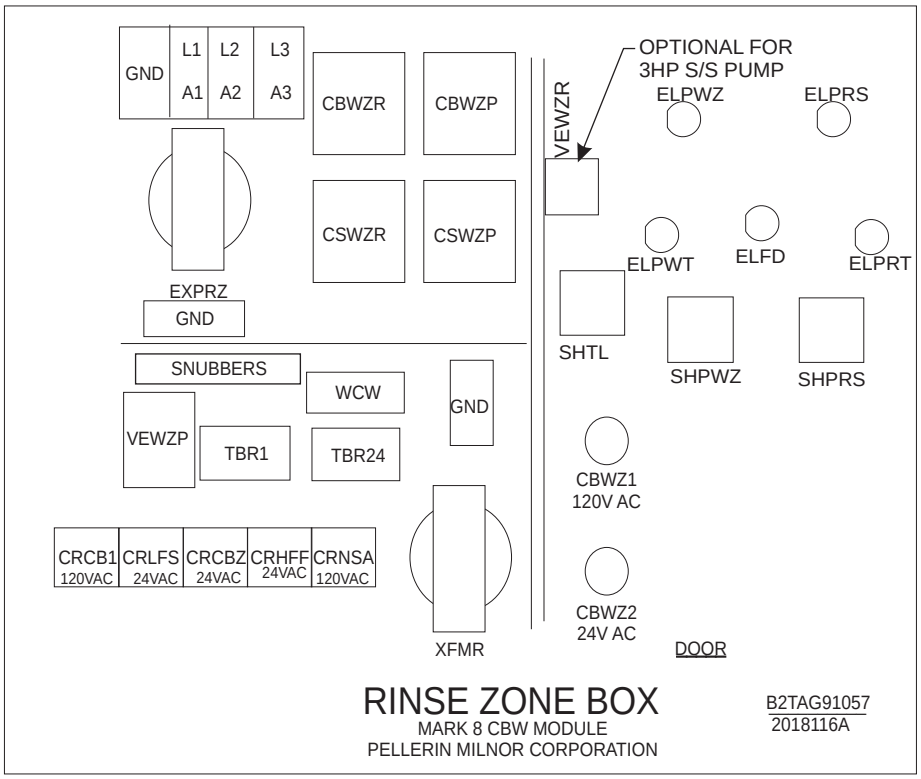

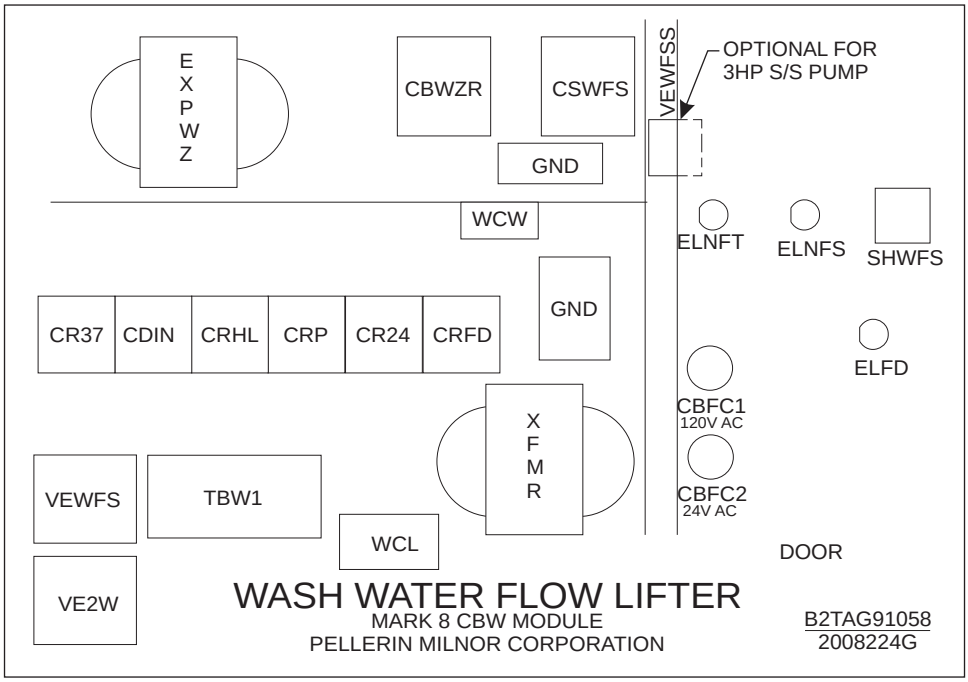

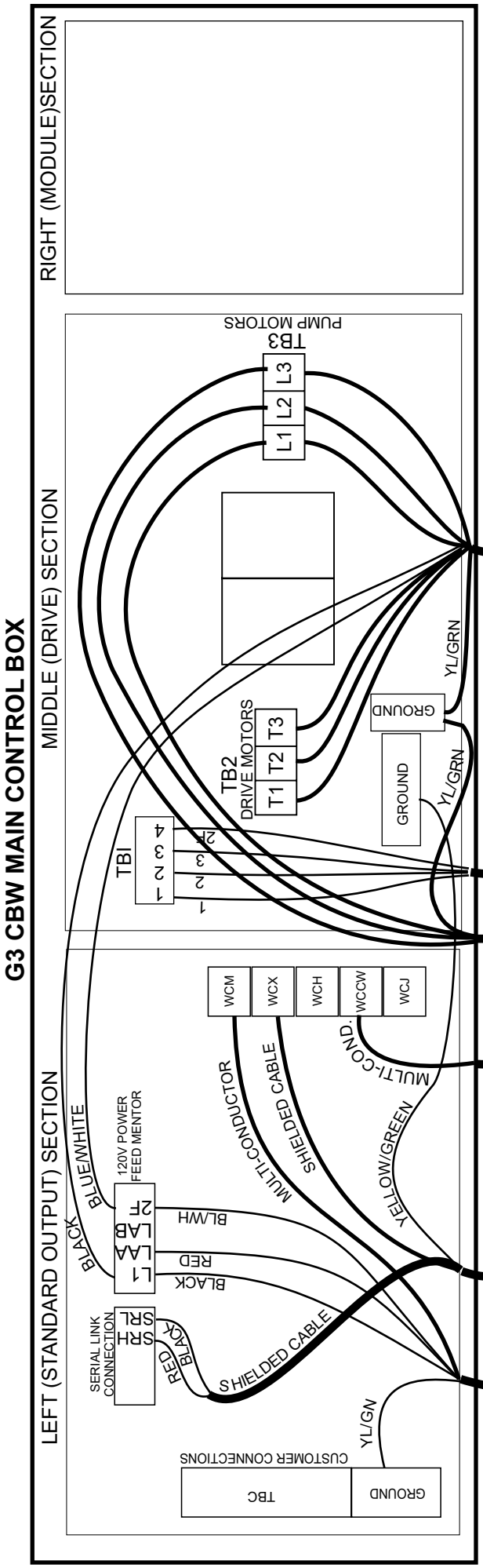

W9CBW3TG5
2002045B

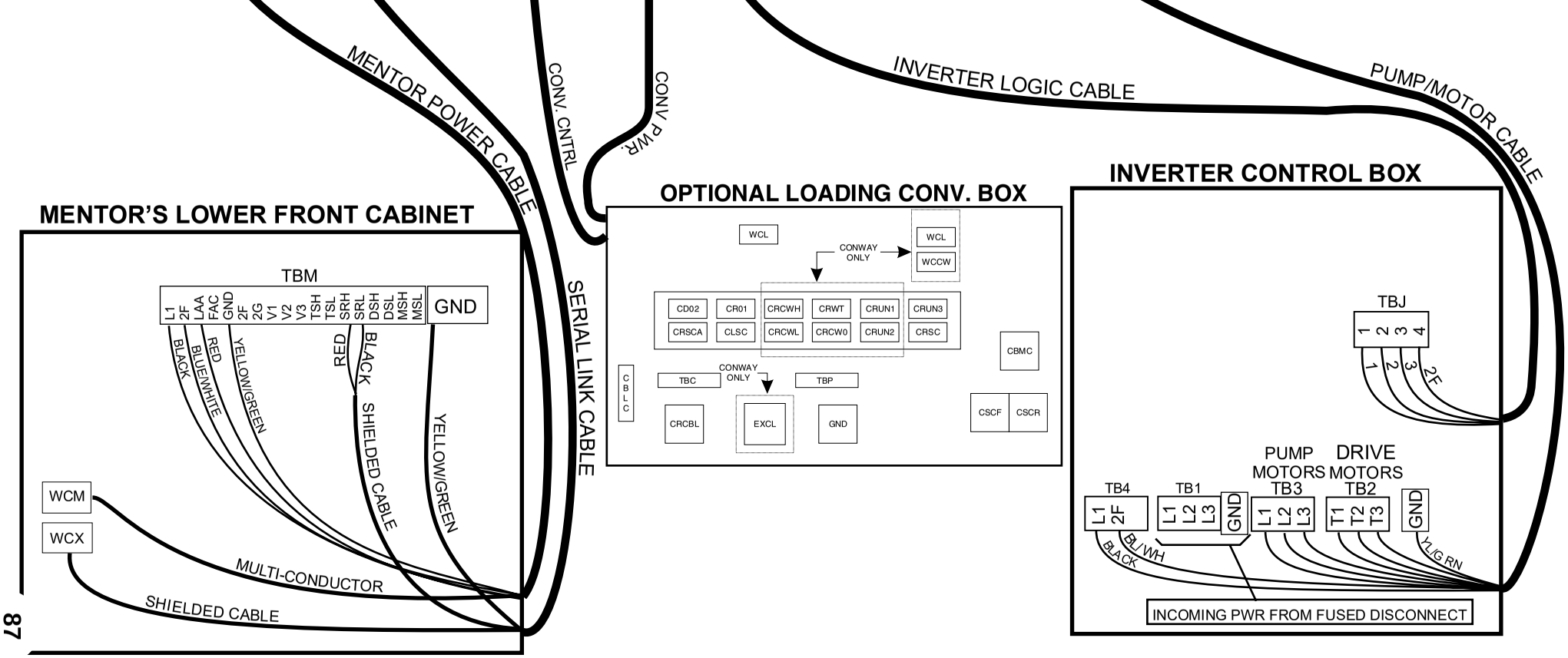

FIELD CONNECTIONS OF CABLES BETWEEN CBW AND REMOTE BOXES
MARK 9 SYSTEM, G3 CBW

PELLERIN MILNOR CORPORATION

B2T2000005
2002045G

W9CBW3TG5

G3 CBW SYSTEM MARK 9
CONTROL BOX FIELD
WIRING HOOKUPS

PELLERIN MILNOR CORPORATION

W9CBW3TG5
2002045B

W9CBW3TG5
2002045B

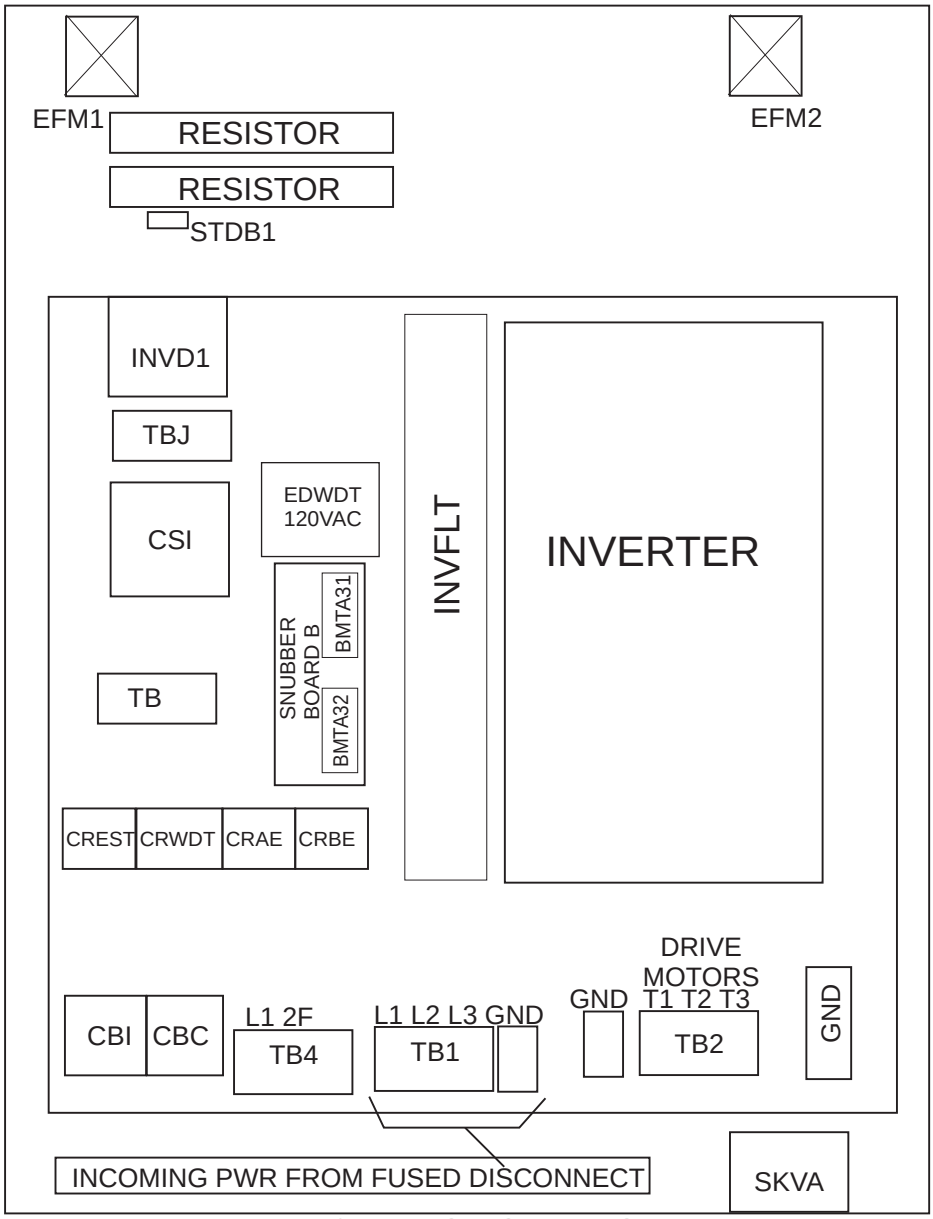

MARK 8 CBW SYSTEMS
INVERTER CONTROL BOX

PELLERIN MILNOR CORPORATION

B2TAG94042
20181166A

W9CBW3TG6
2019122B

W9CBW3TG6

G3 CBW SYSTEM MARK 9
CONTROL BOX LAYOUTS
INVERTER CONTROLS

PELLERIN MILNOR CORPORATION

W9CBW3TG6
2019122B

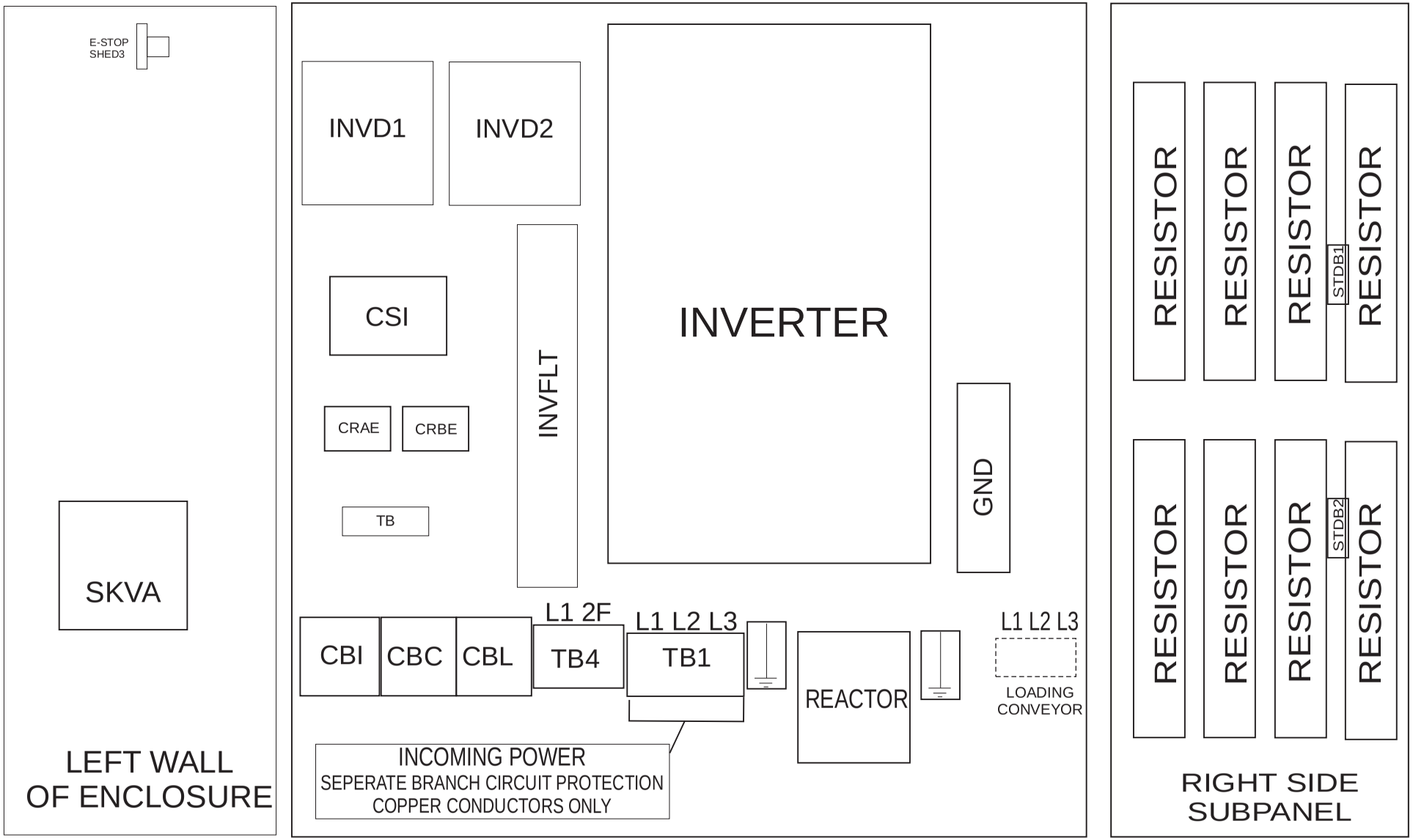

G3/G4 CBW SYSTEM MARK 9
MAIN CONTROL BOX
INVERTER CONTROLS (LEFT)

PELLERIN MILNOR CORPORATION

B2T2010013
2019065A

W9CBW3TG7
2019122B

W9CBW3TG7

G3 CBW SYSTEM MARK 9
CONTROL BOX LAYOUT
LEFT SIDE

PELLERIN MILNOR CORPORATION

W9CBW3TG7
2019122B

W9CBW3TG7
2019122B

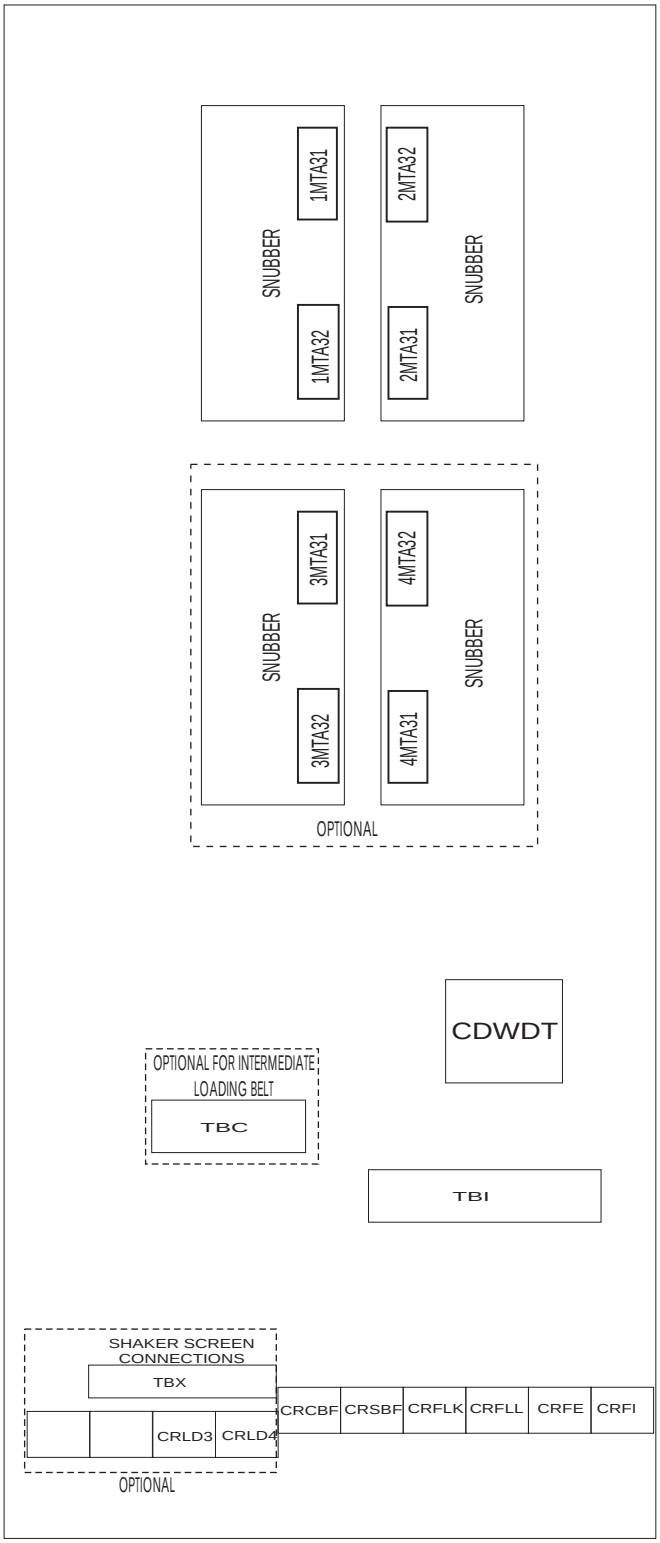

G3/G4 CBW SYSTEM MARK 9
MAIN CONTROL BOX
LEFT PANEL

PELLERIN MILNOR CORPORATION

B2T2010016
2018236A

W9CBW3TG8
2019122B

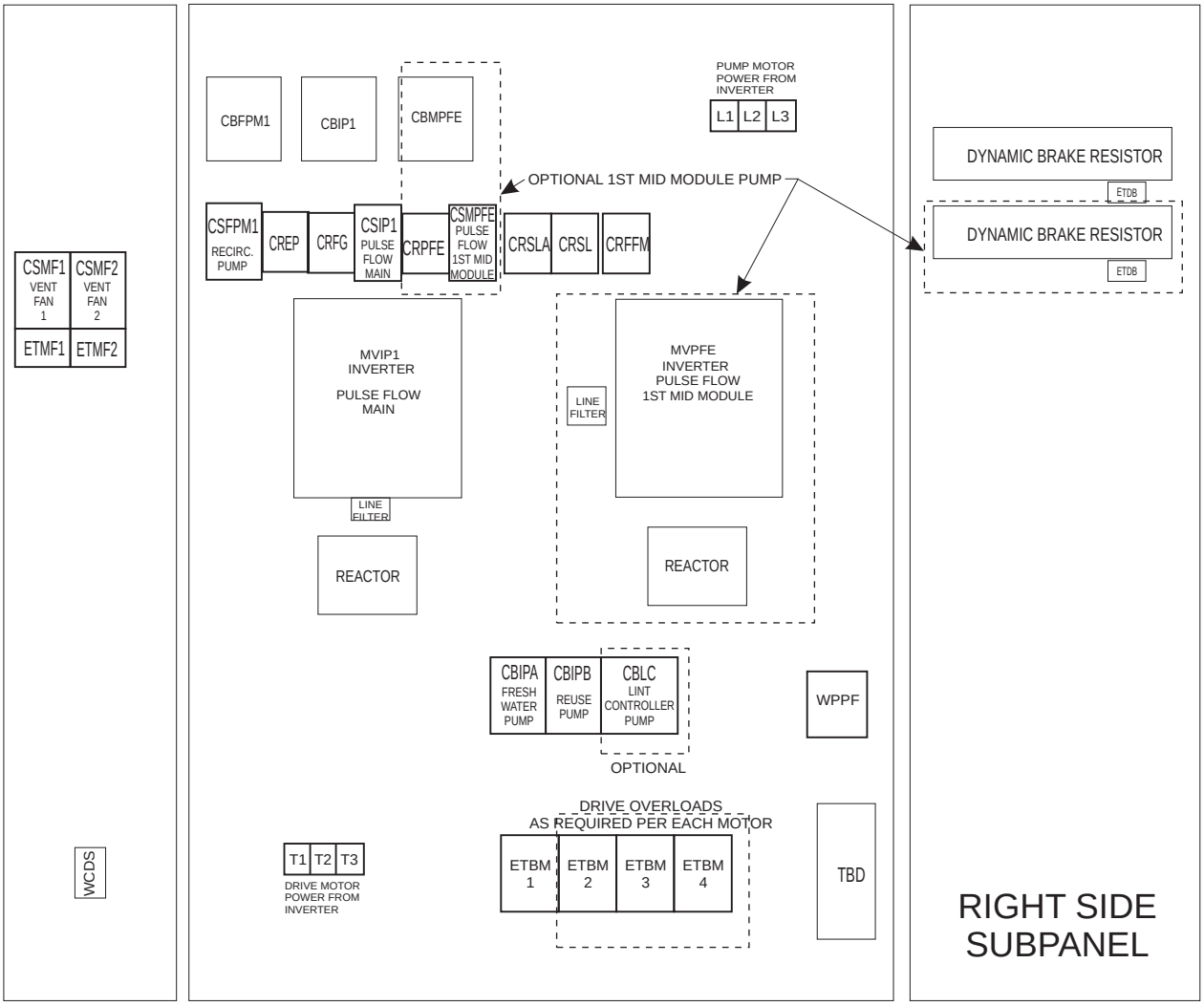

G3/G4 CBW SYSTEM MARK 9
MAIN CONTROL BOX
PULSE FLOW CONTROLS WITH 1 MID MOD PUMP

B2T2011010
2018295A

W9CBW3TG8
G3 CBW SYSTEM MARK 9
CONTROL BOX LAYOUTS (CENTER)
FOR MAIN CONTROL AND INTERPRET RELAY BOX

PELLERIN MILNOR CORPORATION

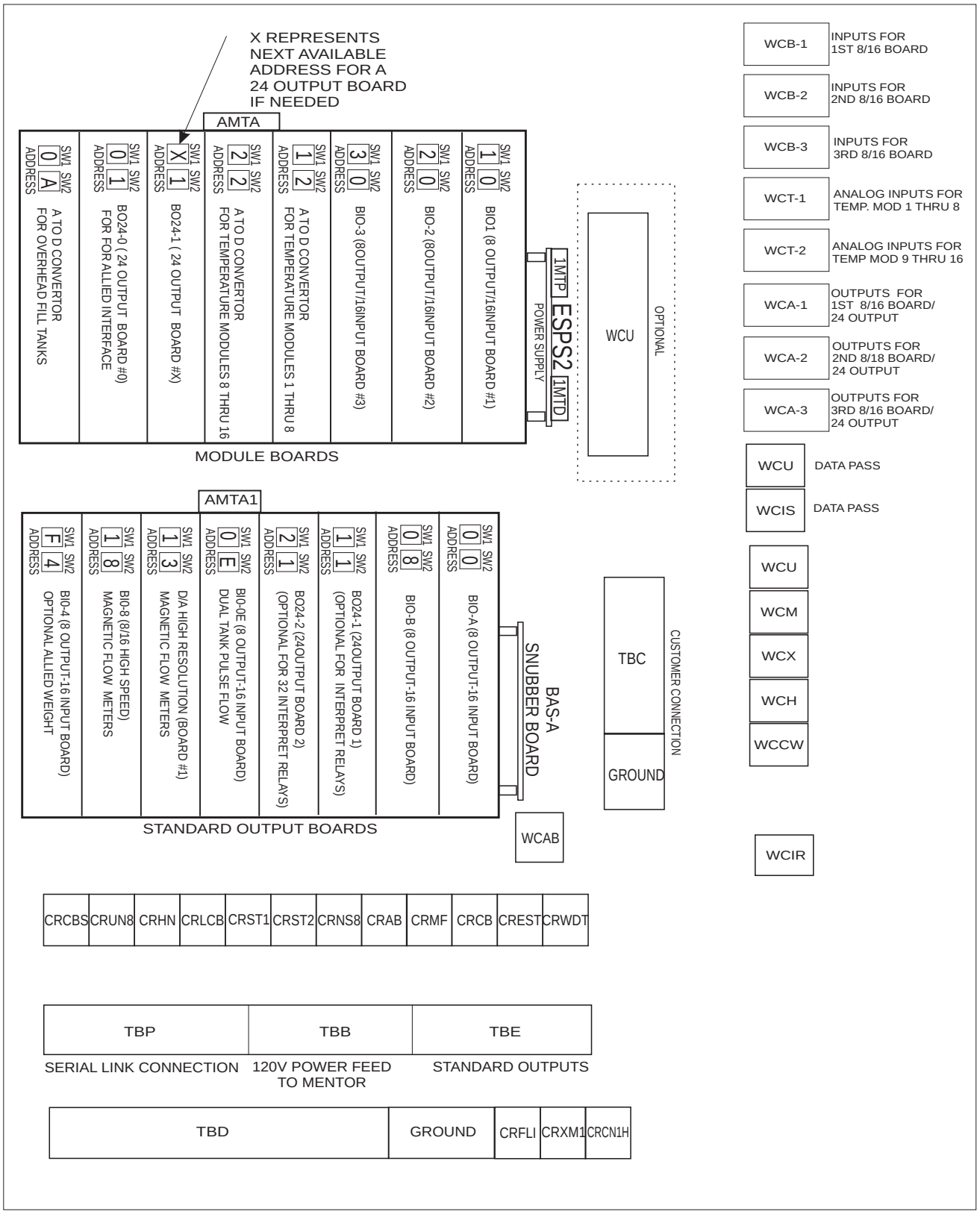

G3-G4 CBW SYSTEM MARK 9
MAIN CONTROL BOX
RIGHT SECTION

PELLERIN MILNOR CORPORATION

B2T2010014
2018295A

W9CBW3TG9
2019122B

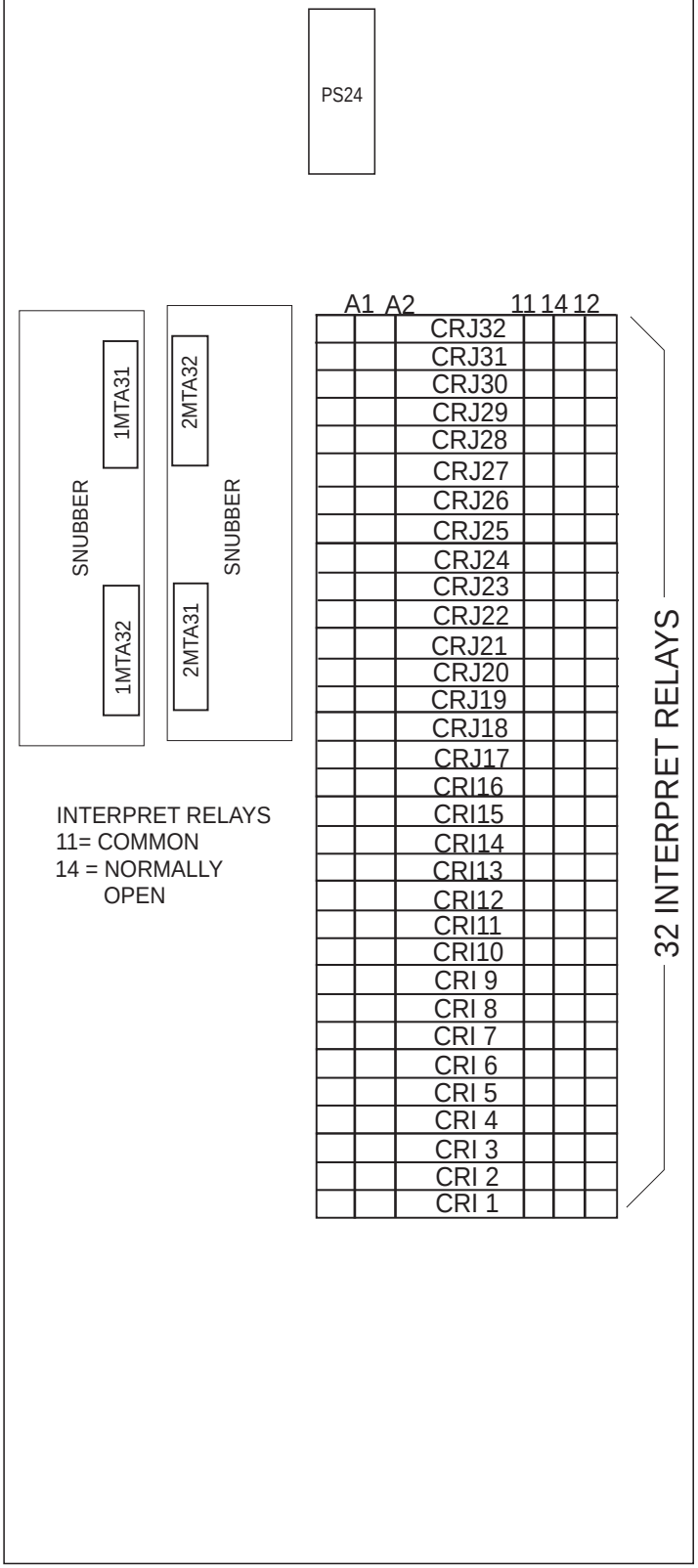

G3/G4 CBW SYSTEM MARK 9
INTERPRET RELAY PANEL
PELLERIN MILNOR CORPORATION

B2T2010015
2019065A

W9CBW3TG9
2019122B

W9CBW3TG9

G3 CBW SYSTEM MARK 9
CONTROL BOX LAYOUTS (RIGHT)
FOR MAIN CONTROL BOX

PELLERIN MILNOR CORPORATION

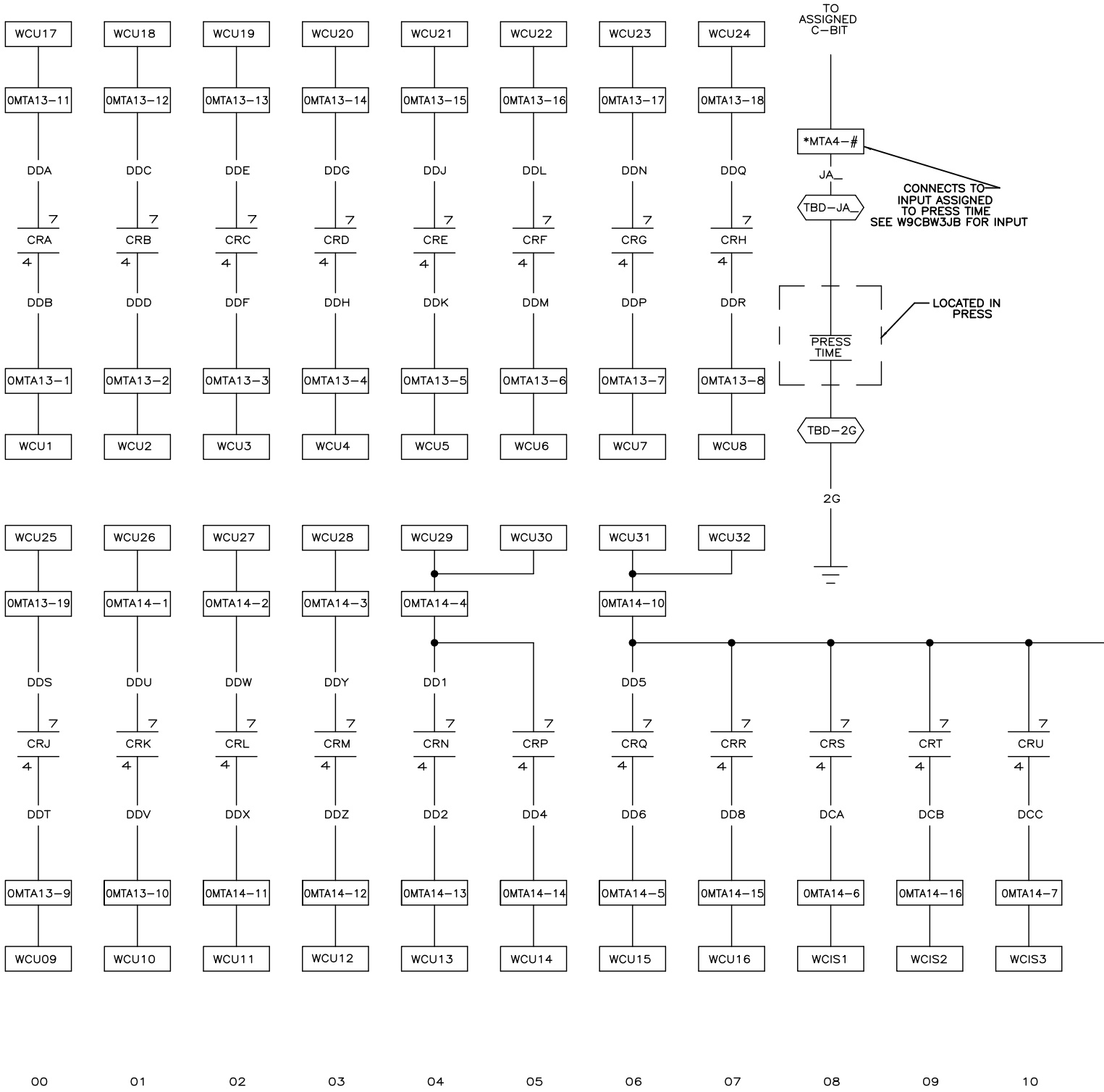

W9CBW3AI
2019122B

NOTE:
FOR ALLIED EXTRACT CODES
USE DRY CODES

W9CBW3AI
2019122B

ALLIED INTERFACE BOARD #0

ALLIED RELAY ASSIGNMENTS

CRA = DRY CODE A
CRB = DRY CODE B
CRC = DRY CODE C
CRD = DRY CODE D
CRE = COOLDOWN A
CRF = COOLDOWN B
CRG = DESTINATION A
CRH = DESTINATION B
CRJ = DESTINATION C
CRK = 3RD PRESSURE
CRL = LOW PRESSURE
CRM = DON'T MAIN PRESS GOODS
CRN = NEW CUSTOMER
CRP = NEW FORMULA
CRQ = SINGLE CAKE
CRR = START PRESS
CRS = CUSTOMER CODE A
CRT = CUSTOMER CODE B
CRU = CUSTOMER CODE C
CRV = CUSTOMER CODE D
CRW = CUSTOMER CODE E
CRX = CUSTOMER CODE F
CRY = CUSTOMER CODE G
CRZ = CUSTOMER CODE H

ALLIED INTERFACE BOARD #6

ALLIED RELAY ASSIGNMENTS

CRA = WEIGHT A
CRB = WEIGHT B
CRC = WEIGHT C
CRD = WEIGHT D
CRE = WEIGHT E
CRF = WEIGHT F
CRG = WEIGHT G
CRH = WEIGHT H
CRJ = WEIGHT J
CRK = WEIGHT K
CRL = WEIGHT L
CRM = WEIGHT M
CRN = GOODS A
CRP = GOODS B
CRQ = GOODS C
CRR = GOODS D
CRS = GOODS E
CRT = GOODS F
CRU = GOODS G
CRV = GOODS H
CRW = GOODS J
CRX = GOOD K
CRY = CUSTOMER CODE J
CRZ = CUSTOMER CODE K

NOTE:
WIRING SHOWS ALLIED INTERFACE BOARD–#0 ONLY IF ALLIED INTERFACE BOARD 6 REQUIRED CONNECTION ARE MADE DIRECTLY TO BOARD MTA'S.

W9CBW3AI

G3 CBW SYSTEM MARK 9
SCHEMATIC: ALLIED INTERFACE

PELLERIN MILNOR CORPORATION

B024–0

1 SW2
0 SW1

24 OUTPUT BOARD #0
LOCATED IN RIGHT (MODULE)
SECTION OF THE MAIN
CONTROL BOX

B024–6

1 SW2
6 SW1

24 OUTPUT BOARD #6
LOCATED IN RIGHT (MODULE)
SECTION OF THE MAIN
CONTROL BOX

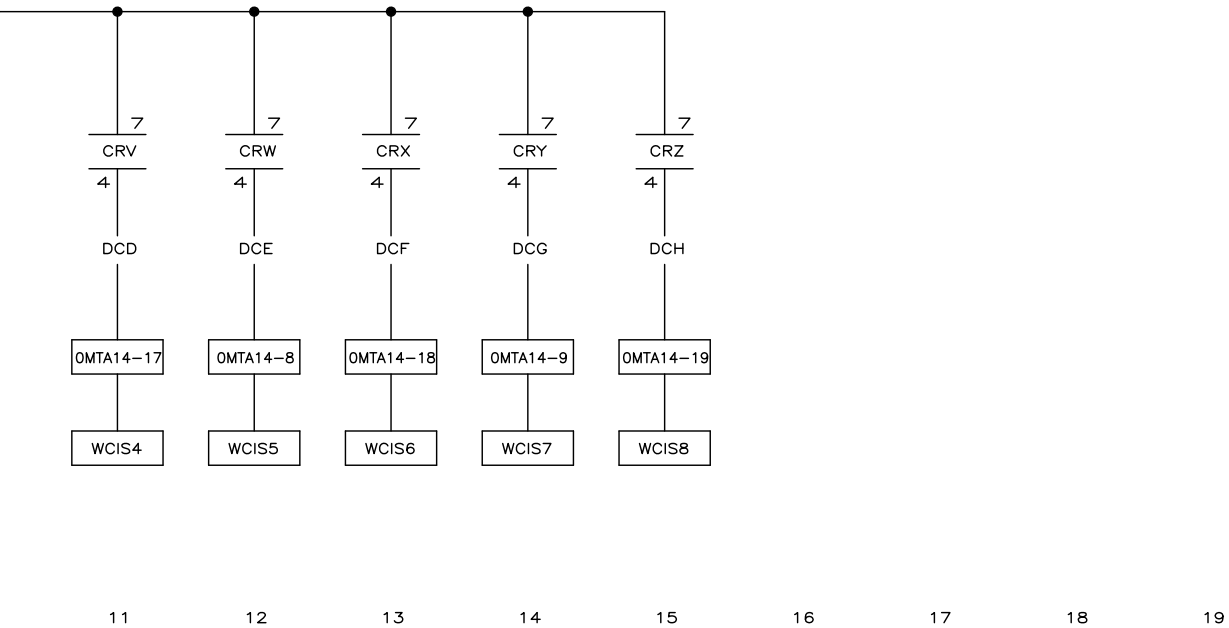

W9CBW3AI
2019122B

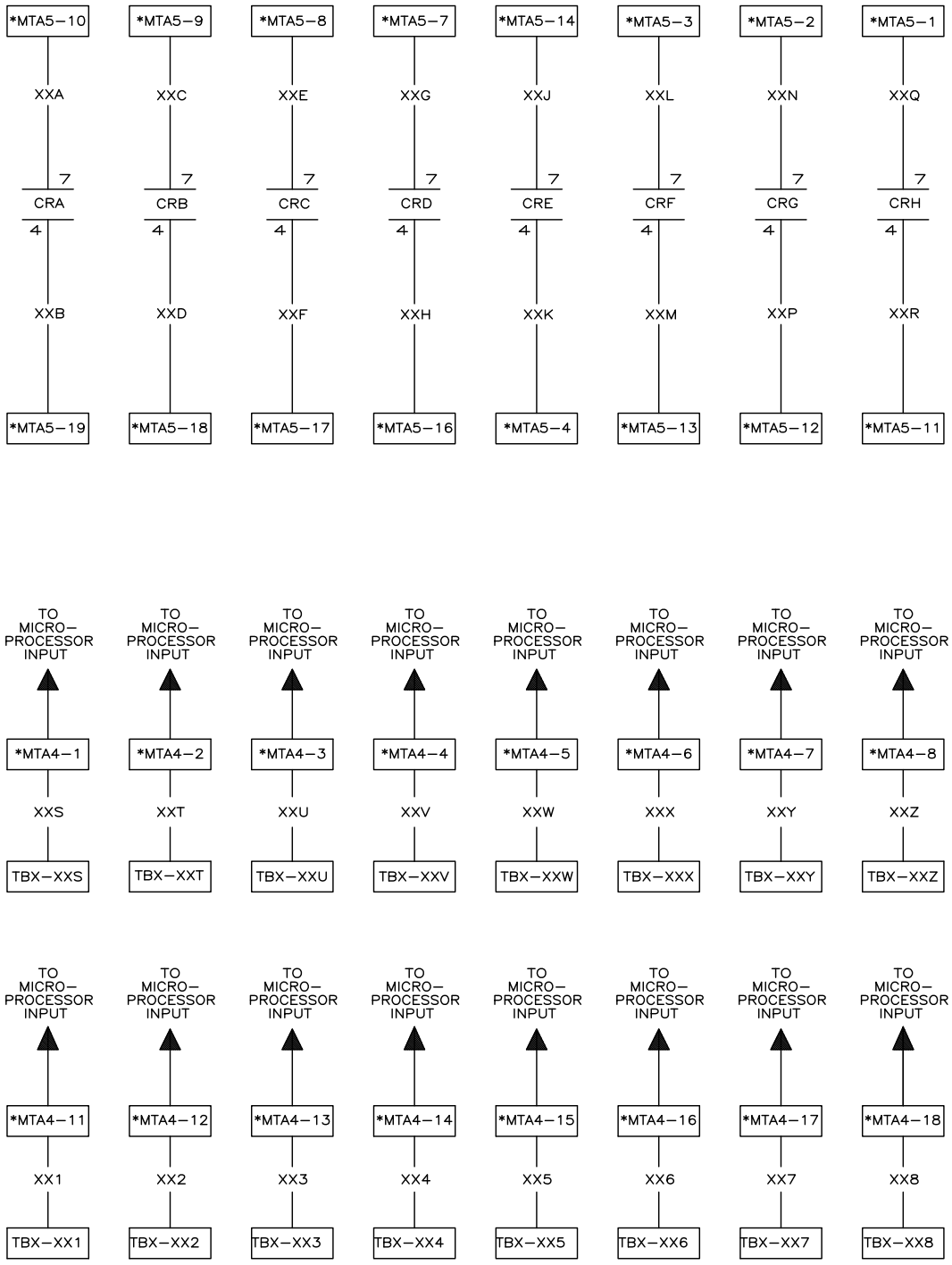

00 01 02 03 04 05 06 07 08 09 10

W9CBW3AW

2021123B

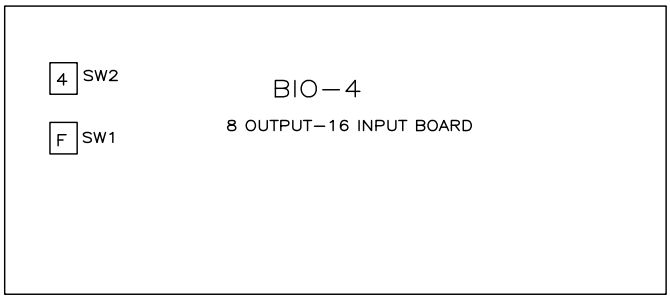

W9CBW3AW

G3 CBW SYSTEMS MARK 9
SCHEMATIC: ALLIED WEIGHT INPUTS

PELLERIN MILNOR CORPORATION

NOTES:

1. THIS BOARD ACCOMMODATES A TWELVE BIT DATA INPUT PROVIDING FOR A WEIGHT VALUE FROM 0 THROUGH 409.5. TOTAL WEIGHT CORRESPONDING TO THE SUM OF THE INDIVIDUAL VALUES OF EACH ACTIVE INPUT AS SHOWN IN THE TABLE BELOW. XX5/6 FOR 1000 FORMULA.

INPUT	BIT	VALUE
XXS	0	0.1
XXT	1	0.2
XXU	2	0.4
XXV	3	0.8
XXW	4	1.6
XXX	5	3.2
XXY	6	6.4
XXZ	7	12.8
XX1	8	25.6
XX2	9	51.2
XX3	10	102.4
XX4	11	204.8
XX5	FORMULA BIT 8	
XX6	FORMULA BIT 9	
XX7	NOT USED	
XX8	X10	

2. OUTPUTS FROM THIS BOARD ARE NOT USED.

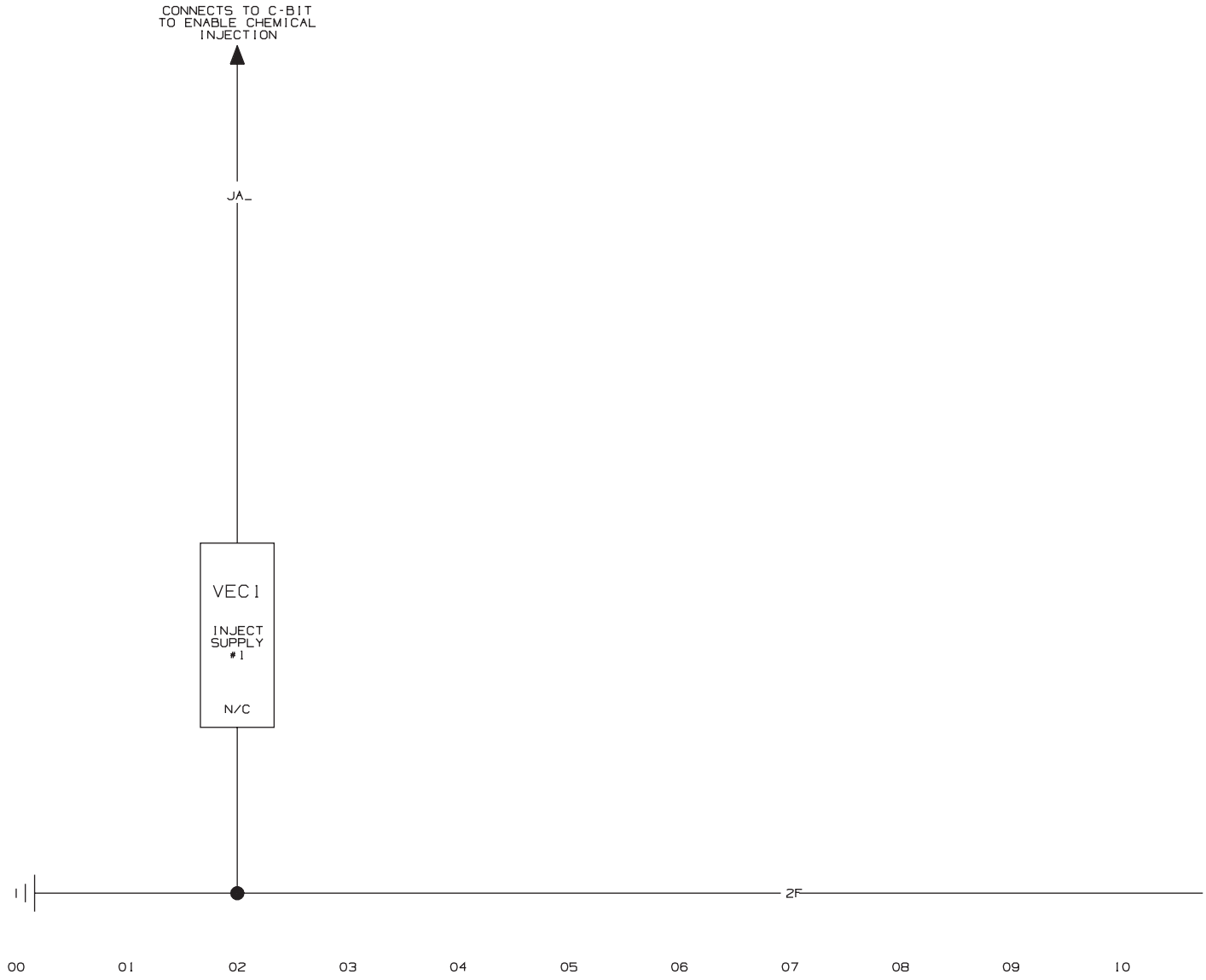

W9CBW3CA
99133B

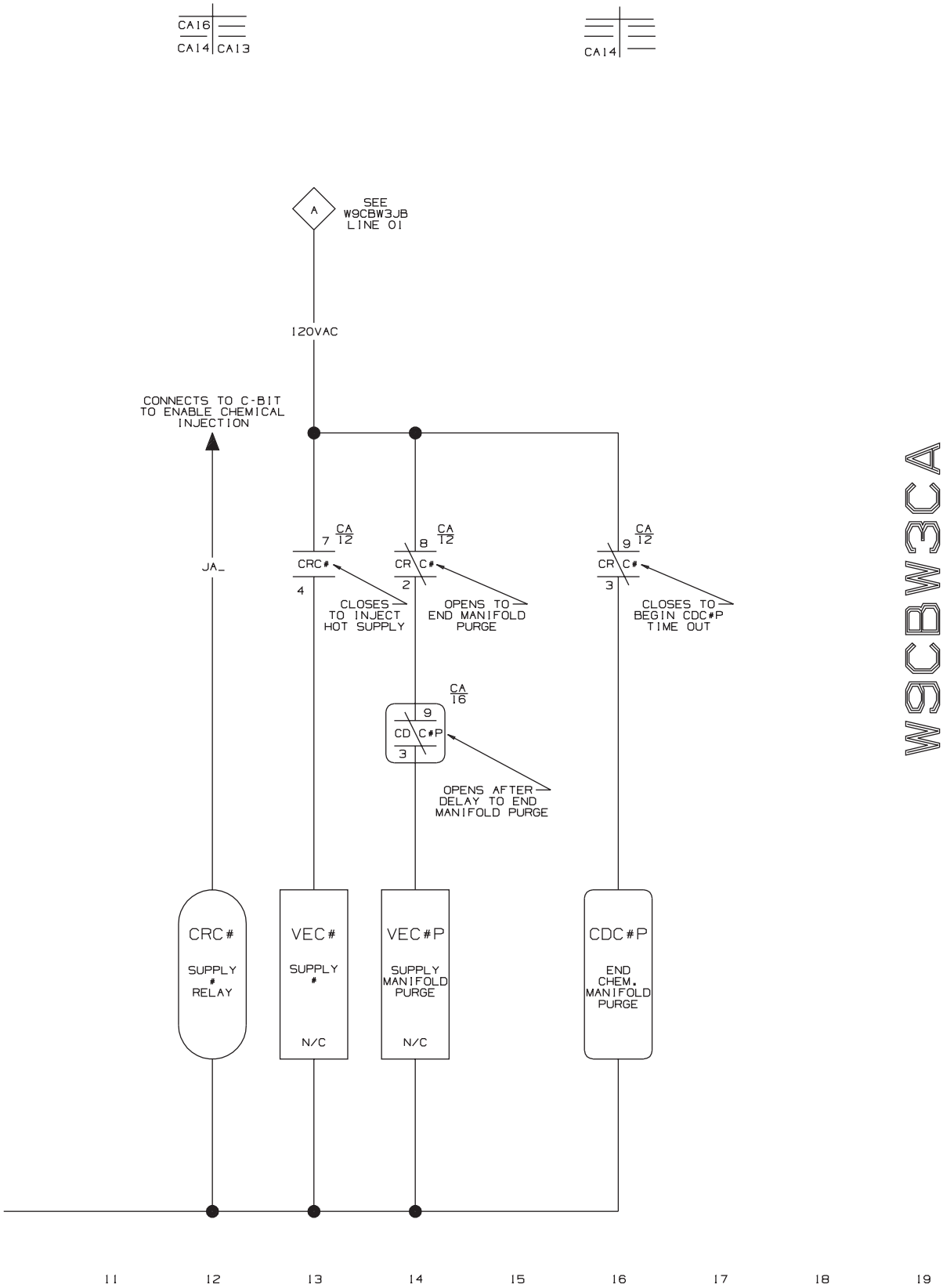

W9CBW3CA

G3 CBW SYSTEM MARK 9

SCHEMATIC: CHEMICAL ADD OPTIONS

CONTROL VOLTAGE: 110V1P50HZ/120VP60HZ

PELLERIN MILNOR CORPORATION

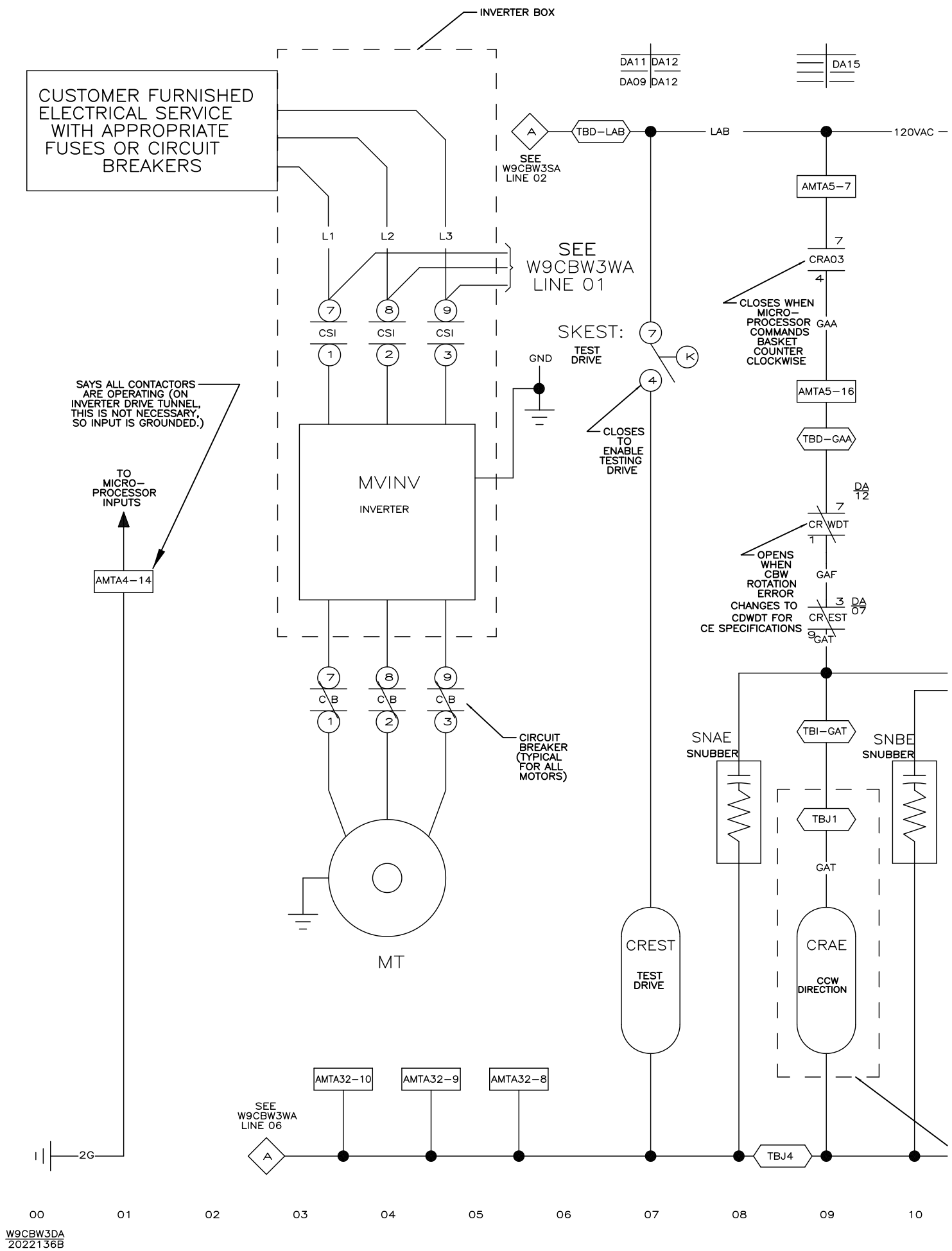
INVERTER BOX
CUSTOMER FURNISHED ELECTRICAL SERVICE WITH APPROPRIATE FUSES OR CIRCUIT BREAKERS
L1
L2
L3
SEE W9CBW3WA LINE 01
CSI
GND
SKEST:
TEST DRIVE
SAYS ALL CONTACTORS ARE OPERATING (ON INVERTER DRIVE TUNNEL, THIS IS NOT NECESSARY, SO INPUT IS GROUNDED.)
TO MICRO-PROCESSOR INPUTS
AMTA4-14
MVINV
INVERTER
CLOSES TO ENABLE TESTING DRIVE
CB
CIRCUIT BREAKER (TYPICAL FOR ALL MOTORS)
MT
DA11 DA12
DA09 DA12
DA15
TBD-LAB
LAB
120VAC
SEE W9CBW3SA LINE 02
AMTA5-7
CRA03
CLOSES WHEN MICRO-PROCESSOR COMMANDS BASKET COUNTER CLOCKWISE
GAA
AMTA5-16
TBD-GAA
DA 12
CR WDT
OPENS WHEN CBW ROTATION ERROR CHANGES TO CDWDT FOR CE SPECIFICATIONS
GAF
CR EST
DA 07
GAT
SNAE
SNUBBER
TBI-GAT
SNBE
SNUBBER
TBJ1
GAT
CREST
TEST DRIVE
CRAE
CCW DIRECTION
AMTA32-10
AMTA32-9
AMTA32-8
SEE W9CBW3WA LINE 06
2G
TBJ4
00
01
02
03
04
05
06
07
08
09
10
W9CBW3DA
2022136B

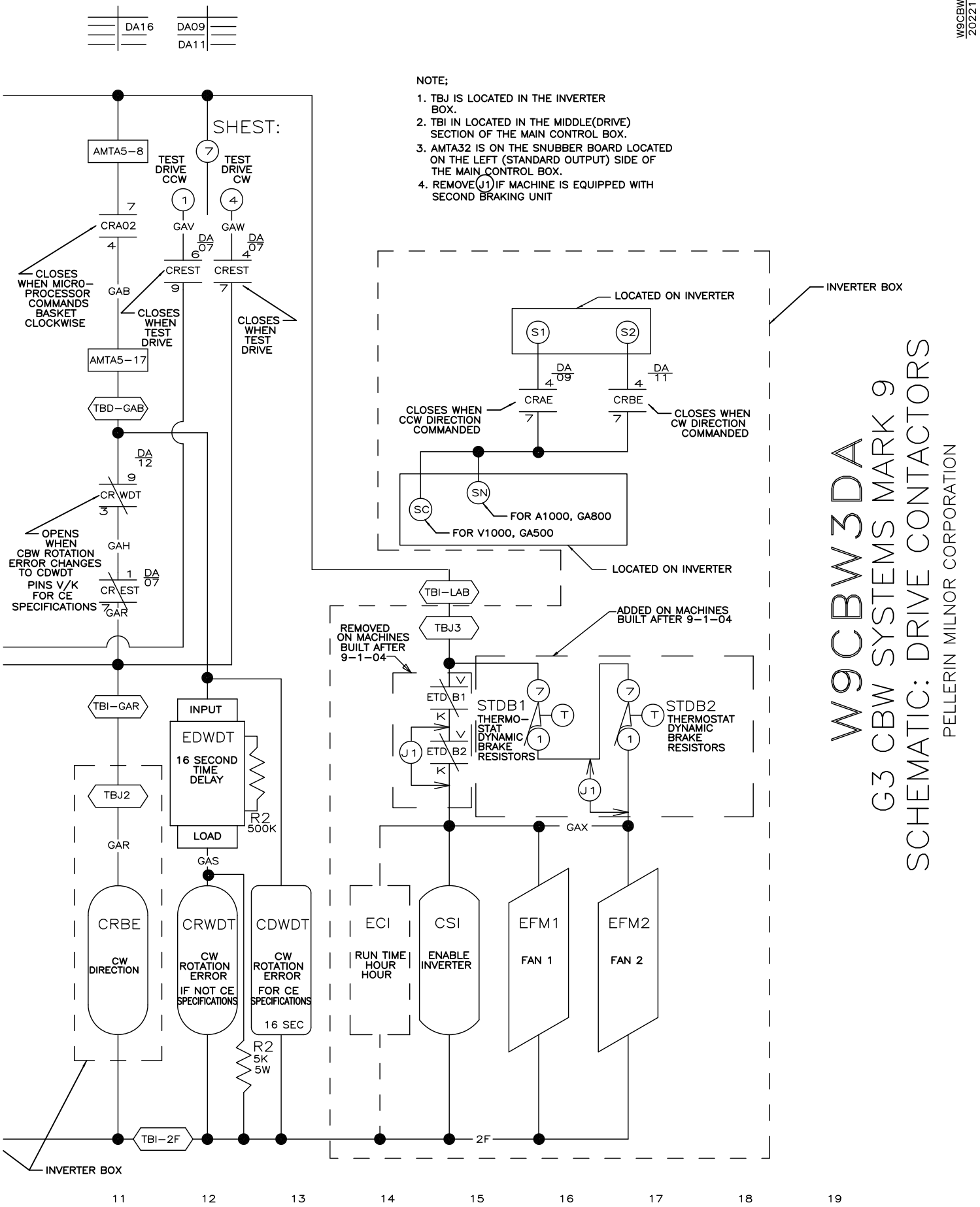

W9CBW3DA
G3 CBW SYSTEMS MARK 9
SCHEMATIC: DRIVE CONTACTORS
PELLERIN MILNOR CORPORATION

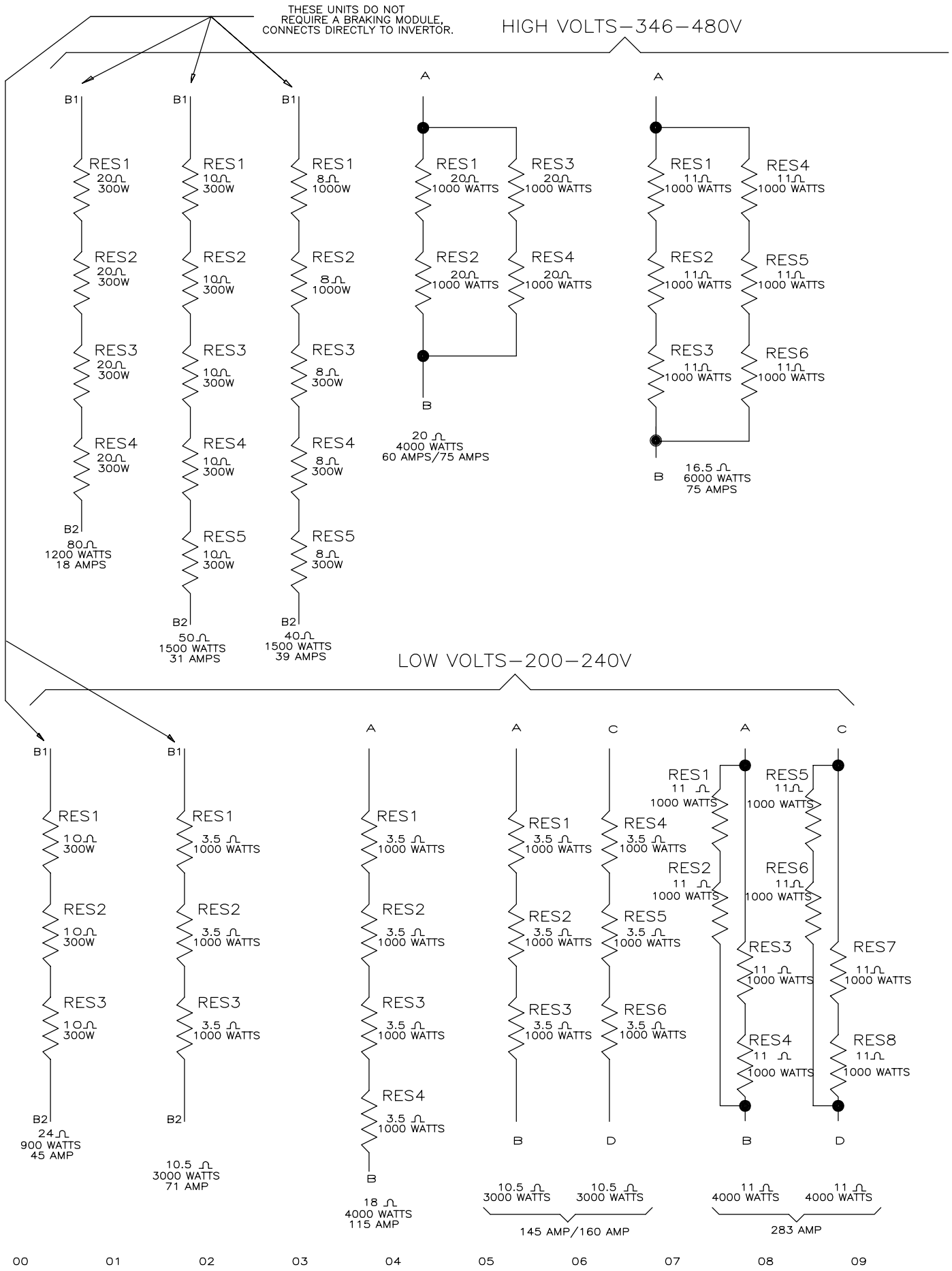

W9CBW3DB
20133063B

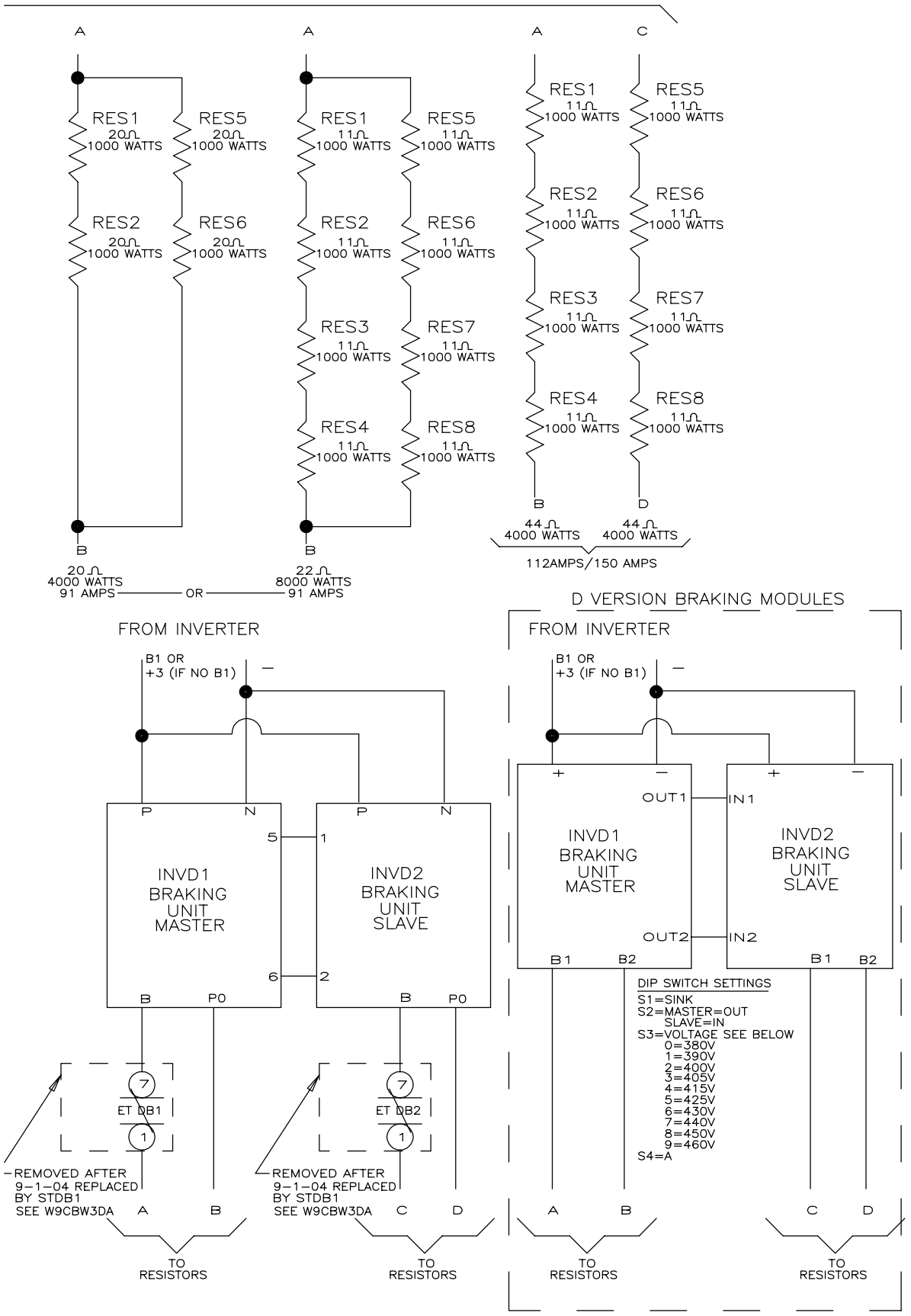

W9CBW3DB

G3 CBW SYSTEMS MARK 9
VARIABLE SPEED DRIVE DYANMIC BRAKING RESISTORS

PELLERIN MILNOR CORPORATION

SCHEMATIC:

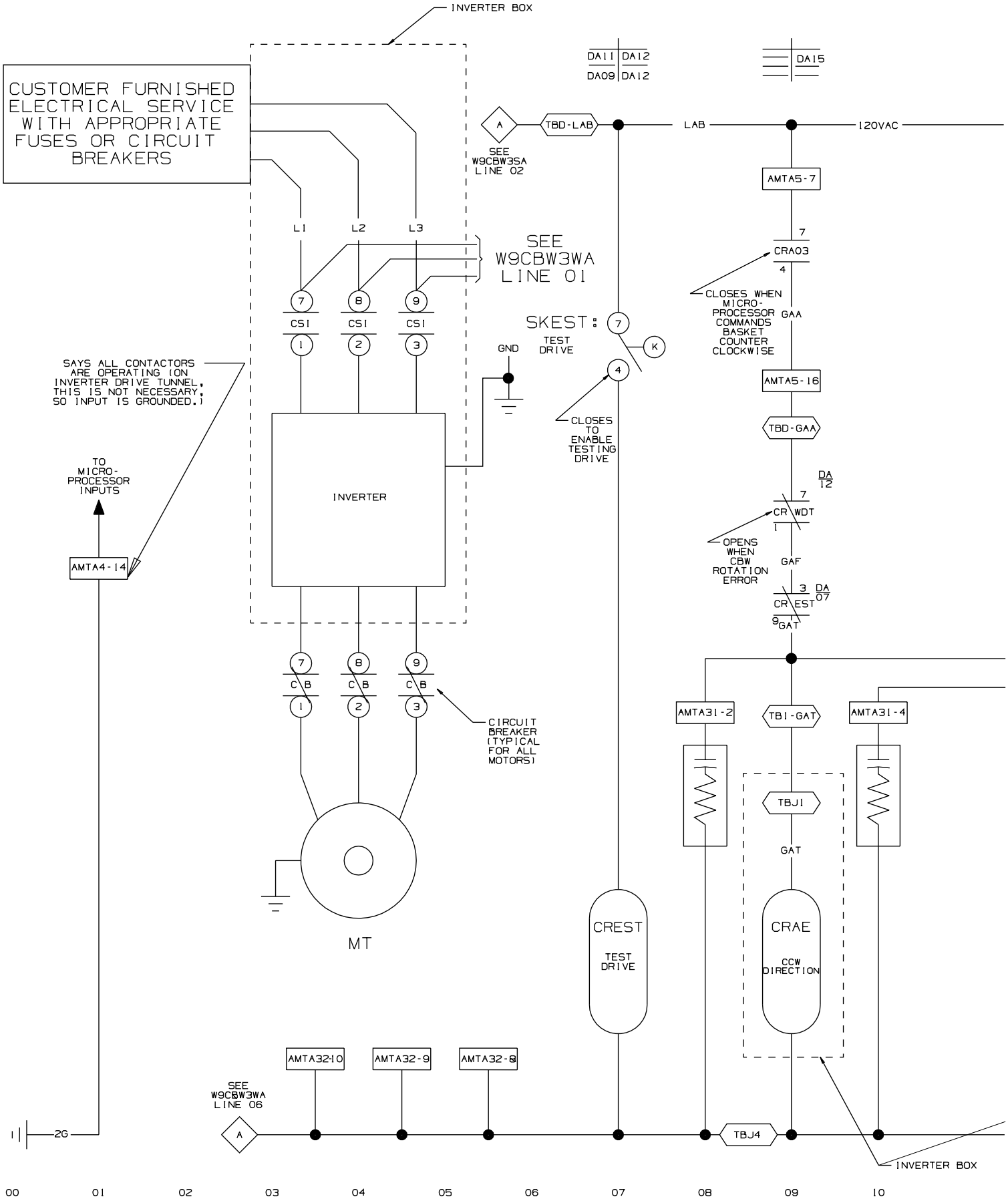

W9CBW3DC
9952TB

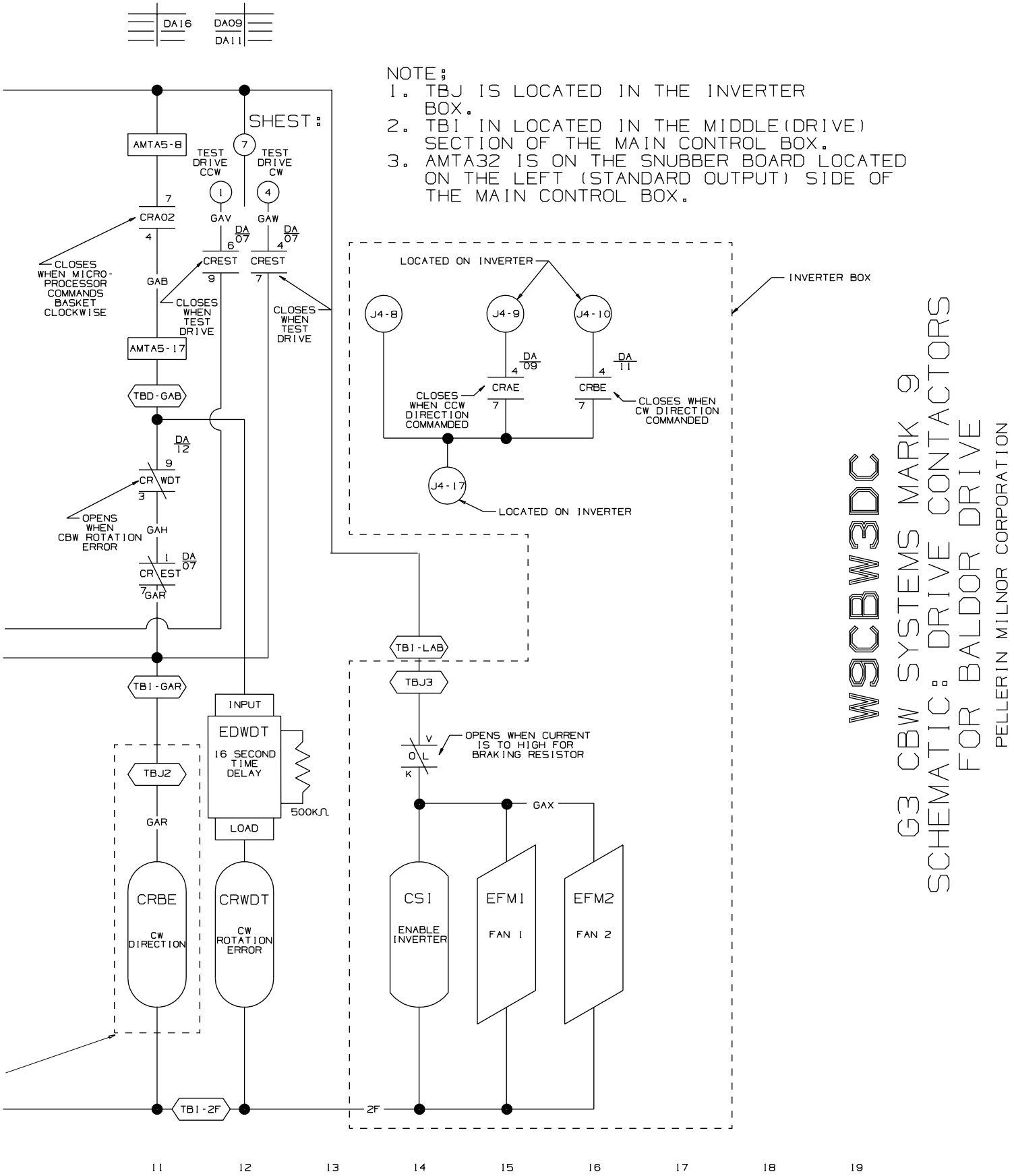

W9CBW3DC

G3 CBW SYSTEMS MARK 9
SCHEMATIC: DRIVE CONTACTORS
FOR BALDOR DRIVE

PELLERIN MILNOR CORPORATION

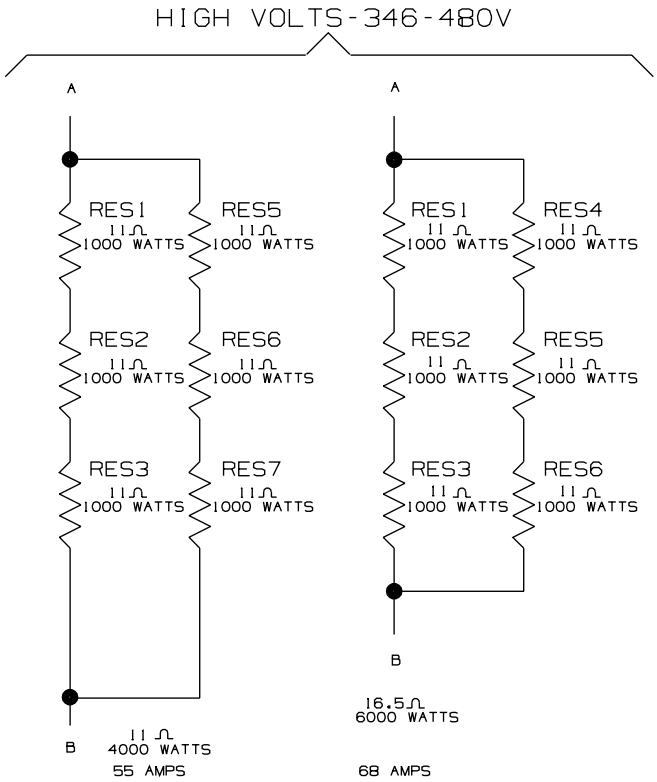

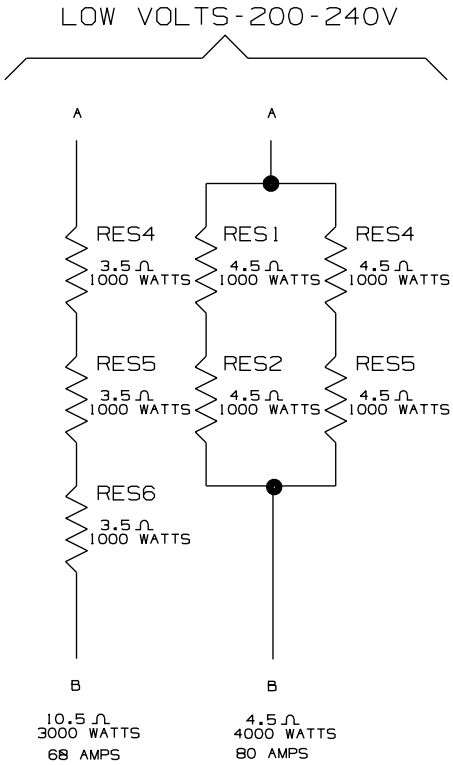

00 01 02 03 04 05 06 07 08 09 10

W9CBW3DD
99521B

W9CBW3DD

G3 CBW SYSTEMS MARK 9

SCHEMATIC: VARIABLE SPEED DRIVE DYANMIC BRAKING RESISTORS FOR BALDOR DRIVE

PELLERIN MILNOR CORPORATION

11 12 13 14 15 16 17 18 19

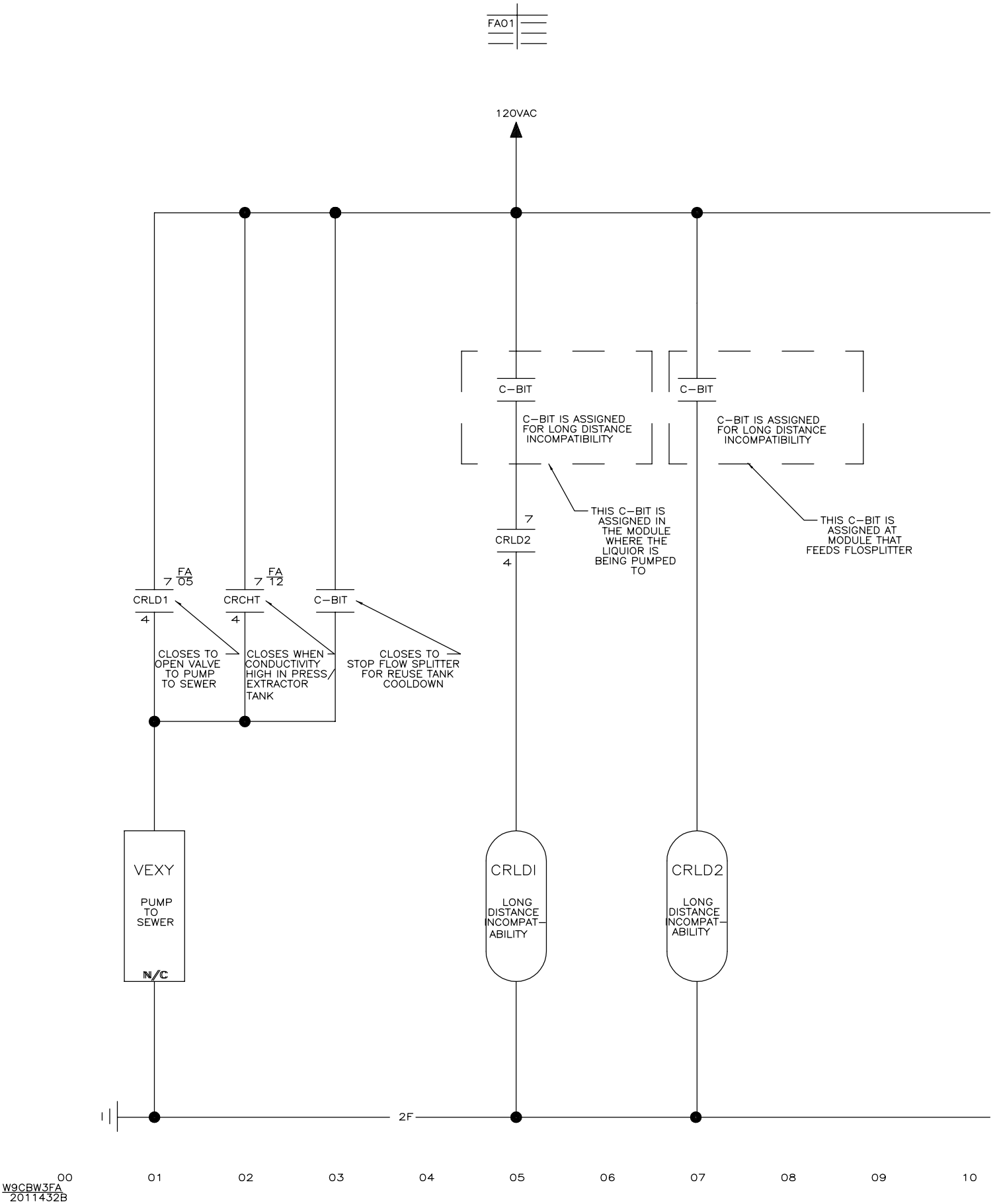
FA01
120VAC
C-BIT
C-BIT
C-BIT IS ASSIGNED FOR LONG DISTANCE INCOMPATIBILITY
C-BIT IS ASSIGNED FOR LONG DISTANCE INCOMPATIBILITY
THIS C-BIT IS ASSIGNED IN THE MODULE WHERE THE LIQUOR IS BEING PUMPED TO
THIS C-BIT IS ASSIGNED AT MODULE THAT FEEDS FLOSPLITTER
7
CRLD2
4
7 FA 05
CRLD1
4
7 FA 12
CRCHT
4
C-BIT
CLOSES TO OPEN VALVE TO PUMP TO SEWER
CLOSES WHEN CONDUCTIVITY HIGH IN PRESS/ EXTRACTOR TANK
CLOSES TO STOP FLOW SPLITTER FOR REUSE TANK COOLDOWN
VEXY
PUMP TO SEWER
N/C
CRLDI
LONG DISTANCE INCOMPAT-ABILITY
CRLD2
LONG DISTANCE INCOMPAT-ABILITY
1
2F
00
01
02
03
04
05
06
07
08
09
10
W9CBW3FA
2011432B

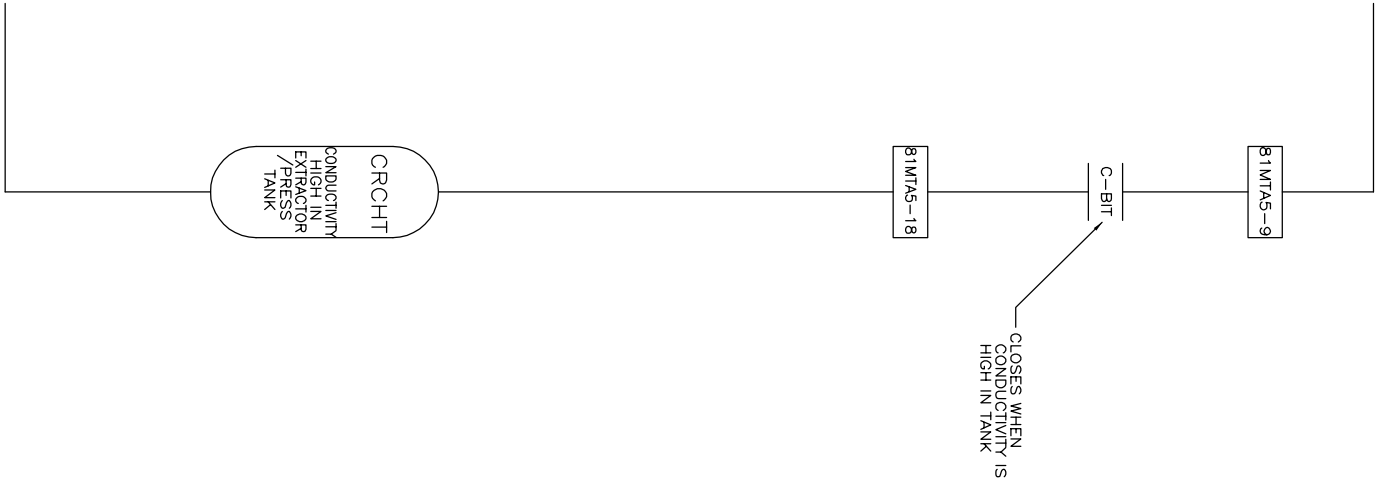

W9CBW3FA

G3 CBW SYSTEMS MARK 9
SCHEMATIC: LONG DISTANCE INCOMPATIBILITY

PELLERIN MILNOR CORPORATION

W9CBW3FA
2011432B

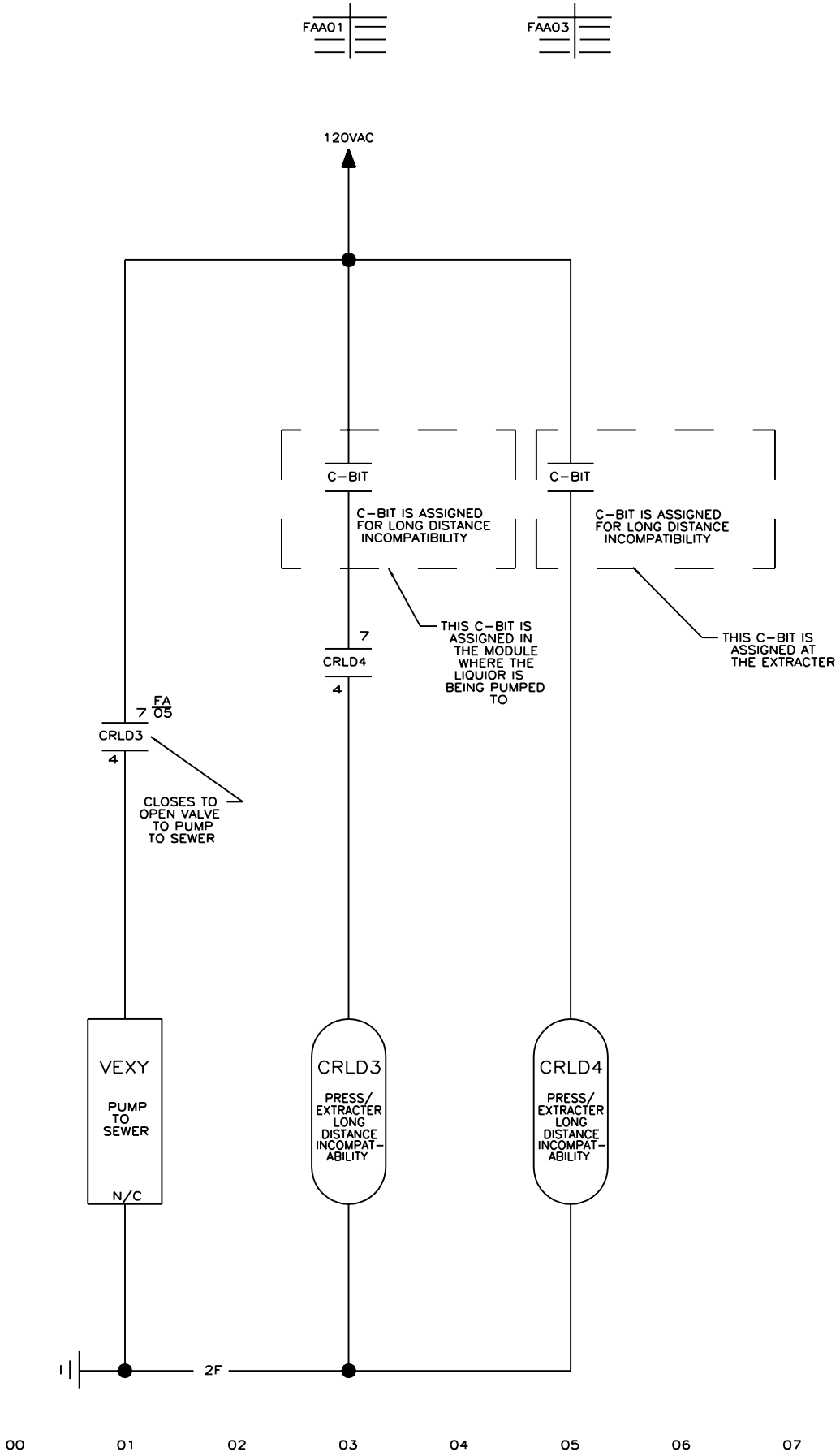

W9CBW3FAA
2004076B

W9CBW3FAA

G3 CBW SYSTEMS MARK 9

SCHEMATIC: PRESS/EXTRACTER
LONG DISTANCE INCOMPATIBILITY

PELLERIN MILNOR CORPORATION

W9CBW3FAA
2004076B

W9CBW3FAA
2004076B

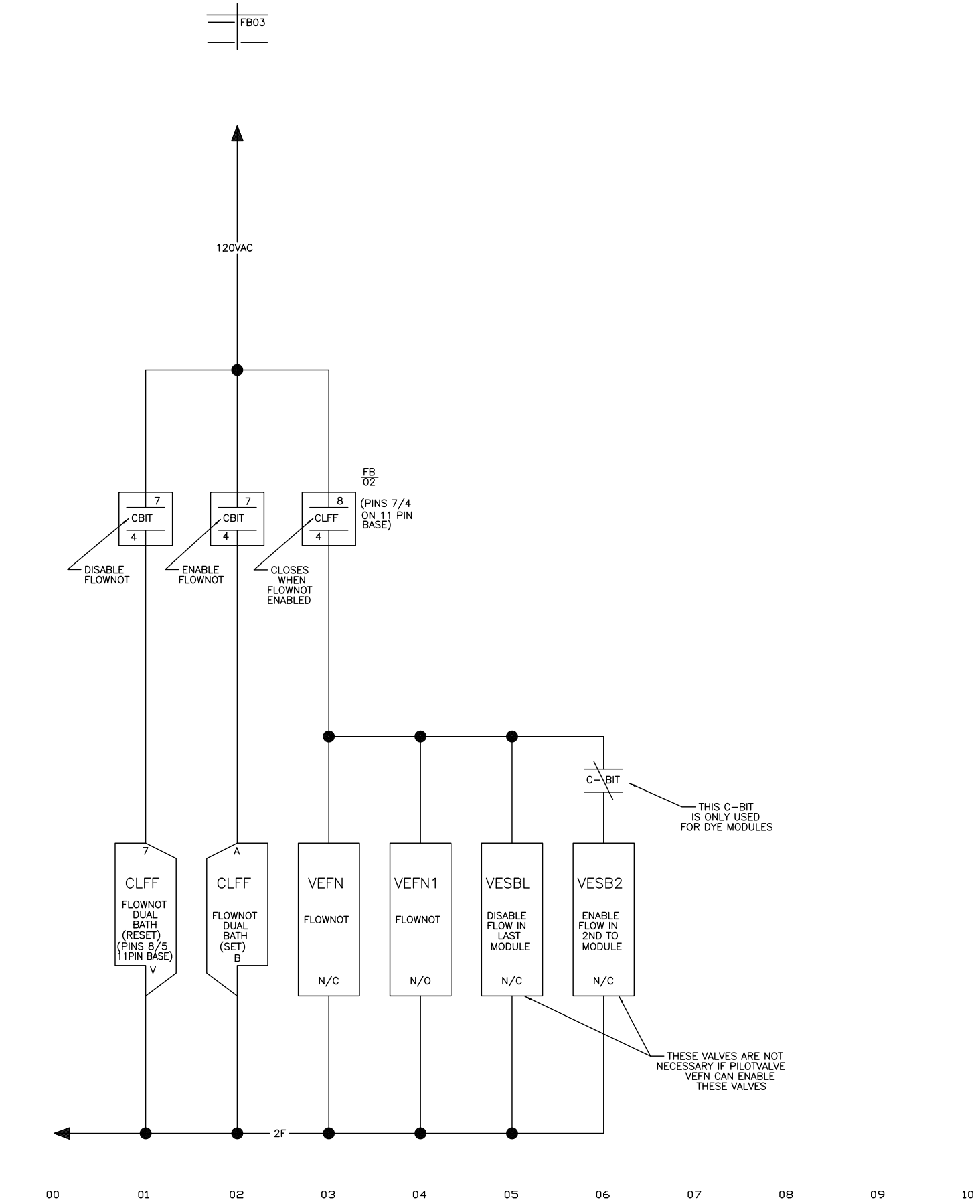

W9CBW3FB
2025142B

W9CBW3FB

G3 CBW SYSTEMS MARK 9
SCHEMATIC: DUAL BATH

PELLERIN MILNOR CORPORATION

NOTES:

1. DUAL BATH REQUIRES FAST FILL

11 12 13 14

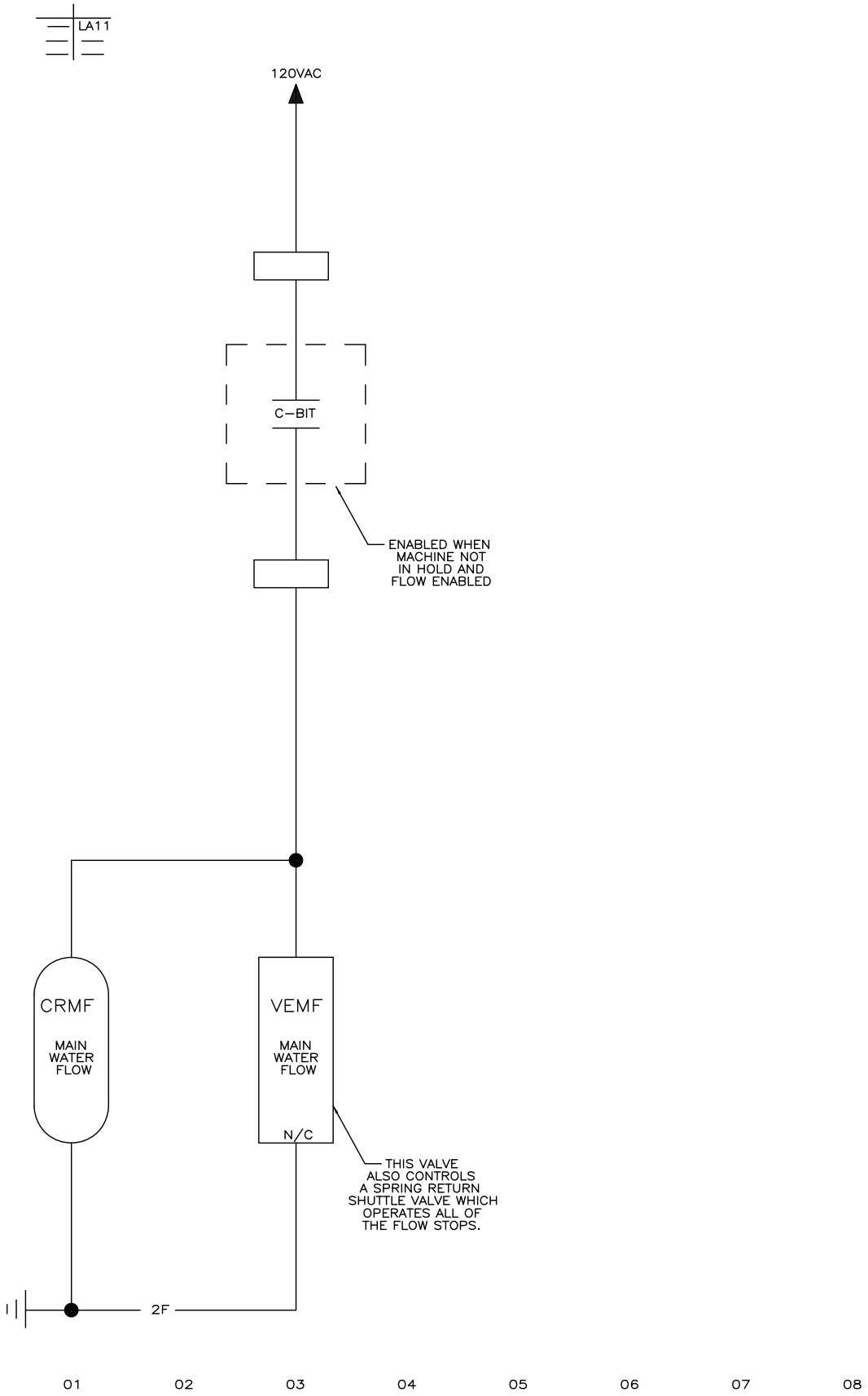

W9CBW3FC
2018192B

W9CBW3FC

G3 CBW SYSTEMS MARK 9

SCHEMATIC: MAIN FLOW/FLOW STOP

PELLERIN MILNOR CORPORATION

W9CBW3FC
2018192B

W9CBW3FC
2018192B

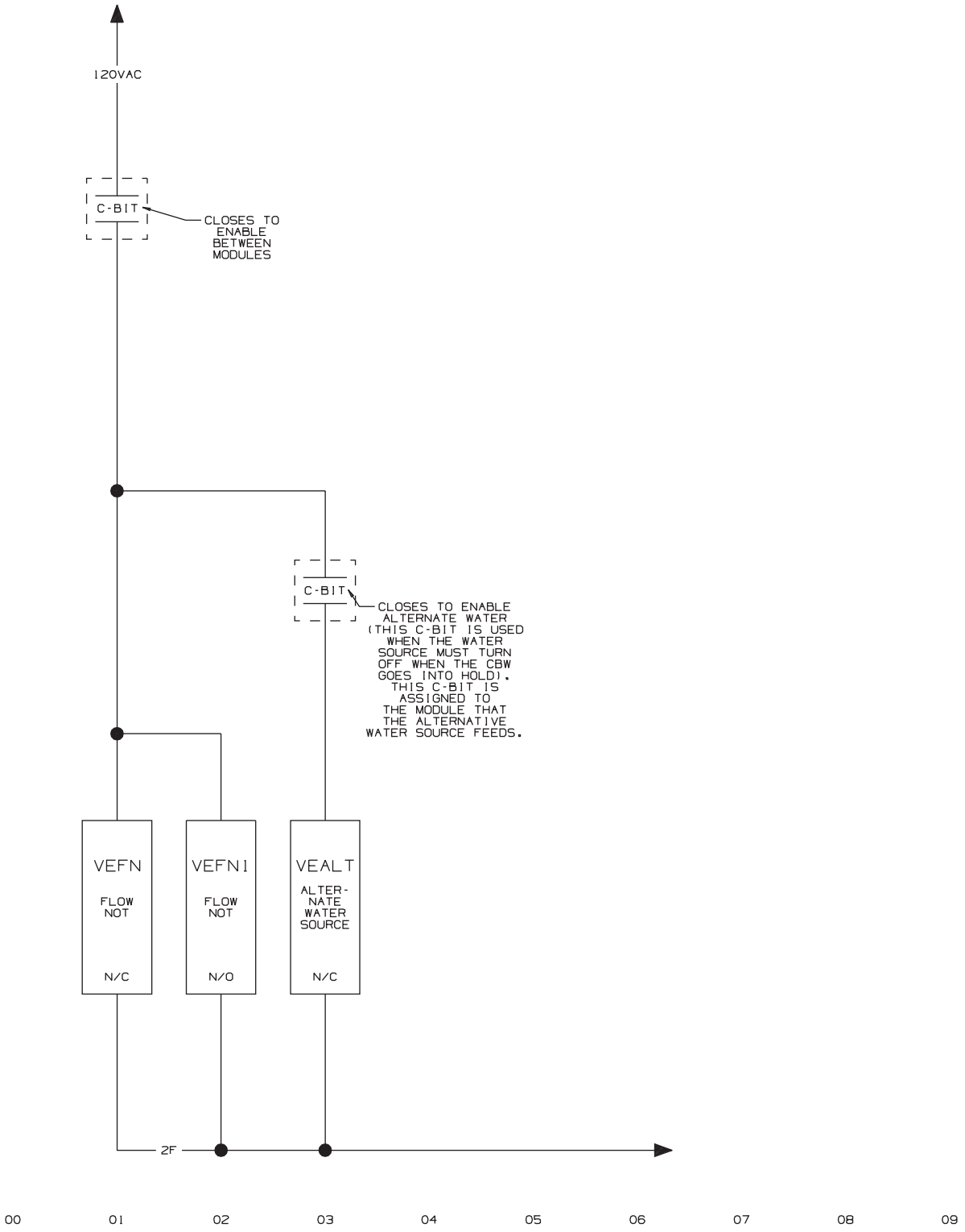
120VAC
C-BIT
CLOSES TO ENABLE BETWEEN MODULES
C-BIT
CLOSES TO ENABLE ALTERNATE WATER (THIS C-BIT IS USED WHEN THE WATER SOURCE MUST TURN OFF WHEN THE CBW GOES INTO HOLD). THIS C-BIT IS ASSIGNED TO THE MODULE THAT THE ALTERNATIVE WATER SOURCE FEEDS.
VEFN
FLOW NOT
N/C
VEFN1
FLOW NOT
N/O
VEALT
ALTER-NATE WATER SOURCE
N/C
2F
00
01
02
03
04
05
06
07
08
09
W9CBW3FN
99193B

10

11

12

13

W9CBW3FN

G3 CBW SYSTEMS: MARK 9
SCHEMATIC: FLOW/FLOW NOT

PELLERIN MILNOR CORPORATION

W9CBW3FN
99193B

W9CBW3FN
99193B

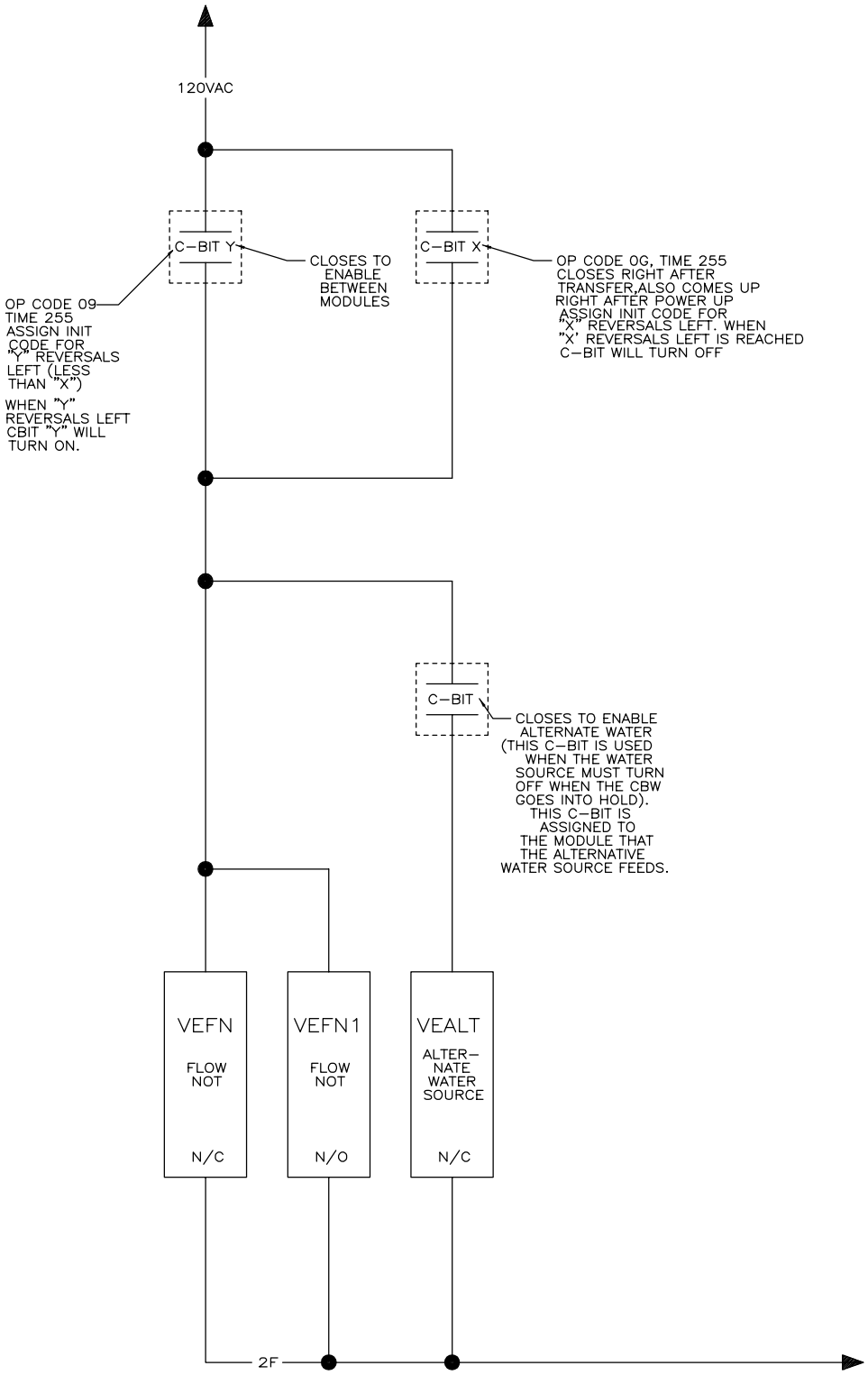

00 01 02 03 04 05 06 07 08 09 10

W9CBW3FNA
2010243B

W9CBW3FNA

G3 CBW SYSTEMS: MARK 9
SCHEMATIC: FLOW/FLOW NOT

PELLERIN MILNOR CORPORATION

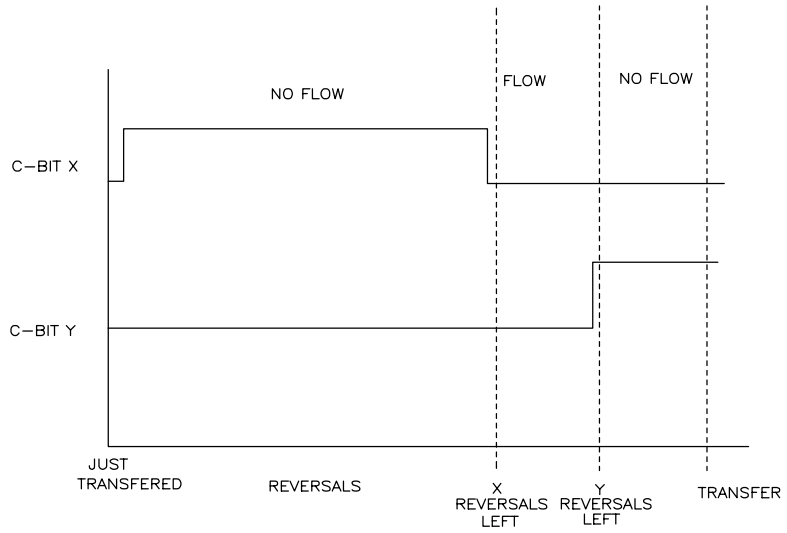

11 12 13

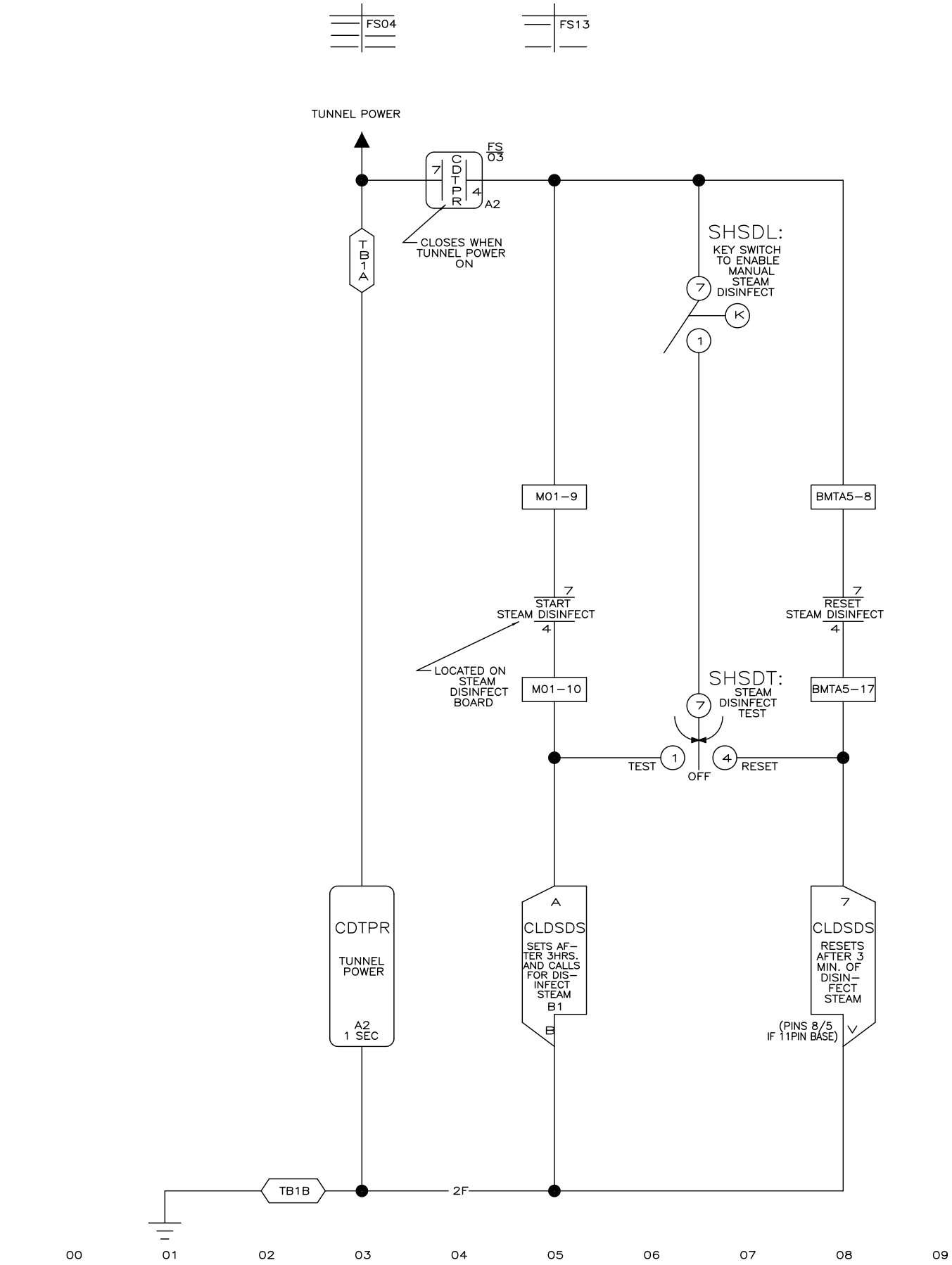
FS04
FS13
TUNNEL POWER
FS 03
CDTPR
7
4
A2
CLOSES WHEN TUNNEL POWER ON
TB1A
SHSDL:
KEY SWITCH TO ENABLE MANUAL STEAM DISINFECT
7
K
1
M01–9
BMTA5–8
7
START STEAM DISINFECT
4
7
RESET STEAM DISINFECT
4
LOCATED ON STEAM DISINFECT BOARD
M01–10
SHSDT:
STEAM DISINFECT TEST
7
BMTA5–17
TEST
1
OFF
4
RESET
CDTPR
TUNNEL POWER
A2
1 SEC
A
CLDSDS
SETS AF–TER 3HRS. AND CALLS FOR DIS–INFECT STEAM
B1
B
7
CLDSDS
RESETS AFTER 3 MIN. OF DISIN–FECT STEAM
(PINS 8/5 IF 11PIN BASE)
V
TB1B
2F
00
01
02
03
04
05
06
07
08
09
W9CBW3FS
2025142B

W9CBW3FS

G3 CBW SYSTEMS MARK 9
SCHEMATIC: STEAM DISINFECT

PELLERIN MILNOR CORPORATION

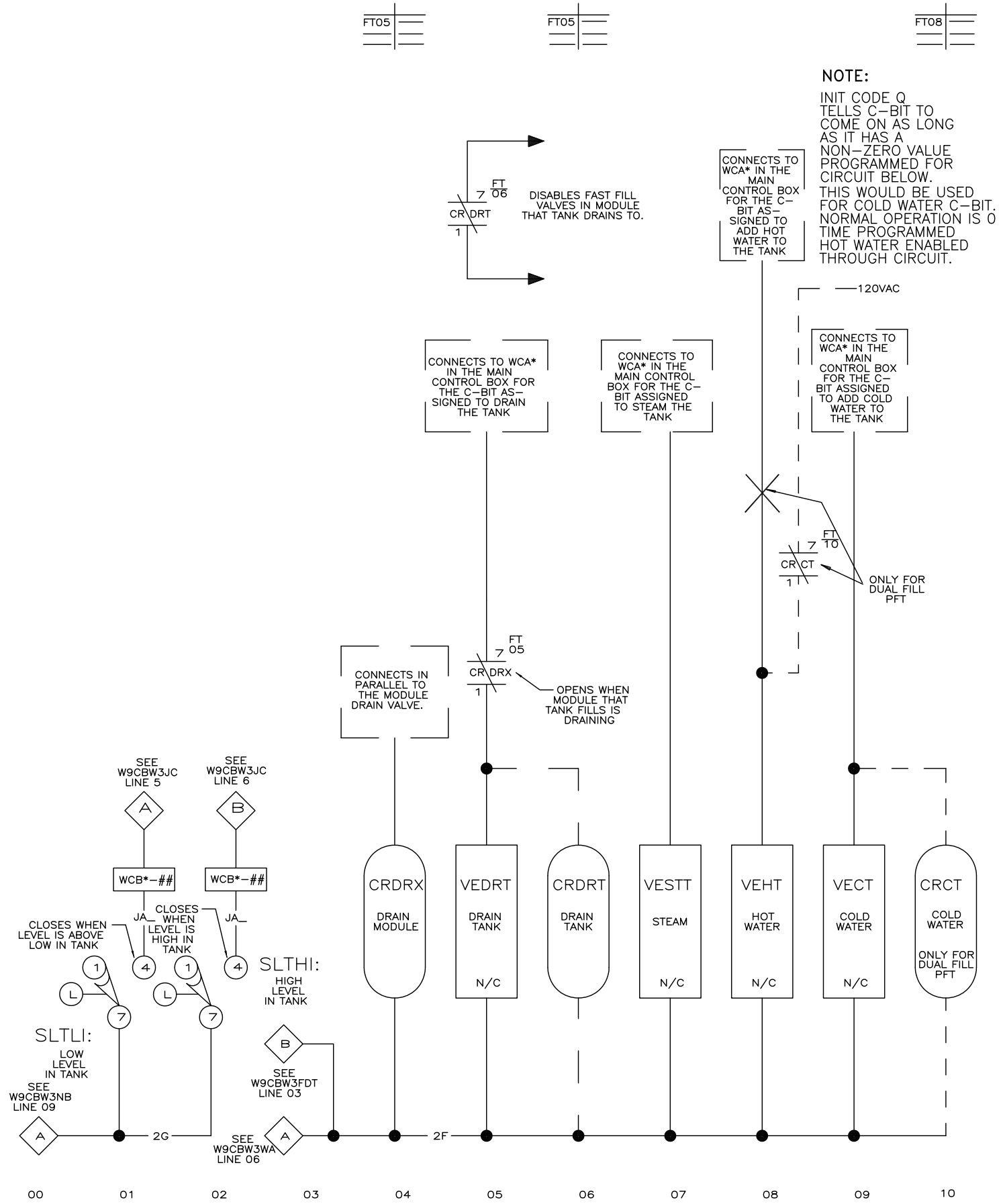
FT05
FT05
FT08
NOTE:
INIT CODE Q TELLS C–BIT TO COME ON AS LONG AS IT HAS A NON–ZERO VALUE PROGRAMMED FOR CIRCUIT BELOW.
THIS WOULD BE USED FOR COLD WATER C–BIT. NORMAL OPERATION IS 0 TIME PROGRAMMED HOT WATER ENABLED THROUGH CIRCUIT.
FT 06
7
CR DRT
1
DISABLES FAST FILL VALVES IN MODULE THAT TANK DRAINS TO.
CONNECTS TO WCA* IN THE MAIN CONTROL BOX FOR THE C–BIT AS–SIGNED TO ADD HOT WATER TO THE TANK
120VAC
CONNECTS TO WCA* IN THE MAIN CONTROL BOX FOR THE C–BIT AS–SIGNED TO DRAIN THE TANK
CONNECTS TO WCA* IN THE MAIN CONTROL BOX FOR THE C–BIT ASSIGNED TO STEAM THE TANK
CONNECTS TO WCA* IN THE MAIN CONTROL BOX FOR THE C–BIT ASSIGNED TO ADD COLD WATER TO THE TANK
FT 10
7
CR CT
1
ONLY FOR DUAL FILL PFT
FT 05
7
CR DRX
1
OPENS WHEN MODULE THAT TANK FILLS IS DRAINING
CONNECTS IN PARALLEL TO THE MODULE DRAIN VALVE.
SEE W9CBW3JC LINE 5
SEE W9CBW3JC LINE 6
A
B
WCB*–##
WCB*–##
JA_
JA_
CLOSES WHEN LEVEL IS ABOVE LOW IN TANK
CLOSES WHEN LEVEL IS HIGH IN TANK
1
4
1
4
L
L
7
7
SLTHI:
HIGH LEVEL IN TANK
SLTLI:
LOW LEVEL IN TANK
SEE W9CBW3NB LINE 09
B
SEE W9CBW3FDT LINE 03
A
2G
SEE W9CBW3WA LINE 06
A
2F
CRDRX
DRAIN MODULE
VEDRT
DRAIN TANK
N/C
CRDRT
DRAIN TANK
VESTT
STEAM
N/C
VEHT
HOT WATER
N/C
VECT
COLD WATER
N/C
CRCT
COLD WATER
ONLY FOR DUAL FILL PFT
00
01
02
03
04
05
06
07
08
09
10
W9CBW3FT
2016494B

W9CBW3FT

G3 CBW SYSTEMS MARK 9
SCHEMATIC: OVERHEAD OR DUAL PFT FILL
110V1P50HZ/120V1P60HZ
PELLERIN MILNOR CORPORATION

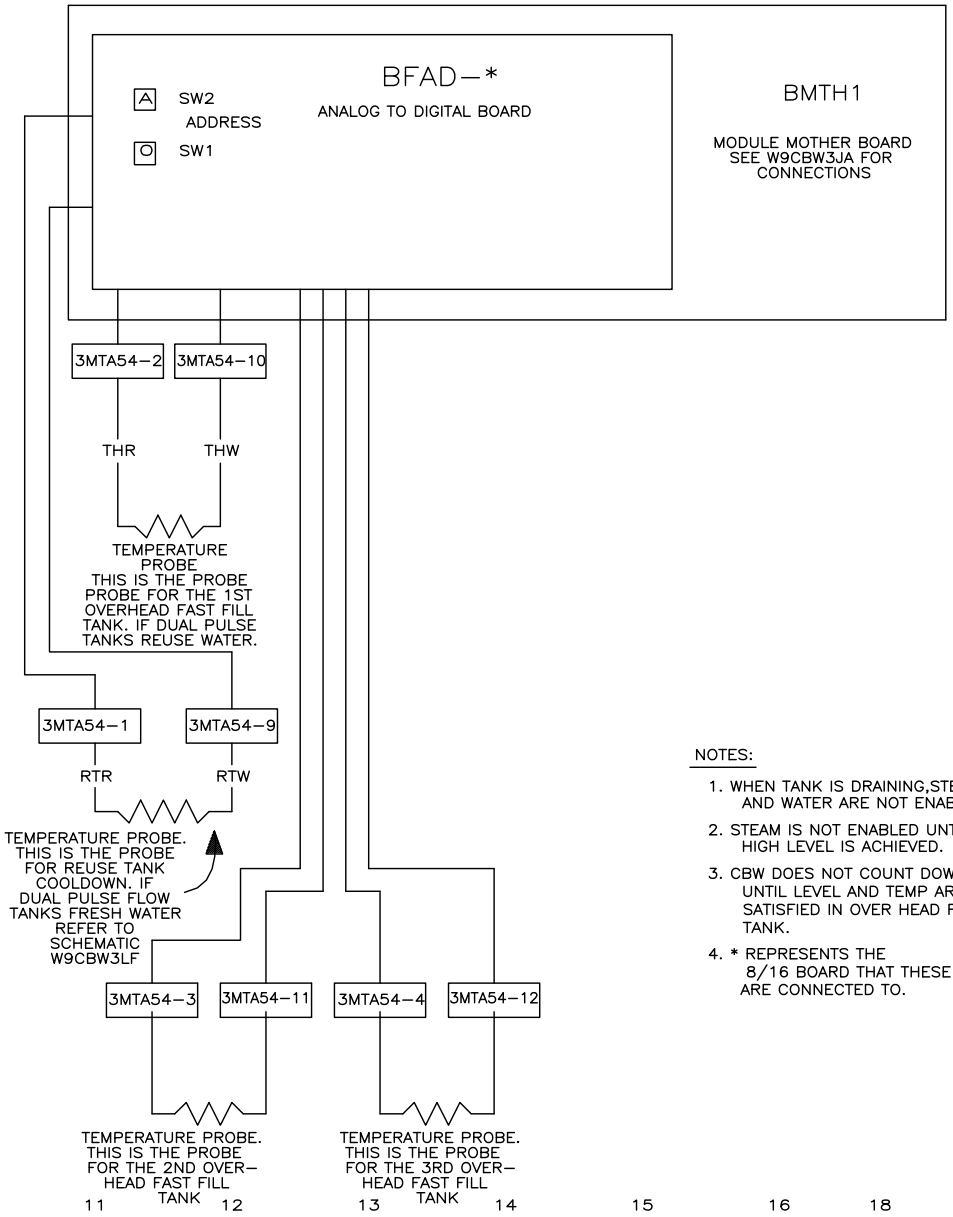

NOTES:

1. WHEN TANK IS DRAINING,STEAM AND WATER ARE NOT ENABLED.
2. STEAM IS NOT ENABLED UNTIL HIGH LEVEL IS ACHIEVED.
3. CBW DOES NOT COUNT DOWN UNTIL LEVEL AND TEMP ARE SATISFIED IN OVER HEAD FILL TANK.
4. * REPRESENTS THE 8/16 BOARD THAT THESE INPUTS ARE CONNECTED TO.

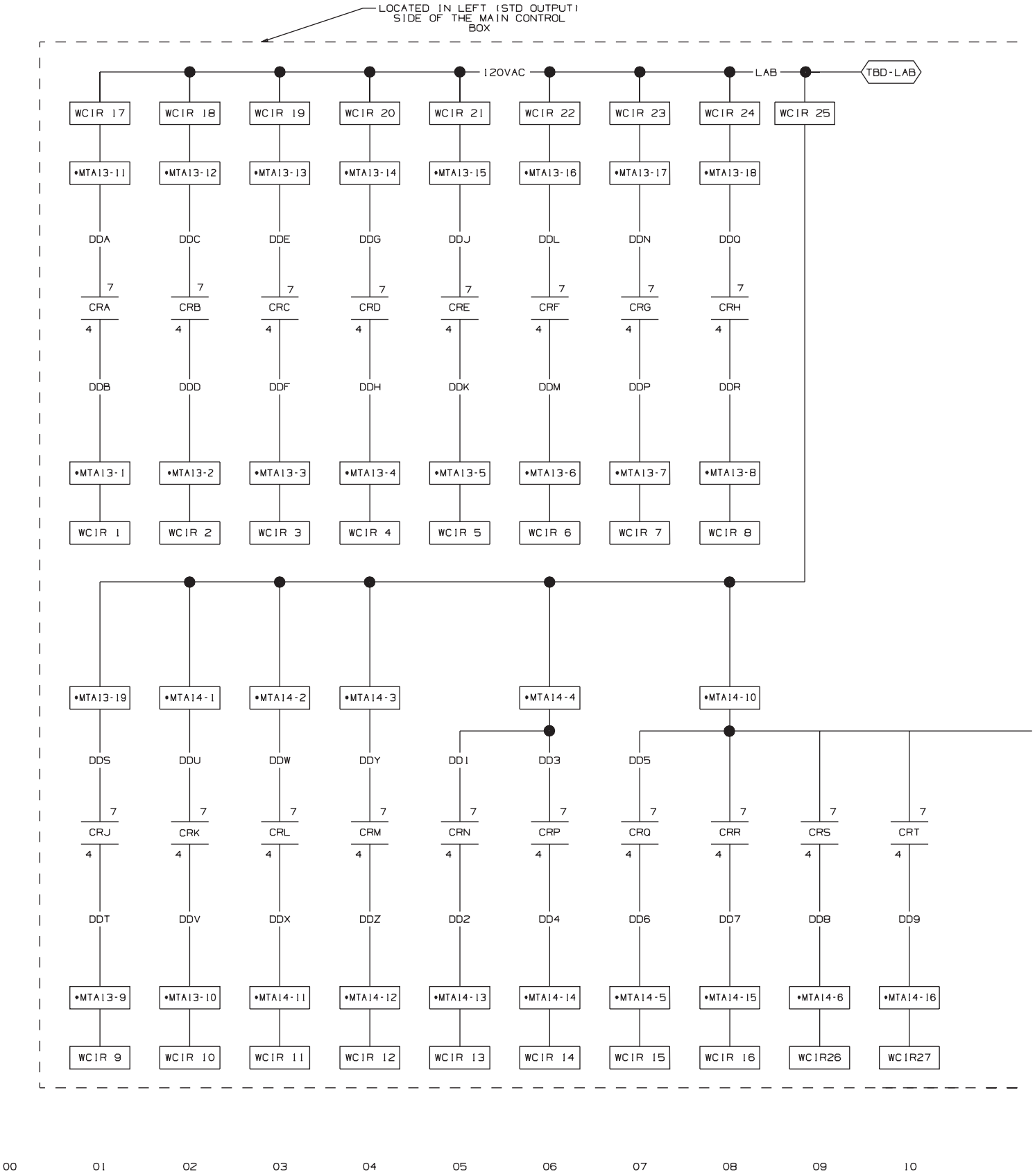

W9CBW31A
99286B

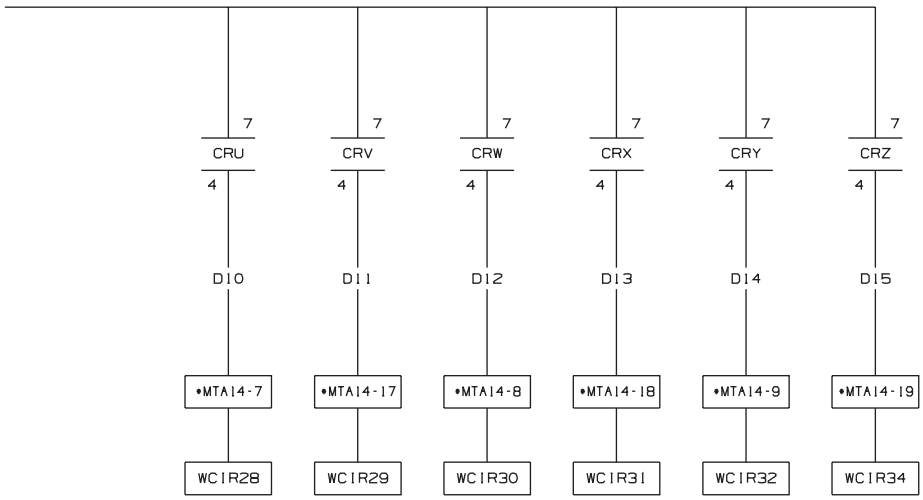

• DENOTES THE 24 OUTPUT BOARD ADDRESS SEE SCHEMATIC W9CBW3JA

W9CBW31A

G3 CBW SYSTEM MARK 9 SCHEMATIC: INTERPRET RELAY

PELLERIN MILNOR CORPORATION

NOTES:

1. WCIR CABLES TO THE WCIR IN THE LEFT (STANDARD OUTPUT) SIDE OF THE MAIN CONTROL BOX.
2. IF THE 2ND 24 OUTPUT BOARD IS USED:
   - A) RELAYS CHANGE FROM CRI TO CRJ.
   - B) TBL CHANGES TO TBM.
   - C) TB2 CHANGES TO TB4.
   - D) TB3 CHANGES TO TB5.
   - E) WCIR CHANGE TO WCJR.
   - F) WIRE NUMBERS BEGINNING WITH 0 BECOME 1, WIRE NUMBERS BEGINNING WITH D BECOME E.

11 12 13 14 15 16 17 19

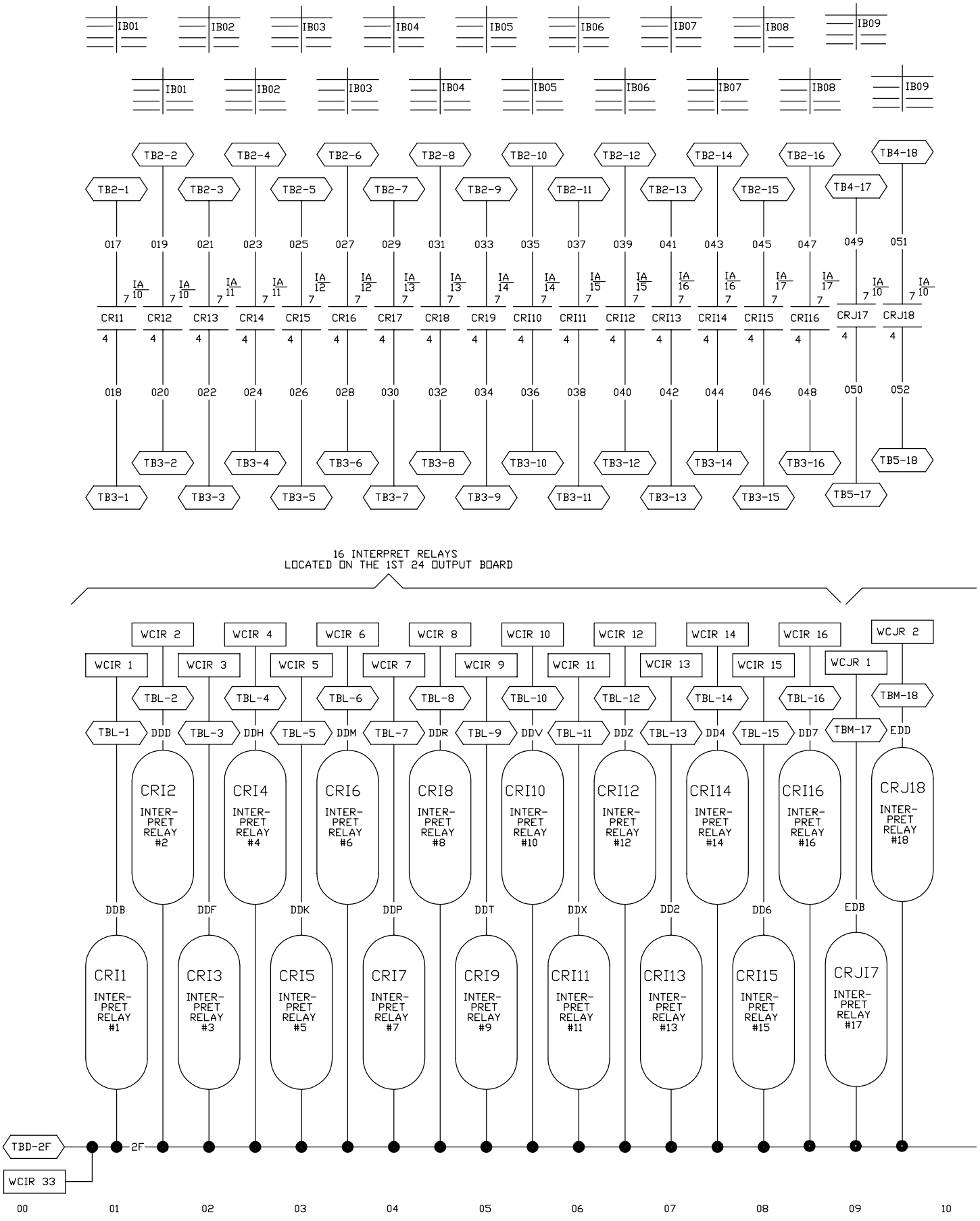

W9CBW3IB
2004364B

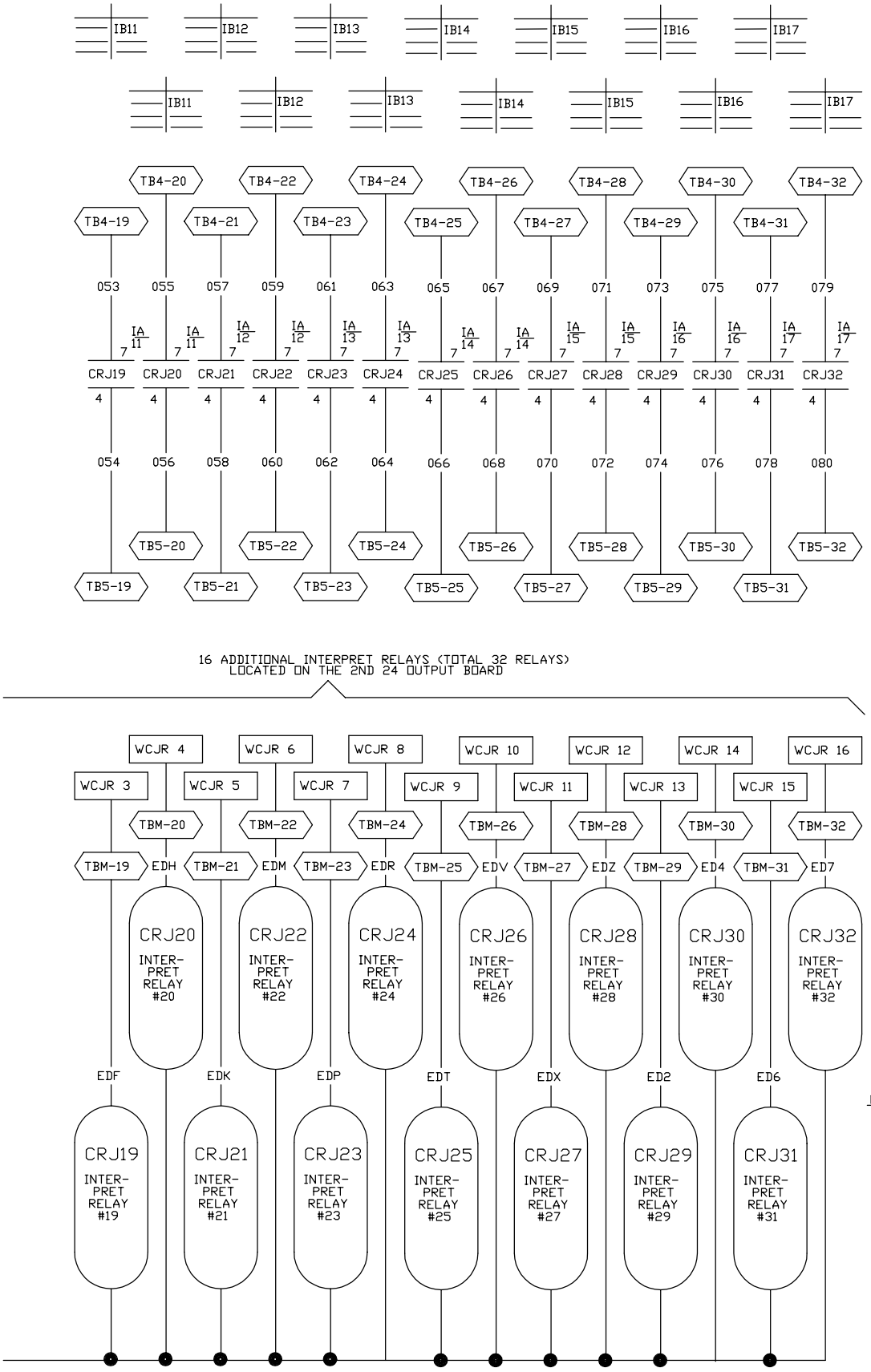

W9CBW3IB

G3 CBW SYSTEM MARK 9

SCHEMATIC: INTERPRET RELAY

PELLERIN MILNOR CORPORATION

NOTES:

1. WCIR CABLES TO THE WCIR IN THE LEFT (STANDARD OUTPUT) SIDE OF THE MAIN CONTROL BOX.
2. IF THE 2ND 24 OUTPUT BOARD IS USED:
   - A) RELAYS CHANGE FROM CRI TO CRJ.
   - B) TBL CHANGES TO TBM.
   - C) TB2 CHANGES TO TB4.
   - D) TB3 CHANGES TO TB5.
   - E) WCIR CHANGE TO WCJR.

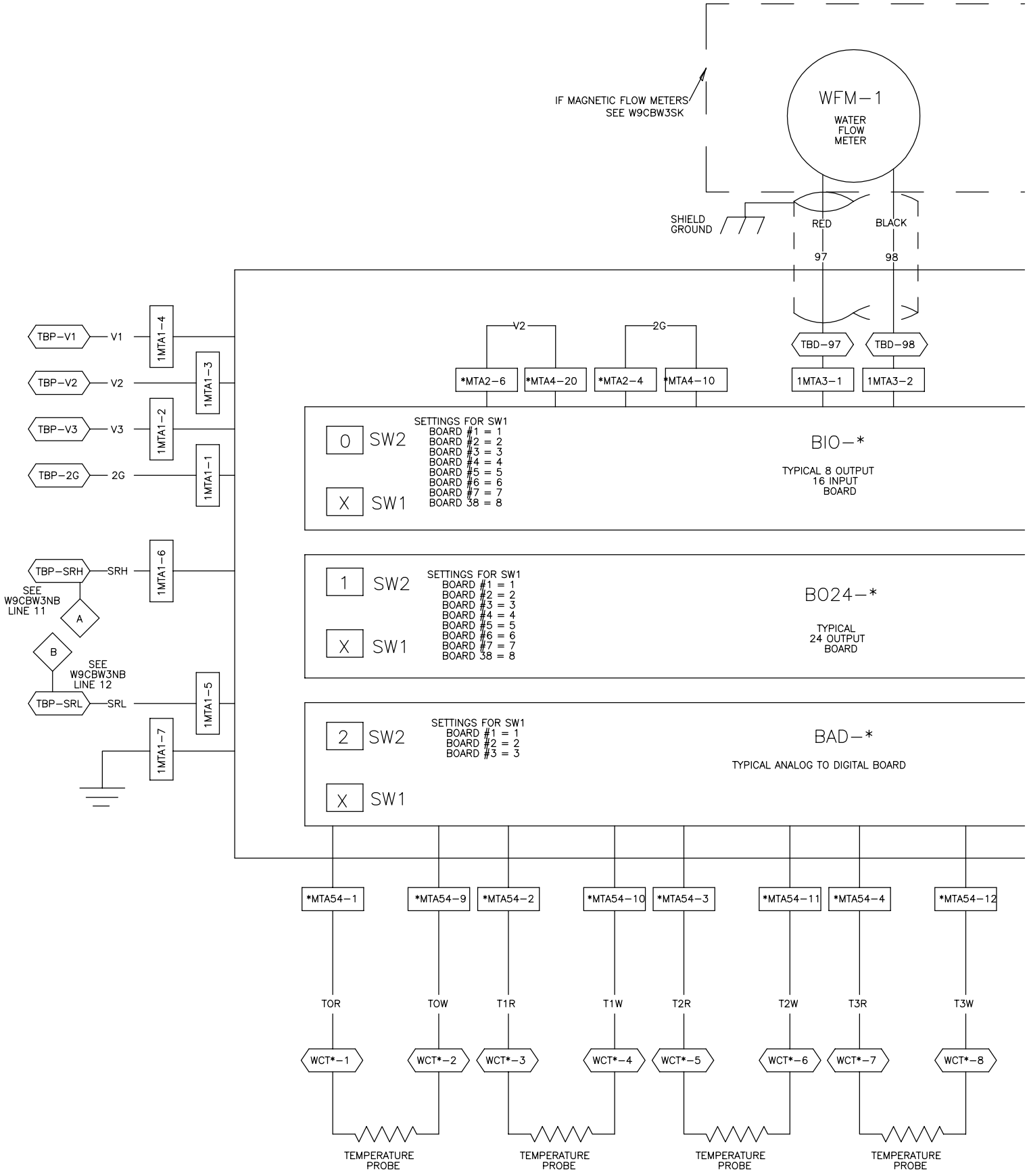

1ST A–D BOARD FOR MODULE 1–8	MODULE 1	MODULE 2	MODULE 3	MODULE 4
2ND A–D BOARD FOR MODULE 9–16	MODULE 9	MODULE 10	MODULE 11	MODULE 12
3RD A–D BOARD FOR MODULE 17–20	MODULE 17	MODULE 18	MODULE 19	MODULE 20

00 01 02 03 04 05 06 07 08 09

W9CBW3JA
2011432B

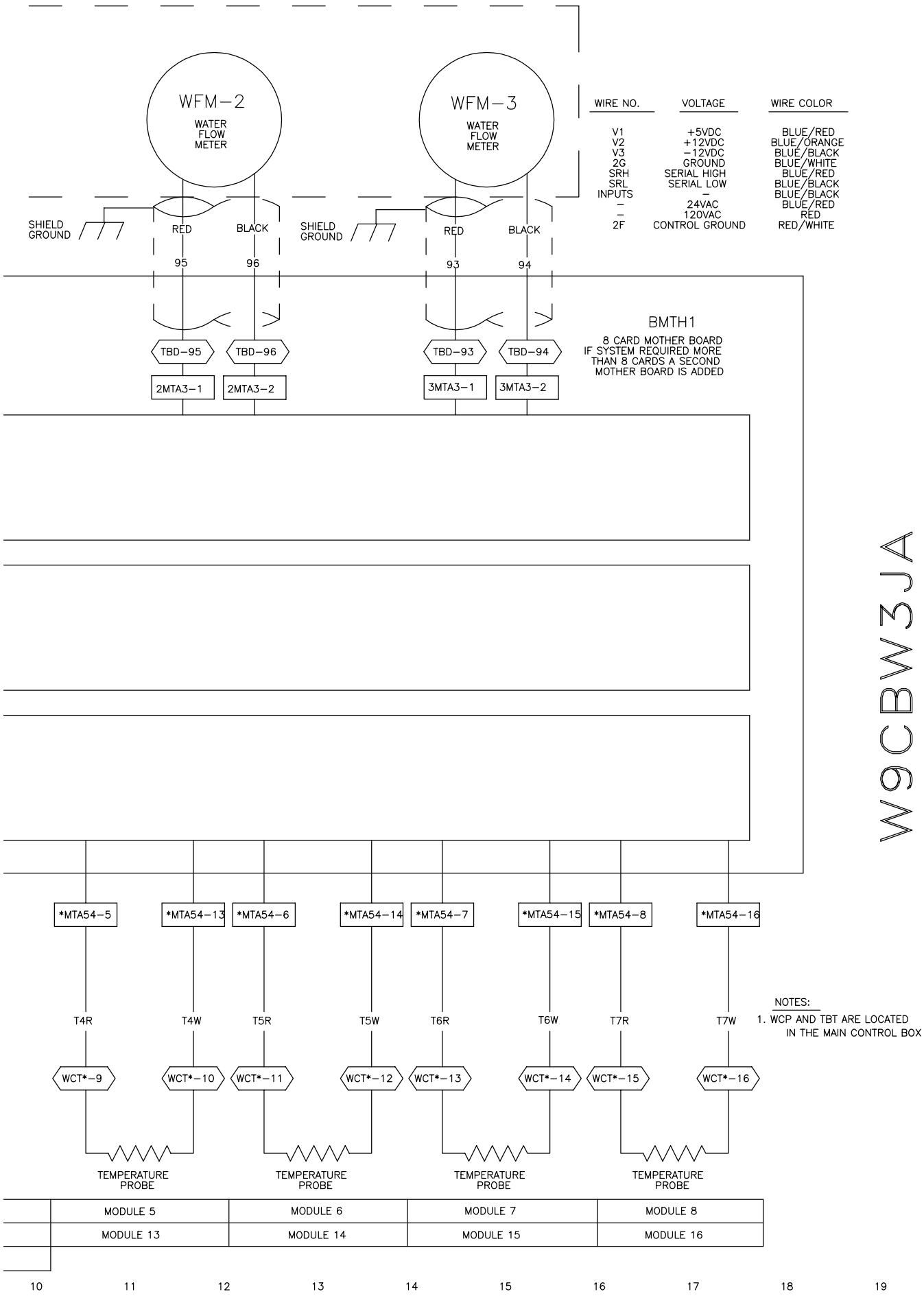

WIRE NO.	VOLTAGE	WIRE COLOR
V1	+5VDC	BLUE/RED
V2	+12VDC	BLUE/ORANGE
V3	–12VDC	BLUE/BLACK
2G	GROUND	BLUE/WHITE
SRH	SERIAL HIGH	BLUE/RED
SRL	SERIAL LOW	BLUE/BLACK
INPUTS	–	BLUE/BLACK
–	24VAC	BLUE/RED
–	120VAC	RED
2F	CONTROL GROUND	RED/WHITE

NOTES:
1. WCP AND TBT ARE LOCATED IN THE MAIN CONTROL BOX

W9CBW3JA

G3 CBW SYSTEMS MARK 9

SCHEMATIC: MODULE CONTROLS BOARD WIRING

PELLERIN MILNOR CORPORATION

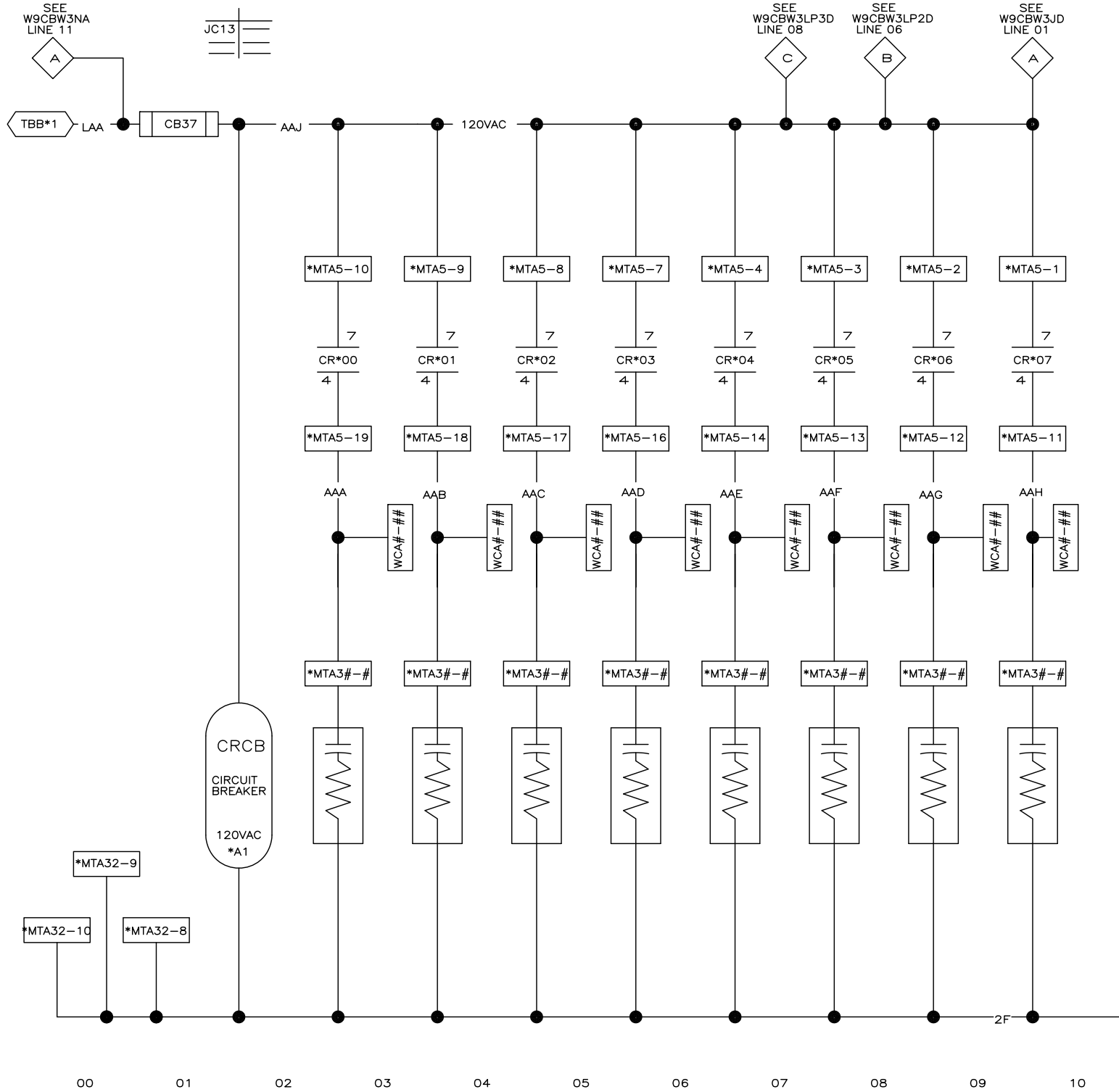

W9CBW3JB
2023202B

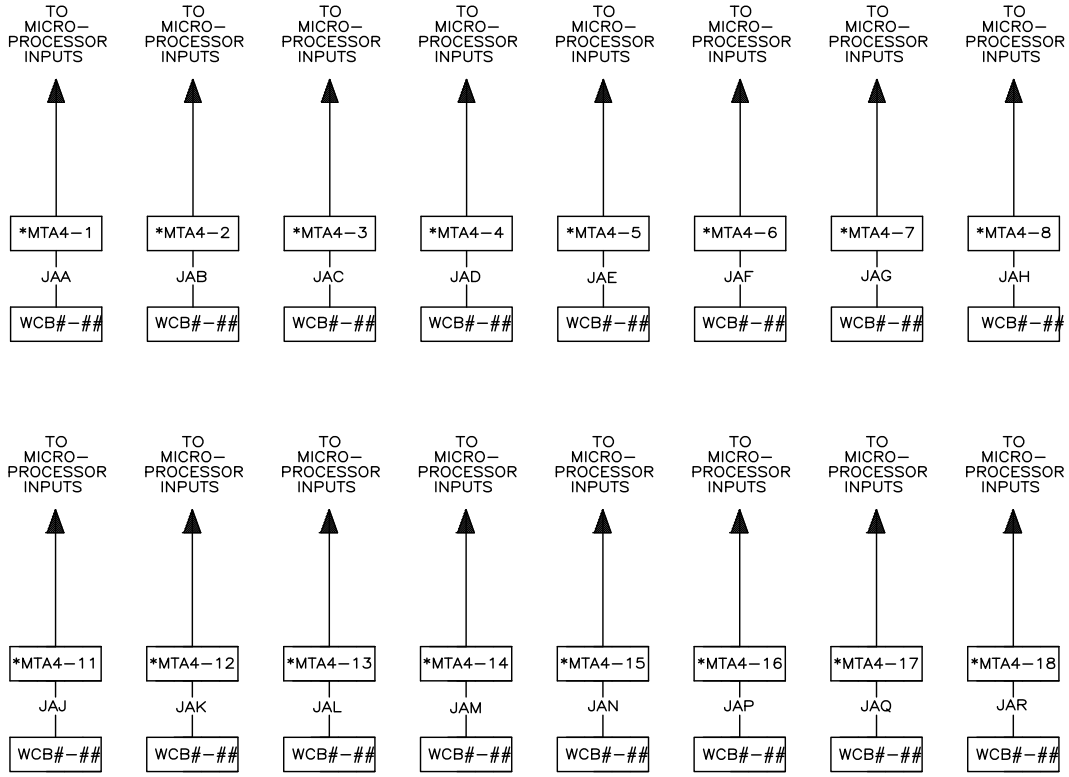

W9CBW3JB

G3 CBW SYSTEMS MARK 9

PELLERIN MILNOR CORPORATION

SCHEMATIC: TYPICAL 8/16 BOARD INPUTS/OUTPUT

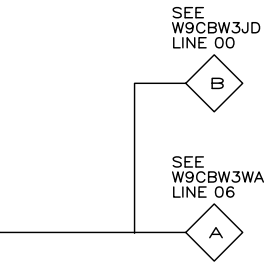

NOTE:
1. THE * REPRESENTS THE NUMBER OF THE 8/16 BOARD THE CONNECTION IS ON.
2. WCA# AND WCB# ARE LOCATED IN THE RIGHT (MOD ULE) SIDE OF THE MAIN CONTROL BOX.
3. THE # REPRESENTS THE CONNECTOR AND PIN NUMBER EACH INPUT/OUTPUT IS ASSIGNED TO.

11 12 13 14 15 16 17 18 19

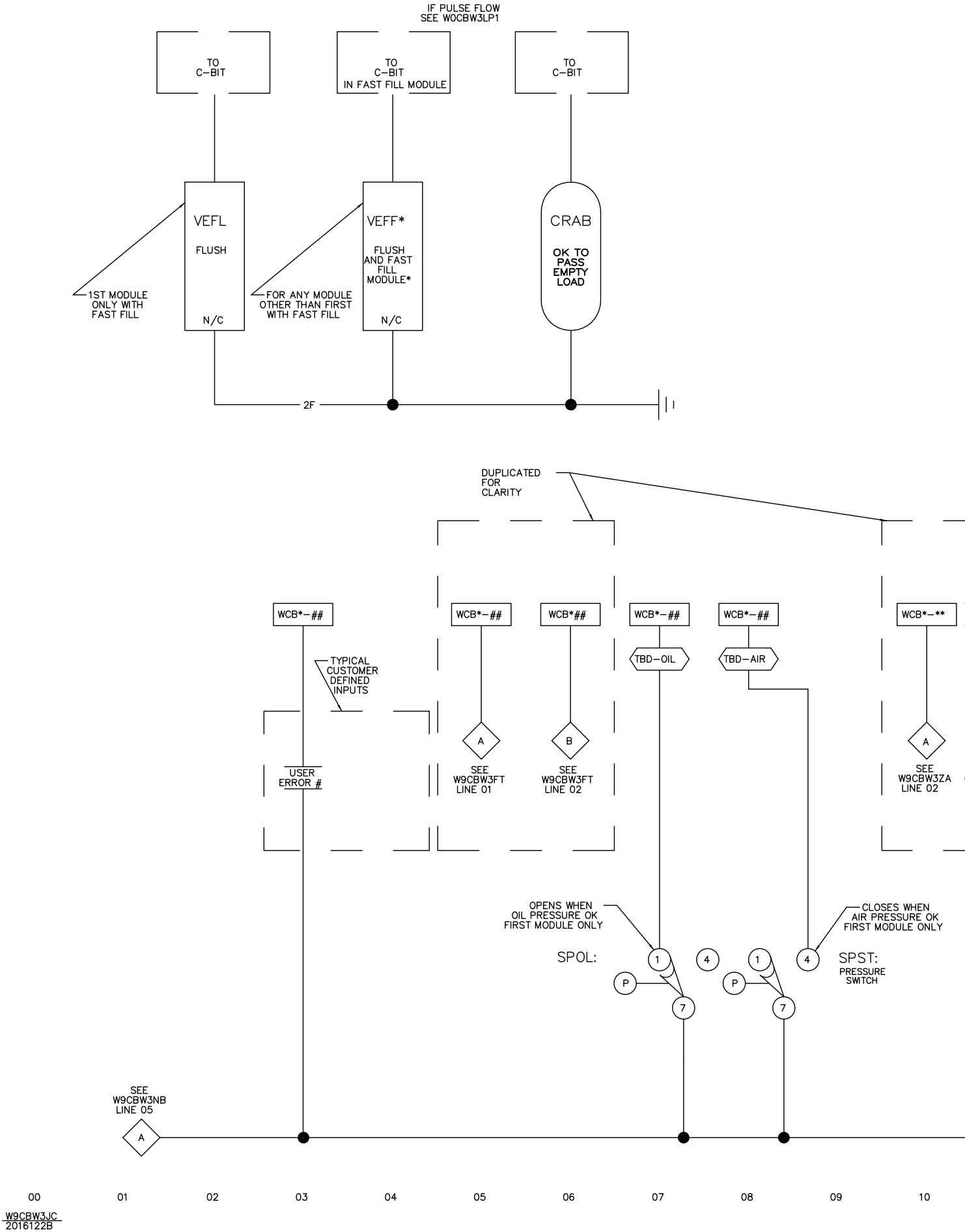
IF PULSE FLOW
SEE W0CBW3LP1
TO
C–BIT
TO
C–BIT
IN FAST FILL MODULE
TO
C–BIT
VEFL
FLUSH
N/C
VEFF*
FLUSH
AND FAST
FILL
MODULE*
N/C
CRAB
OK TO
PASS
EMPTY
LOAD
1ST MODULE
ONLY WITH
FAST FILL
FOR ANY MODULE
OTHER THAN FIRST
WITH FAST FILL
2F
I
DUPLICATED
FOR
CLARITY
WCB*–##
WCB*–##
WCB*##
WCB*–##
WCB*–##
WCB*–**
TBD–OIL
TBD–AIR
TYPICAL
CUSTOMER
DEFINED
INPUTS
A
B
A
USER
ERROR #
SEE
W9CBW3FT
LINE 01
SEE
W9CBW3FT
LINE 02
SEE
W9CBW3ZA
LINE 02
OPENS WHEN
OIL PRESSURE OK
FIRST MODULE ONLY
CLOSES WHEN
AIR PRESSURE OK
FIRST MODULE ONLY
SPOL:
SPST:
PRESSURE
SWITCH
1
4
1
4
P
P
7
7
SEE
W9CBW3NB
LINE 05
A
00
01
02
03
04
05
06
07
08
09
10
W9CBW3JC
2016122B

W9CBW3JC
2016122B

NOTE:
1. THE * REPRESENTS THE NUMBER OF THE 8/16 BOARD THE INPUT IS ASSIGNED TO
2. THE ## REPRESENTS THE INPUT NUMBER ON EACH 8/16 BOARD THAT THE INPUT IS ASSIGNED TO.
3. WCB* IS LOCATED ON THE RIGHT (MODULE) SIDE OF THE MAIN CONTROL BOX.

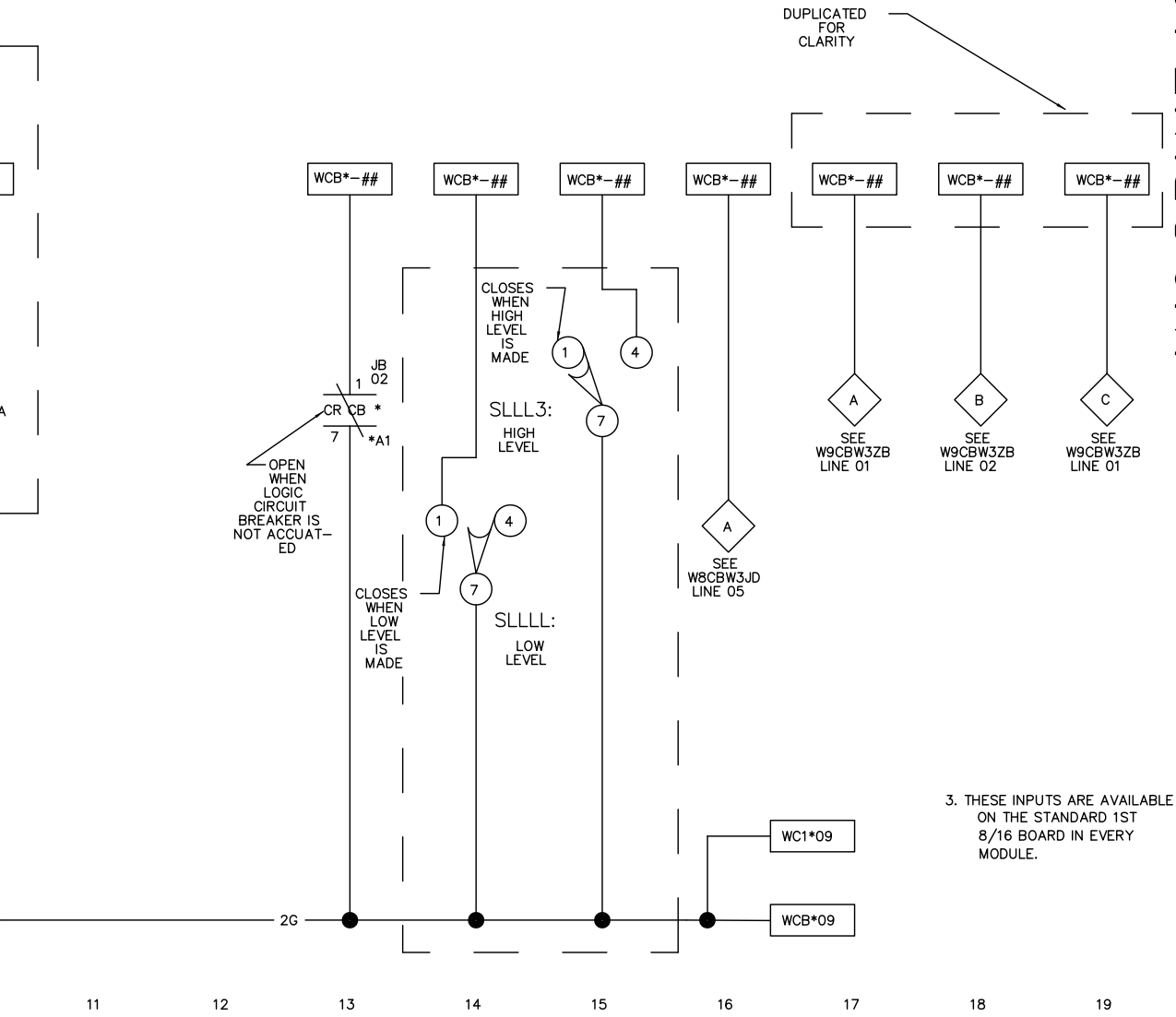

3. THESE INPUTS ARE AVAILABLE ON THE STANDARD 1ST 8/16 BOARD IN EVERY MODULE.

W9CBW3JC
2016122B

W9CBW3JC
G3 CBW SYSTEMS MARK 9
SCHEMATIC: MODULE INPUTS/OUTPUTS

PELLERIN MILNOR CORPORATION

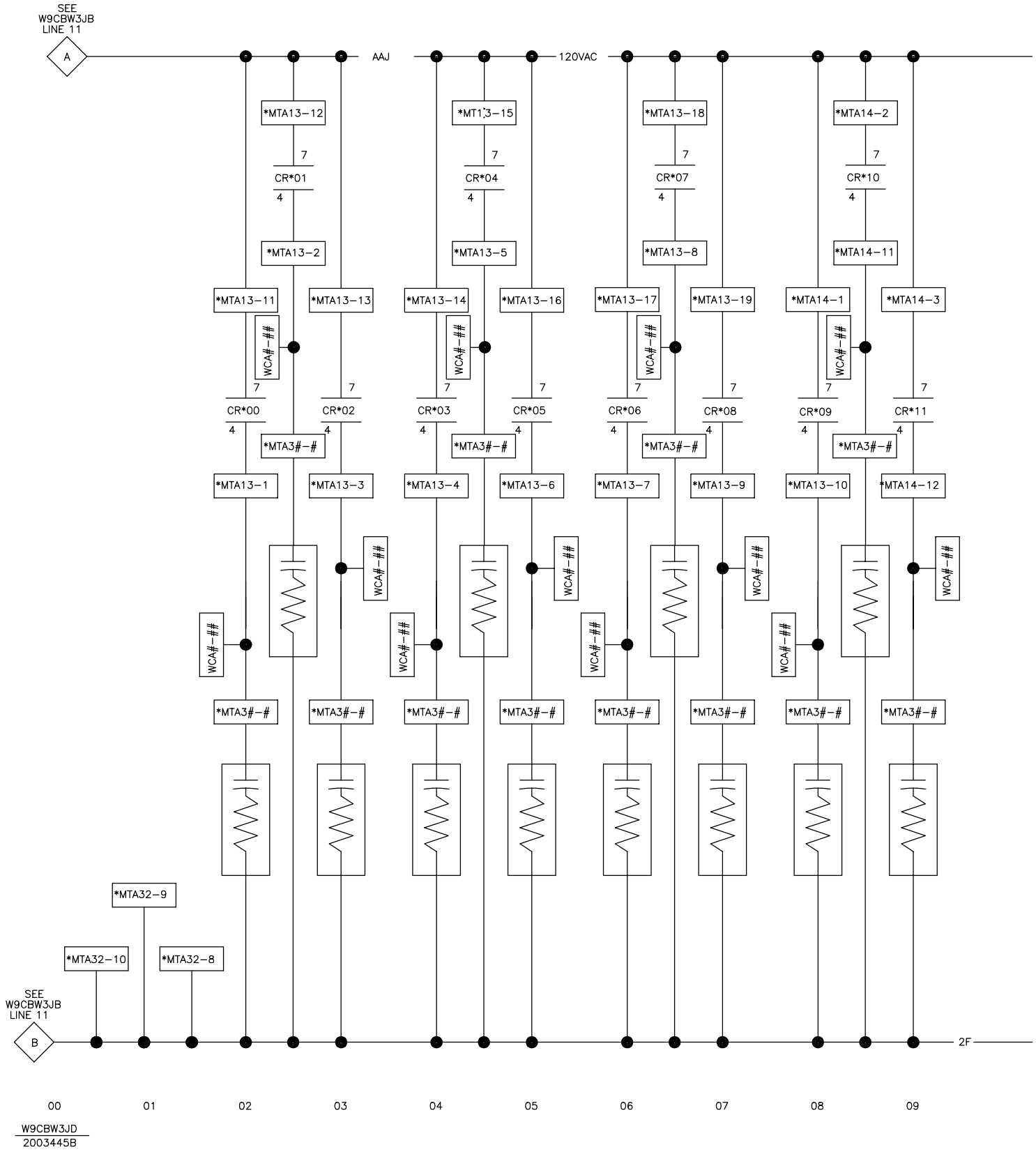
SEE
W9CBW3JB
LINE 11
A
AAJ
120VAC
*MTA13–12
*MT13–15
*MTA13–18
*MTA14–2
7
CR*01
4
CR*04
CR*07
CR*10
*MTA13–2
*MTA13–5
*MTA13–8
*MTA14–11
*MTA13–11
*MTA13–13
*MTA13–14
*MTA13–16
*MTA13–17
*MTA13–19
*MTA14–1
*MTA14–3
WCA#–##
CR*00
CR*02
CR*03
CR*05
CR*06
CR*08
CR*09
CR*11
*MTA3#–#
*MTA13–1
*MTA13–3
*MTA13–4
*MTA13–6
*MTA13–7
*MTA13–9
*MTA13–10
*MTA14–12
*MTA32–9
*MTA32–10
*MTA32–8
SEE
W9CBW3JB
LINE 11
B
2F
00
01
02
03
04
05
06
07
08
09
W9CBW3JD
2003445B

NOTE:
1.THE * REPRESENTS THE NUMBER OF THE 24 BOARD THE CONNECTION IS ON.
2.WCA# ARE LOCATED IN THE OF THE MAIN RIGHT (MODULE) SIDE CONTROL BOX.
3. THE # REPRESENTS THE CONNECTOR AND PIN NUMBER EACH OUTPUT IS ASSIGNED TO.

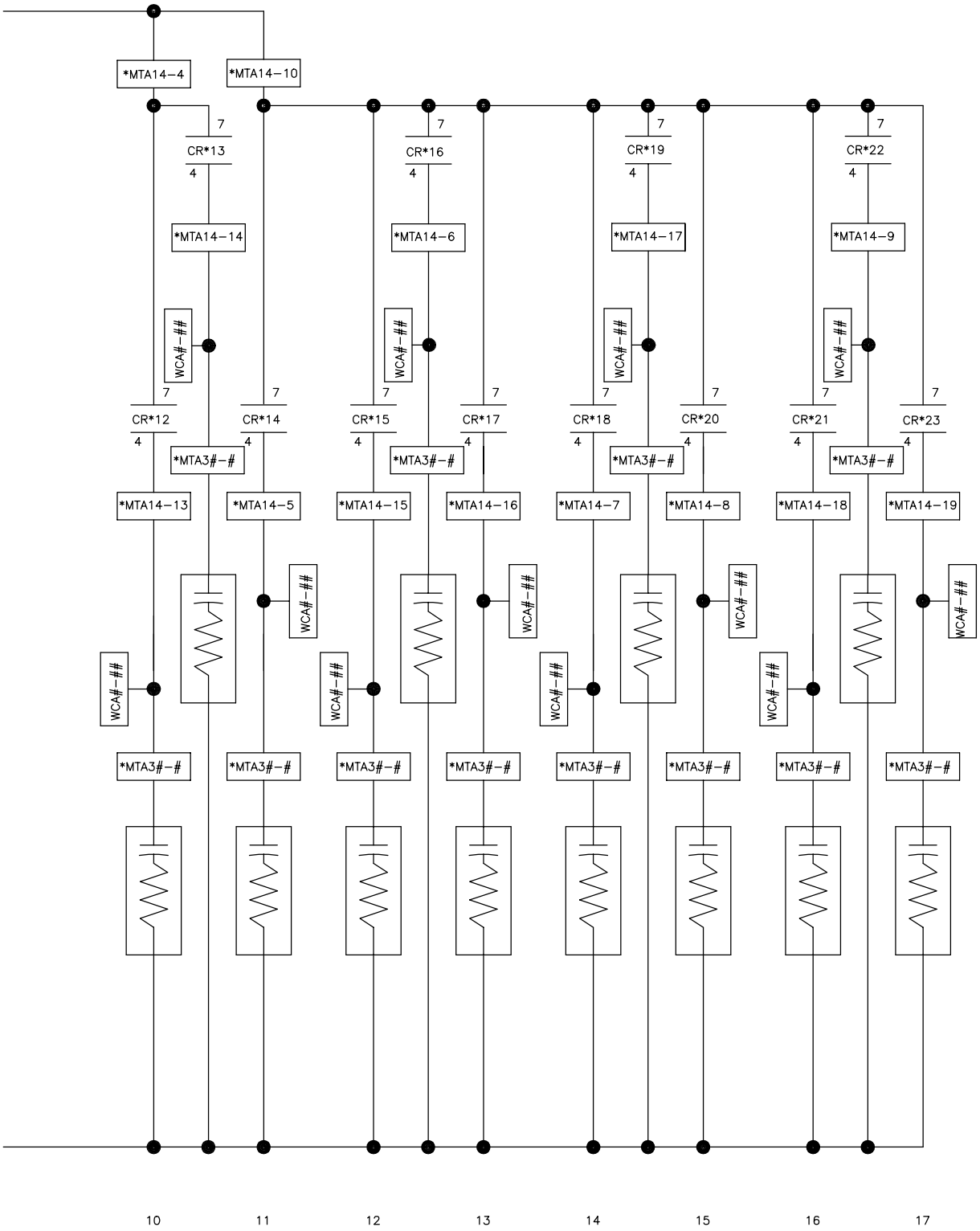

W9CBW3JD

G3 CBW SYSTEMS MARK 9

SCHEMATIC: TYPICAL 24 OUTPUT BOARD WIRING

PELLERIN MILNOR CORPORATION

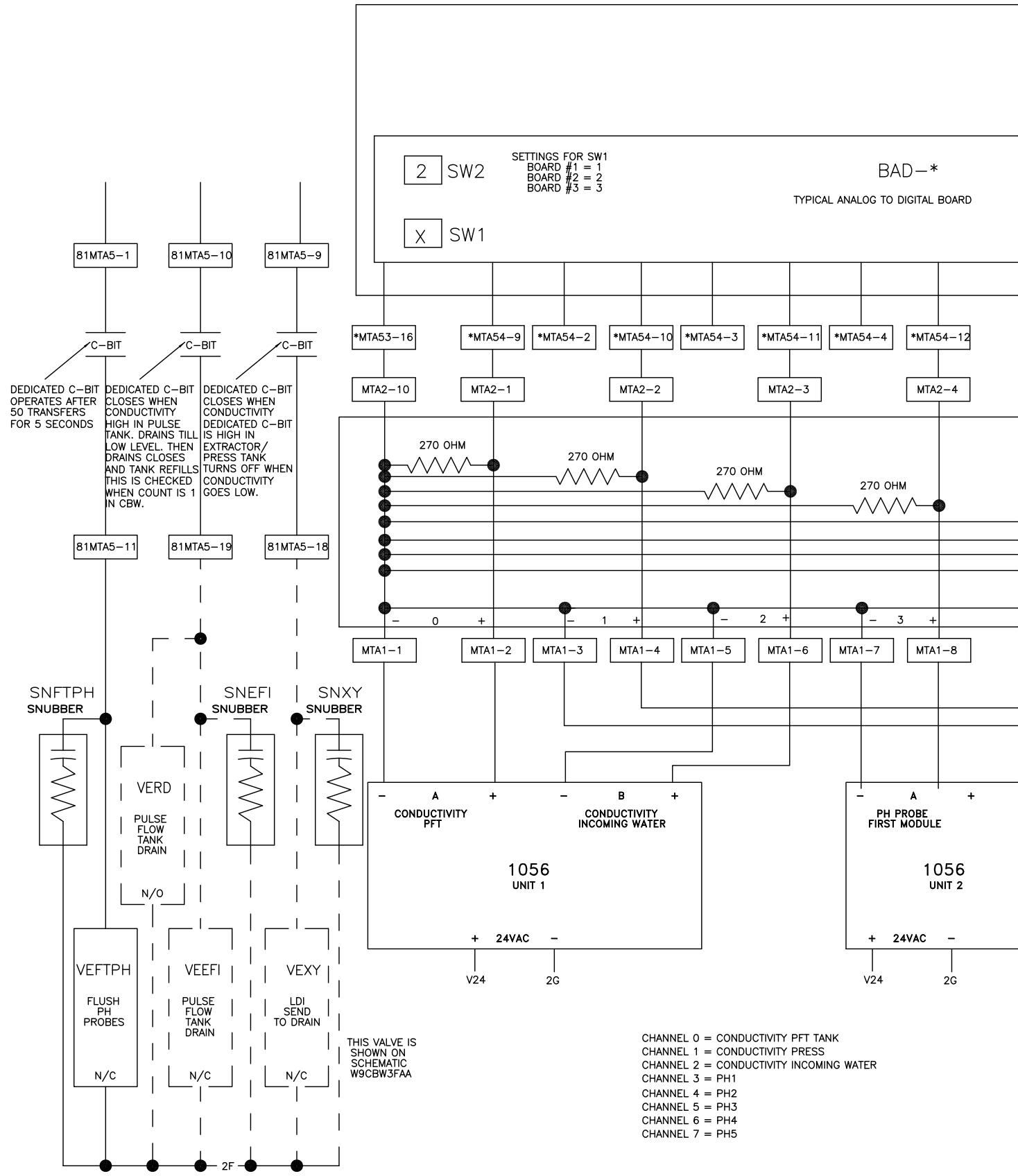
2 SW2
X SW1
SETTINGS FOR SW1
BOARD #1 = 1
BOARD #2 = 2
BOARD #3 = 3
BAD–*
TYPICAL ANALOG TO DIGITAL BOARD
81MTA5–1
81MTA5–10
81MTA5–9
C–BIT
C–BIT
C–BIT
DEDICATED C–BIT OPERATES AFTER 50 TRANSFERS FOR 5 SECONDS
DEDICATED C–BIT CLOSES WHEN CONDUCTIVITY HIGH IN PULSE TANK. DRAINS TILL LOW LEVEL. THEN DRAINS CLOSES AND TANK REFILLS THIS IS CHECKED WHEN COUNT IS 1 IN CBW.
DEDICATED C–BIT CLOSES WHEN CONDUCTIVITY DEDICATED C–BIT IS HIGH IN EXTRACTOR/ PRESS TANK TURNS OFF WHEN CONDUCTIVITY GOES LOW.
81MTA5–11
81MTA5–19
81MTA5–18
*MTA53–16
*MTA54–9
*MTA54–2
*MTA54–10
*MTA54–3
*MTA54–11
*MTA54–4
*MTA54–12
MTA2–10
MTA2–1
MTA2–2
MTA2–3
MTA2–4
270 OHM
270 OHM
270 OHM
270 OHM
– 0 +
– 1 +
– 2 +
– 3 +
MTA1–1
MTA1–2
MTA1–3
MTA1–4
MTA1–5
MTA1–6
MTA1–7
MTA1–8
SNFTPH
SNUBBER
SNEFI
SNUBBER
SNXY
SNUBBER
VERD
PULSE FLOW TANK DRAIN
N/O
– A +
CONDUCTIVITY PFT
– B +
CONDUCTIVITY INCOMING WATER
1056
UNIT 1
+ 24VAC –
V24
2G
– A +
PH PROBE FIRST MODULE
1056
UNIT 2
+ 24VAC –
V24
2G
VEFTPH
FLUSH PH PROBES
N/C
VEEFI
PULSE FLOW TANK DRAIN
N/C
VEXY
LDI SEND TO DRAIN
N/C
THIS VALVE IS SHOWN ON SCHEMATIC W9CBW3FAA
2F
CHANNEL 0 = CONDUCTIVITY PFT TANK
CHANNEL 1 = CONDUCTIVITY PRESS
CHANNEL 2 = CONDUCTIVITY INCOMING WATER
CHANNEL 3 = PH1
CHANNEL 4 = PH2
CHANNEL 5 = PH3
CHANNEL 6 = PH4
CHANNEL 7 = PH5
00
01
02
03
04
05
06
07
08
09
W9CBW3JE
2016033B

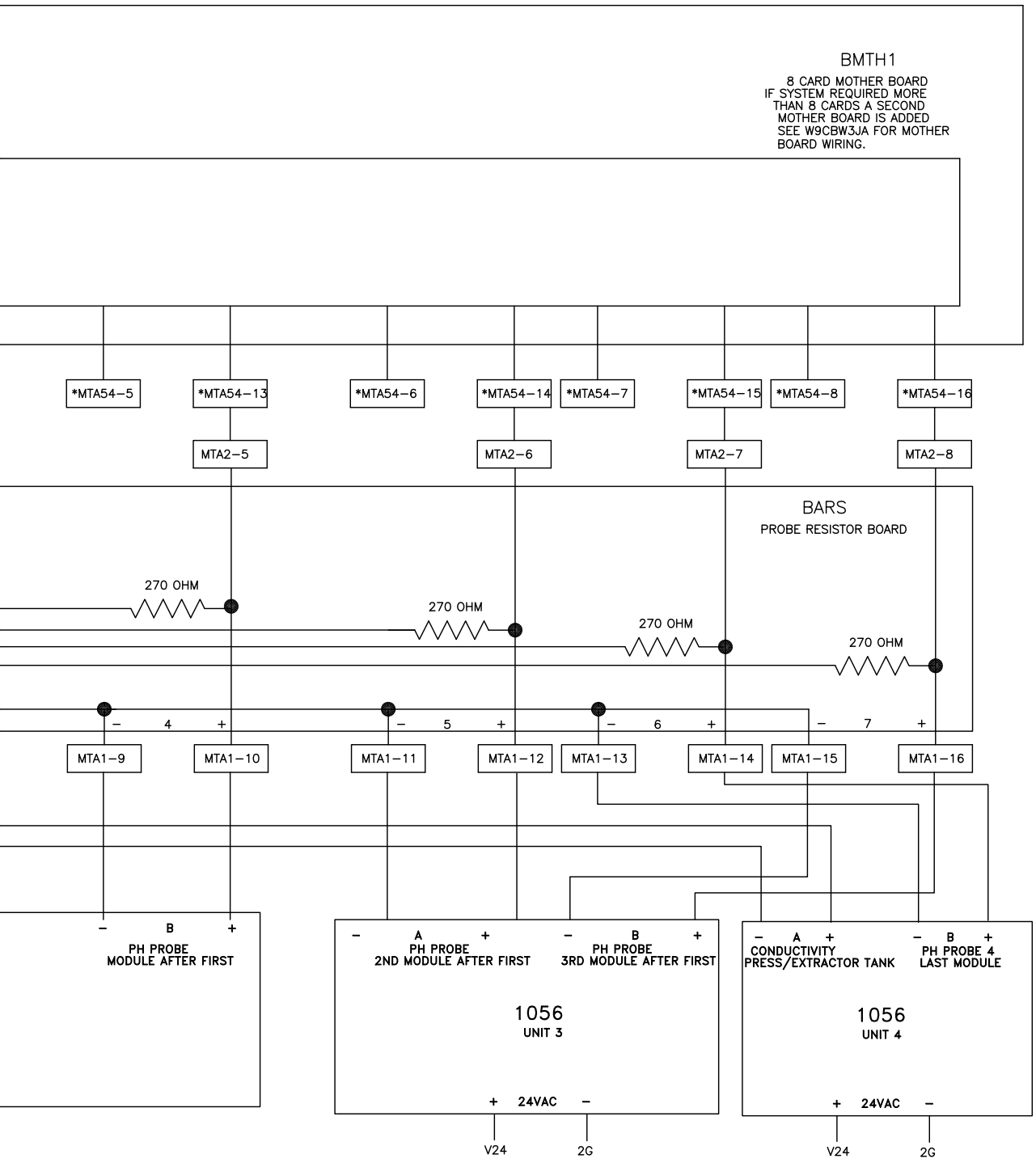

W9CBW3JE

G3 CBW SYSTEMS MARK 9

SCHEMATIC: CONDUCTIVITY/PH PROBE WIRING

PELLERIN MILNOR CORPORATION

10 11 12 13 14 15 16 17 18 19

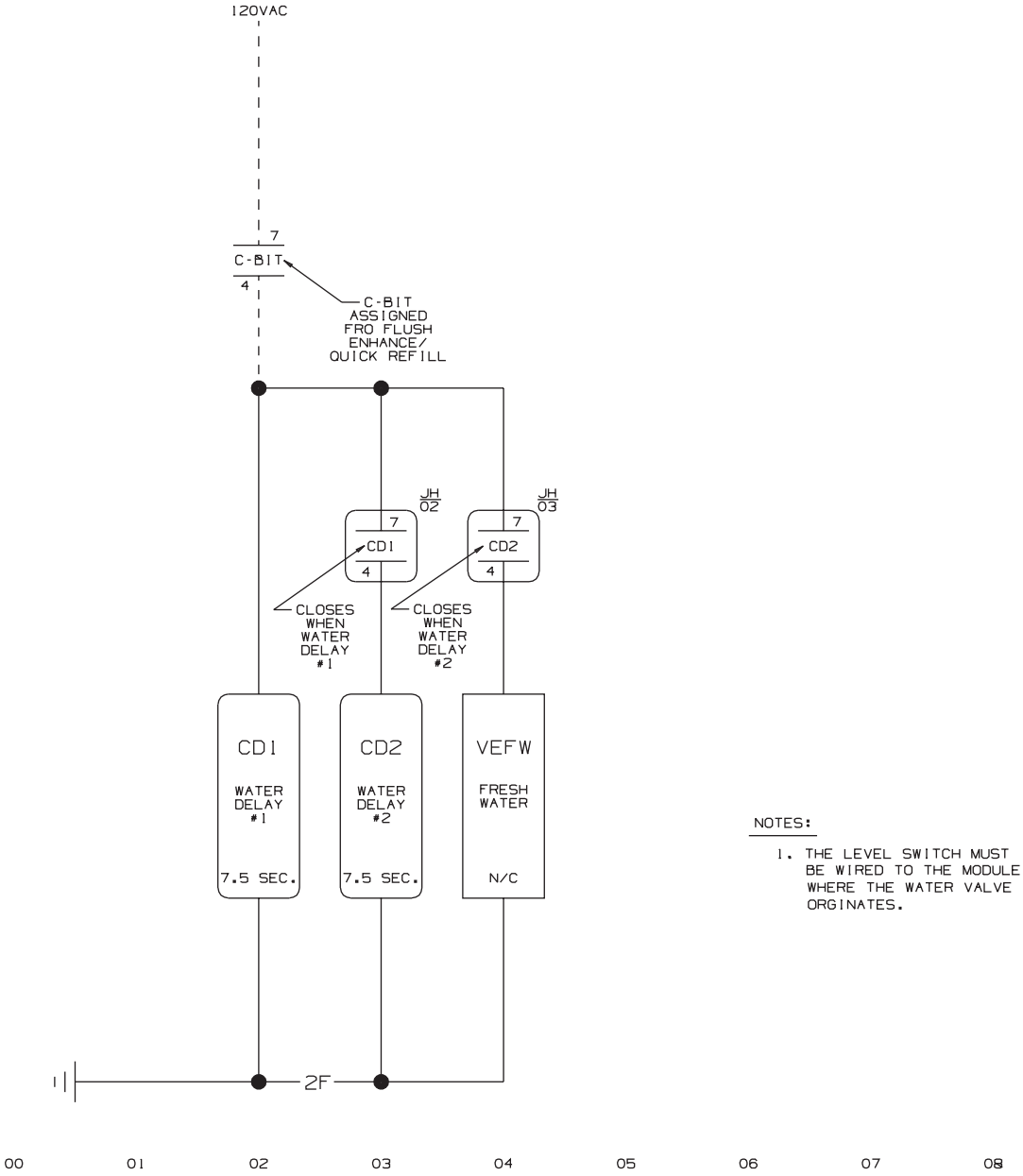

NOTES:

1. THE LEVEL SWITCH MUST BE WIRED TO THE MODULE WHERE THE WATER VALVE ORGINATES.

W9CBW3JH
99133B

W9CBW3JH

SCHEMATIC: FLUSH ENHANCE/QUICK REFILL

(WHERE THE LEVEL SWITCH IS IN MODULE A
AND THE WATER VALVE IS IN MODULE B)

PELLERIN MILNOR CORPORATION

W9CBW3JH
99133B

W9CBW3JH
99133B

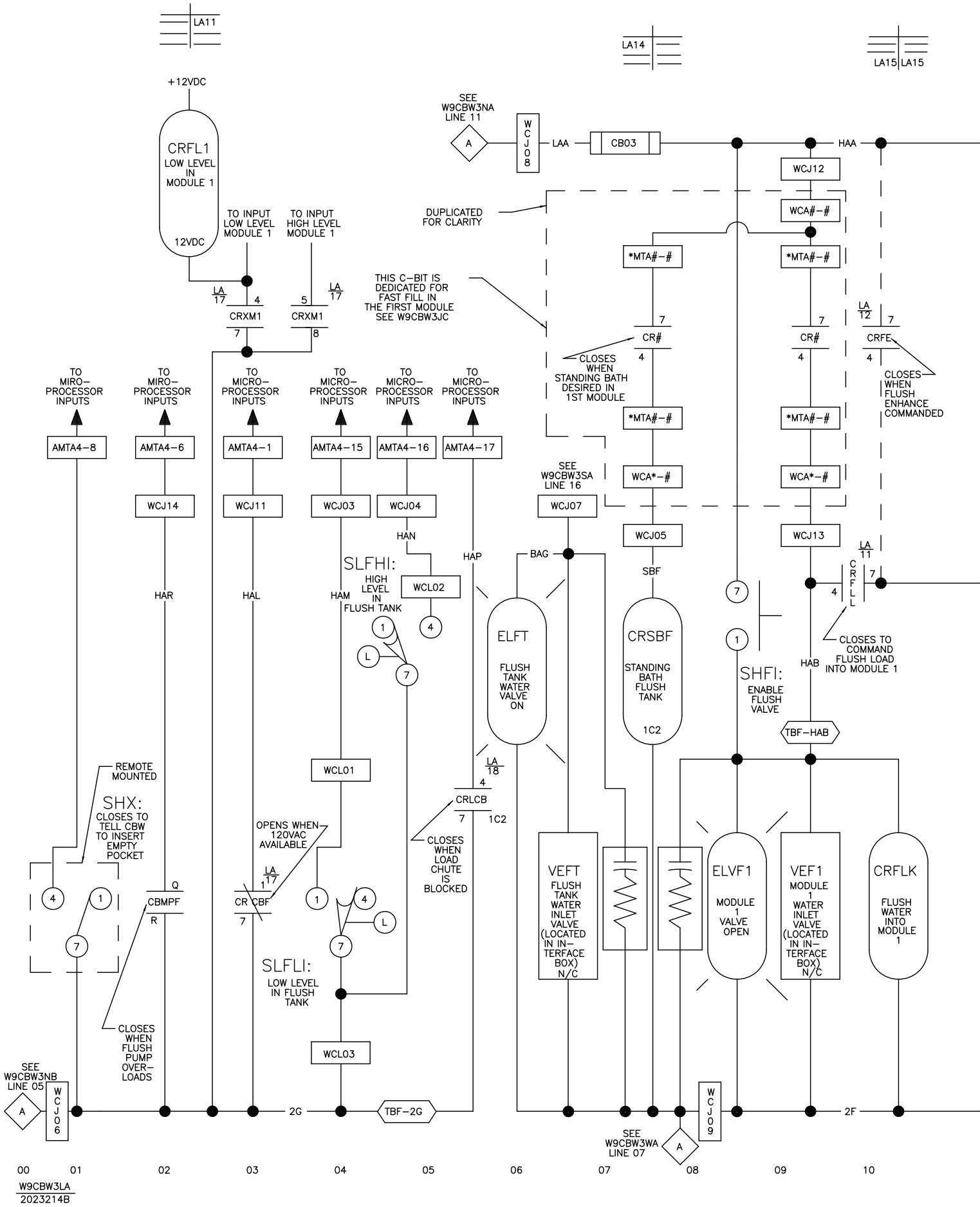
LA11
LA14
LA15 LA15
+12VDC
CRFL1
LOW LEVEL IN MODULE 1
12VDC
TO INPUT LOW LEVEL MODULE 1
TO INPUT HIGH LEVEL MODULE 1
SEE W9CBW3NA LINE 11
WCJ08
LAA
CB03
HAA
WCJ12
DUPLICATED FOR CLARITY
WCA#-#
*MTA#-#
THIS C-BIT IS DEDICATED FOR FAST FILL IN THE FIRST MODULE SEE W9CBW3JC
CRXM1
CR#
CRFE
CLOSES WHEN STANDING BATH DESIRED IN 1ST MODULE
CLOSES WHEN FLUSH ENHANCE COMMANDED
TO MIRO-PROCESSOR INPUTS
TO MICRO-PROCESSOR INPUTS
AMTA4-8
AMTA4-6
AMTA4-1
AMTA4-15
AMTA4-16
AMTA4-17
WCA*-#
SEE W9CBW3SA LINE 16
WCJ07
WCJ14
WCJ11
WCJ03
WCJ04
WCJ05
WCJ13
HAN
HAP
BAG
SBF
HAR
HAL
HAM
HAB
SLFHI: HIGH LEVEL IN FLUSH TANK
WCL02
ELFT
FLUSH TANK WATER VALVE ON
CRSBF
STANDING BATH FLUSH TANK
1C2
CRFLL
CLOSES TO COMMAND FLUSH LOAD INTO MODULE 1
SHFI: ENABLE FLUSH VALVE
TBF-HAB
REMOTE MOUNTED
SHX: CLOSES TO TELL CBW TO INSERT EMPTY POCKET
WCL01
CRLCB
OPENS WHEN 120VAC AVAILABLE
CLOSES WHEN LOAD CHUTE IS BLOCKED
CBMPF
CR CBF
VEFT
FLUSH TANK WATER INLET VALVE (LOCATED IN IN-TERFACE BOX) N/C
ELVF1
MODULE 1 VALVE OPEN
VEF1
MODULE 1 WATER INLET VALVE (LOCATED IN IN-TERFACE BOX) N/C
CRFLK
FLUSH WATER INTO MODULE 1
SLFLI: LOW LEVEL IN FLUSH TANK
CLOSES WHEN FLUSH PUMP OVER-LOADS
WCL03
SEE W9CBW3NB LINE 05
WCJ06
2G
TBF-2G
2F
SEE W9CBW3WA LINE 07
WCJ09
00 01 02 03 04 05 06 07 08 09 10
W9CBW3LA
2023214B

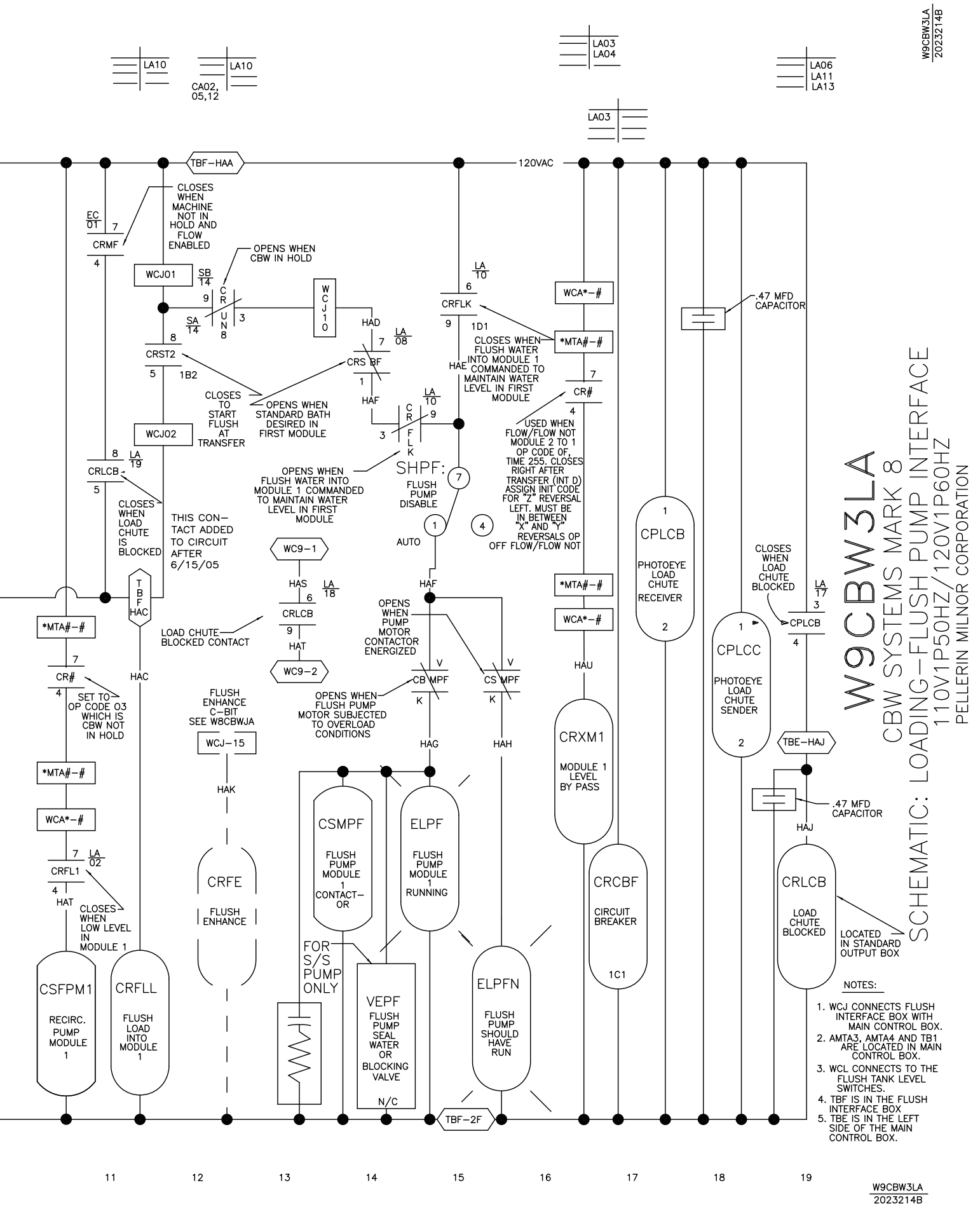
W9CBW3LA
2023214B
LA10
LA10
CA02, 05,12
LA03
LA04
LA03
LA06
LA11
LA13
TBF-HAA
120VAC
CLOSES WHEN MACHINE NOT IN HOLD AND FLOW ENABLED
EC 01
CRMF
WCJ01
SB 14
OPENS WHEN CBW IN HOLD
CR UN 8
SA 14
WCJ10
HAD
LA 08
CRS BF
CRST2
1B2
CLOSES TO START FLUSH AT TRANSFER
OPENS WHEN STANDARD BATH DESIRED IN FIRST MODULE
HAF
CR FLK
LA 10
WCJ02
CRLCB
LA 19
CLOSES WHEN LOAD CHUTE IS BLOCKED
THIS CON-TACT ADDED TO CIRCUIT AFTER 6/15/05
OPENS WHEN FLUSH WATER INTO MODULE 1 COMMANDED TO MAINTAIN WATER LEVEL IN FIRST MODULE
SHPF:
FLUSH PUMP DISABLE
AUTO
LA 10
CRFLK
1D1
HAE
CLOSES WHEN FLUSH WATER INTO MODULE 1 COMMANDED TO MAINTAIN WATER LEVEL IN FIRST MODULE
WCA*-#
*MTA#-#
CR#
USED WHEN FLOW/FLOW NOT MODULE 2 TO 1 OP CODE OF, TIME 255. CLOSES RIGHT AFTER TRANSFER (INT D) ASSIGN INIT CODE FOR "Z" REVERSAL LEFT. MUST BE IN BETWEEN "X" AND "Y" REVERSALS OP OFF FLOW/FLOW NOT
.47 MFD CAPACITOR
CPLCB
PHOTOEYE LOAD CHUTE RECEIVER
CPLCC
PHOTOEYE LOAD CHUTE SENDER
CLOSES WHEN LOAD CHUTE BLOCKED
LA 17
CPLCB
TBE-HAJ
.47 MFD CAPACITOR
HAJ
CRLCB
LOAD CHUTE BLOCKED
LOCATED IN STANDARD OUTPUT BOX
WC9-1
HAS
LA 18
CRLCB
HAT
WC9-2
LOAD CHUTE BLOCKED CONTACT
TBF HAC
HAC
OPENS WHEN PUMP MOTOR CONTACTOR ENERGIZED
CB MPF
CS MPF
OPENS WHEN FLUSH PUMP MOTOR SUBJECTED TO OVERLOAD CONDITIONS
HAG
HAH
HAU
CRXM1
MODULE 1 LEVEL BY PASS
CRCBF
CIRCUIT BREAKER
1C1
*MTA#-#
CR#
SET TO OP CODE 03 WHICH IS CBW NOT IN HOLD
FLUSH ENHANCE C-BIT SEE W8CBWJA
WCJ-15
HAK
CRFE
FLUSH ENHANCE
*MTA#-#
WCA*-#
CRFL1
LA 02
HAT
CLOSES WHEN LOW LEVEL IN MODULE 1
CSFPM1
RECIRC. PUMP MODULE 1
CRFLL
FLUSH LOAD INTO MODULE 1
CSMPF
FLUSH PUMP MODULE 1 CONTACT-OR
ELPF
FLUSH PUMP MODULE 1 RUNNING
FOR S/S PUMP ONLY
VEPF
FLUSH PUMP SEAL WATER OR BLOCKING VALVE
N/C
ELPFN
FLUSH PUMP SHOULD HAVE RUN
TBF-2F
W9CBW3LA
CBW SYSTEMS MARK 8
110V1P50HZ/120V1P60HZ
PELLERIN MILNOR CORPORATION
SCHEMATIC: LOADING-FLUSH PUMP INTERFACE
NOTES:
1. WCJ CONNECTS FLUSH INTERFACE BOX WITH MAIN CONTROL BOX.
2. AMTA3, AMTA4 AND TB1 ARE LOCATED IN MAIN CONTROL BOX.
3. WCL CONNECTS TO THE FLUSH TANK LEVEL SWITCHES.
4. TBF IS IN THE FLUSH INTERFACE BOX
5. TBE IS IN THE LEFT SIDE OF THE MAIN CONTROL BOX.
11
12
13
14
15
16
17
18
19
W9CBW3LA
2023214B

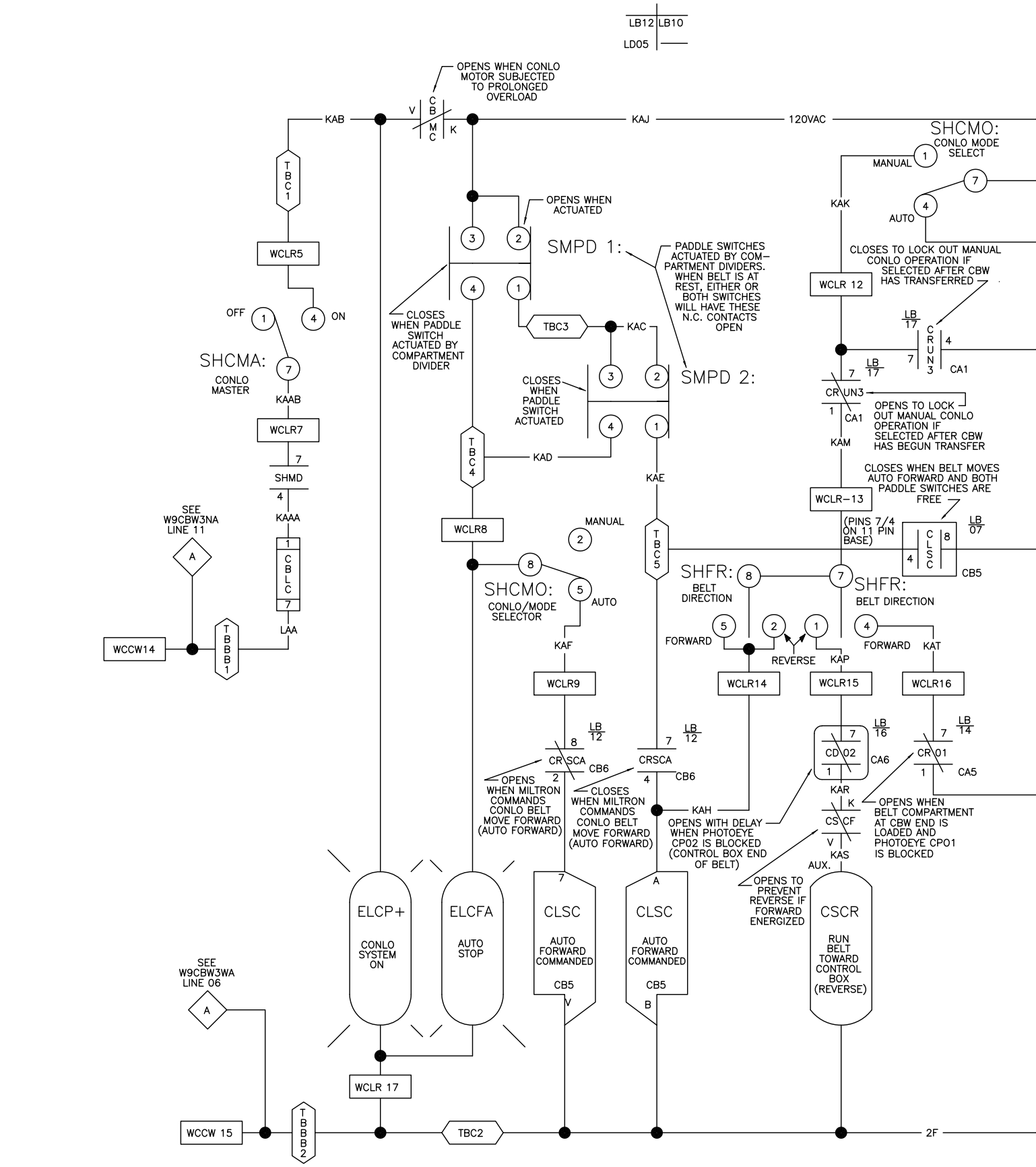
LB12 LB10
LD05
OPENS WHEN CONLO MOTOR SUBJECTED TO PROLONGED OVERLOAD
CBMC
KAB
KAJ
120VAC
TBC1
WCLR5
OFF
ON
SHCMA:
CONLO MASTER
KAAB
WCLR7
SHMD
KAAA
CBLC
LAA
SEE W9CBW3NA LINE 11
WCCW14
TBBB1
OPENS WHEN ACTUATED
SMPD 1:
PADDLE SWITCHES ACTUATED BY COM-PARTMENT DIVIDERS. WHEN BELT IS AT REST, EITHER OR BOTH SWITCHES WILL HAVE THESE N.C. CONTACTS OPEN
CLOSES WHEN PADDLE SWITCH ACTUATED BY COMPARTMENT DIVIDER
TBC3
KAC
CLOSES WHEN PADDLE SWITCH ACTUATED
SMPD 2:
TBC4
KAD
KAE
WCLR8
MANUAL
SHCMO:
CONLO/MODE SELECTOR
AUTO
KAF
WCLR9
TBC5
SHFR:
BELT DIRECTION
FORWARD
REVERSE
KAP
WCLR14
WCLR15
WCLR16
KAT
LB 12
CRSCA
CB6
OPENS WHEN MILTRON COMMANDS CONLO BELT MOVE FORWARD (AUTO FORWARD)
CLOSES WHEN MILTRON COMMANDS CONLO BELT MOVE FORWARD (AUTO FORWARD)
KAH
OPENS WITH DELAY WHEN PHOTOEYE CP02 IS BLOCKED (CONTROL BOX END OF BELT)
LB 16
CD02
CA6
KAR
CSCF
KAS
AUX.
OPENS TO PREVENT REVERSE IF FORWARD ENERGIZED
LB 14
CR01
CA5
OPENS WHEN BELT COMPARTMENT AT CBW END IS LOADED AND PHOTOEYE CP01 IS BLOCKED
SHCMO:
CONLO MODE SELECT
MANUAL
AUTO
KAK
WCLR 12
CLOSES TO LOCK OUT MANUAL CONLO OPERATION IF SELECTED AFTER CBW HAS TRANSFERRED
LB 17
CRUN3
CA1
OPENS TO LOCK OUT MANUAL CONLO OPERATION IF SELECTED AFTER CBW HAS BEGUN TRANSFER
KAM
WCLR-13
CLOSES WHEN BELT MOVES AUTO FORWARD AND BOTH PADDLE SWITCHES ARE FREE
(PINS 7/4 ON 11 PIN BASE)
LB 07
CLSC
CB5
ELCP+
CONLO SYSTEM ON
ELCFA
AUTO STOP
CLSC
AUTO FORWARD COMMANDED
CB5
CSCR
RUN BELT TOWARD CONTROL BOX (REVERSE)
SEE W9CBW3WA LINE 06
WCLR 17
WCCW 15
TBBB2
TBC2
2F
00
01
02
03
04
05
06
07
08
09
10
W9CBW3LB
2025142B

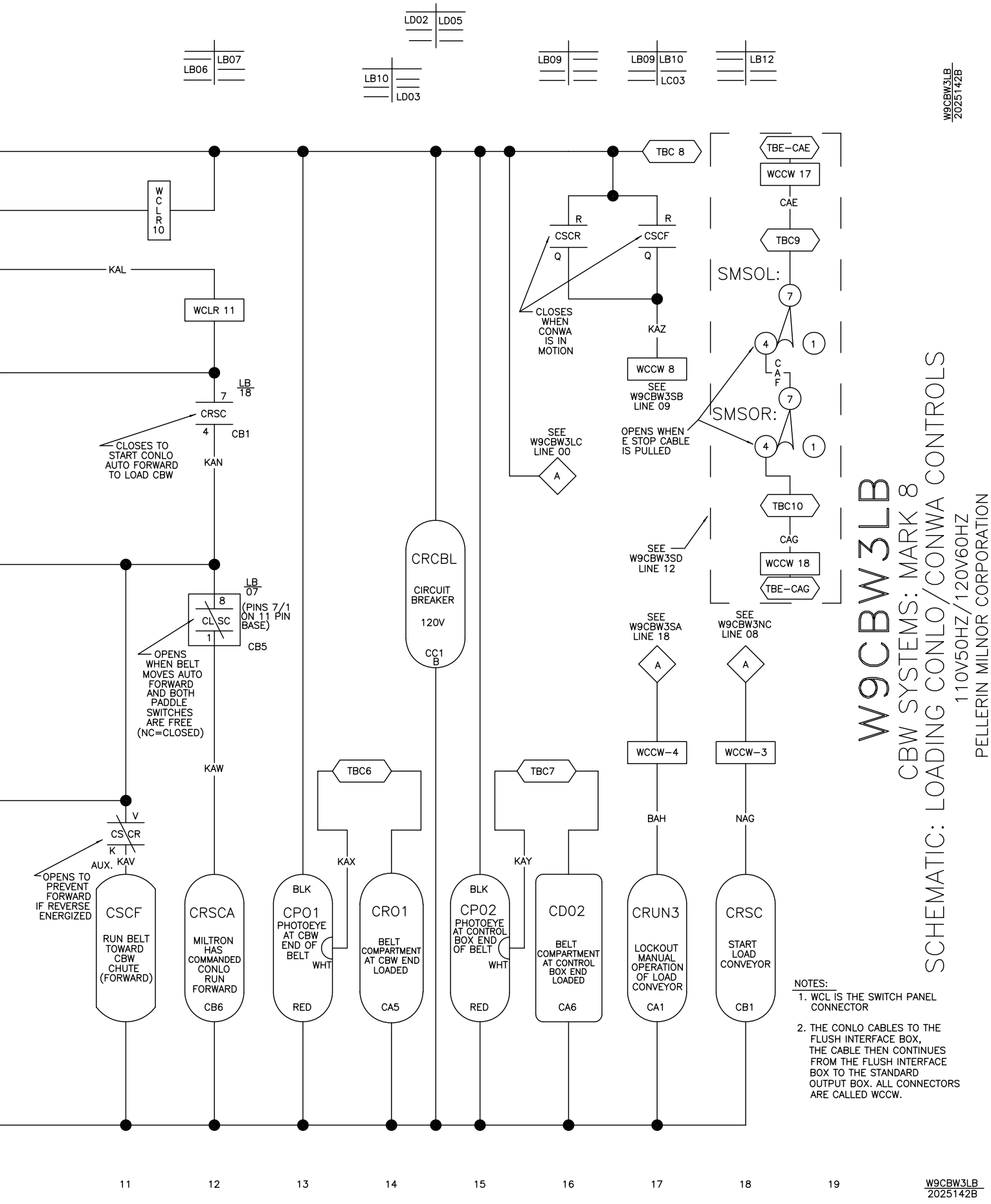
W9CBW3LB
2025142B
LD02 LD05
LB06 LB07
LB10 LD03
LB09
LB09 LB10 LC03
LB12
TBC 8
TBE–CAE
WCCW 17
CAE
TBC9
SMSOL:
SMSOR:
CAF
TBC10
CAG
WCCW 18
TBE–CAG
WCLR 10
KAL
WCLR 11
LB 18
CRSC
CB1
CLOSES TO START CONLO AUTO FORWARD TO LOAD CBW
KAN
CLOSES WHEN CONWA IS IN MOTION
CSCR
CSCF
KAZ
WCCW 8
SEE W9CBW3SB LINE 09
OPENS WHEN E STOP CABLE IS PULLED
SEE W9CBW3LC LINE 00
SEE W9CBW3SD LINE 12
LB 07
(PINS 7/1 ON 11 PIN BASE)
CL SC
CB5
OPENS WHEN BELT MOVES AUTO FORWARD AND BOTH PADDLE SWITCHES ARE FREE (NC=CLOSED)
CRCBL
CIRCUIT BREAKER
120V
CC1 B
SEE W9CBW3SA LINE 18
SEE W9CBW3NC LINE 08
WCCW–4
WCCW–3
BAH
NAG
KAW
TBC6
TBC7
KAX
KAY
CS CR
AUX. KAV
OPENS TO PREVENT FORWARD IF REVERSE ENERGIZED
CSCF
RUN BELT TOWARD CBW CHUTE (FORWARD)
CRSCA
MILTRON HAS COMMANDED CONLO RUN FORWARD
CB6
BLK
CP01
PHOTOEYE AT CBW END OF BELT
WHT
RED
CRO1
BELT COMPARTMENT AT CBW END LOADED
CA5
CP02
PHOTOEYE AT CONTROL BOX END OF BELT
CD02
BELT COMPARTMENT AT CONTROL BOX END LOADED
CA6
CRUN3
LOCKOUT MANUAL OPERATION OF LOAD CONVEYOR
CA1
CRSC
START LOAD CONVEYOR
CB1
11 12 13 14 15 16 17 18 19
W9CBW3LB
CBW SYSTEMS: MARK 8
SCHEMATIC: LOADING CONLO/CONWA CONTROLS
110V50HZ/120V60HZ
PELLERIN MILNOR CORPORATION
NOTES:
1. WCL IS THE SWITCH PANEL CONNECTOR
2. THE CONLO CABLES TO THE FLUSH INTERFACE BOX, THE CABLE THEN CONTINUES FROM THE FLUSH INTERFACE BOX TO THE STANDARD OUTPUT BOX. ALL CONNECTORS ARE CALLED WCCW.
W9CBW3LB
2025142B

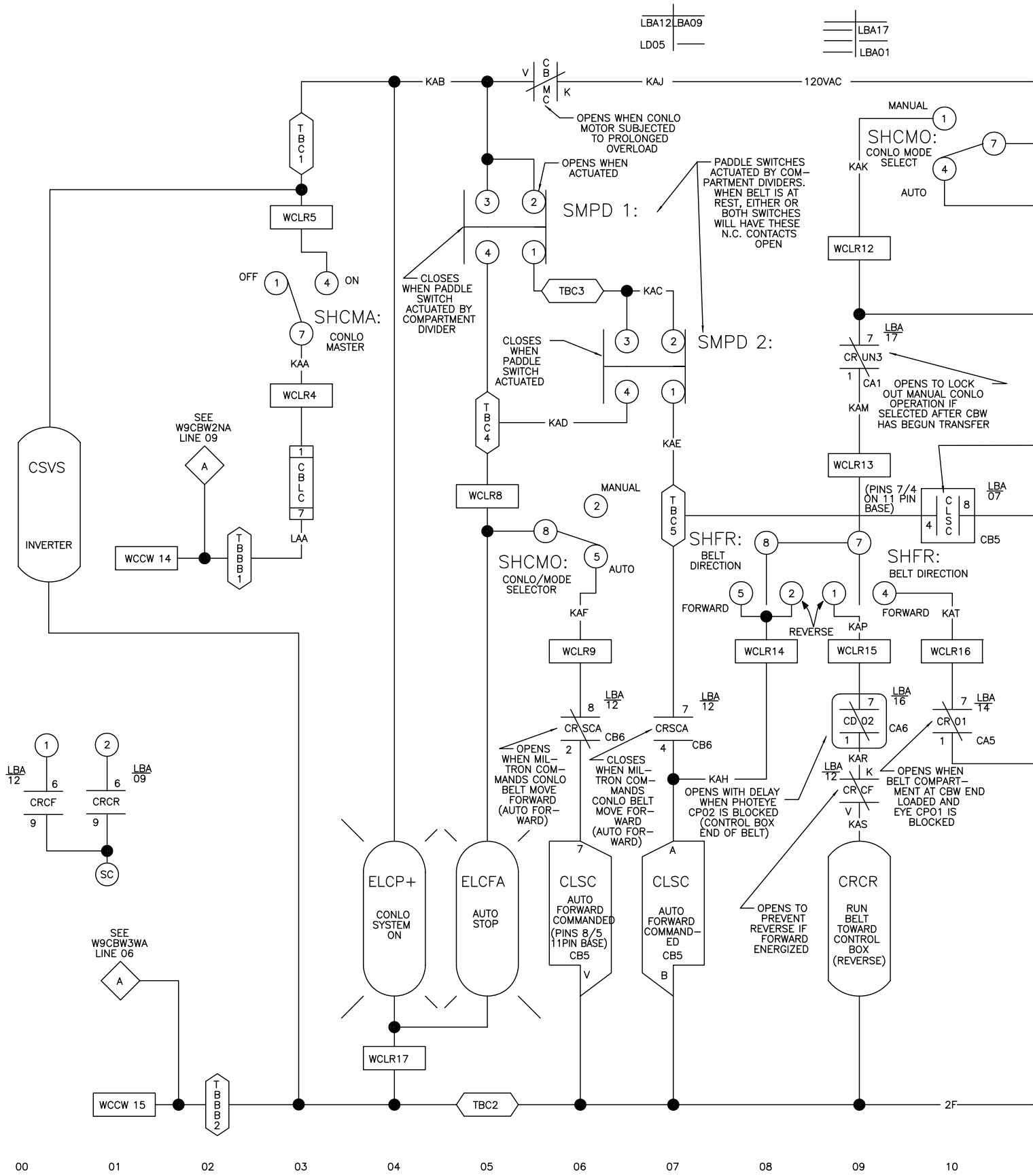
LBA12 LBA09
LD05
LBA17
LBA01
KAB
KAJ
120VAC
CBMC
OPENS WHEN CONLO MOTOR SUBJECTED TO PROLONGED OVERLOAD
TBC1
WCLR5
OPENS WHEN ACTUATED
SMPD 1:
PADDLE SWITCHES ACTUATED BY COMPARTMENT DIVIDERS. WHEN BELT IS AT REST, EITHER OR BOTH SWITCHES WILL HAVE THESE N.C. CONTACTS OPEN
CLOSES WHEN PADDLE SWITCH ACTUATED BY COMPARTMENT DIVIDER
TBC3
KAC
SMPD 2:
CLOSES WHEN PADDLE SWITCH ACTUATED
OFF
ON
SHCMA:
CONLO MASTER
KAA
WCLR4
SEE W9CBW2NA LINE 09
CBLC
LAA
CSVS
INVERTER
WCCW 14
TBBB1
TBC4
KAD
KAE
WCLR8
MANUAL
SHCMO:
CONLO/MODE SELECTOR
AUTO
KAF
WCLR9
TBC5
SHFR:
BELT DIRECTION
FORWARD
REVERSE
KAP
WCLR14
WCLR15
WCLR16
KAT
MANUAL
SHCMO:
CONLO MODE SELECT
AUTO
KAK
WCLR12
LBA 17
CR UN3
CA1
OPENS TO LOCK OUT MANUAL CONLO OPERATION IF SELECTED AFTER CBW HAS BEGUN TRANSFER
KAM
WCLR13
(PINS 7/4 ON 11 PIN BASE)
CLSC
CB5
LBA 07
SHFR:
BELT DIRECTION
LBA 12
CR SCA
CB6
OPENS WHEN MILTRON COMMANDS CONLO BELT MOVE FORWARD (AUTO FORWARD)
CRSCA
CLOSES WHEN MILTRON COMMANDS CONLO BELT MOVE FORWARD (AUTO FORWARD)
KAH
OPENS WITH DELAY WHEN PHOTEYE CP02 IS BLOCKED (CONTROL BOX END OF BELT)
LBA 16
CD 02
CA6
KAR
LBA 12
CR CF
KAS
OPENS WHEN BELT COMPARTMENT AT CBW END LOADED AND EYE CP01 IS BLOCKED
LBA 14
CR 01
CA5
LBA 12
CRCF
LBA 09
CRCR
SC
SEE W9CBW3WA LINE 06
ELCP+
CONLO SYSTEM ON
ELCFA
AUTO STOP
CLSC
AUTO FORWARD COMMANDED (PINS 8/5 11PIN BASE)
CB5
CLSC
AUTO FORWARD COMMANDED
CB5
OPENS TO PREVENT REVERSE IF FORWARD ENERGIZED
CRCR
RUN BELT TOWARD CONTROL BOX (REVERSE)
WCLR17
WCCW 15
TBBB2
TBC2
2F
00
01
02
03
04
05
06
07
08
09
10
W9CBW3LBA
2025142B

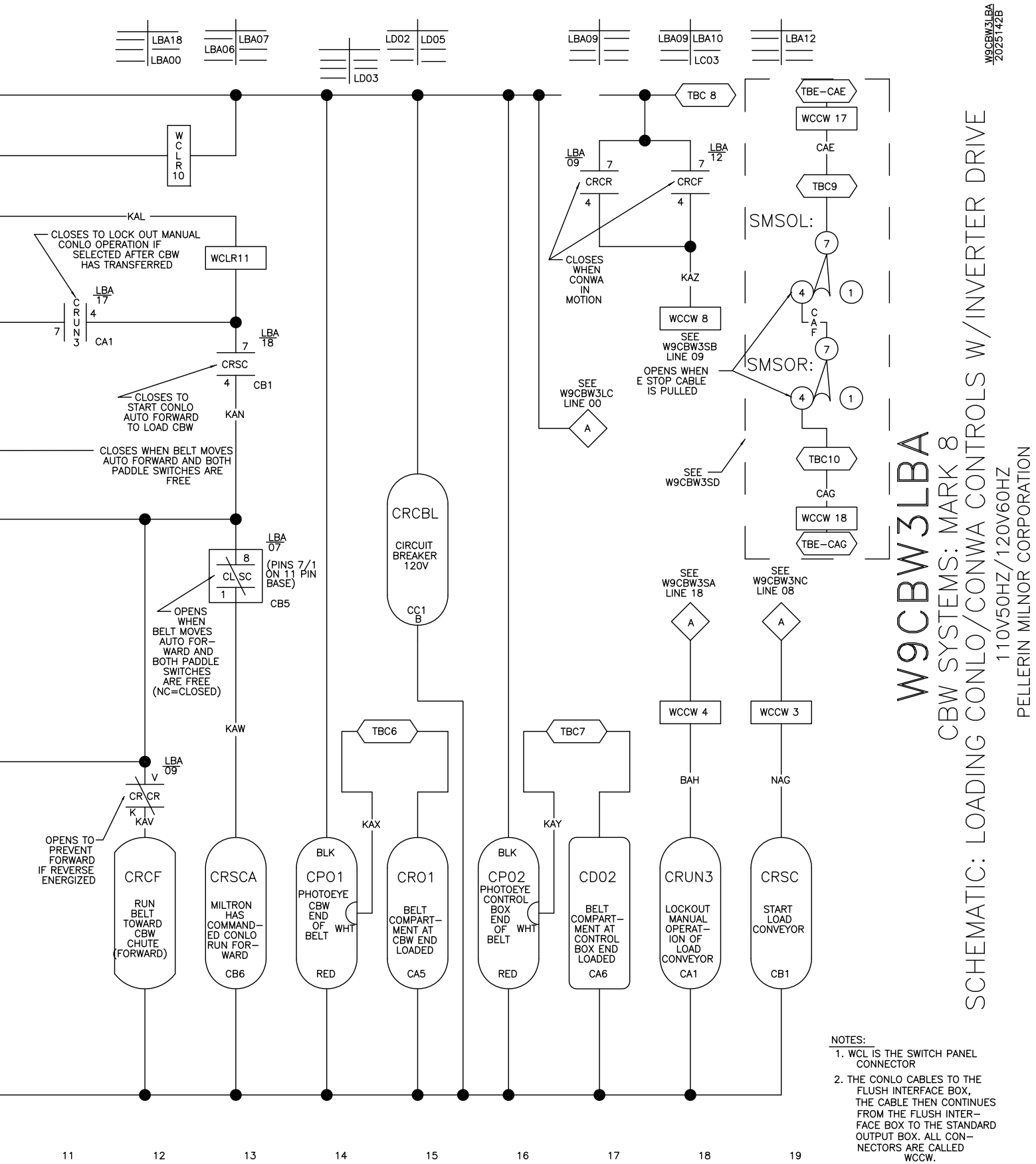

NOTES:

1. WCL IS THE SWITCH PANEL CONNECTOR
2. THE CONLO CABLES TO THE FLUSH INTERFACE BOX, THE CABLE THEN CONTINUES FROM THE FLUSH INTERFACE BOX TO THE STANDARD OUTPUT BOX. ALL CONNECTORS ARE CALLED WCCW.

W9CBW3LBA
2025142B

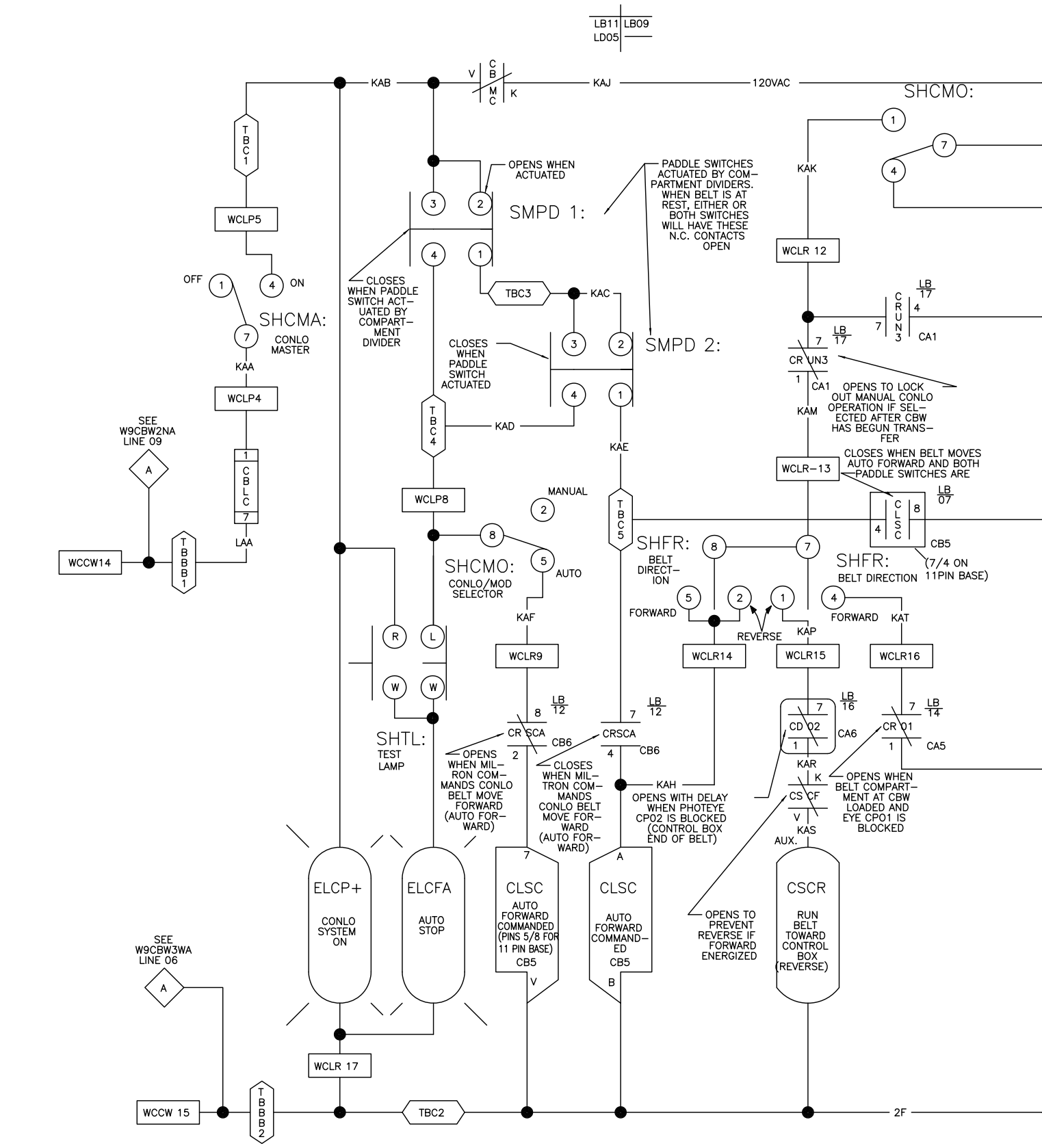

W9CBW3LCB
2025142B

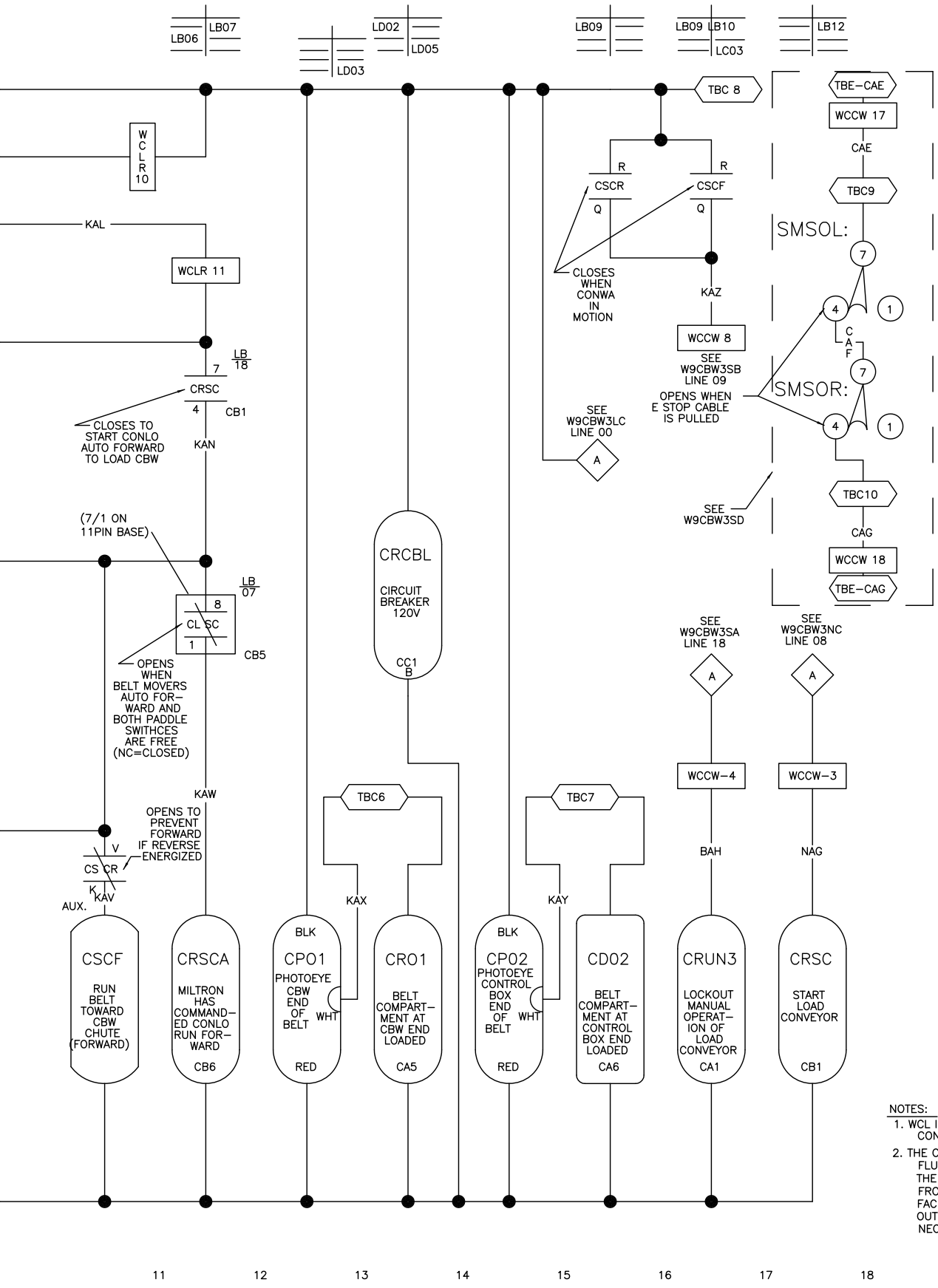

NOTES:

1. WCL IS THE SWITCH PANEL CONNECTOR
2. THE CONLO CABLES TO THE FLUSH INTERFACE BOX, THE CABLE THEN CONTINUES FROM THE FLUSH INTER–FACE BOX TO THE STANDARD OUTPUT BOX. ALL CON–NECTORS ARE CALLED WCCW.

W9CBW3LBB

SCHEMATIC: LOADING CONLO/CONWA CONTROLS W/ LAMP TEST

PELLERIN MILNOR CORPORATION

W9CBW3LCB
2025142B

W9CBW3LCB
2025142B

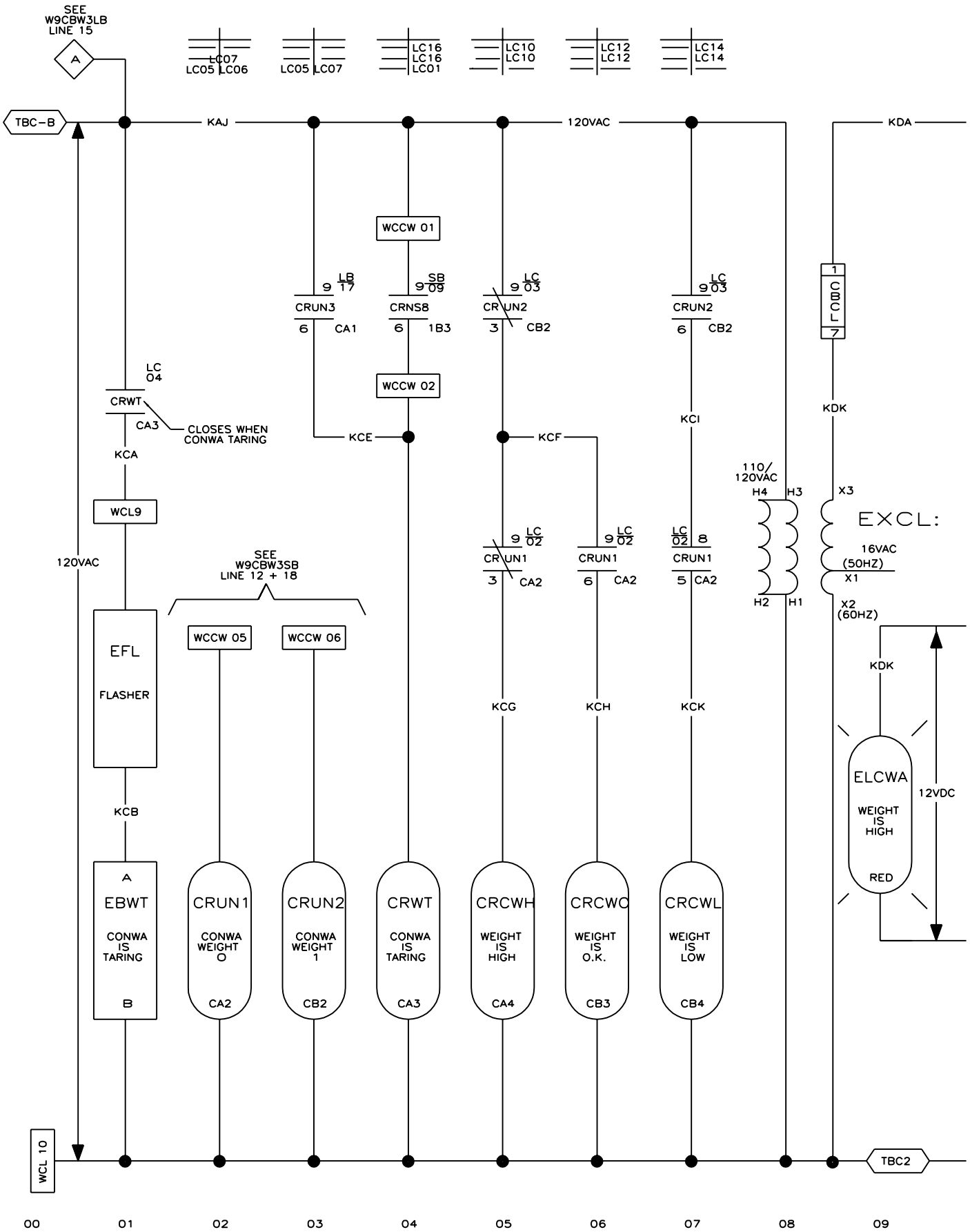

W9CBW3LC
2002453B

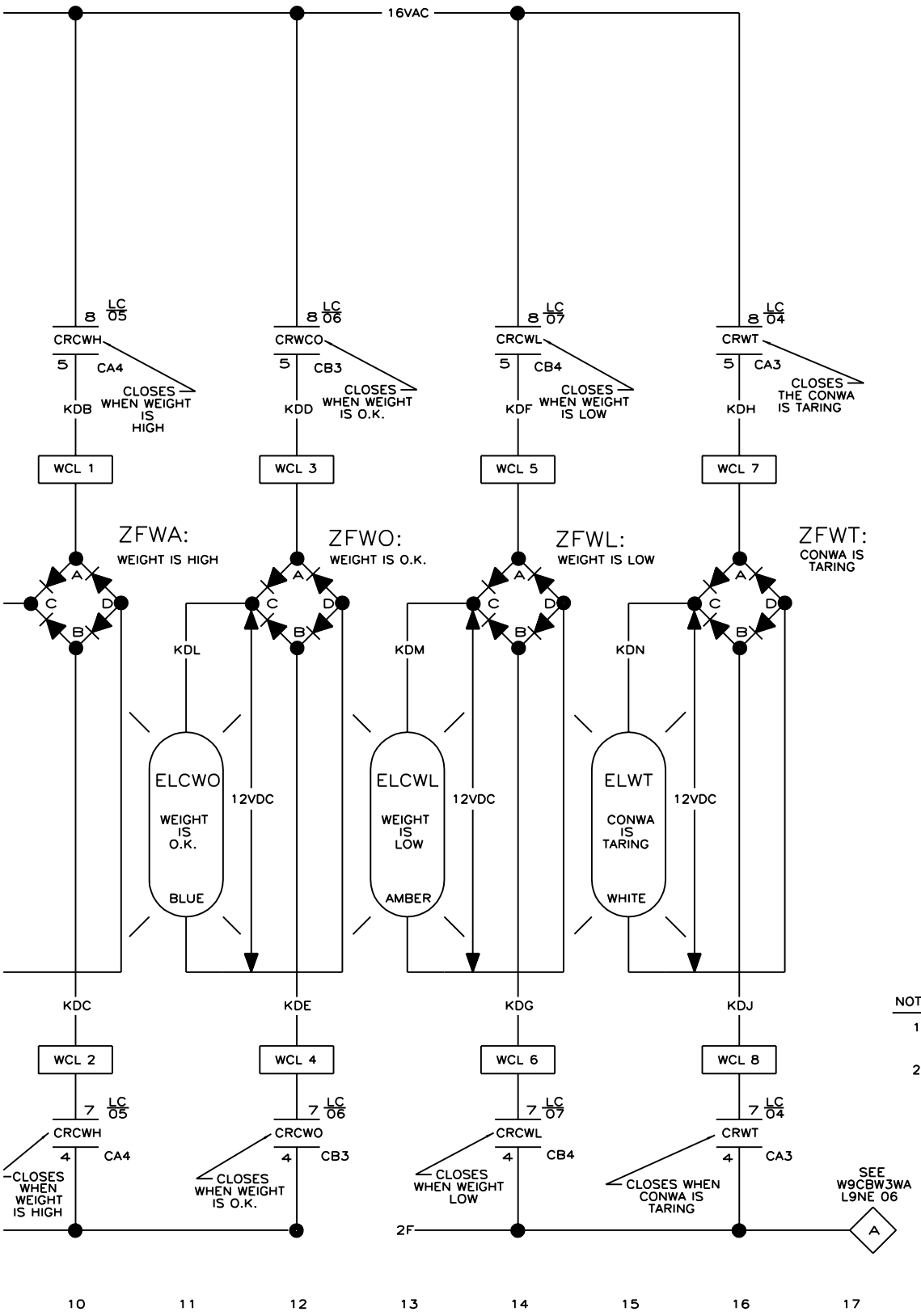

NOTES:

1. TBC, TBE ARE LOCATED IN CONWA CONTROL BOX.
2. WCL IS LOCATED IN THE CONLO BOX AND THE LIGHT BOX.

W9CBW3LC

SCHEMATIC: LOADING–CONWA LIGHTS

PELLERIN MILNOR CORPORATION

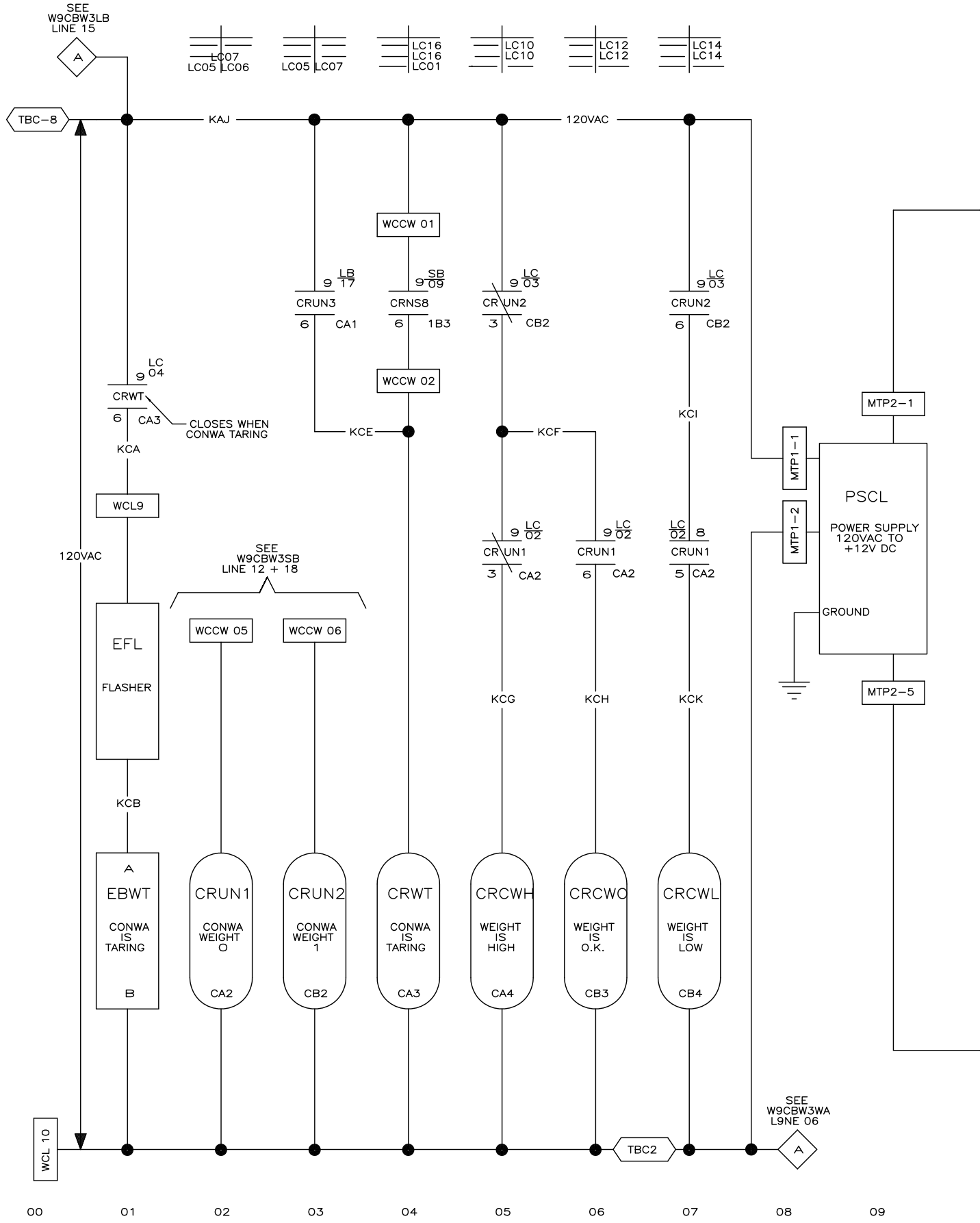

W9CBW3LCA
2014385B

W9CBW3LCA

SCHEMATIC: LOADING—CONWA LED LIGHTS FOR CONWA MANUFACTURED AFTER JAN. 1, 2007

PELLERIN MILNOR CORPORATION

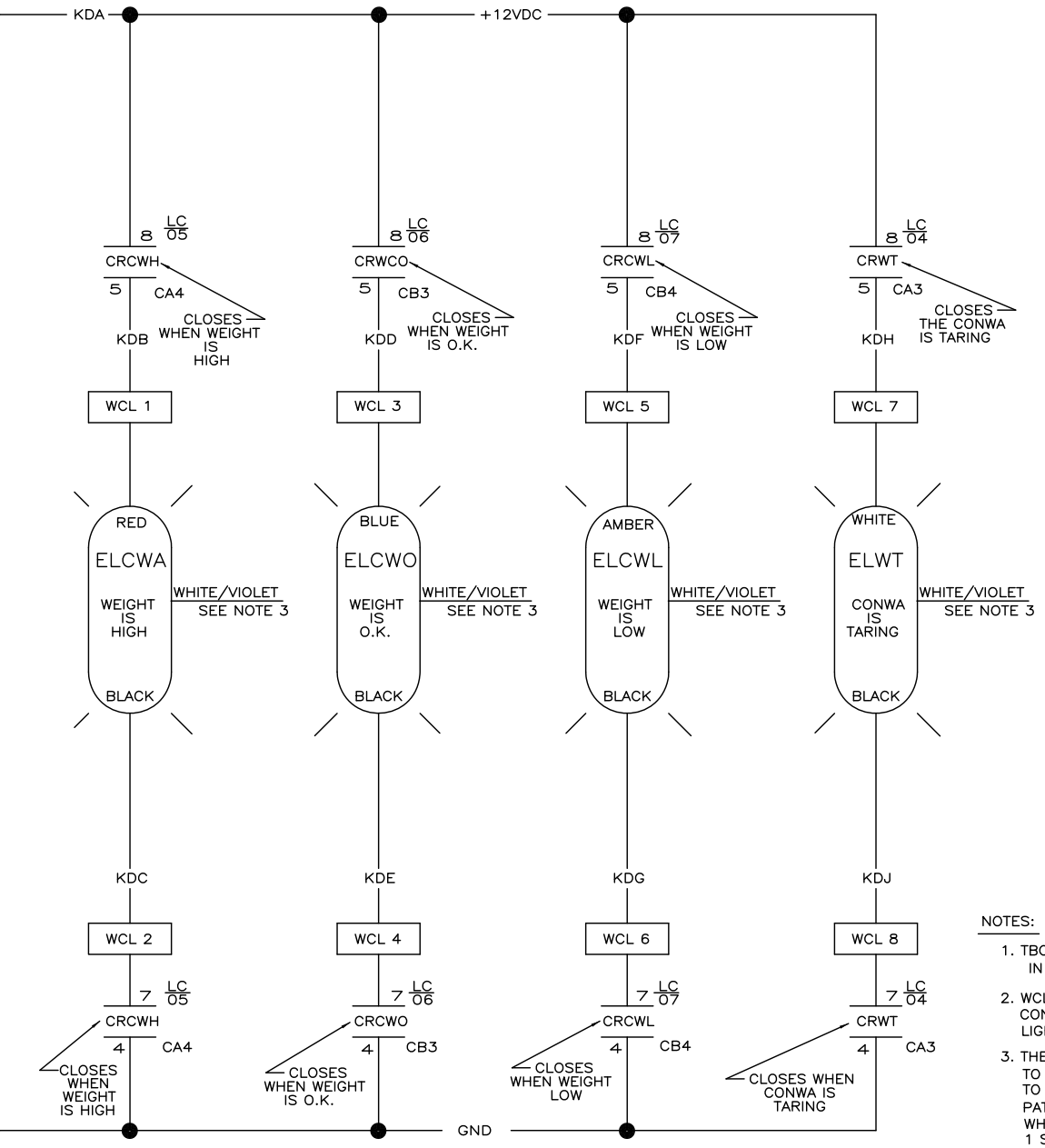

NOTES:

1. TBC, TBE ARE LOCATED IN CONWA CONTROL BOX.
2. WCL IS LOCATED IN THE CONLO BOX AND THE LIGHT BOX.
3. THE LED CONTROLLER MUST BE SET TO HAVE THE LED CONTINUOUSLY ON. TO CYCLE THROUGH ALL THE LED PATTERNS. APPLY +12V TO THE WHITE/VIOLET WIRE FOR LESS THAN 1 SECOND AND RELEASE TO CYCLE FORWARD. APPLY AND RELEASE +12V FOR MORE THAN 1 SECOND TO CYCLE BACKWARDS.

   WHEN LIGHT IS CONTINUIOUSLY ON ALLOW IT TO RUN FOR MORE THAN 5 SECONDS TO SET PATTERN.

   TO RESET PATTERN TURN POWER OFF AND APPLY +12V TO THE WHITE/VIOLET WIRE WHILE TURNING POWER BACK ON TO LIGHT.

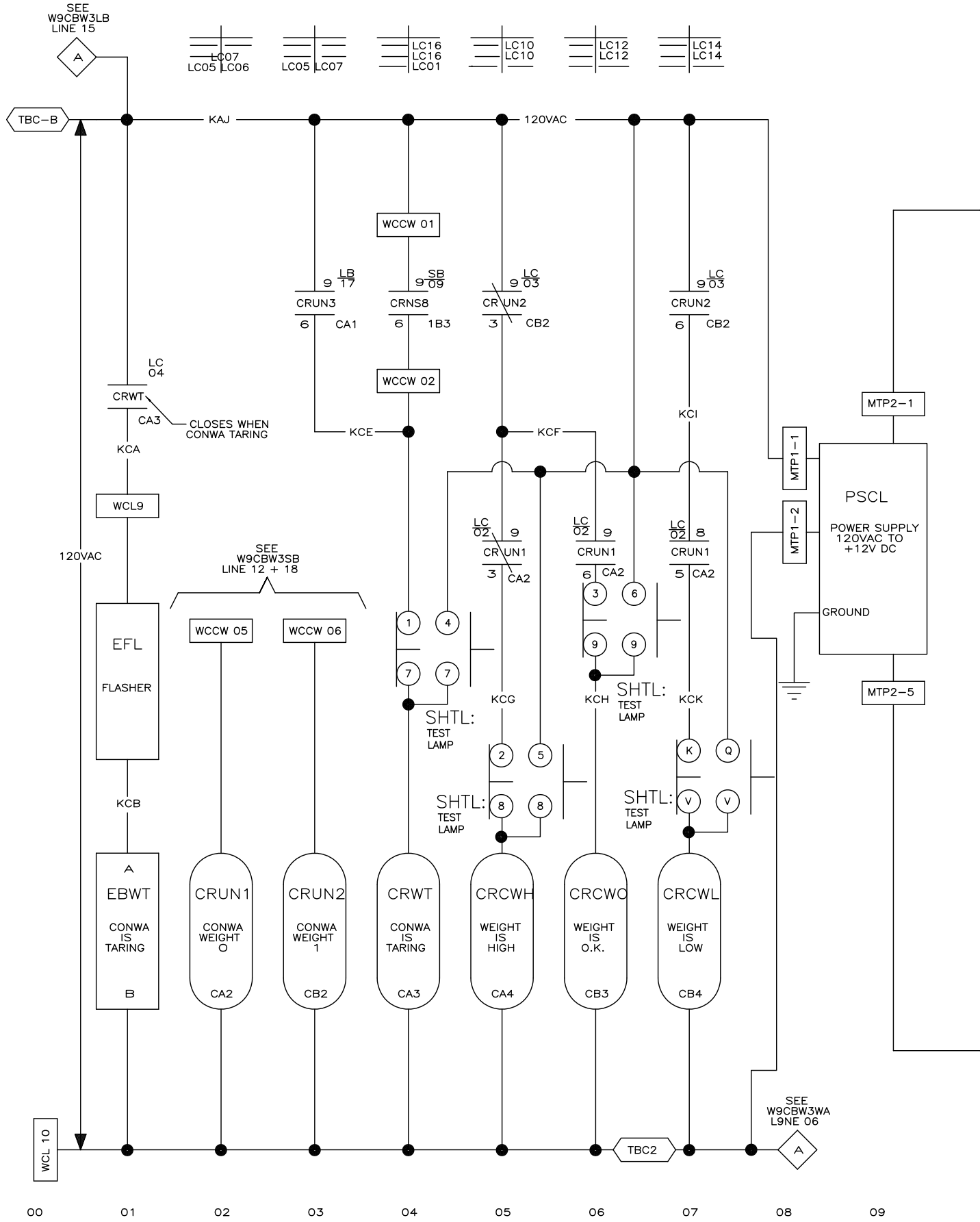

W9CBW3LCB
2019245B

W9CBW3LCB

SCHEMATIC: LOADING—CONWA LED LIGHTS W/LAMP TEST

PELLERIN MILNOR CORPORATION

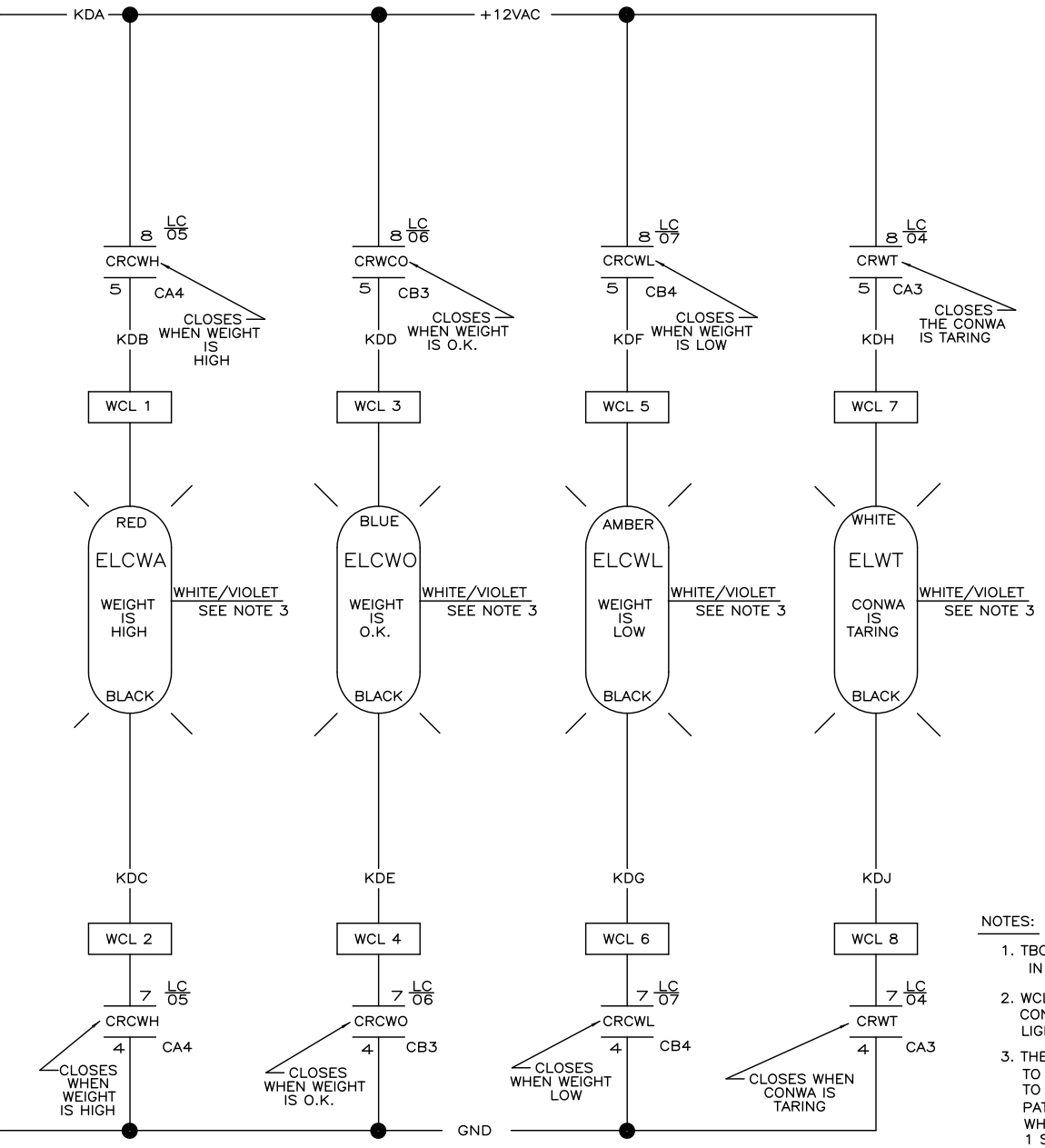

NOTES:

1. TBC, TBE ARE LOCATED IN CONWA CONTROL BOX.
2. WCL IS LOCATED IN THE CONLO BOX AND THE LIGHT BOX.
3. THE LED CONTROLLER MUST BE SET TO HAVE THE LED CONTINUOUSLY ON. TO CYCLE THROUGH ALL THE LED PATTERNS. APPLY +12V TO THE WHITE/VIOLET WIRE FOR LESS THAN 1 SECOND AND RELEASE TO CYCLE FORWARD. APPLY AND RELEASE +12V FOR MORE THAN 1 SECOND TO CYCLE BACKWARDS.

   WHEN LIGHT IS CONTINUIOUSLY ON ALLOW IT TO RUN FOR MORE THAN 5 SECONDS TO SET PATTERN.

   TO RESET PATTERN TURN POWER OFF AND APPLY +12V TO THE WHITE/VIOLET WIRE WHILE TURNING POWER BACK ON TO LIGHT.

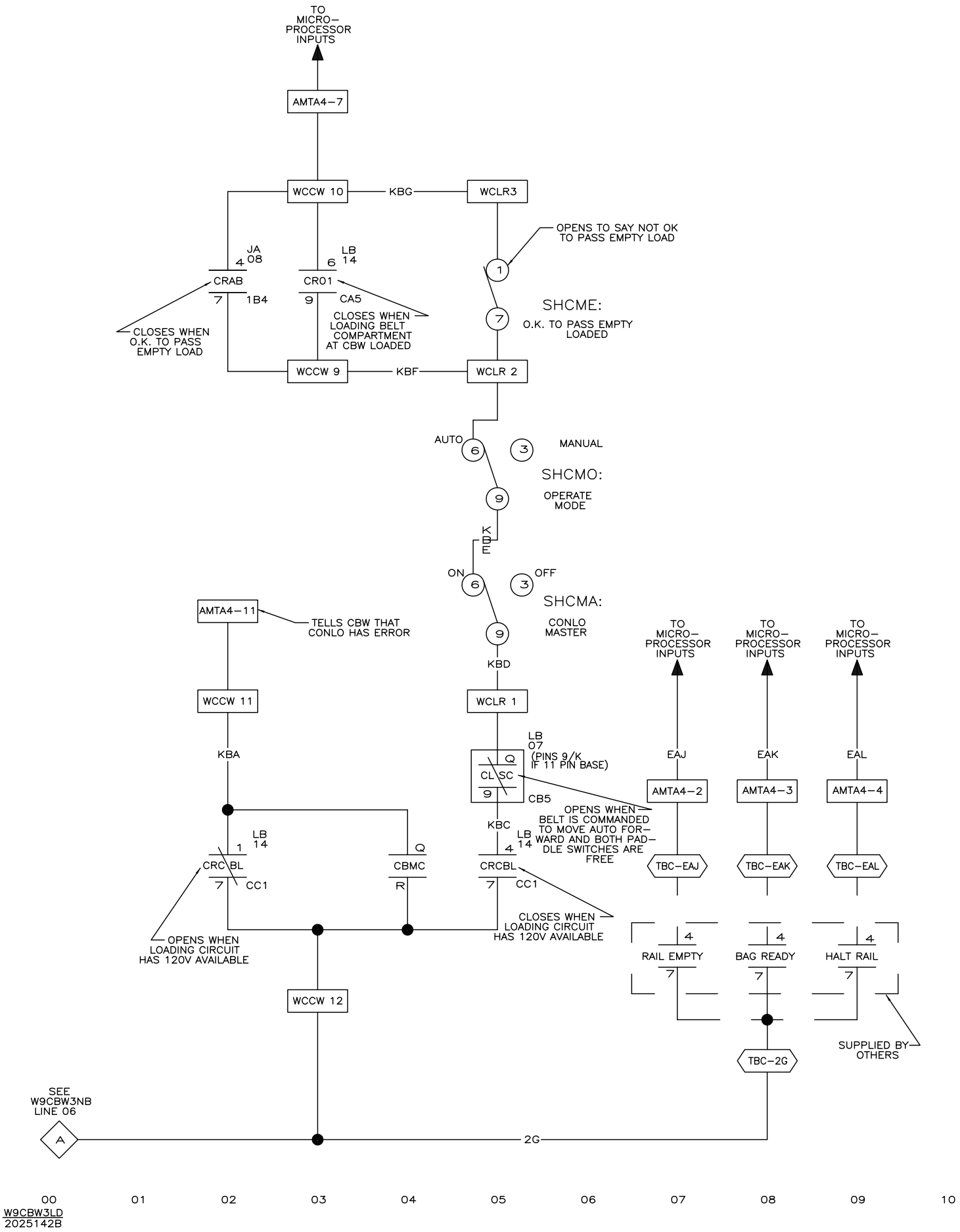
TO MICRO-PROCESSOR INPUTS
AMTA4-7
WCCW 10
KBG
WCLR3
OPENS TO SAY NOT OK TO PASS EMPTY LOAD
JA 08
LB 14
CRAB
CR01
1B4
CA5
CLOSES WHEN O.K. TO PASS EMPTY LOAD
CLOSES WHEN LOADING BELT COMPARTMENT AT CBW LOADED
SHCME:
O.K. TO PASS EMPTY LOADED
WCCW 9
KBF
WCLR 2
AUTO
MANUAL
SHCMO:
OPERATE MODE
KBE
ON
OFF
SHCMA:
CONLO MASTER
AMTA4-11
TELLS CBW THAT CONLO HAS ERROR
KBD
WCCW 11
WCLR 1
KBA
LB 07
(PINS 9/K IF 11 PIN BASE)
CL SC
CB5
OPENS WHEN BELT IS COMMANDED TO MOVE AUTO FORWARD AND BOTH PADDLE SWITCHES ARE FREE
KBC
LB 14
CRCBL
CC1
CBMC
OPENS WHEN LOADING CIRCUIT HAS 120V AVAILABLE
CLOSES WHEN LOADING CIRCUIT HAS 120V AVAILABLE
TO MICRO-PROCESSOR INPUTS
EAJ
EAK
EAL
AMTA4-2
AMTA4-3
AMTA4-4
TBC-EAJ
TBC-EAK
TBC-EAL
RAIL EMPTY
BAG READY
HALT RAIL
SUPPLIED BY OTHERS
WCCW 12
TBC-2G
SEE W9CBW3NB LINE 06
A
2G
00
01
02
03
04
05
06
07
08
09
10
W9CBW3LD
2025142B

11 12 13 14 15 16 17 18 19

W9CBW3LD

G3 CBW SYSTEMS: MARK 9
SCHEMATIC: CONLO/CONWA/BAG INPUTS
REFER TO W9CBW3LB

PELLERIN MILNOR CORPORATION

W9CBW3LD
2025142B

W9CBW3LD
2025142B

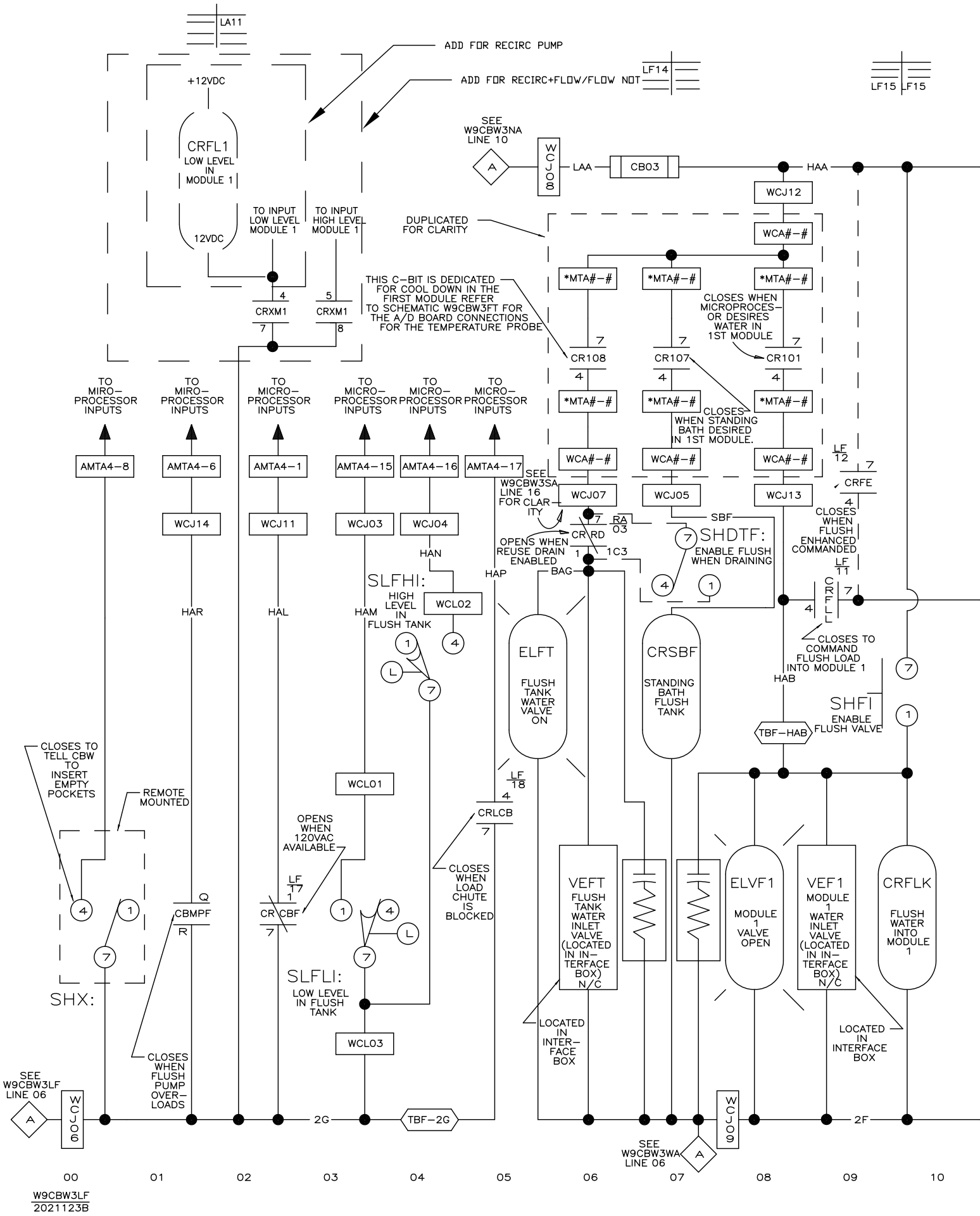
LA11
ADD FOR RECIRC PUMP
ADD FOR RECIRC+FLOW/FLOW NOT
LF14
LF15 LF15
+12VDC
CRFL1
LOW LEVEL IN MODULE 1
12VDC
TO INPUT LOW LEVEL MODULE 1
TO INPUT HIGH LEVEL MODULE 1
CRXM1
SEE W9CBW3NA LINE 10
WCJ08
LAA
CB03
HAA
WCJ12
DUPLICATED FOR CLARITY
WCA#-#
*MTA#-#
THIS C-BIT IS DEDICATED FOR COOL DOWN IN THE FIRST MODULE REFER TO SCHEMATIC W9CBW3FT FOR THE A/D BOARD CONNECTIONS FOR THE TEMPERATURE PROBE
CLOSES WHEN MICROPROCES-OR DESIRES WATER IN 1ST MODULE
CR108
CR107
CR101
CLOSES WHEN STANDING BATH DESIRED IN 1ST MODULE.
TO MIRO-PROCESSOR INPUTS
TO MICRO-PROCESSOR INPUTS
AMTA4-8
AMTA4-6
AMTA4-1
AMTA4-15
AMTA4-16
AMTA4-17
WCJ14
WCJ11
WCJ03
WCJ04
WCJ07
WCJ05
WCJ13
SEE W9CBW3SA LINE 16 FOR CLARITY
OPENS WHEN REUSE DRAIN ENABLED
CR RD
RA 03
1C3
SBF
SHDTF:
ENABLE FLUSH WHEN DRAINING
CRFE
CLOSES WHEN FLUSH ENHANCED COMMANDED
CRFLL
CLOSES TO COMMAND FLUSH LOAD INTO MODULE 1
HAB
SHFI
ENABLE FLUSH VALVE
TBF-HAB
HAN
HAP
BAG
SLFHI:
HIGH LEVEL IN FLUSH TANK
WCL02
HAR
HAL
HAM
ELFT
FLUSH TANK WATER VALVE ON
CRSBF
STANDING BATH FLUSH TANK
CLOSES TO TELL CBW TO INSERT EMPTY POCKETS
REMOTE MOUNTED
WCL01
CRLCB
OPENS WHEN 120VAC AVAILABLE
CLOSES WHEN LOAD CHUTE IS BLOCKED
CBMPF
CR CBF
VEFT
FLUSH TANK WATER INLET VALVE (LOCATED IN IN-TERFACE BOX) N/C
ELVF1
MODULE 1 VALVE OPEN
VEF1
MODULE 1 WATER INLET VALVE (LOCATED IN IN-TERFACE BOX) N/C
CRFLK
FLUSH WATER INTO MODULE 1
SHX:
SLFLI:
LOW LEVEL IN FLUSH TANK
WCL03
LOCATED IN INTER-FACE BOX
LOCATED IN INTERFACE BOX
CLOSES WHEN FLUSH PUMP OVER-LOADS
SEE W9CBW3LF LINE 06
WCJ06
2G
TBF-2G
SEE W9CBW3WA LINE 06
WCJ09
2F
00
01
02
03
04
05
06
07
08
09
10
W9CBW3LF
2021123B

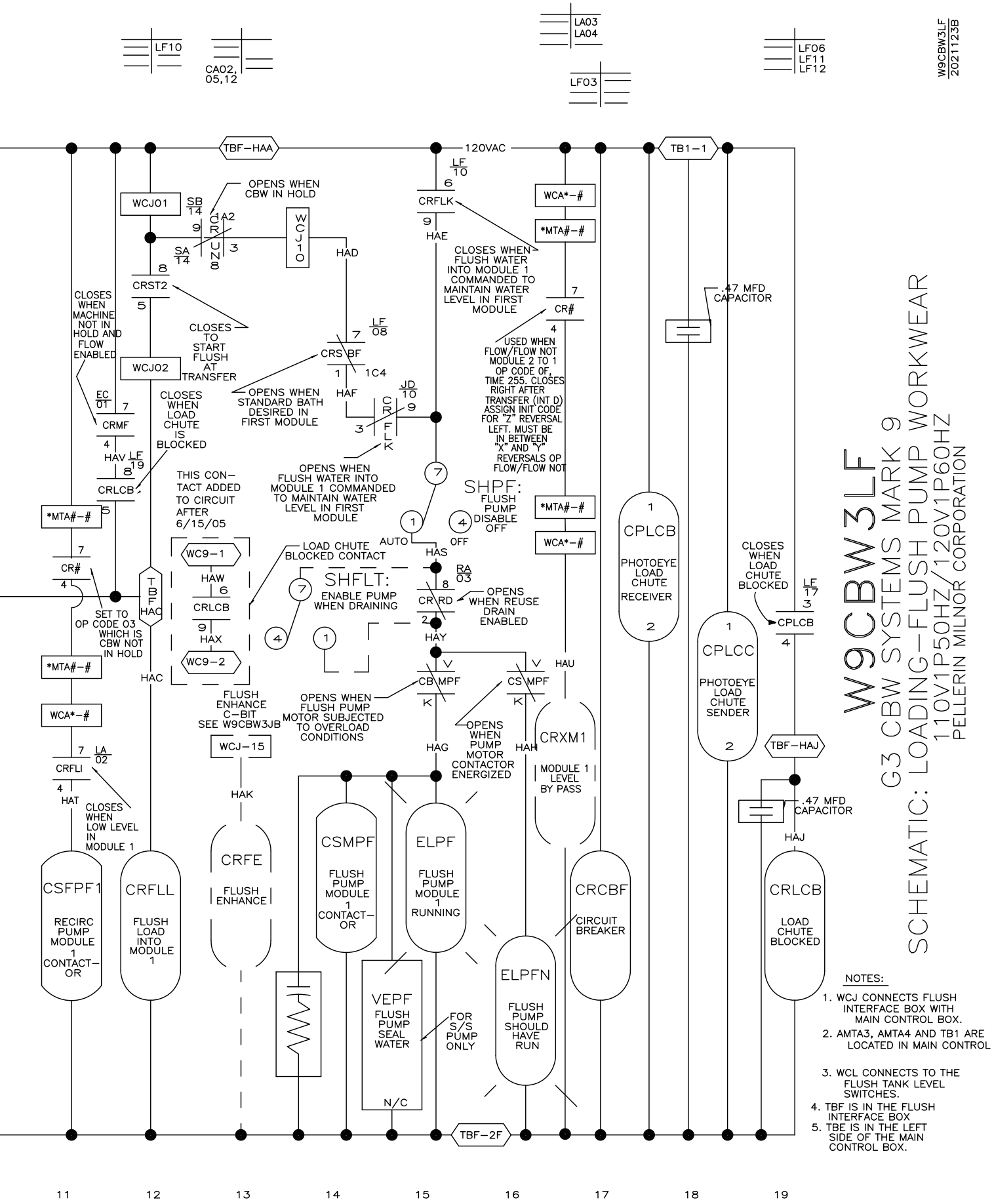

W9CBW3LF

G3 CBW SYSTEMS MARK 9

SCHEMATIC: LOADING–FLUSH PUMP WORKWEAR

110V1P50HZ/120V1P60HZ

PELLERIN MILNOR CORPORATION

NOTES:

1. WCJ CONNECTS FLUSH INTERFACE BOX WITH MAIN CONTROL BOX.
2. AMTA3, AMTA4 AND TB1 ARE LOCATED IN MAIN CONTROL
3. WCL CONNECTS TO THE FLUSH TANK LEVEL SWITCHES.
4. TBF IS IN THE FLUSH INTERFACE BOX
5. TBE IS IN THE LEFT SIDE OF THE MAIN CONTROL BOX.

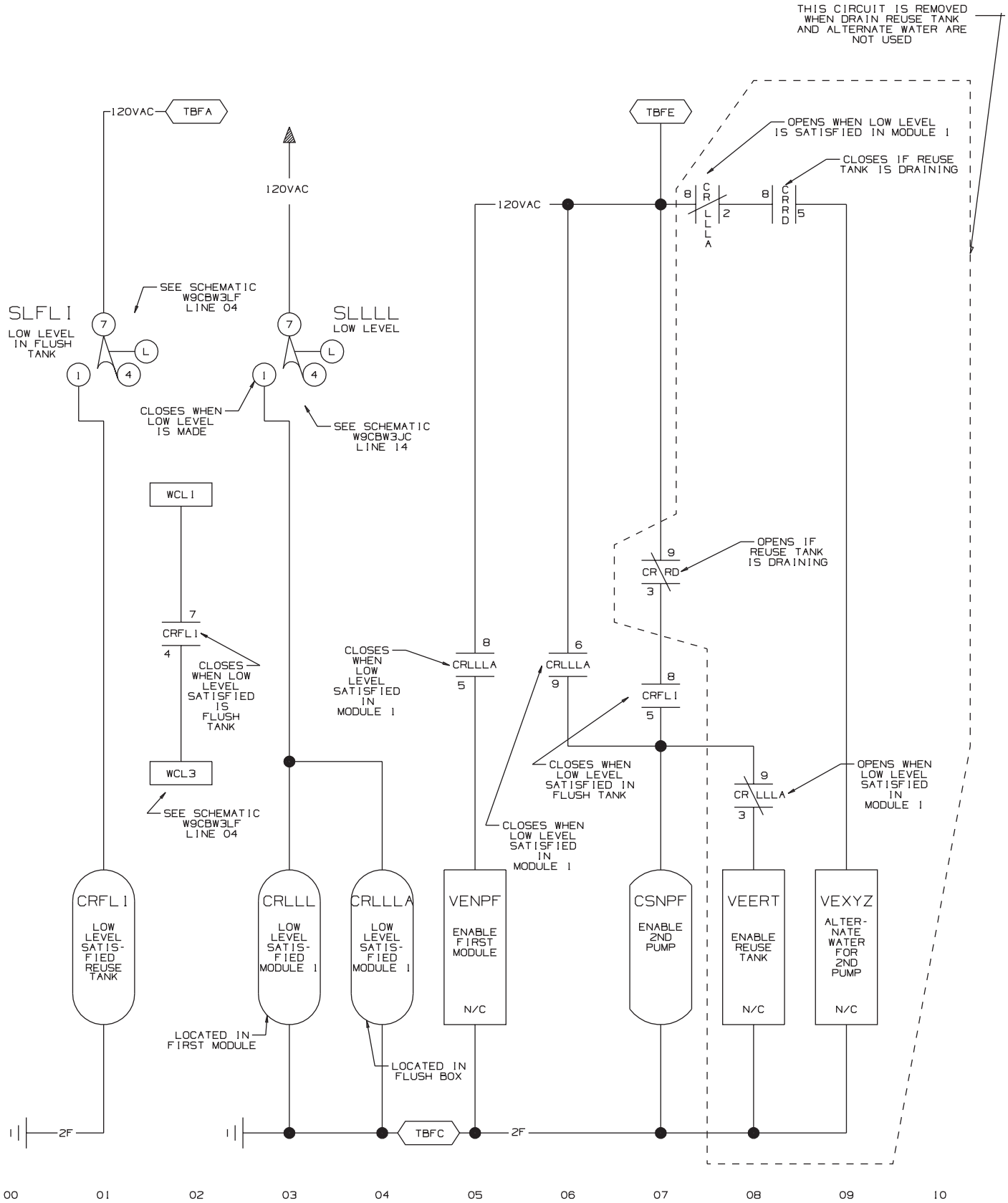

W9CBW3LG
99133B

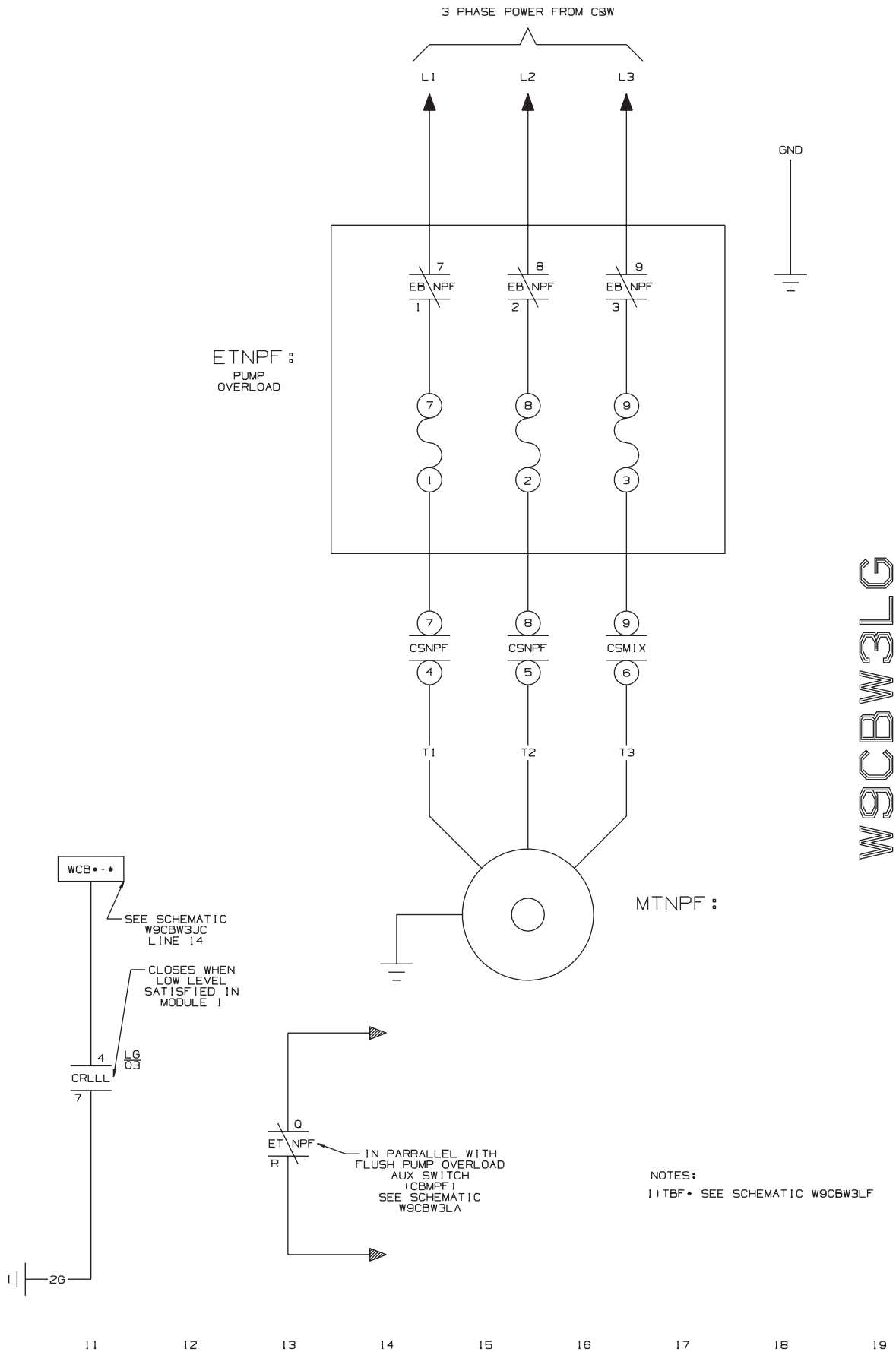

W9CBW3LG

G3 CBW SYSTEMS MARK 9 FOR 76039 CBW ONLY

SCHEMATIC: FLUSH VALVES FOR WELDED TUNNELS

PELLERIN MILNOR CORPORATION

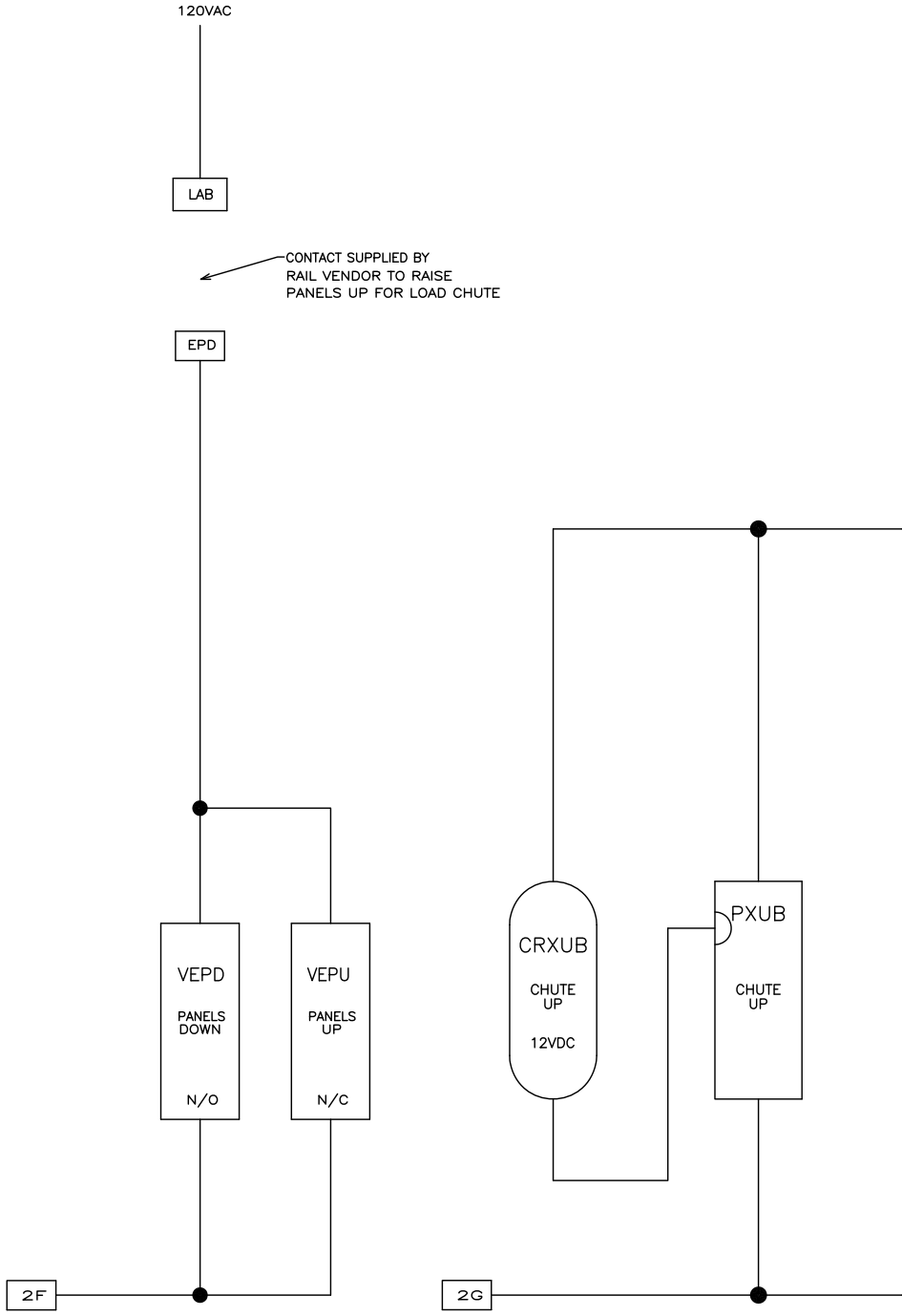

00 01 02 03 04 05 06 07 08 08

LITHO IN U.S.A.

W9CBW3LH
2017413B

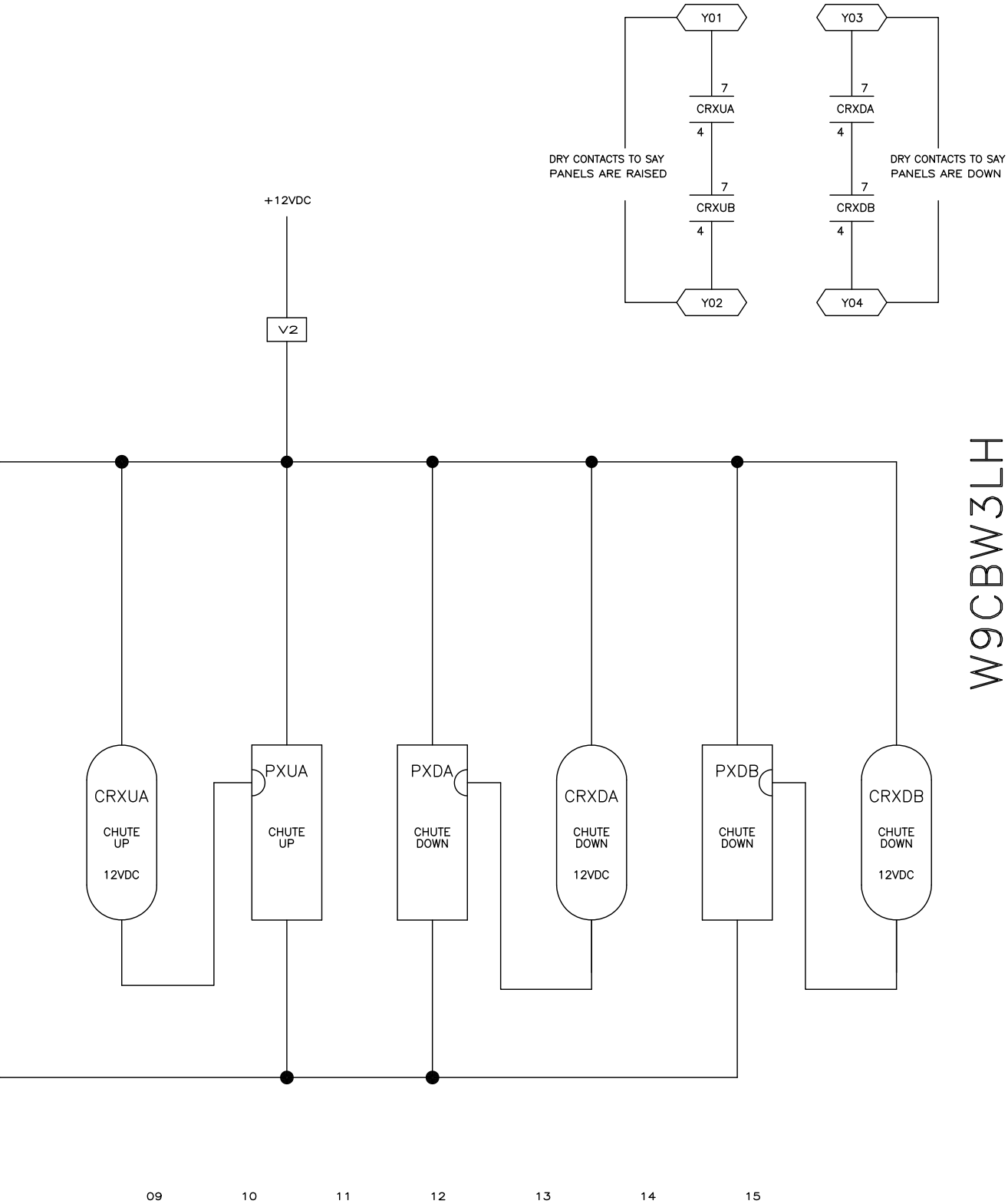

W9CBW3LH

SCHEMATIC: LOAD CHUTE FLAPS

110V1P50HZ/120V1P60HZ

PELLERIN MILNOR CORPORATION

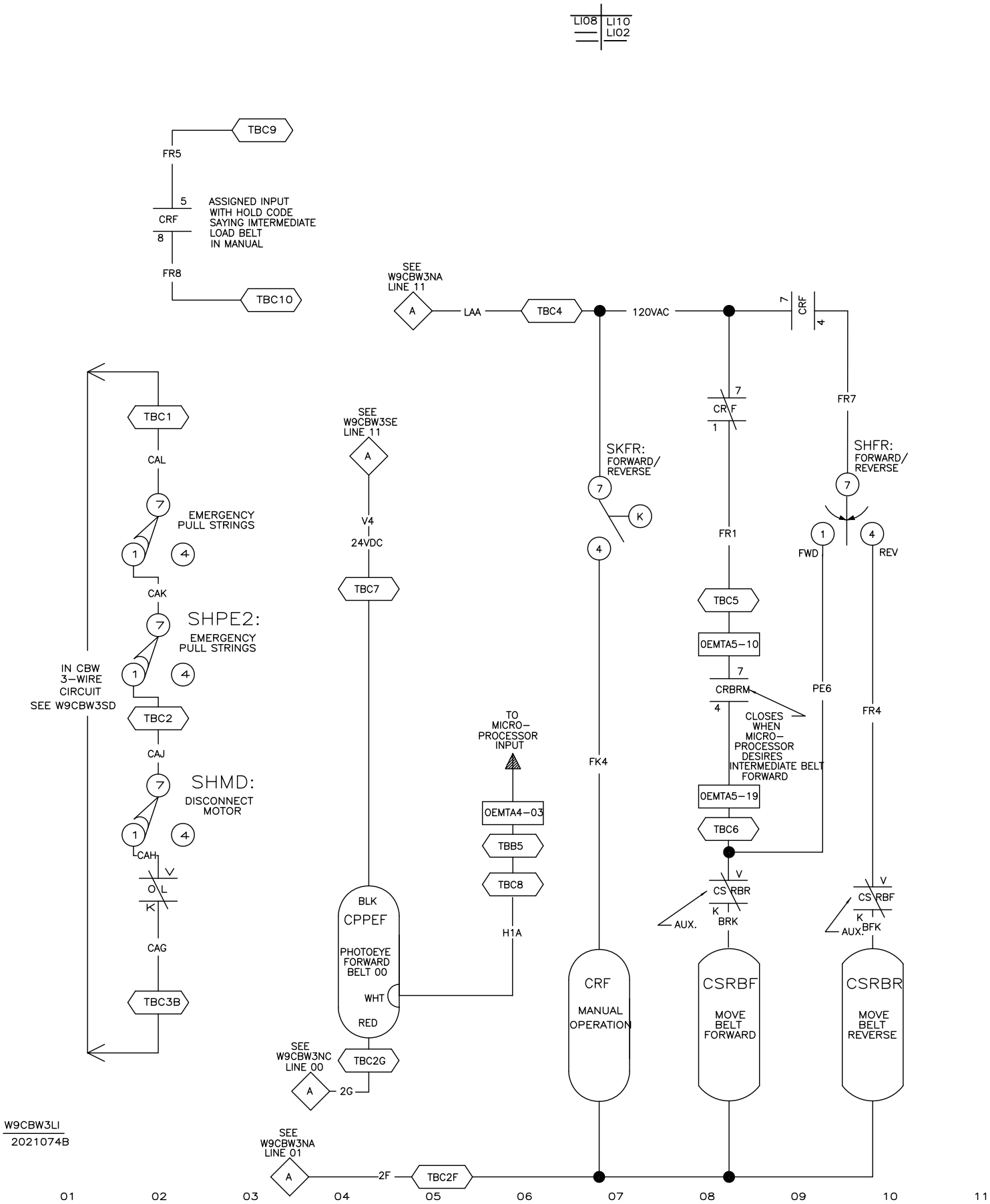
LI08
LI10
LI02
TBC9
FR5
5
CRF
8
ASSIGNED INPUT
WITH HOLD CODE
SAYING IMTERMEDIATE
LOAD BELT
IN MANUAL
FR8
TBC10
SEE
W9CBW3NA
LINE 11
A
LAA
TBC4
120VAC
7
CRF
4
FR7
TBC1
CAL
7
EMERGENCY
PULL STRINGS
1
4
CAK
SHPE2:
EMERGENCY
PULL STRINGS
IN CBW
3-WIRE
CIRCUIT
SEE W9CBW3SD
TBC2
CAJ
SHMD:
DISCONNECT
MOTOR
CAH
V
OL
K
CAG
TBC3B
SEE
W9CBW3SE
LINE 11
V4
24VDC
TBC7
BLK
CPPEF
PHOTOEYE
FORWARD
BELT 00
WHT
RED
SEE
W9CBW3NC
LINE 00
TBC2G
2G
TO
MICRO-
PROCESSOR
INPUT
OEMTA4-03
TBB5
TBC8
H1A
SKFR:
FORWARD/
REVERSE
K
FK4
CRF
MANUAL
OPERATION
CRF
FR1
TBC5
OEMTA5-10
CRBRM
CLOSES
WHEN
MICRO-
PROCESSOR
DESIRES
INTERMEDIATE BELT
FORWARD
OEMTA5-19
TBC6
CSRBR
BRK
AUX.
CSRBF
MOVE
BELT
FORWARD
SHFR:
FORWARD/
REVERSE
FWD
REV
PE6
FR4
CSRBF
BFK
AUX.
CSRBR
MOVE
BELT
REVERSE
W9CBW3LI
2021074B
SEE
W9CBW3NA
LINE 01
2F
TBC2F
01
02
03
04
05
06
07
08
09
10
11

W9CBW3LI
2021074B

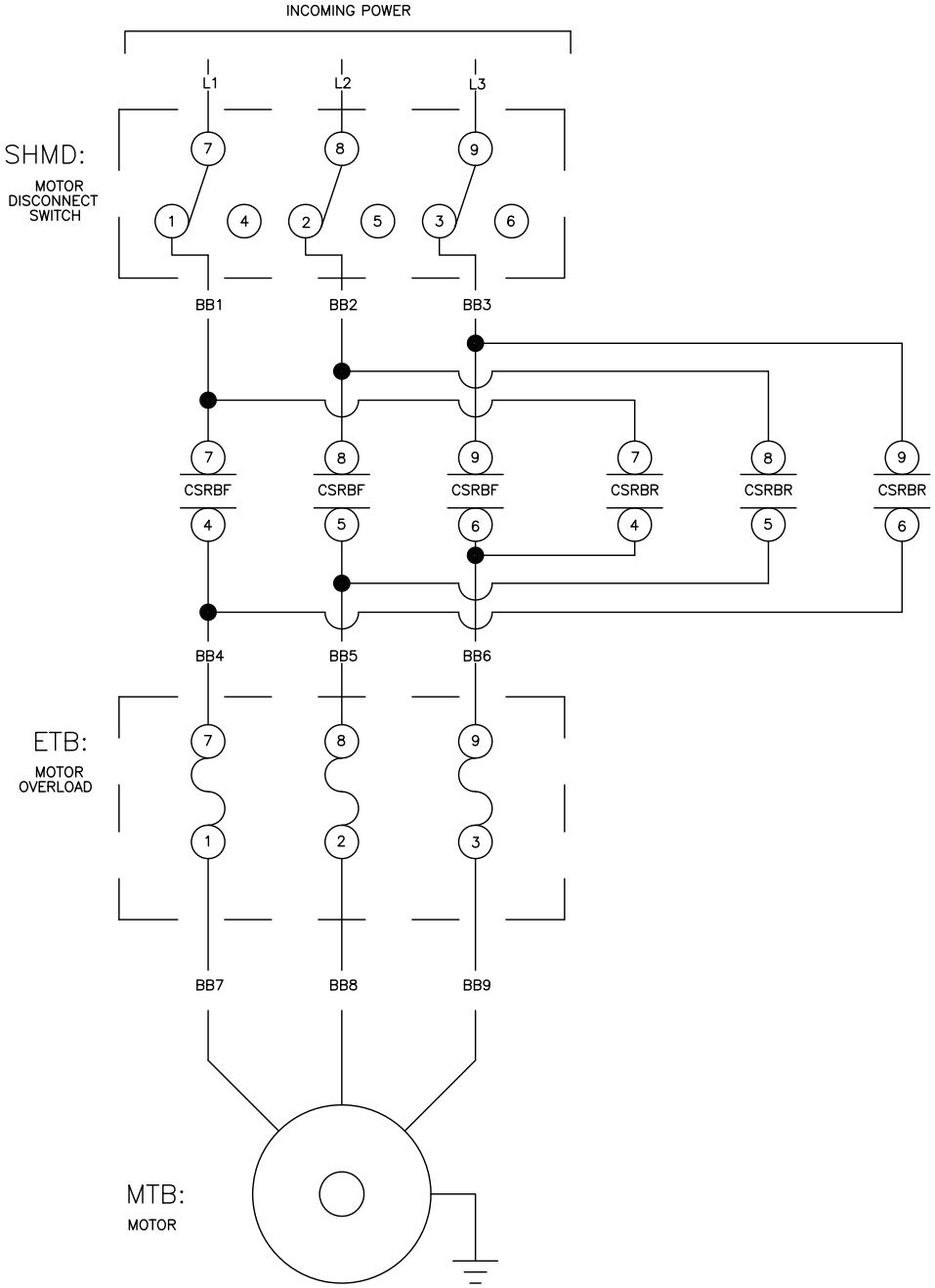

W9CBW3LI

SCHEMATIC: INTERMEDIATE LOAD CONVEYOR

PELLERIN MILNOR CORPORATION

W9CBW3LI
2021074B

12 13 14 15 16 17

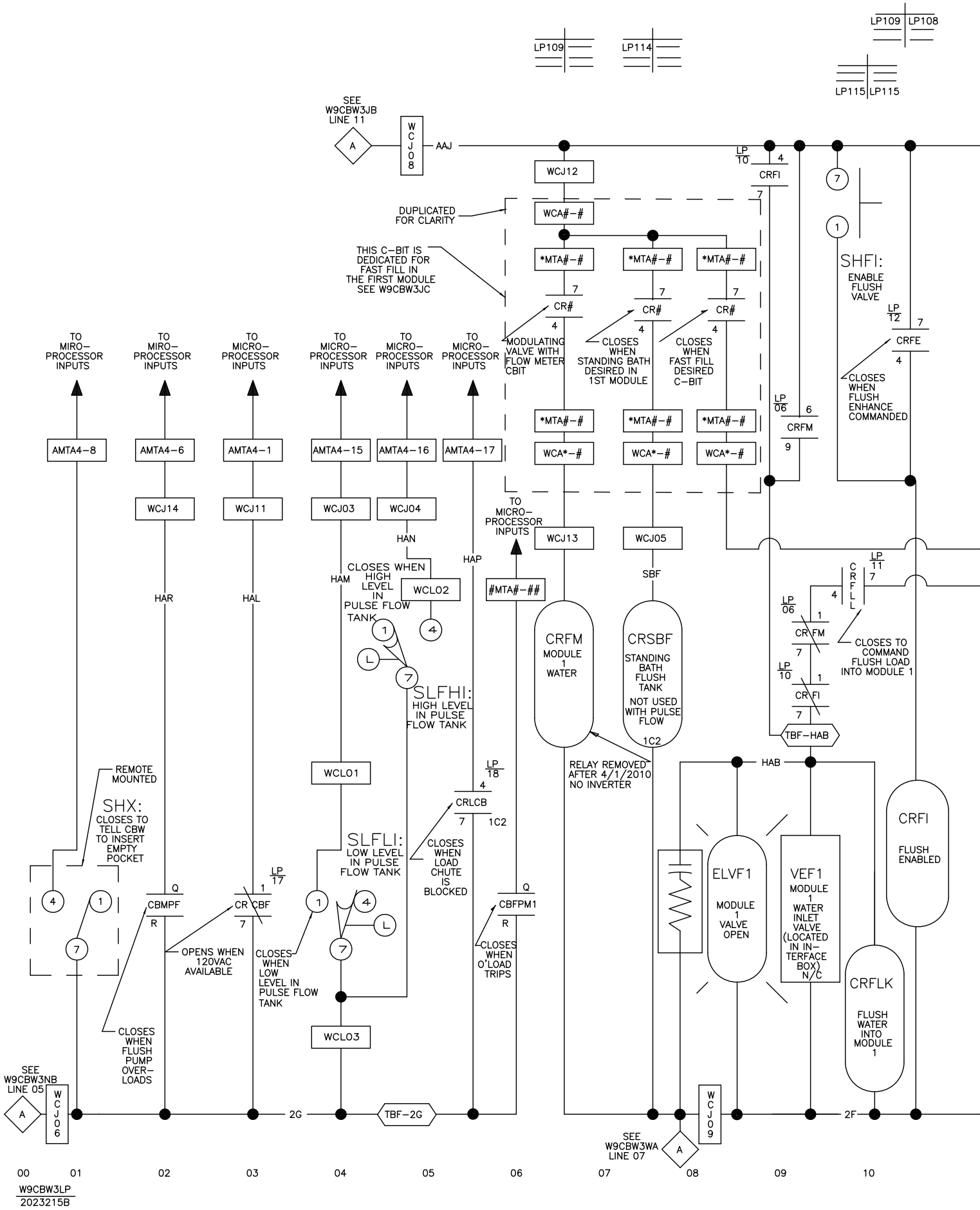
LP109
LP108
LP109
LP114
LP115
LP115
SEE W9CBW3JB LINE 11
A
WCJ08
AAJ
WCJ12
LP 10
4
CRFI
7
DUPLICATED FOR CLARITY
WCA#-#
THIS C-BIT IS DEDICATED FOR FAST FILL IN THE FIRST MODULE SEE W9CBW3JC
*MTA#-#
*MTA#-#
*MTA#-#
7
CR#
4
CR#
4
CR#
4
MODULATING VALVE WITH FLOW METER CBIT
CLOSES WHEN STANDING BATH DESIRED IN 1ST MODULE
CLOSES WHEN FAST FILL DESIRED C-BIT
SHFI:
ENABLE FLUSH VALVE
LP 12
7
CRFE
4
CLOSES WHEN FLUSH ENHANCE COMMANDED
LP 06
6
CRFM
9
TO MIRO-PROCESSOR INPUTS
TO MIRO-PROCESSOR INPUTS
TO MICRO-PROCESSOR INPUTS
TO MICRO-PROCESSOR INPUTS
TO MICRO-PROCESSOR INPUTS
TO MICRO-PROCESSOR INPUTS
AMTA4-8
AMTA4-6
AMTA4-1
AMTA4-15
AMTA4-16
AMTA4-17
*MTA#-#
*MTA#-#
*MTA#-#
WCA*-#
WCA*-#
WCA*-#
WCJ14
WCJ11
WCJ03
WCJ04
TO MICRO-PROCESSOR INPUTS
WCJ13
WCJ05
HAN
HAP
HAM
CLOSES WHEN HIGH LEVEL IN PULSE FLOW TANK
WCL02
#MTA#-##
SBF
HAR
HAL
CRFM
MODULE 1 WATER
CRSBF
STANDING BATH FLUSH TANK
NOT USED WITH PULSE FLOW
1C2
LP 11
7
CRFLL
4
LP 06
1
CRFM
7
CLOSES TO COMMAND FLUSH LOAD INTO MODULE 1
LP 10
1
CRFI
7
TBF-HAB
SLFHI:
HIGH LEVEL IN PULSE FLOW TANK
REMOTE MOUNTED
SHX:
CLOSES TO TELL CBW TO INSERT EMPTY POCKET
WCL01
LP 18
4
CRLCB
7
1C2
RELAY REMOVED AFTER 4/1/2010 NO INVERTER
HAB
SLFLI:
LOW LEVEL IN PULSE FLOW TANK
CLOSES WHEN LOAD CHUTE IS BLOCKED
LP 17
1
CR CBF
7
Q
CBMPF
R
Q
CBFPM1
R
ELVF1
MODULE 1 VALVE OPEN
VEF1
MODULE 1 WATER INLET VALVE (LOCATED IN IN-TERFACE BOX) N/C
CRFI
FLUSH ENABLED
OPENS WHEN 120VAC AVAILABLE
CLOSES WHEN LOW LEVEL IN PULSE FLOW TANK
CLOSES WHEN O'LOAD TRIPS
CRFLK
FLUSH WATER INTO MODULE 1
CLOSES WHEN FLUSH PUMP OVER-LOADS
WCL03
SEE W9CBW3NB LINE 05
A
WCJ06
2G
TBF-2G
WCJ09
2F
SEE W9CBW3WA LINE 07
A
00
01
02
03
04
05
06
07
08
09
10
W9CBW3LP
2023215B

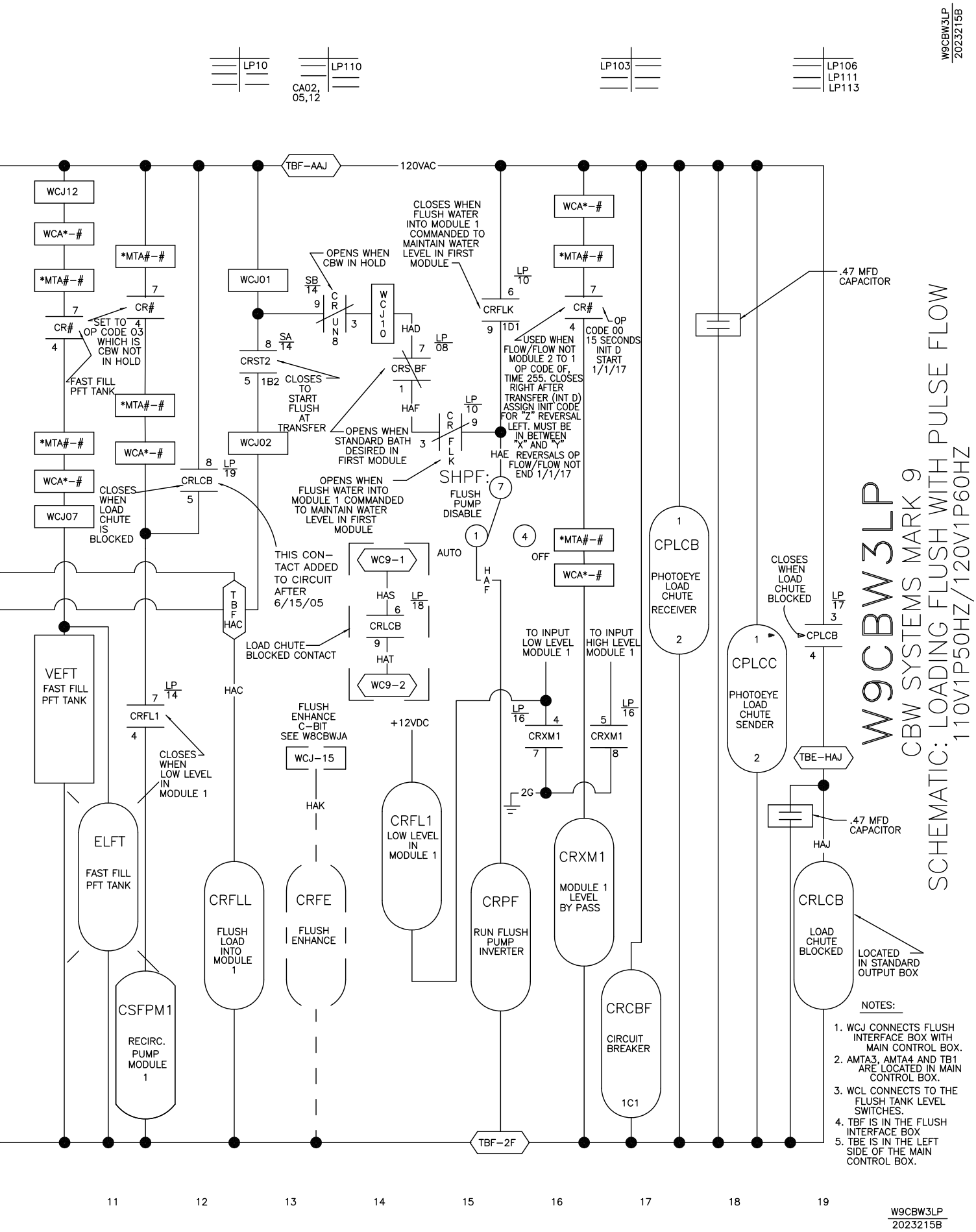
W9CBW3LP
2023215B
LP10
LP110
CA02, 05,12
LP103
LP106
LP111
LP113
TBF-AAJ
120VAC
WCJ12
WCA*-#
*MTA#-#
CR#
SET TO OP CODE 03 WHICH IS CBW NOT IN HOLD
FAST FILL PFT TANK
WCJ01
WCJ02
WCJ07
OPENS WHEN CBW IN HOLD
CRUN
WCJ10
CRST2
CLOSES TO START FLUSH AT TRANSFER
CRSBF
OPENS WHEN STANDARD BATH DESIRED IN FIRST MODULE
CRFLK
CLOSES WHEN FLUSH WATER INTO MODULE 1 COMMANDED TO MAINTAIN WATER LEVEL IN FIRST MODULE
USED WHEN FLOW/FLOW NOT MODULE 2 TO 1 OP CODE 0F, TIME 255. CLOSES RIGHT AFTER TRANSFER (INT D) ASSIGN INIT CODE FOR "Z" REVERSAL LEFT. MUST BE IN BETWEEN "X" AND "Y" REVERSALS OP FLOW/FLOW NOT END 1/1/17
OP CODE 00 15 SECONDS INIT D START 1/1/17
.47 MFD CAPACITOR
CRLCB
CLOSES WHEN LOAD CHUTE IS BLOCKED
THIS CONTACT ADDED TO CIRCUIT AFTER 6/15/05
OPENS WHEN FLUSH WATER INTO MODULE 1 COMMANDED TO MAINTAIN WATER LEVEL IN FIRST MODULE
SHPF:
FLUSH PUMP DISABLE
AUTO
OFF
WC9-1
WC9-2
HAS
HAT
HAC
HAF
HAD
HAE
HAK
HAJ
TBF-HAC
LOAD CHUTE BLOCKED CONTACT
VEFT
FAST FILL PFT TANK
CRFL1
CLOSES WHEN LOW LEVEL IN MODULE 1
FLUSH ENHANCE C-BIT SEE W8CBWJA
WCJ-15
+12VDC
TO INPUT LOW LEVEL MODULE 1
TO INPUT HIGH LEVEL MODULE 1
CRXM1
2G
CPLCB
PHOTOEYE LOAD CHUTE RECEIVER
CPLCC
PHOTOEYE LOAD CHUTE SENDER
CLOSES WHEN LOAD CHUTE BLOCKED
TBE-HAJ
ELFT
FAST FILL PFT TANK
CSFPM1
RECIRC. PUMP MODULE 1
CRFLL
FLUSH LOAD INTO MODULE 1
CRFE
FLUSH ENHANCE
CRFL1
LOW LEVEL IN MODULE 1
CRPF
RUN FLUSH PUMP INVERTER
CRXM1
MODULE 1 LEVEL BY PASS
CRCBF
CIRCUIT BREAKER
CRLCB
LOAD CHUTE BLOCKED
LOCATED IN STANDARD OUTPUT BOX
TBF-2F
W9CBW3LP
CBW SYSTEMS MARK 9
SCHEMATIC: LOADING FLUSH WITH PULSE FLOW
110V1P50HZ/120V1P60HZ
PELLERIN MILNOR CORPORATION
NOTES:
1. WCJ CONNECTS FLUSH INTERFACE BOX WITH MAIN CONTROL BOX.
2. AMTA3, AMTA4 AND TB1 ARE LOCATED IN MAIN CONTROL BOX.
3. WCL CONNECTS TO THE FLUSH TANK LEVEL SWITCHES.
4. TBF IS IN THE FLUSH INTERFACE BOX
5. TBE IS IN THE LEFT SIDE OF THE MAIN CONTROL BOX.
11
12
13
14
15
16
17
18
19
W9CBW3LP
2023215B

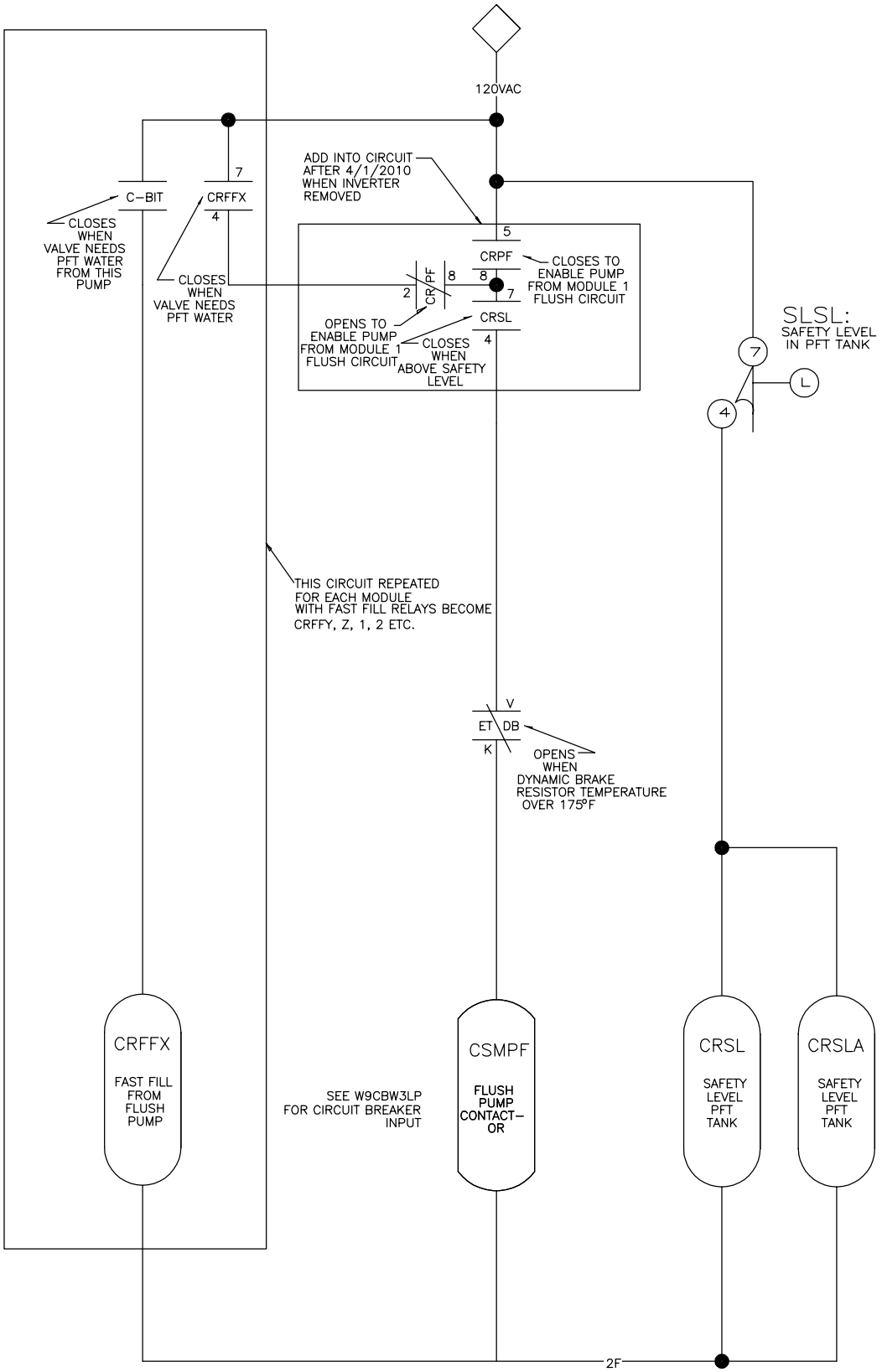

00 01 02 03 04 05 06 07 08 09 10

W9CBW3LP1
2011432B

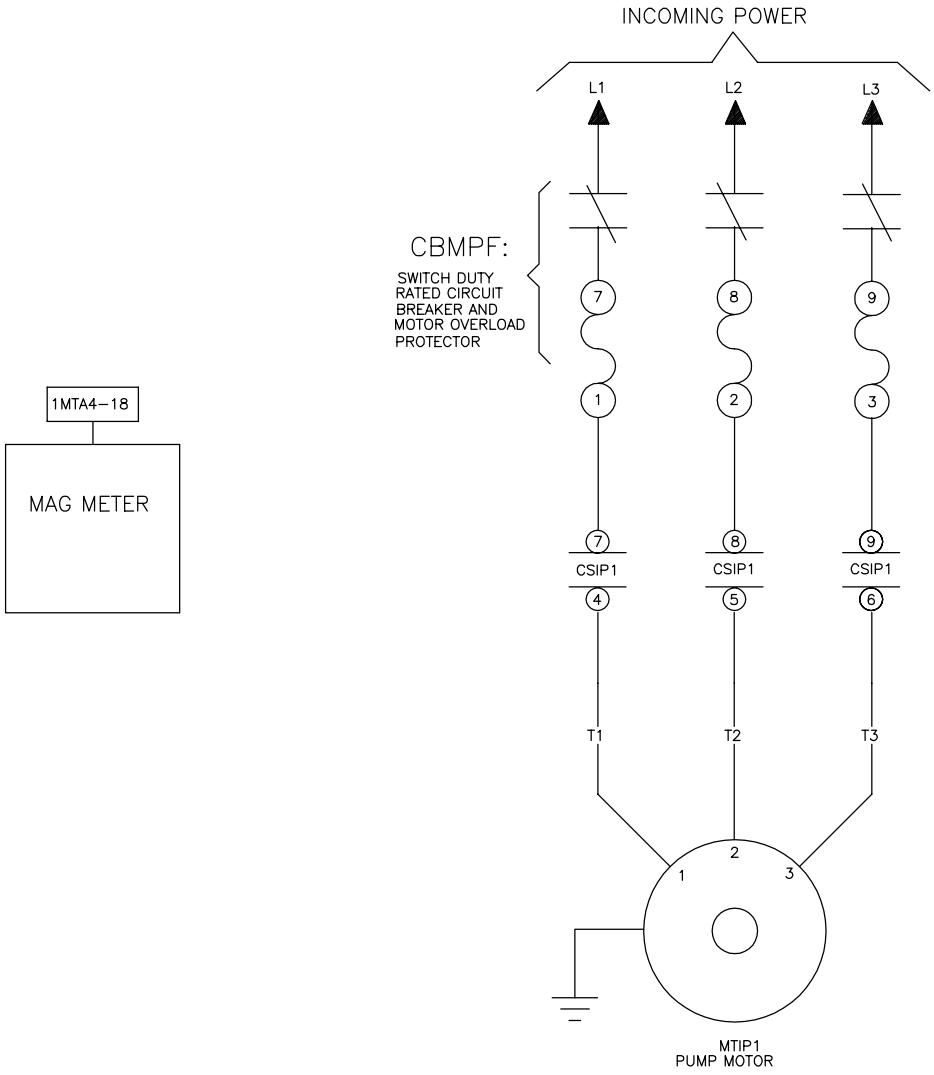

W9CBW3LP1

CBW SYSTEMS MARK 9

SCHEMATIC: PULSE FLOW TANK TO LOAD CHUTE

110V1P50HZ/120V1P60HZ

PELLERIN MILNOR CORPORATION

11 12 13 14 15 16 17 18 19

* C–BIT NUMBER FOR THIS PUMP MUST BE LOWER THAN C–BIT NUMBER FOR STANDARD MID MODULE PUMP (CRMPFE)

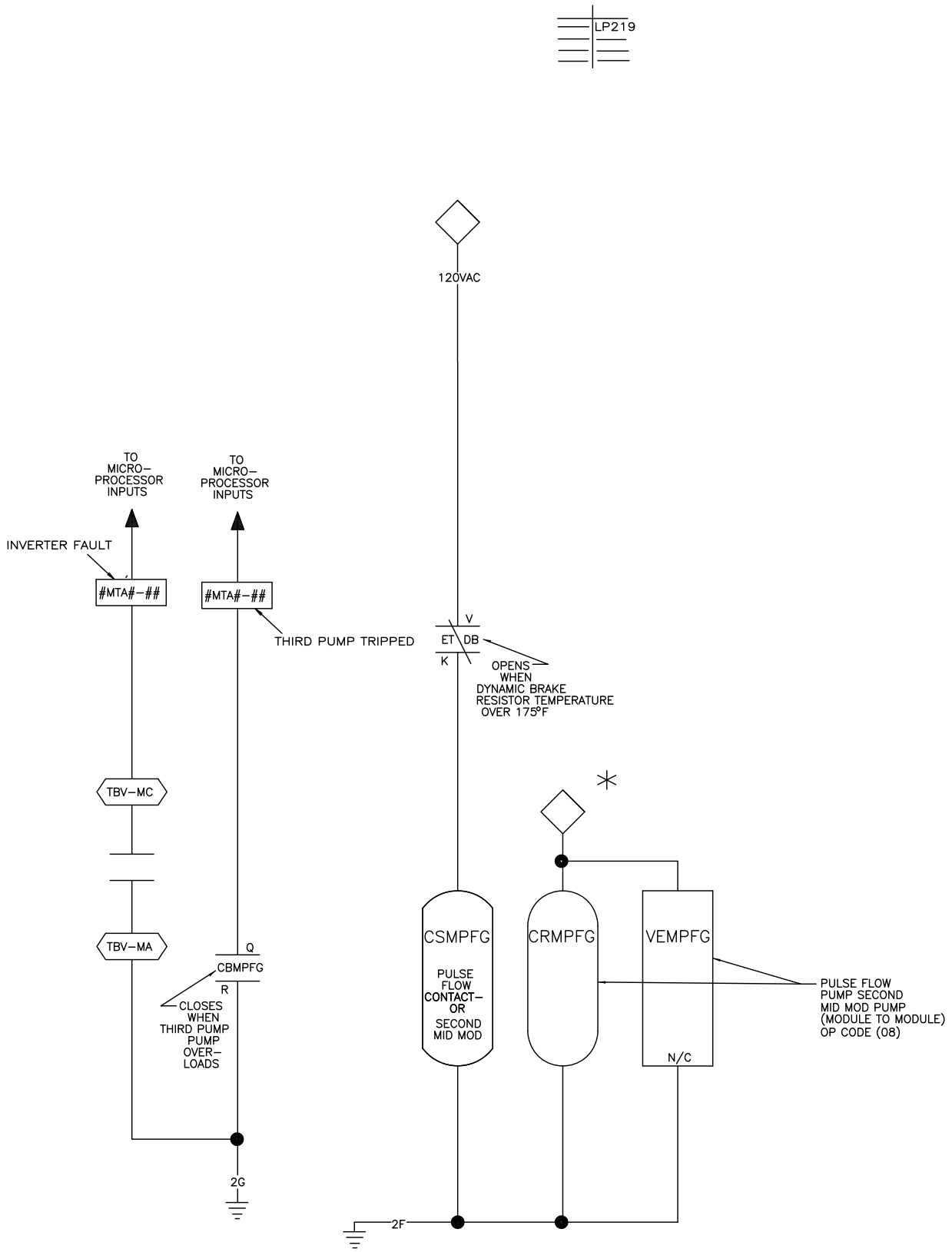

W9CBW3LP2
2023202B

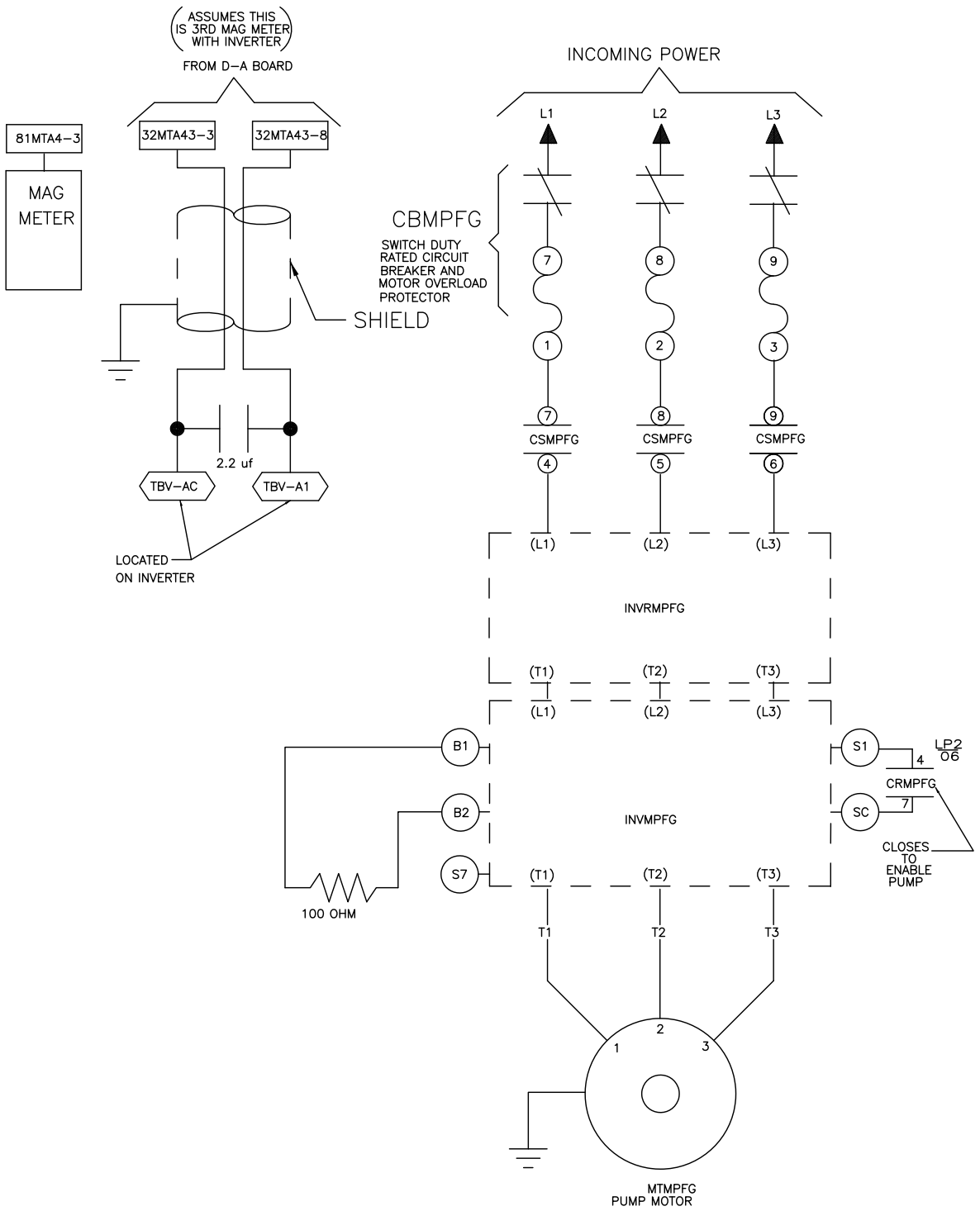

W9CBW3LP2

CBW SYSTEMS MARK 9

SCHEMATIC: PULSE FLOW MODULE TO MODULE

CLOSEST TO LOADEND (SECOND MID MODULE PUMP)

110V1P50HZ/120V1P60HZ

PELLERIN MILNOR CORPORATION

11 12 13 14 15 16 17 18 19

* HIGHEST NUMBERED PULSE FLOW PUMP C–BIT SHOULD BE USED FOR MAIN PULSE FLOW PUMP.

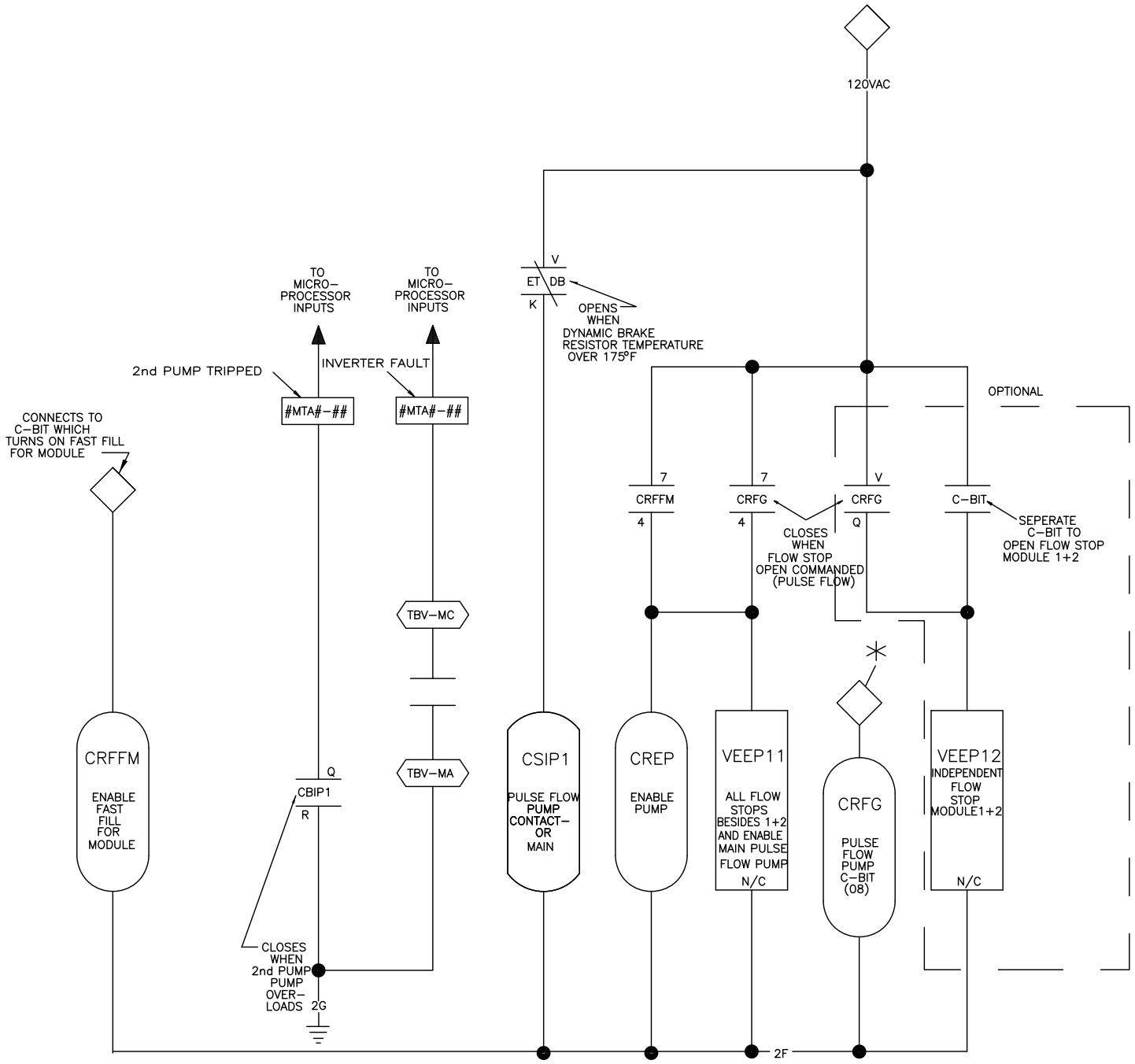

W9CBW3LP3
2018192B

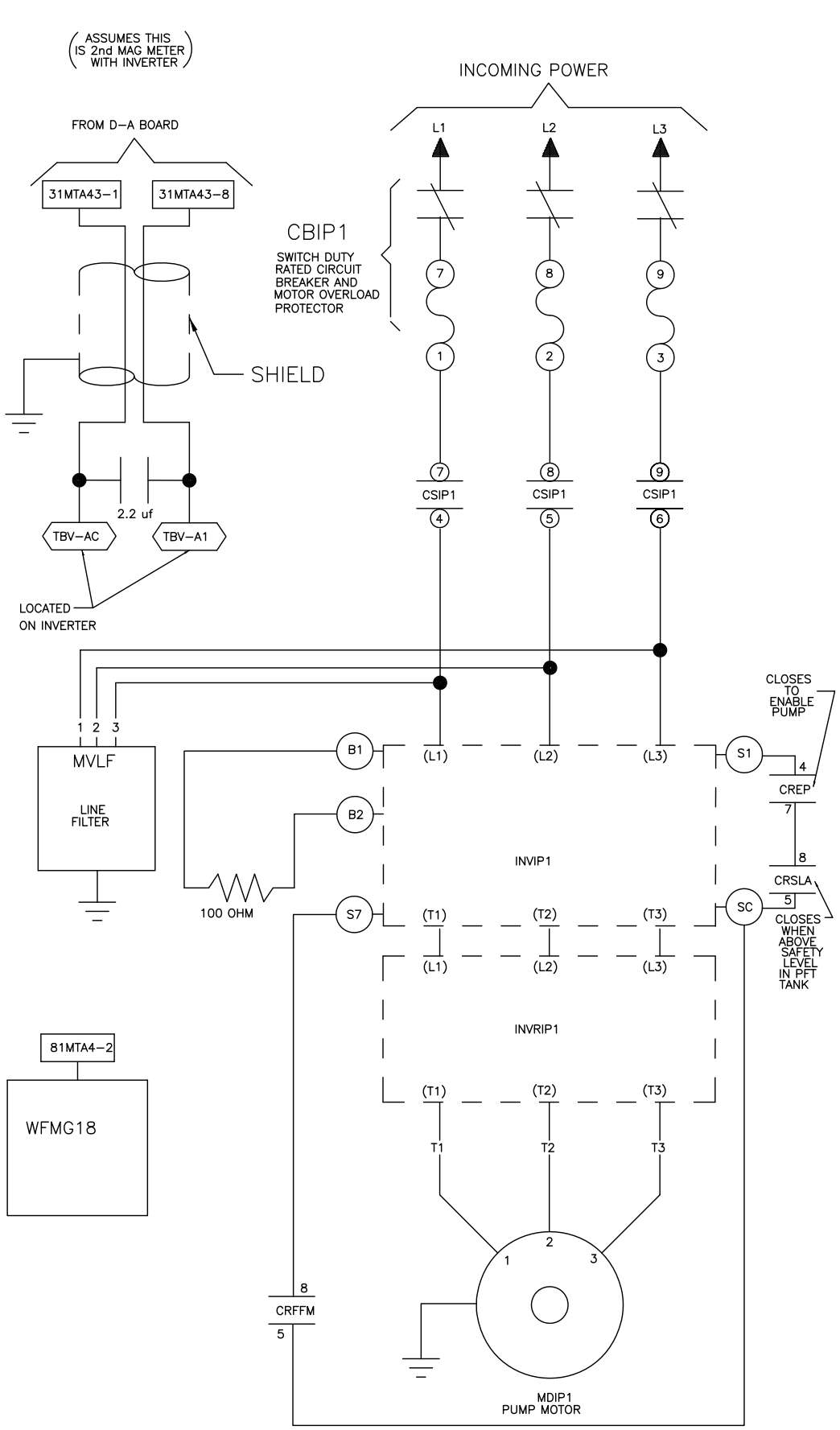

W9CBW3LP3
CBW SYSTEMS MARK 9
SCHEMATIC: PULSE FLOW TANK TO LAST ZONE
110V1P50HZ/120V1P60HZ
PELLERIN MILNOR CORPORATION

W9CBW3LP3
2018192B

* C–BIT NUMBER FOR THIS PUMP MUST BE LOWER THAN C–BIT NUMBER FOR MAIN PULSE FLOW PUMP (CRFG)

EXAMPLE: MAIN PULSE FLOW PUMP C–BIT IS 16.
THEN, THIS PUMPS C–BIT NUMBER MUST BE LOWER THAN 16.

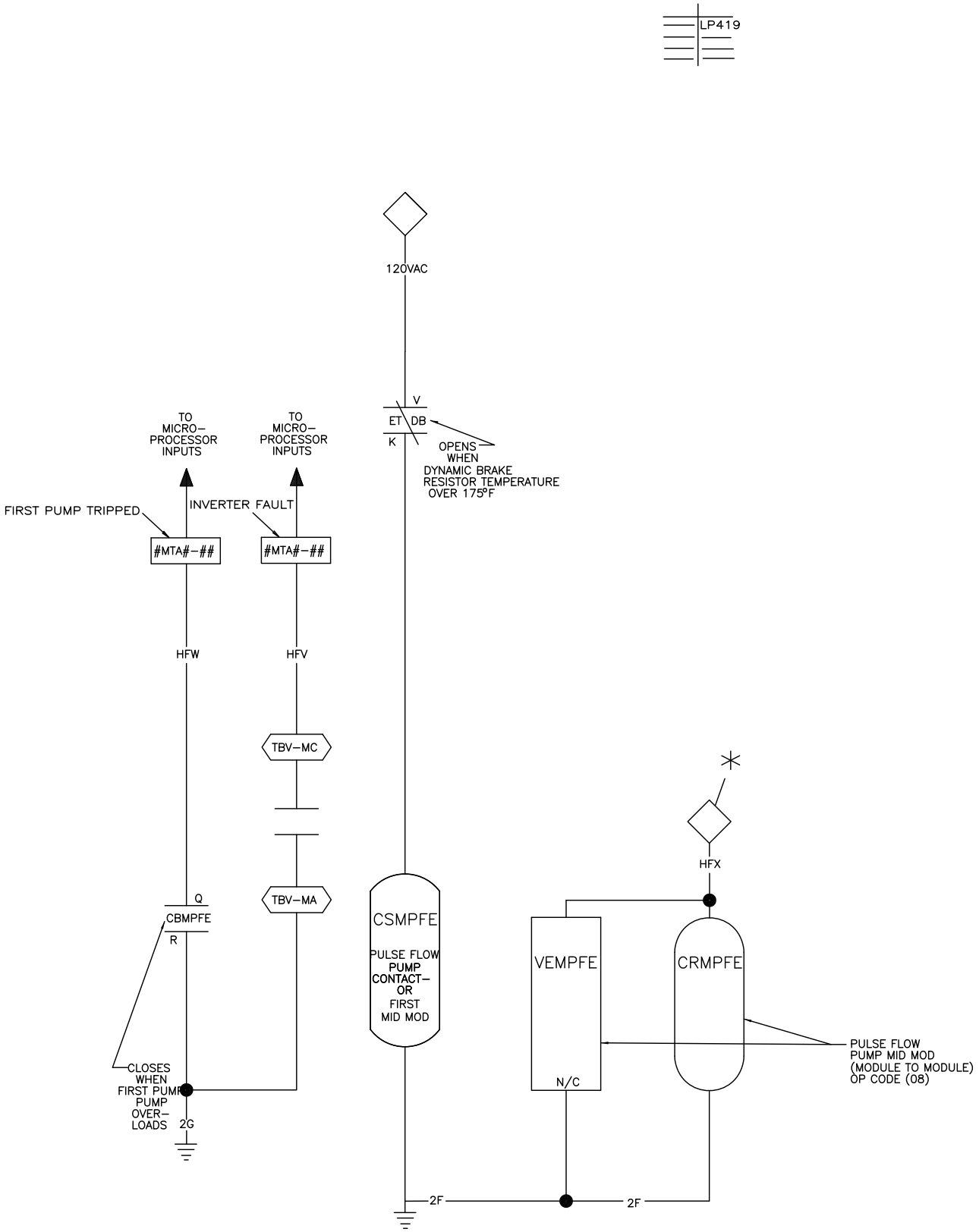

00 01 02 03 04 05 06 07 08 09 10

W9CBW3LP4
2023202B

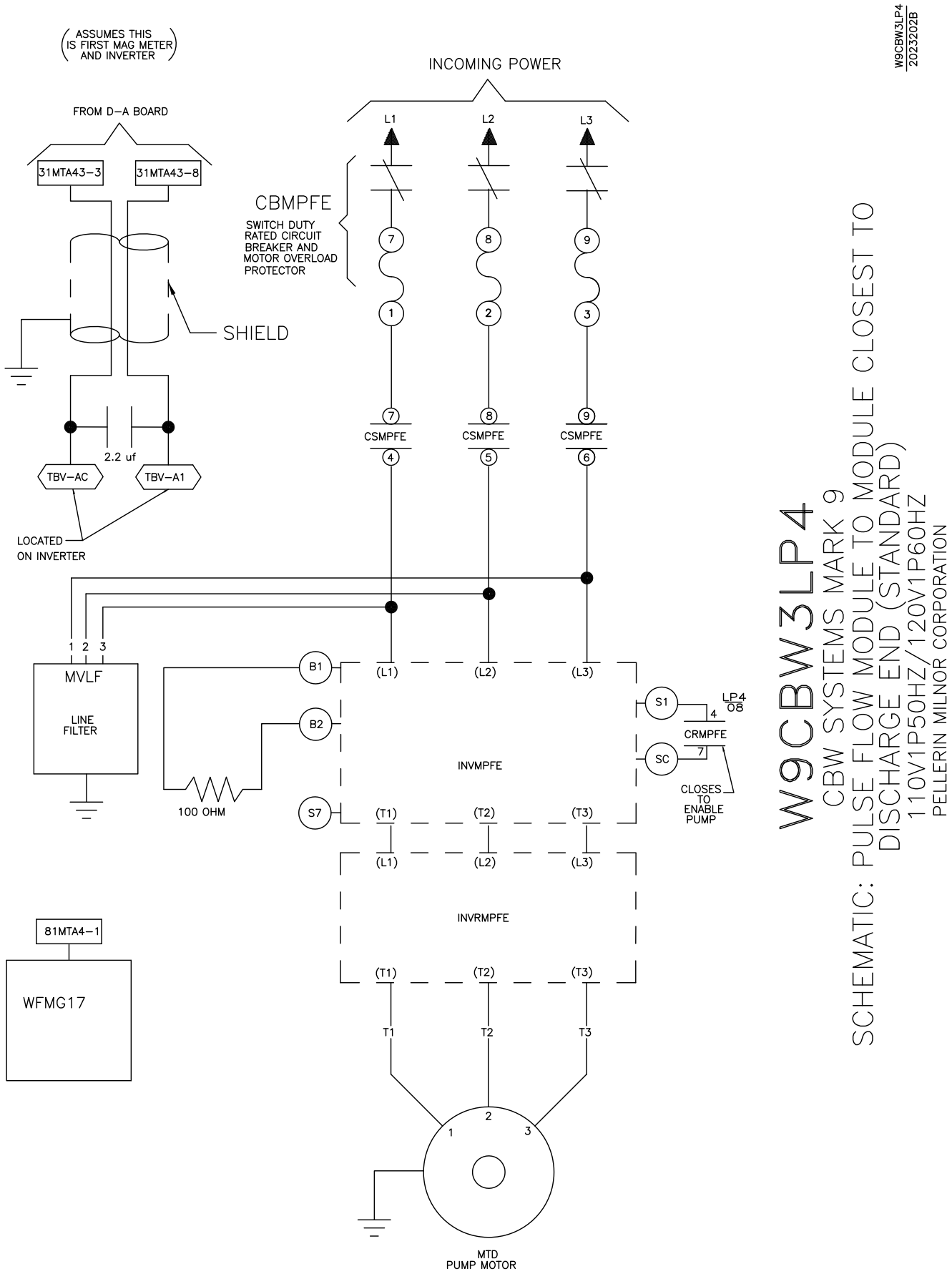
W9CBW3LP4
2023202B
ASSUMES THIS IS FIRST MAG METER AND INVERTER
INCOMING POWER
FROM D–A BOARD
31MTA43–3
31MTA43–8
L1
L2
L3
CBMPFE
SWITCH DUTY RATED CIRCUIT BREAKER AND MOTOR OVERLOAD PROTECTOR
SHIELD
2.2 uf
TBV–AC
TBV–A1
LOCATED ON INVERTER
CSMPFE
MVLF
LINE FILTER
B1
B2
S7
100 OHM
INVMPFE
INVRMPFE
S1
SC
LP4
CRMPFE
CLOSES TO ENABLE PUMP
81MTA4–1
WFMG17
T1
T2
T3
MTD PUMP MOTOR
W9CBW3LP4
CBW SYSTEMS MARK 9
SCHEMATIC: PULSE FLOW MODULE TO MODULE CLOSEST TO DISCHARGE END (STANDARD)
110V1P50HZ/120V1P60HZ
PELLERIN MILNOR CORPORATION

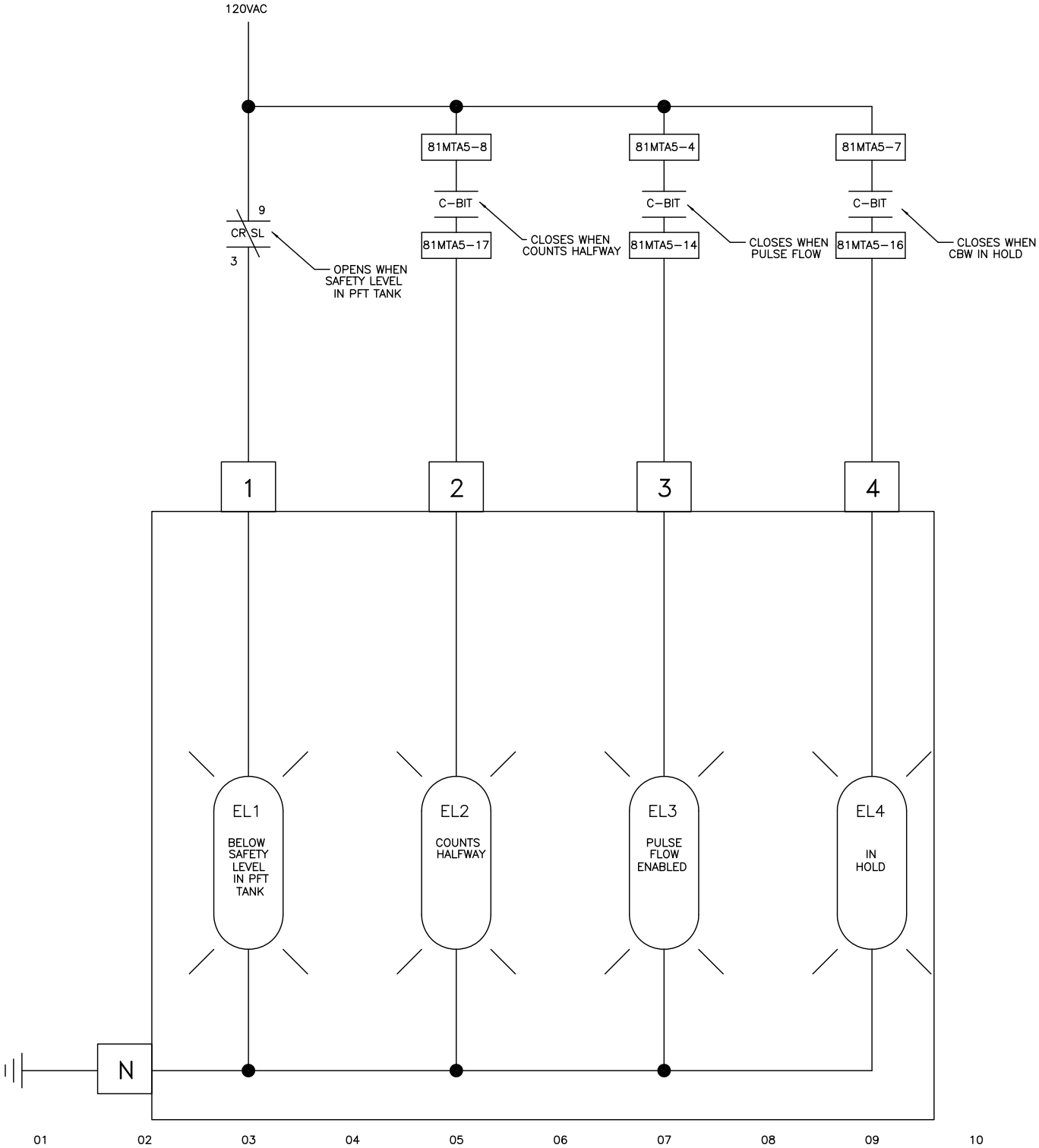

W9CBW3LP5
2015184B

11 12 13 14 15 16 17 18 19

W9CBW3LP5

CBW SYSTEMS MARK 9
SCHEMATIC: PULSE FLOW LIGHT STAND
110V1P50HZ/120V1P60HZ

PELLERIN MILNOR CORPORATION

W9CBW3LP5
2015184B

W9CBW3LP5
2015184B

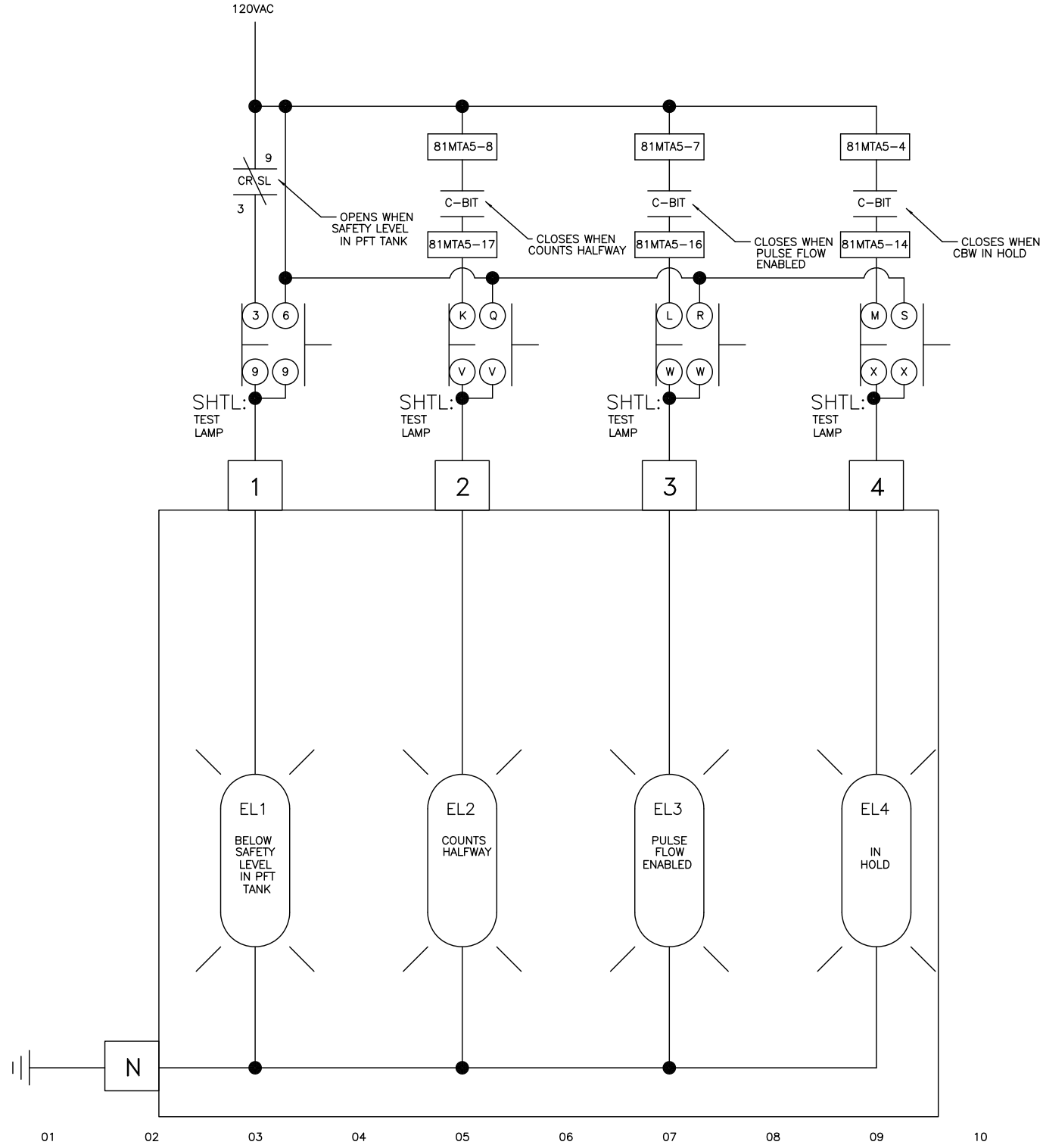

W9CBW3LP5A
2019245B

11

12

13

14

15

16

17

18

19

W9CBW3LP5A

CBW SYSTEMS MARK 9

SCHEMATIC: PULSE FLOW LIGHT STAND + LAMP TEST

110V1P50HZ/120V1P60HZ

PELLERIN MILNOR CORPORATION

W9CBW3LP5A
2019245B

W9CBW3LP5A
2019245B

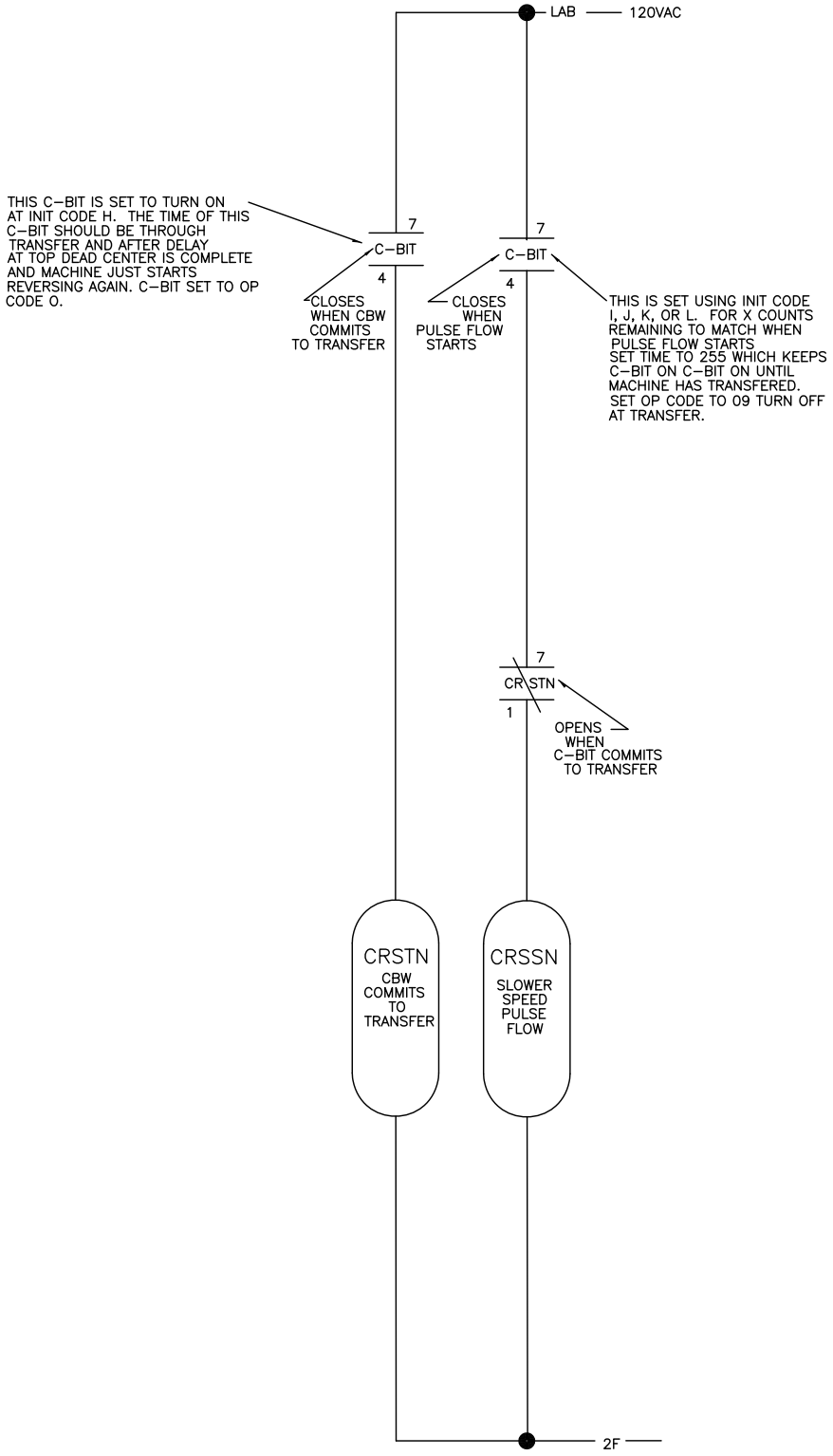

00 01 02 03 04 05 06 07 08 09 10

W9CBW3LP6
2015505B

OPERATION

A) AT START OF CYCLE MACHINE RUNS NORMAL SPEED.
B) WHEN PULSE FLOW STARTS MACHINE GOES TO LOWER SPEED.
C) WHEN MACHINE COMMITS TO TRANSFER NORMAL SPEED IS COMMANDED.

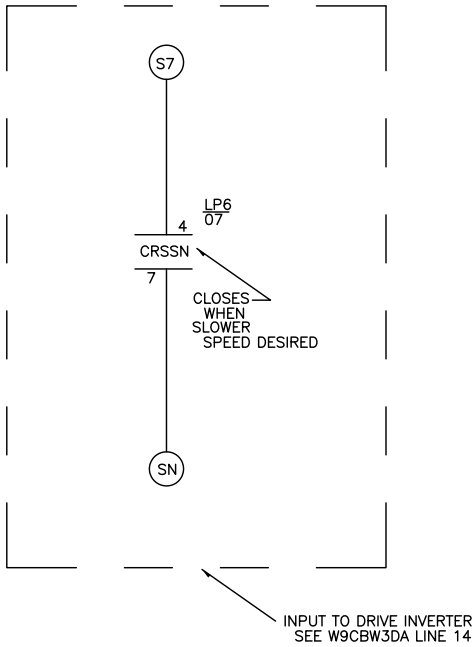

W9CBW3LP6

CBW SYSTEMS MARK 9

SCHEMATIC: SLOW DOWN WHEN PULSE FLOW

110V1P50HZ/120V1P60HZ

PELLERIN MILNOR CORPORATION

11 12 13 14 15 16 17 18 19

* LOWEST C–BIT OF THE PULSE FLOW PUMP C–BITS.

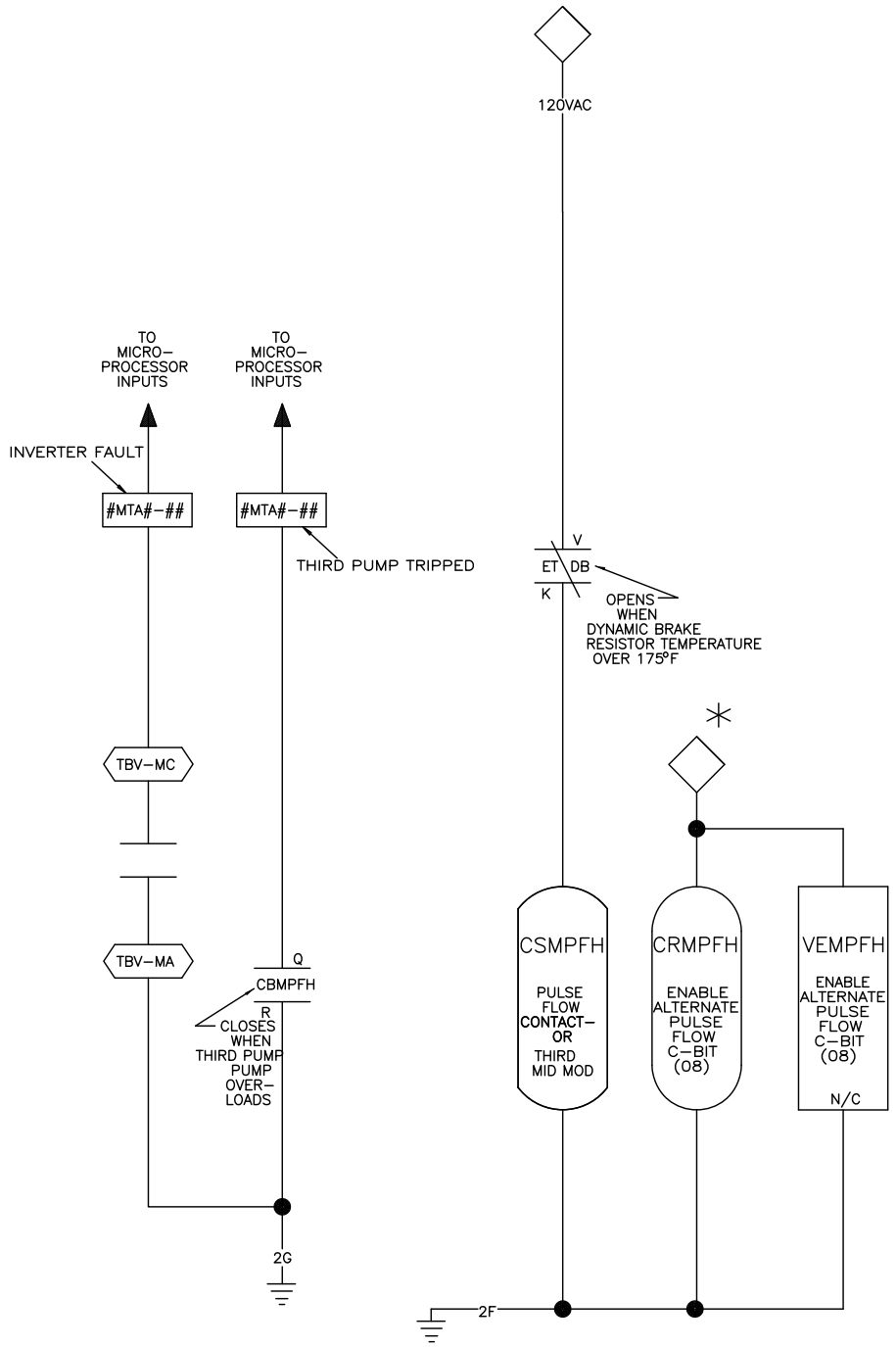

00 01 02 03 04 05 06 07 08 09 10

W9CBW3LPA
2023412B

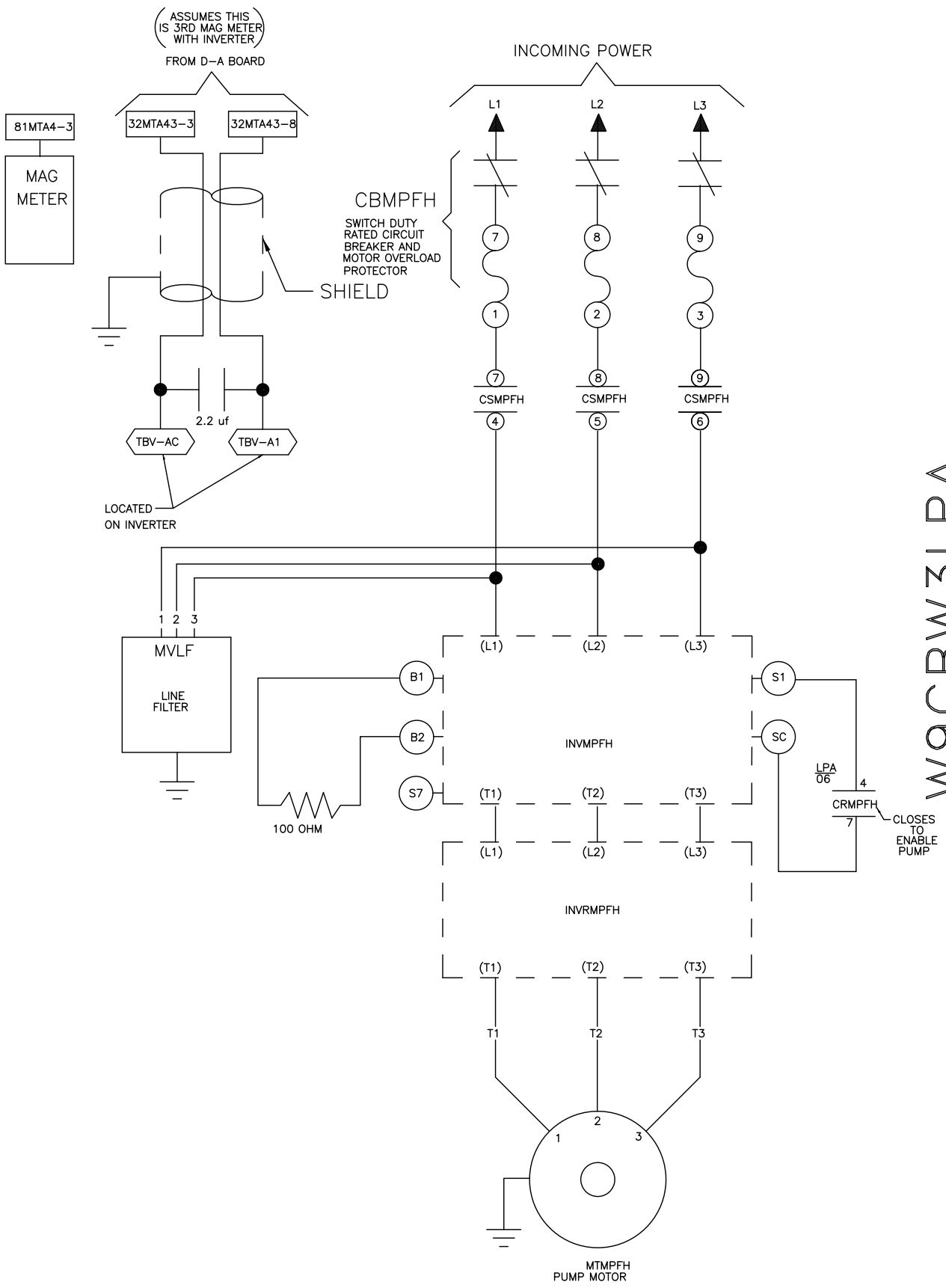

W9CBW3LPA

CBW SYSTEMS MARK 9

SCHEMATIC: ALTERNATE PULSE FLOW PUMP

110V1P50HZ/120V1P60HZ

PELLERIN MILNOR CORPORATION

11 12 13 14 15 16 17 18 19

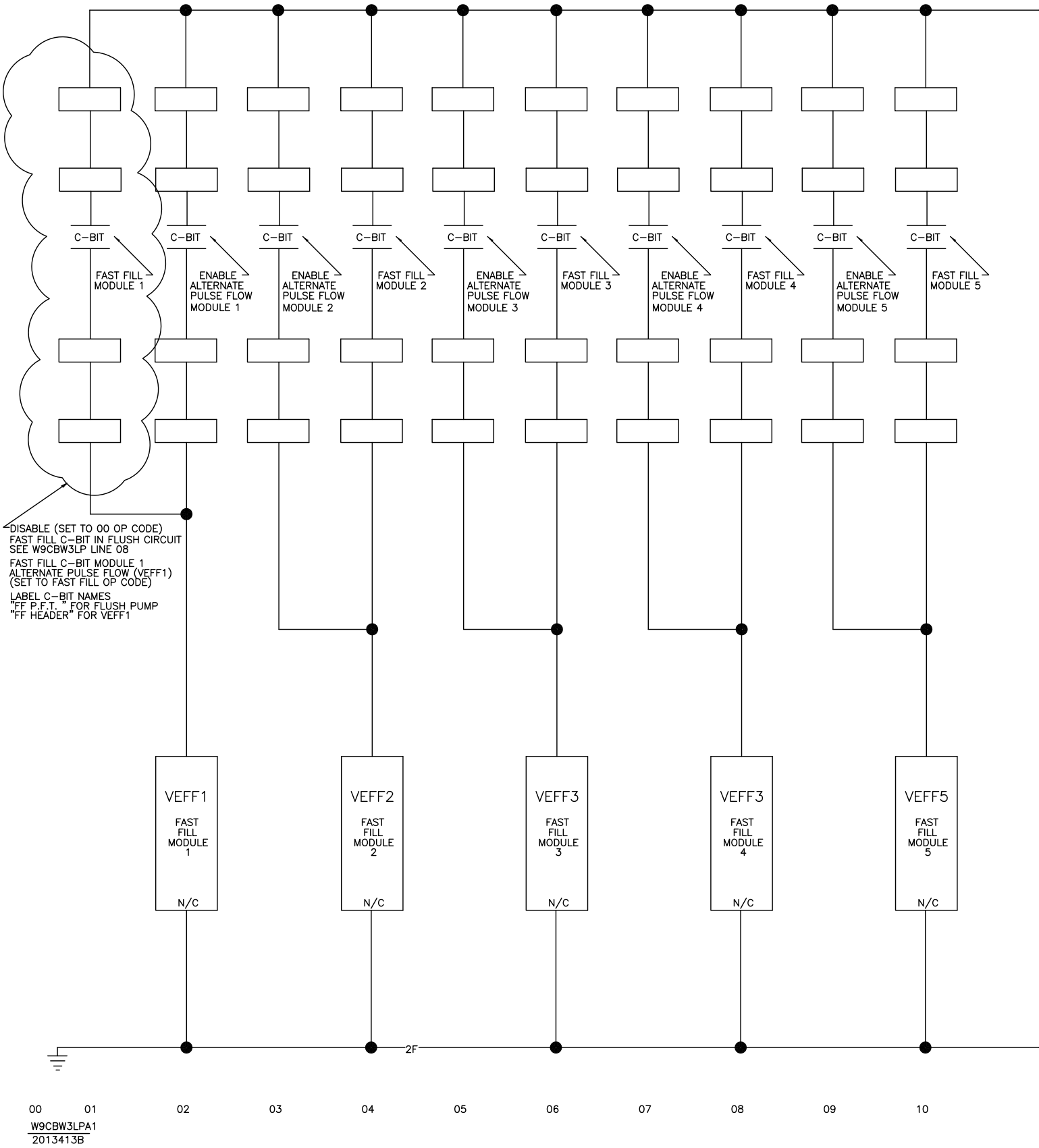
C–BIT
FAST FILL MODULE 1
ENABLE ALTERNATE PULSE FLOW MODULE 1
ENABLE ALTERNATE PULSE FLOW MODULE 2
FAST FILL MODULE 2
ENABLE ALTERNATE PULSE FLOW MODULE 3
FAST FILL MODULE 3
ENABLE ALTERNATE PULSE FLOW MODULE 4
FAST FILL MODULE 4
ENABLE ALTERNATE PULSE FLOW MODULE 5
FAST FILL MODULE 5
DISABLE (SET TO 00 OP CODE) FAST FILL C–BIT IN FLUSH CIRCUIT SEE W9CBW3LP LINE 08
FAST FILL C–BIT MODULE 1 ALTERNATE PULSE FLOW (VEFF1) (SET TO FAST FILL OP CODE)
LABEL C–BIT NAMES "FF P.F.T. " FOR FLUSH PUMP "FF HEADER" FOR VEFF1
VEFF1 FAST FILL MODULE 1 N/C
VEFF2 FAST FILL MODULE 2 N/C
VEFF3 FAST FILL MODULE 3 N/C
VEFF3 FAST FILL MODULE 4 N/C
VEFF5 FAST FILL MODULE 5 N/C
2F
00 01 02 03 04 05 06 07 08 09 10
W9CBW3LPA1
2013413B

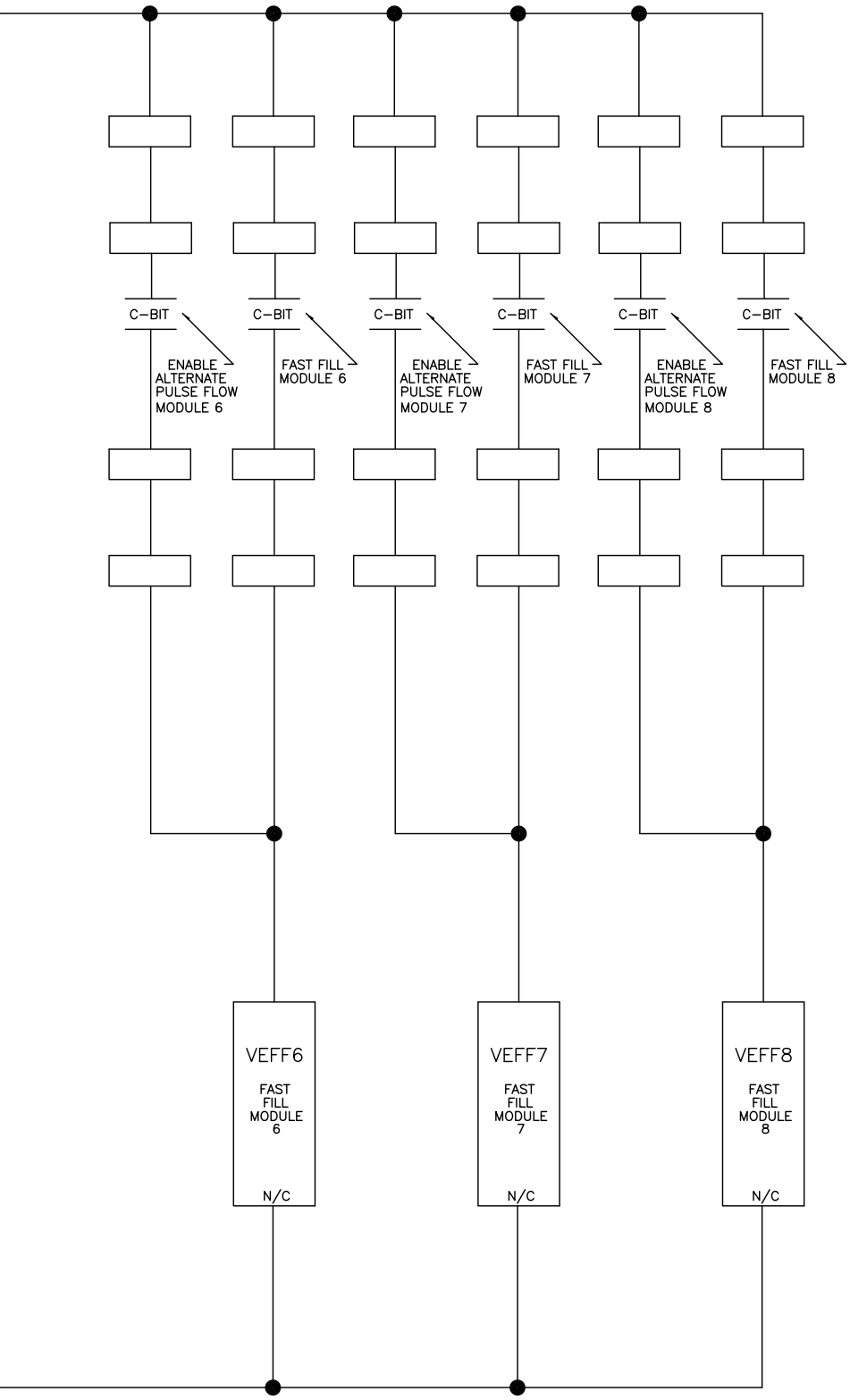

W9CBW3LPA1
CBW SYSTEMS MARK 9
SCHEMATIC: ALTERNATE PULSE FLOW MODULE 1–8
110V1P50HZ/120V1P60HZ
PELLERIN MILNOR CORPORATION

11 12 13 14 15 16 17 18 19

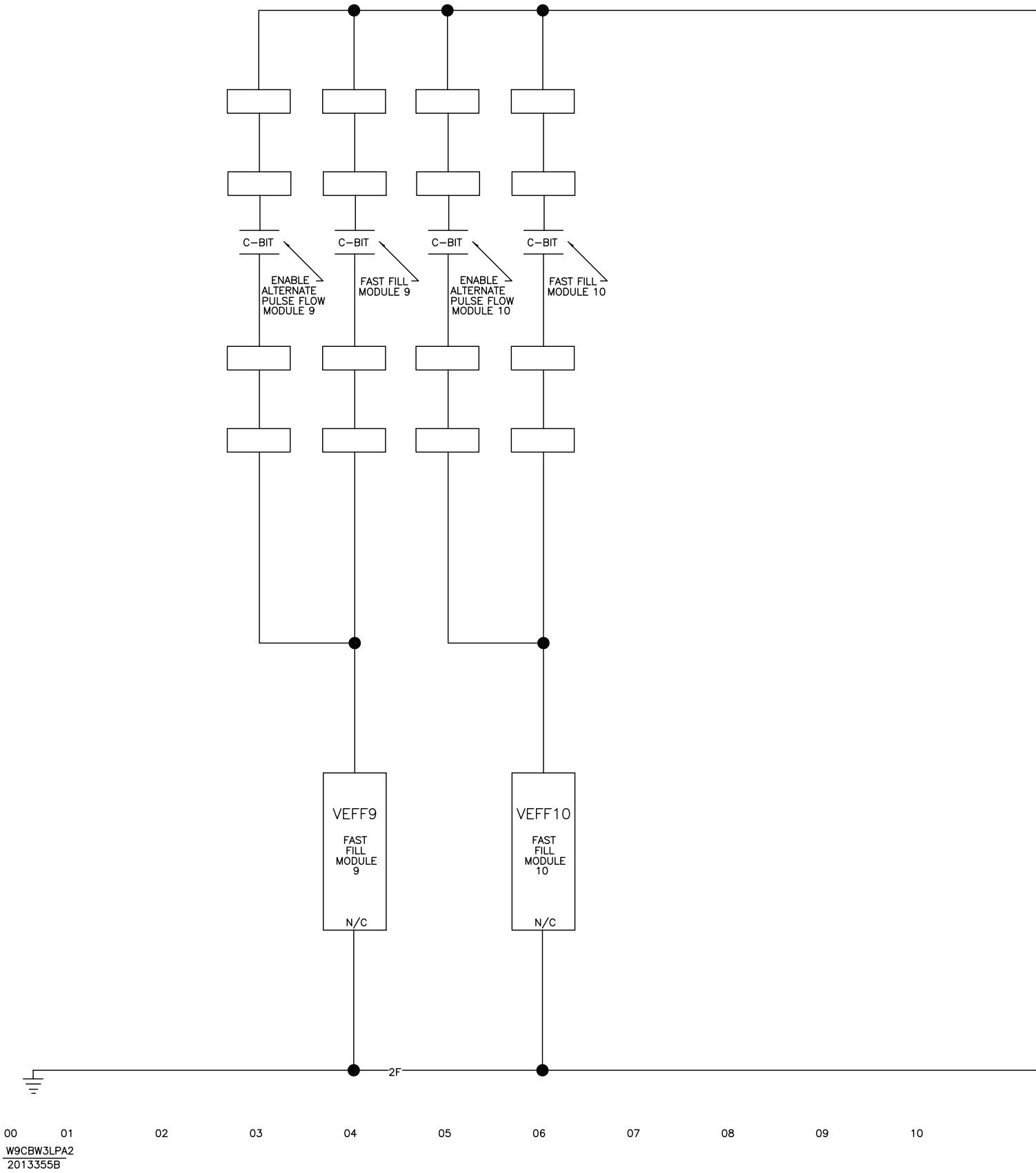
C–BIT
C–BIT
C–BIT
C–BIT
ENABLE ALTERNATE PULSE FLOW MODULE 9
FAST FILL MODULE 9
ENABLE ALTERNATE PULSE FLOW MODULE 10
FAST FILL MODULE 10
VEFF9
FAST FILL MODULE 9
N/C
VEFF10
FAST FILL MODULE 10
N/C
2F
00
01
02
03
04
05
06
07
08
09
10
W9CBW3LPA2
2013355B

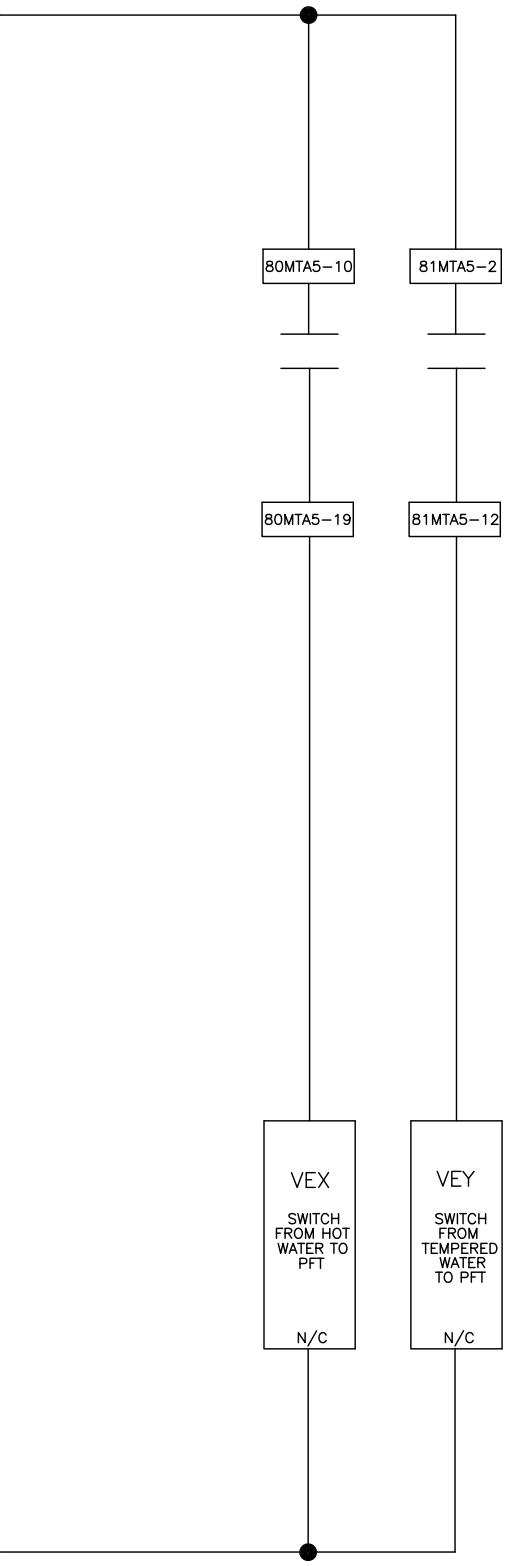

W9CBW3LPA2

CBW SYSTEMS MARK 9

SCHEMATIC: ALTERNATE PULSE FLOW MODULE 9-10

110V1P50HZ/120V1P60HZ

PELLERIN MILNOR CORPORATION

11 12 13 14 15 16 17 18 19

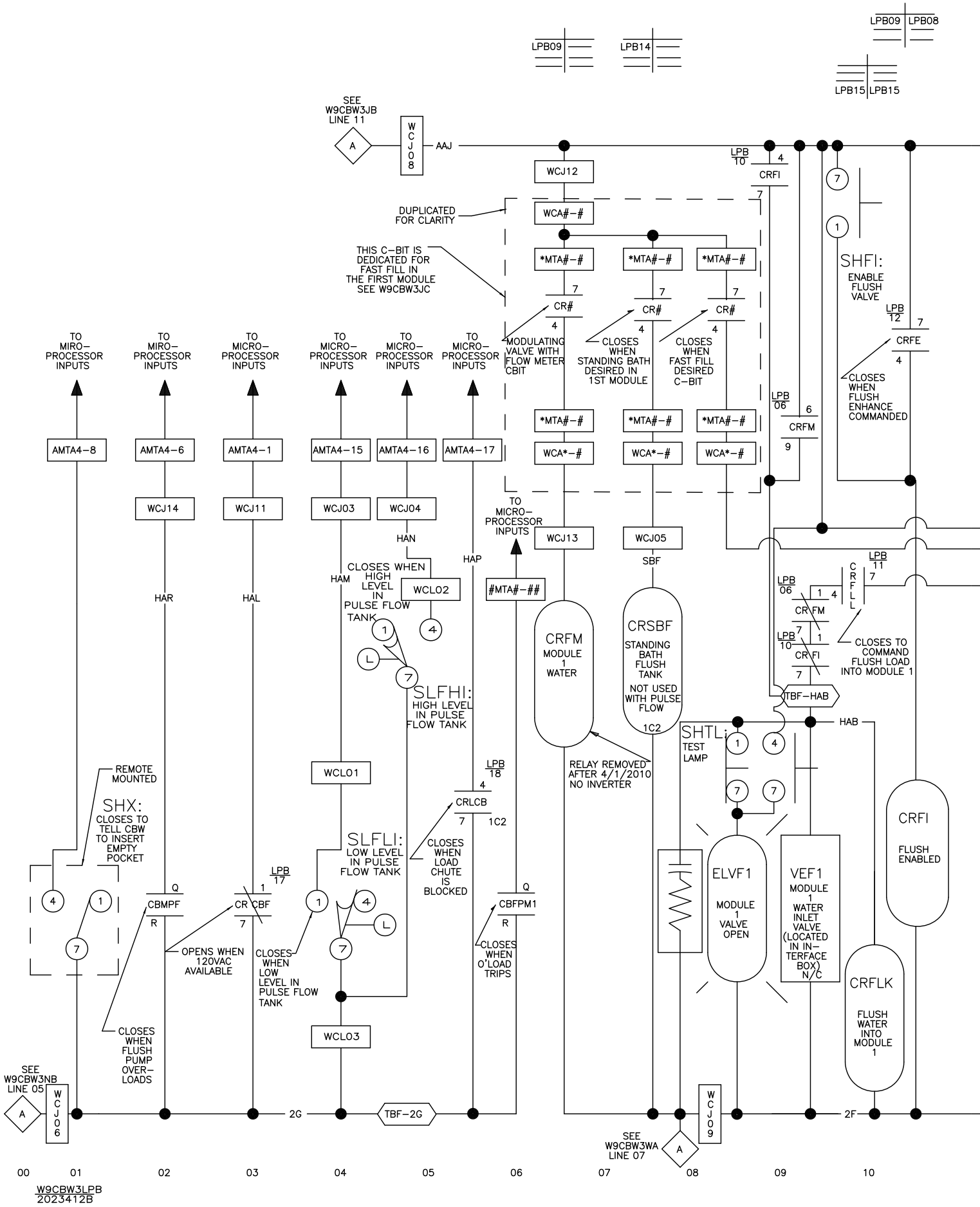
LPB09
LPB14
LPB09
LPB08
LPB15
LPB15
SEE W9CBW3JB LINE 11
A
WCJ08
AAJ
WCJ12
LPB 10
CRFI
DUPLICATED FOR CLARITY
WCA#-#
THIS C-BIT IS DEDICATED FOR FAST FILL IN THE FIRST MODULE SEE W9CBW3JC
*MTA#-#
CR#
MODULATING VALVE WITH FLOW METER CBIT
CLOSES WHEN STANDING BATH DESIRED IN 1ST MODULE
CLOSES WHEN FAST FILL DESIRED C-BIT
SHFI: ENABLE FLUSH VALVE
LPB 12
CRFE
CLOSES WHEN FLUSH ENHANCE COMMANDED
LPB 06
CRFM
WCA*-#
TO MIRO-PROCESSOR INPUTS
TO MICRO-PROCESSOR INPUTS
AMTA4-8
AMTA4-6
AMTA4-1
AMTA4-15
AMTA4-16
AMTA4-17
WCJ14
WCJ11
WCJ03
WCJ04
WCJ13
WCJ05
HAN
HAP
HAM
HAR
HAL
SBF
CLOSES WHEN HIGH LEVEL IN PULSE FLOW TANK
WCL02
#MTA#-##
CRFM MODULE 1 WATER
CRSBF STANDING BATH FLUSH TANK NOT USED WITH PULSE FLOW
1C2
LPB 11
CRFLL
CLOSES TO COMMAND FLUSH LOAD INTO MODULE 1
TBF-HAB
HAB
SHTL: TEST LAMP
SLFHI: HIGH LEVEL IN PULSE FLOW TANK
RELAY REMOVED AFTER 4/1/2010 NO INVERTER
REMOTE MOUNTED
SHX: CLOSES TO TELL CBW TO INSERT EMPTY POCKET
WCL01
LPB 18
CRLCB
SLFLI: LOW LEVEL IN PULSE FLOW TANK
CLOSES WHEN LOAD CHUTE IS BLOCKED
LPB 17
CBMPF
CR CBF
CBFPM1
OPENS WHEN 120VAC AVAILABLE
CLOSES WHEN LOW LEVEL IN PULSE FLOW TANK
CLOSES WHEN O'LOAD TRIPS
ELVF1 MODULE 1 VALVE OPEN
VEF1 MODULE 1 WATER INLET VALVE (LOCATED IN IN-TERFACE BOX) N/C
CRFI FLUSH ENABLED
CRFLK FLUSH WATER INTO MODULE 1
CLOSES WHEN FLUSH PUMP OVER-LOADS
WCL03
SEE W9CBW3NB LINE 05
WCJ06
2G
TBF-2G
2F
SEE W9CBW3WA LINE 07
WCJ09
00
01
02
03
04
05
06
07
08
09
10
W9CBW3LPB
2023412B

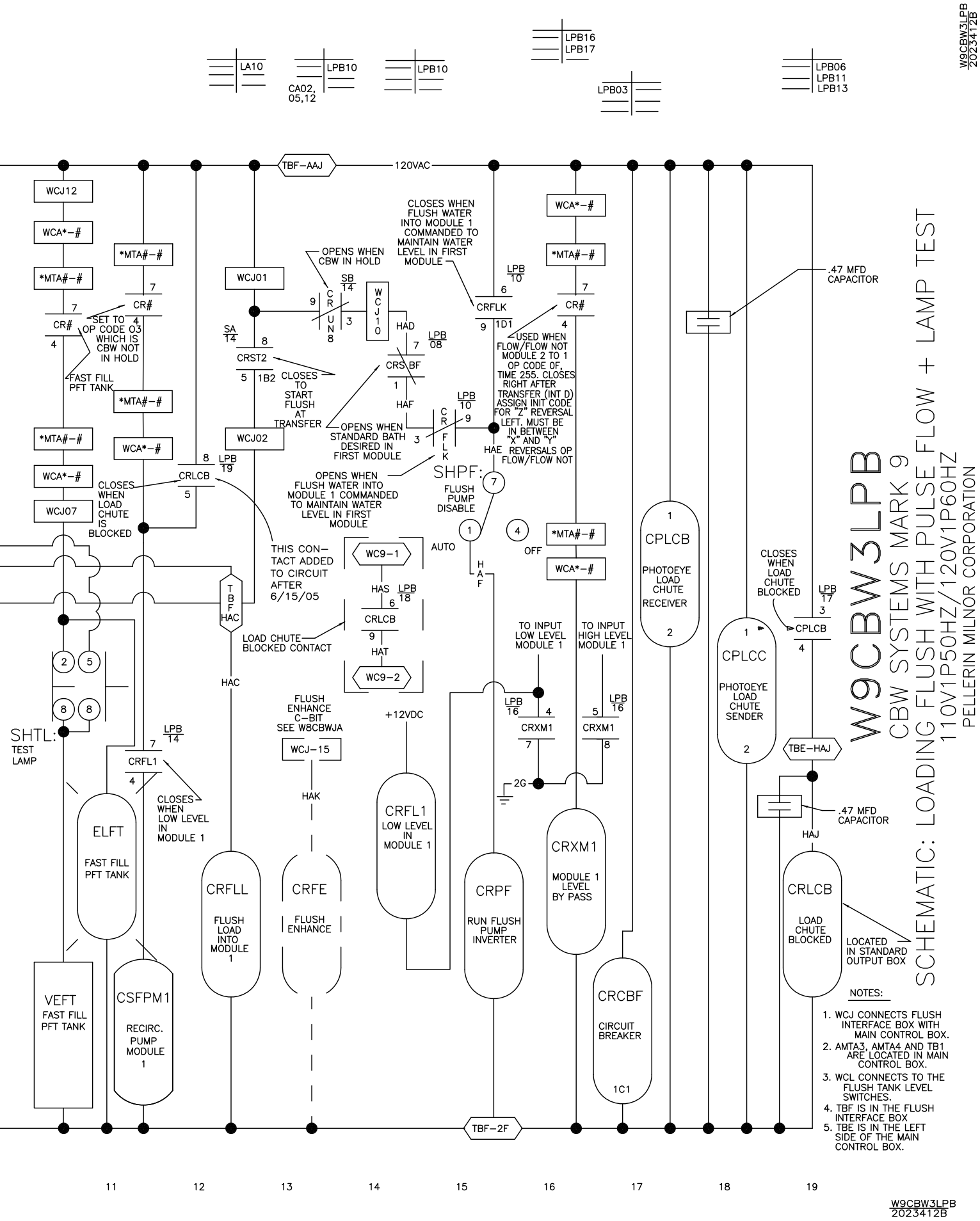
W9CBW3LPB
2023412B
LA10
LPB10
CA02, 05,12
LPB10
LPB16
LPB17
LPB03
LPB06
LPB11
LPB13
TBF-AAJ
120VAC
WCJ12
WCA*-#
*MTA#-#
CR#
SET TO OP CODE 03 WHICH IS CBW NOT IN HOLD
FAST FILL PFT TANK
WCJ01
OPENS WHEN CBW IN HOLD
SB 14
CR UN 8
WCJ10
HAD
SA 14
CRST2
CLOSES TO START FLUSH AT TRANSFER
CRS BF
HAF
LPB 08
LPB 10
CRFLK
OPENS WHEN STANDARD BATH DESIRED IN FIRST MODULE
WCJ02
CLOSES WHEN FLUSH WATER INTO MODULE 1 COMMANDED TO MAINTAIN WATER LEVEL IN FIRST MODULE
USED WHEN FLOW/FLOW NOT MODULE 2 TO 1 OP CODE 0F, TIME 255. CLOSES RIGHT AFTER TRANSFER (INT D) ASSIGN INIT CODE FOR "Z" REVERSAL LEFT. MUST BE IN BETWEEN "X" AND "Y" REVERSALS OP FLOW/FLOW NOT
HAE
SHPF:
FLUSH PUMP DISABLE
OPENS WHEN FLUSH WATER INTO MODULE 1 COMMANDED TO MAINTAIN WATER LEVEL IN FIRST MODULE
.47 MFD CAPACITOR
LPB 19
CRLCB
CLOSES WHEN LOAD CHUTE IS BLOCKED
WCJ07
THIS CON-TACT ADDED TO CIRCUIT AFTER 6/15/05
WC9-1
AUTO
OFF
HAF
HAS
LPB 18
CRLCB
HAT
WC9-2
LOAD CHUTE BLOCKED CONTACT
TBF HAC
HAC
TO INPUT LOW LEVEL MODULE 1
TO INPUT HIGH LEVEL MODULE 1
CPLCB
PHOTOEYE LOAD CHUTE RECEIVER
CPLCC
PHOTOEYE LOAD CHUTE SENDER
CLOSES WHEN LOAD CHUTE BLOCKED
LPB 17
CPLCB
TBE-HAJ
.47 MFD CAPACITOR
HAJ
SHTL:
TEST LAMP
LPB 14
CRFL1
CLOSES WHEN LOW LEVEL IN MODULE 1
FLUSH ENHANCE C-BIT SEE W8CBWJA
WCJ-15
HAK
+12VDC
LPB 16
CRXM1
2G
ELFT
FAST FILL PFT TANK
CRFLL
FLUSH LOAD INTO MODULE 1
CRFE
FLUSH ENHANCE
CRFL1
LOW LEVEL IN MODULE 1
CRPF
RUN FLUSH PUMP INVERTER
CRXM1
MODULE 1 LEVEL BY PASS
CRCBF
CIRCUIT BREAKER
CRLCB
LOAD CHUTE BLOCKED
LOCATED IN STANDARD OUTPUT BOX
VEFT
FAST FILL PFT TANK
CSFPM1
RECIRC. PUMP MODULE 1
TBF-2F
W9CBW3LPB
CBW SYSTEMS MARK 9
110V1P50HZ/120V1P60HZ
PELLERIN MILNOR CORPORATION
SCHEMATIC: LOADING FLUSH WITH PULSE FLOW + LAMP TEST
NOTES:
1. WCJ CONNECTS FLUSH INTERFACE BOX WITH MAIN CONTROL BOX.
2. AMTA3, AMTA4 AND TB1 ARE LOCATED IN MAIN CONTROL BOX.
3. WCL CONNECTS TO THE FLUSH TANK LEVEL SWITCHES.
4. TBF IS IN THE FLUSH INTERFACE BOX
5. TBE IS IN THE LEFT SIDE OF THE MAIN CONTROL BOX.
11
12
13
14
15
16
17
18
19
W9CBW3LPB
2023412B

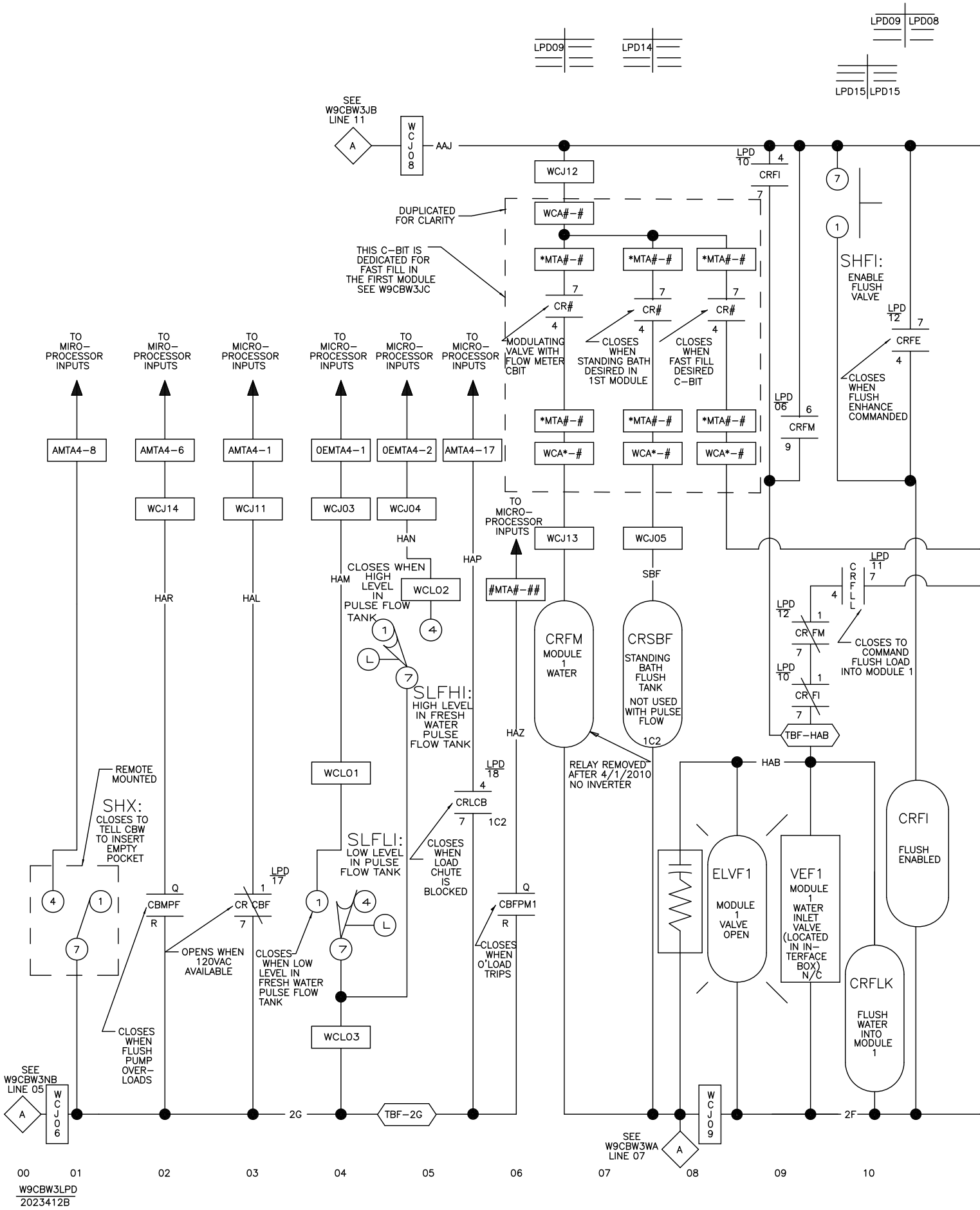
LPD09
LPD14
LPD09 LPD08
LPD15 LPD15
SEE W9CBW3JB LINE 11
A
WCJ08
AAJ
WCJ12
LPD 10
4
CRFI
7
DUPLICATED FOR CLARITY
WCA#-#
THIS C-BIT IS DEDICATED FOR FAST FILL IN THE FIRST MODULE SEE W9CBW3JC
*MTA#-#
CR#
MODULATING VALVE WITH FLOW METER CBIT
CLOSES WHEN STANDING BATH DESIRED IN 1ST MODULE
CLOSES WHEN FAST FILL DESIRED C-BIT
SHFI:
ENABLE FLUSH VALVE
LPD 12
CRFE
CLOSES WHEN FLUSH ENHANCE COMMANDED
LPD 06
6
CRFM
9
WCA*-#
TO MIRO-PROCESSOR INPUTS
TO MICRO-PROCESSOR INPUTS
AMTA4-8
AMTA4-6
AMTA4-1
OEMTA4-1
OEMTA4-2
AMTA4-17
WCJ14
WCJ11
WCJ03
WCJ04
WCJ13
WCJ05
HAN
HAP
HAM
HAR
HAL
SBF
CLOSES WHEN HIGH LEVEL IN PULSE FLOW TANK
WCLO2
#MTA#-##
LPD 11
CRFLL
LPD 12
CRFM
CLOSES TO COMMAND FLUSH LOAD INTO MODULE 1
LPD 10
CRFI
TBF-HAB
CRFM MODULE 1 WATER
CRSBF STANDING BATH FLUSH TANK NOT USED WITH PULSE FLOW 1C2
SLFHI: HIGH LEVEL IN FRESH WATER PULSE FLOW TANK
HAZ
HAB
RELAY REMOVED AFTER 4/1/2010 NO INVERTER
REMOTE MOUNTED
SHX: CLOSES TO TELL CBW TO INSERT EMPTY POCKET
WCLO1
LPD 18
CRLCB
1C2
SLFLI: LOW LEVEL IN PULSE FLOW TANK
CLOSES WHEN LOAD CHUTE IS BLOCKED
LPD 17
CBMPF
CRCBF
CBFPM1
OPENS WHEN 120VAC AVAILABLE
CLOSES WHEN LOW LEVEL IN FRESH WATER PULSE FLOW TANK
CLOSES WHEN O'LOAD TRIPS
ELVF1 MODULE 1 VALVE OPEN
VEF1 MODULE 1 WATER INLET VALVE (LOCATED IN IN-TERFACE BOX) N/C
CRFI FLUSH ENABLED
CRFLK FLUSH WATER INTO MODULE 1
CLOSES WHEN FLUSH PUMP OVER-LOADS
WCLO3
SEE W9CBW3NB LINE 05
WCJ06
2G
TBF-2G
2F
SEE W9CBW3WA LINE 07
WCJ09
00 01 02 03 04 05 06 07 08 09 10
W9CBW3LPD
2023412B

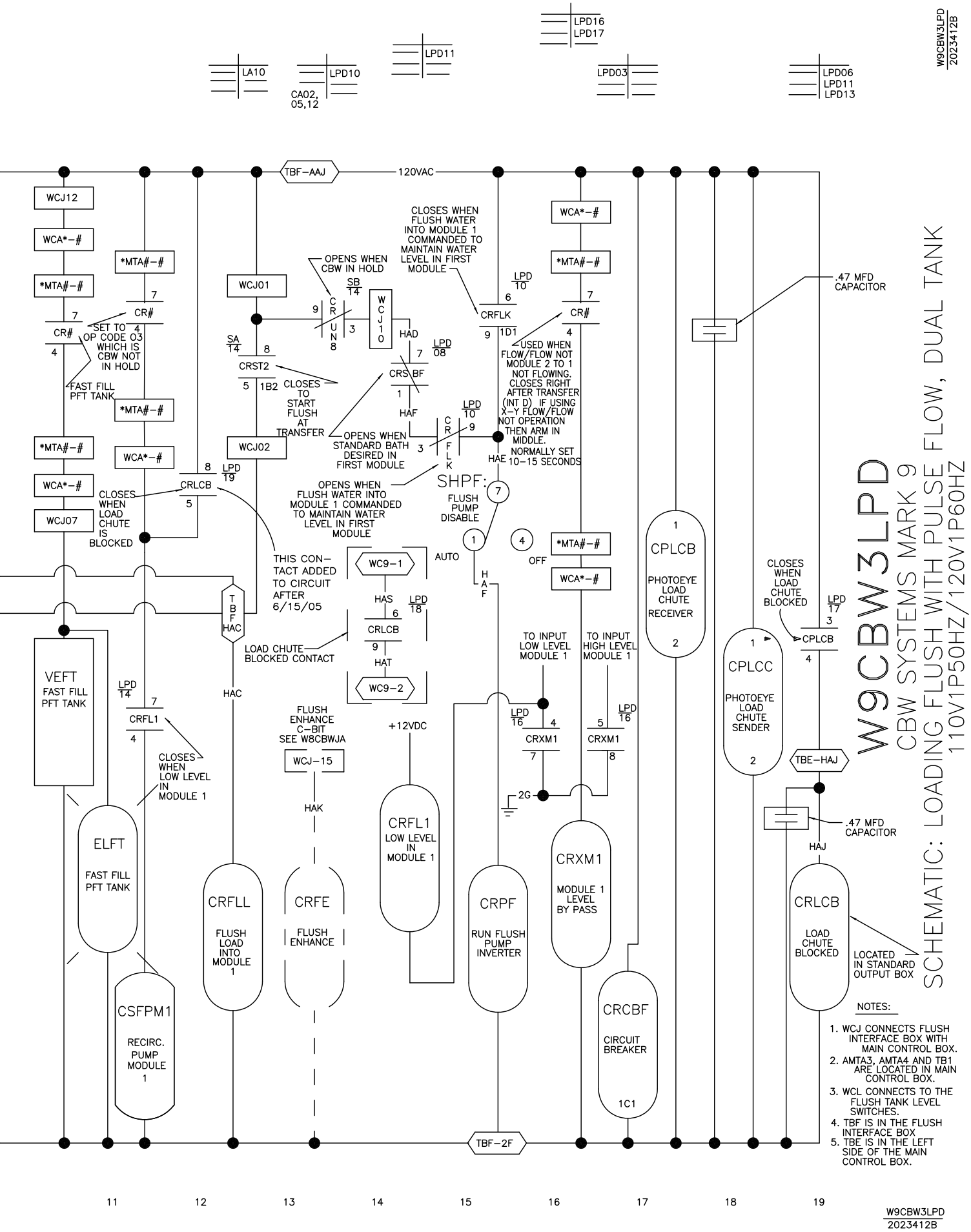
W9CBW3LPD
2023412B
LA10
LPD10
CA02, 05,12
LPD11
LPD16
LPD17
LPD03
LPD06
LPD11
LPD13
TBF-AAJ
120VAC
WCJ12
WCA*-#
*MTA#-#
CR#
SET TO OP CODE 03 WHICH IS CBW NOT IN HOLD
FAST FILL PFT TANK
WCJ07
CLOSES WHEN LOAD CHUTE IS BLOCKED
CRLCB
LPD 19
THIS CONTACT ADDED TO CIRCUIT AFTER 6/15/05
TBF HAC
VEFT
FAST FILL PFT TANK
LPD 14
CRFL1
CLOSES WHEN LOW LEVEL IN MODULE 1
ELFT
FAST FILL PFT TANK
CSFPM1
RECIRC. PUMP MODULE 1
HAC
CRFLL
FLUSH LOAD INTO MODULE 1
WCJ01
OPENS WHEN CBW IN HOLD
SB 14
CRUN 8
WCJ10
SA 14
CRST2
CLOSES TO START FLUSH AT TRANSFER
WCJ02
HAD
LPD 08
CRSBF
HAF
OPENS WHEN STANDARD BATH DESIRED IN FIRST MODULE
CRFLK
LPD 10
OPENS WHEN FLUSH WATER INTO MODULE 1 COMMANDED TO MAINTAIN WATER LEVEL IN FIRST MODULE
CLOSES WHEN FLUSH WATER INTO MODULE 1 COMMANDED TO MAINTAIN WATER LEVEL IN FIRST MODULE
CRFLK
USED WHEN FLOW/FLOW NOT MODULE 2 TO 1 NOT FLOWING. CLOSES RIGHT AFTER TRANSFER (INT D) IF USING X-Y FLOW/FLOW NOT OPERATION THEN ARM IN MIDDLE. NORMALLY SET 10-15 SECONDS
HAE
SHPF:
FLUSH PUMP DISABLE
AUTO
OFF
HAF
WC9-1
HAS
CRLCB
HAT
WC9-2
LOAD CHUTE BLOCKED CONTACT
FLUSH ENHANCE C-BIT SEE W8CBWJA
WCJ-15
HAK
CRFE
FLUSH ENHANCE
+12VDC
CRFL1
LOW LEVEL IN MODULE 1
CRPF
RUN FLUSH PUMP INVERTER
TBF-2F
TO INPUT LOW LEVEL MODULE 1
TO INPUT HIGH LEVEL MODULE 1
CRXM1
2G
CRXM1
MODULE 1 LEVEL BY PASS
CRCBF
CIRCUIT BREAKER
1C1
CPLCB
PHOTOEYE LOAD CHUTE RECEIVER
CPLCC
PHOTOEYE LOAD CHUTE SENDER
.47 MFD CAPACITOR
CLOSES WHEN LOAD CHUTE BLOCKED
LPD 17
CPLCB
TBE-HAJ
.47 MFD CAPACITOR
HAJ
CRLCB
LOAD CHUTE BLOCKED
LOCATED IN STANDARD OUTPUT BOX
W9CBW3LPD
CBW SYSTEMS MARK 9
110V1P50HZ/120V1P60HZ
PELLERIN MILNOR CORPORATION
SCHEMATIC: LOADING FLUSH WITH PULSE FLOW, DUAL TANK
NOTES:
1. WCJ CONNECTS FLUSH INTERFACE BOX WITH MAIN CONTROL BOX.
2. AMTA3, AMTA4 AND TB1 ARE LOCATED IN MAIN CONTROL BOX.
3. WCL CONNECTS TO THE FLUSH TANK LEVEL SWITCHES.
4. TBF IS IN THE FLUSH INTERFACE BOX
5. TBE IS IN THE LEFT SIDE OF THE MAIN CONTROL BOX.
11
12
13
14
15
16
17
18
19
W9CBW3LPD
2023412B

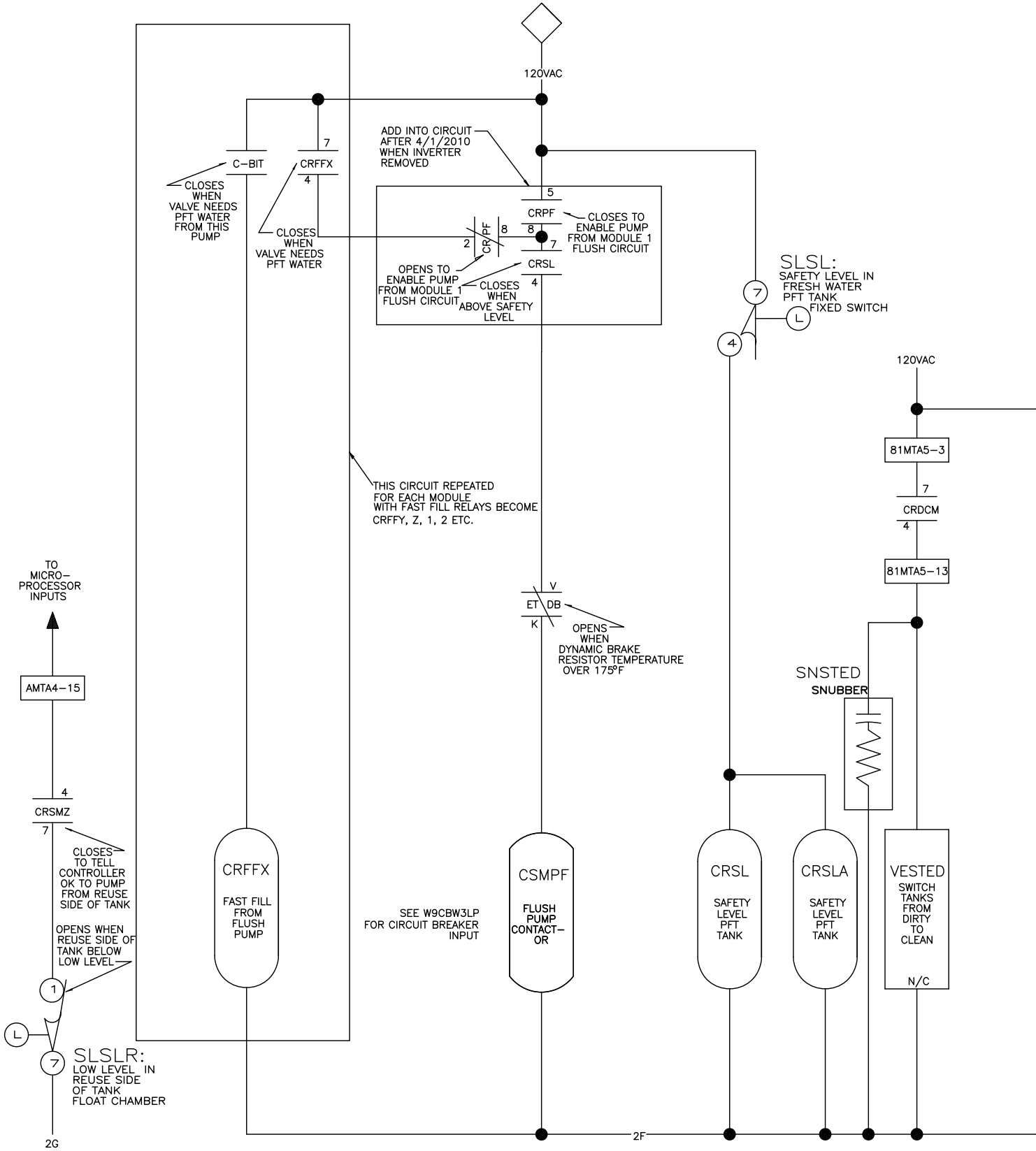
120VAC
ADD INTO CIRCUIT AFTER 4/1/2010 WHEN INVERTER REMOVED
C–BIT
CRFFX
7
4
CLOSES WHEN VALVE NEEDS PFT WATER FROM THIS PUMP
CLOSES WHEN VALVE NEEDS PFT WATER
5
CRPF
CLOSES TO ENABLE PUMP FROM MODULE 1 FLUSH CIRCUIT
CR/PF
2
8
8
7
CRSL
4
OPENS TO ENABLE PUMP FROM MODULE 1 FLUSH CIRCUIT
CLOSES WHEN ABOVE SAFETY LEVEL
SLSL:
SAFETY LEVEL IN FRESH WATER PFT TANK FIXED SWITCH
7
L
4
120VAC
81MTA5–3
7
CRDCM
4
81MTA5–13
THIS CIRCUIT REPEATED FOR EACH MODULE WITH FAST FILL RELAYS BECOME CRFFY, Z, 1, 2 ETC.
TO MICRO–PROCESSOR INPUTS
V
ET DB
K
OPENS WHEN DYNAMIC BRAKE RESISTOR TEMPERATURE OVER 175°F
SNSTED
SNUBBER
AMTA4–15
4
CRSMZ
7
CLOSES TO TELL CONTROLLER OK TO PUMP FROM REUSE SIDE OF TANK
OPENS WHEN REUSE SIDE OF TANK BELOW LOW LEVEL
1
L
7
SLSLR:
LOW LEVEL IN REUSE SIDE OF TANK FLOAT CHAMBER
2G
CRFFX
FAST FILL FROM FLUSH PUMP
SEE W9CBW3LP FOR CIRCUIT BREAKER INPUT
CSMPF
FLUSH PUMP CONTACT–OR
CRSL
SAFETY LEVEL PFT TANK
CRSLA
SAFETY LEVEL PFT TANK
VESTED
SWITCH TANKS FROM DIRTY TO CLEAN
N/C
2F
00
01
02
03
04
05
06
07
08
09
10
W9CBW3LP1D
2018305B

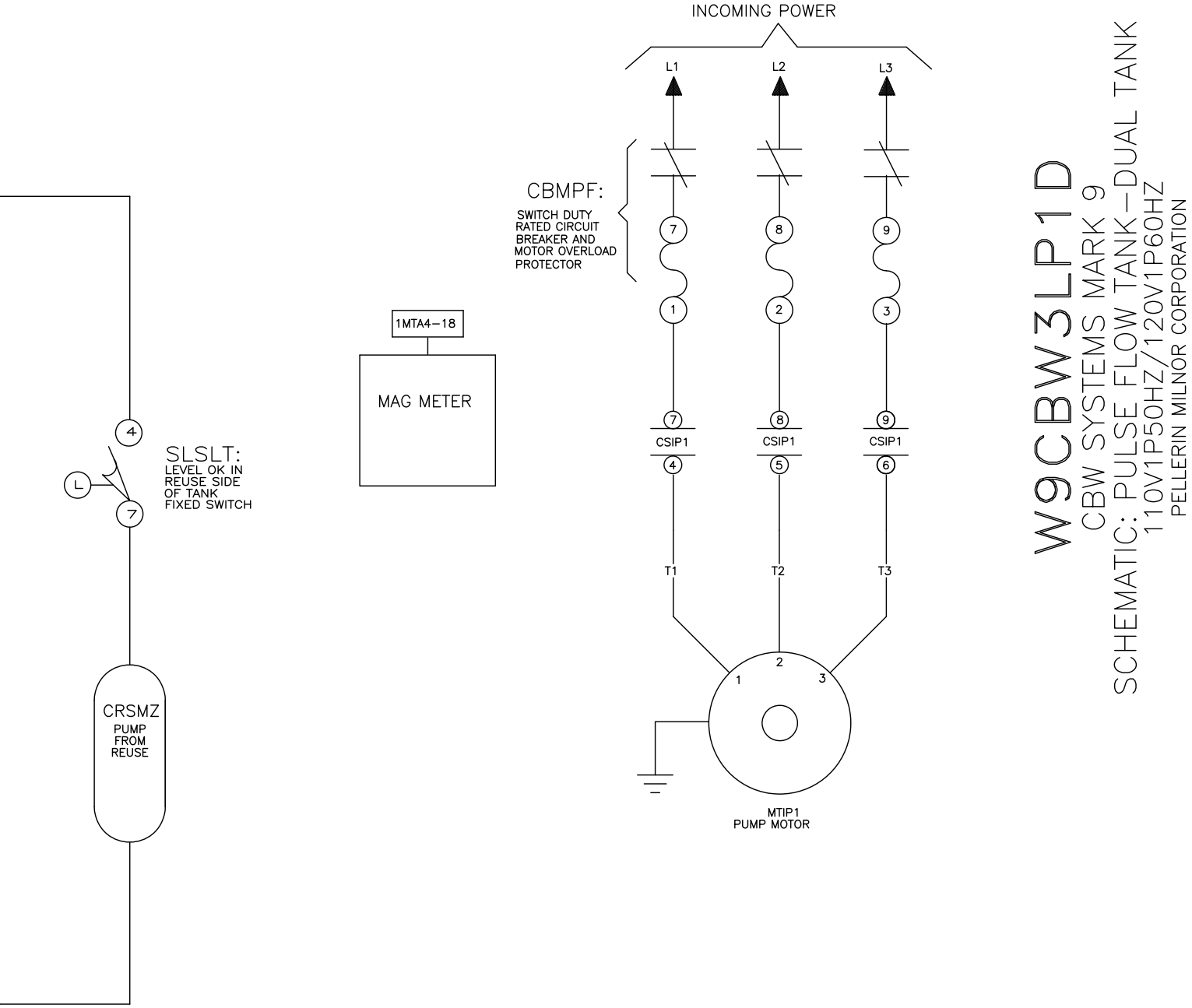
INCOMING POWER
L1
L2
L3
CBMPF:
SWITCH DUTY RATED CIRCUIT BREAKER AND MOTOR OVERLOAD PROTECTOR
7
8
9
1
2
3
1MTA4–18
MAG METER
CSIP1
CSIP1
CSIP1
4
5
6
T1
T2
T3
1
2
3
MTIP1
PUMP MOTOR
4
L
7
SLSLT:
LEVEL OK IN REUSE SIDE OF TANK FIXED SWITCH
CRSMZ
PUMP FROM REUSE
W9CBW3LP1D
CBW SYSTEMS MARK 9
SCHEMATIC: PULSE FLOW TANK–DUAL TANK
110V1P50HZ/120V1P60HZ
PELLERIN MILNOR CORPORATION
11
12
13
14
15
16
17
18
19

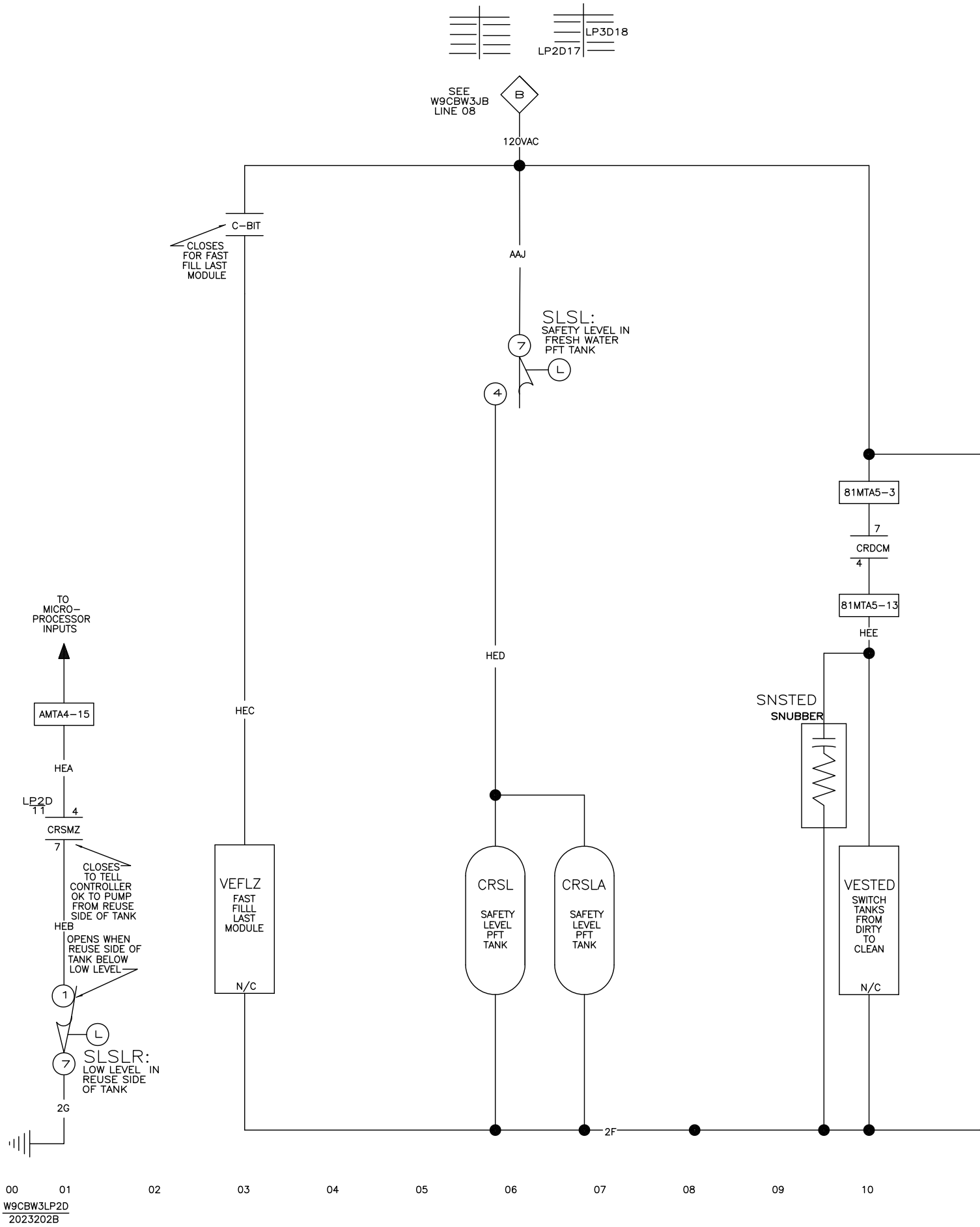
LP3D18
LP2D17
SEE
W9CBW3JB
LINE 08
B
120VAC
C–BIT
CLOSES
FOR FAST
FILL LAST
MODULE
AAJ
SLSL:
SAFETY LEVEL IN
FRESH WATER
PFT TANK
7
L
4
81MTA5–3
7
CRDCM
4
81MTA5–13
HEE
TO
MICRO–
PROCESSOR
INPUTS
HED
SNSTED
SNUBBER
AMTA4–15
HEC
HEA
LP2D
11
4
CRSMZ
7
CLOSES
TO TELL
CONTROLLER
OK TO PUMP
FROM REUSE
SIDE OF TANK
HEB
OPENS WHEN
REUSE SIDE OF
TANK BELOW
LOW LEVEL
1
L
7
SLSLR:
LOW LEVEL IN
REUSE SIDE
OF TANK
2G
VEFLZ
FAST
FILLL
LAST
MODULE
N/C
CRSL
SAFETY
LEVEL
PFT
TANK
CRSLA
SAFETY
LEVEL
PFT
TANK
VESTED
SWITCH
TANKS
FROM
DIRTY
TO
CLEAN
N/C
2F
00
01
02
03
04
05
06
07
08
09
10
W9CBW3LP2D
2023202B

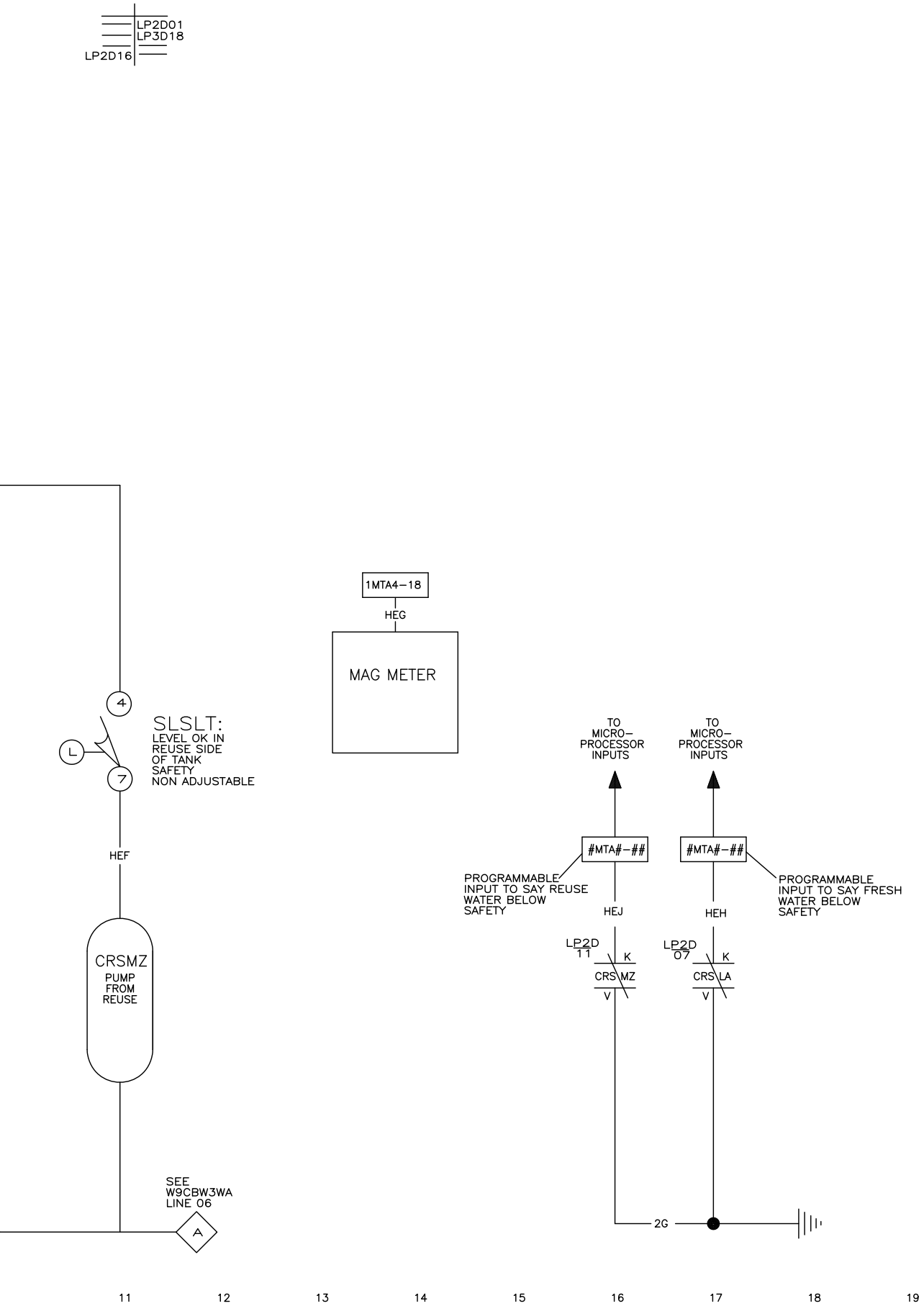

W9CBW3LP2D

CBW SYSTEMS MARK 9

SCHEMATIC: PULSE FLOW TANK–DUAL TANK–2 PUMPS

110V1P50HZ/120V1P60HZ

PELLERIN MILNOR CORPORATION

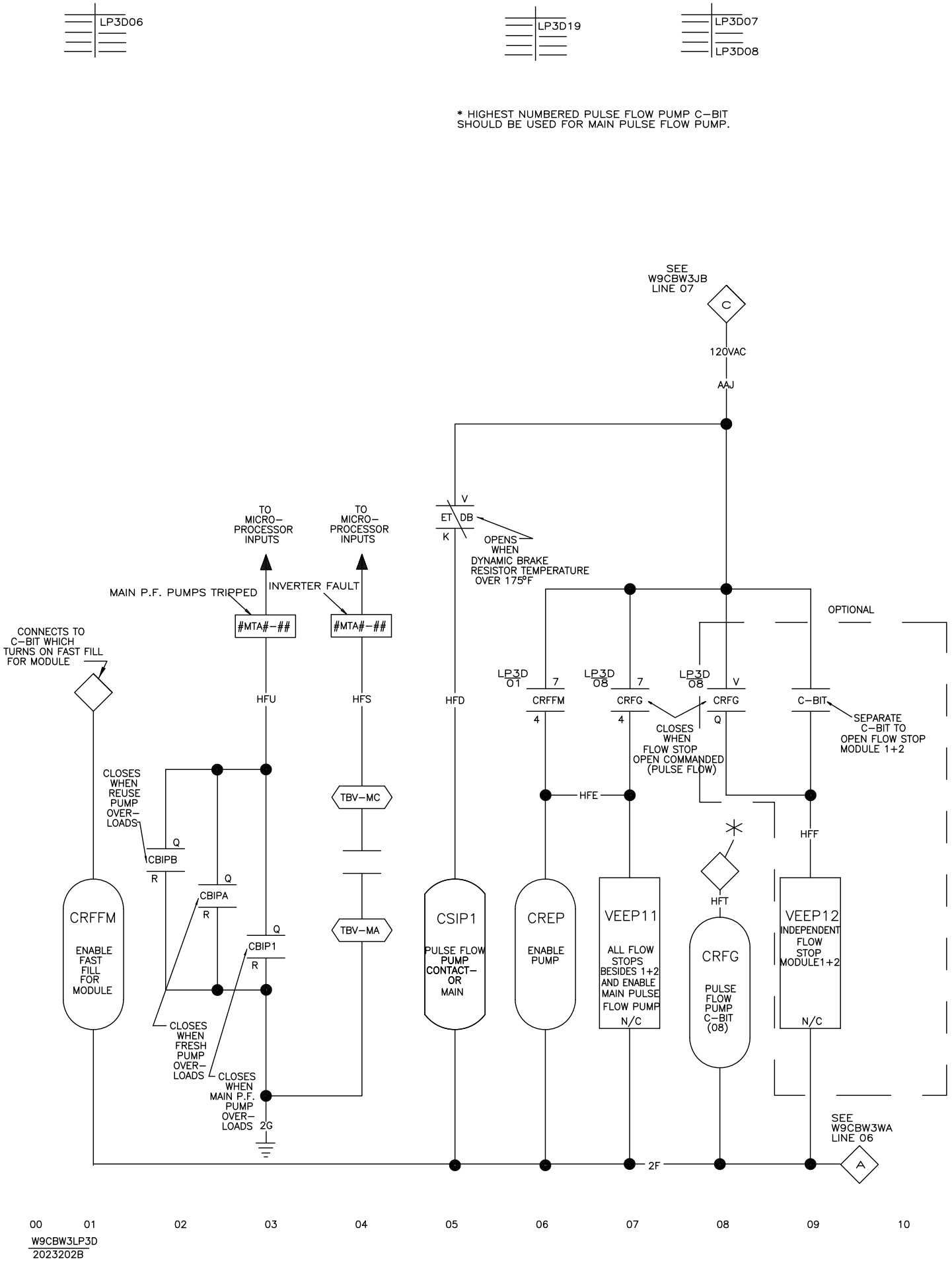
LP3D06
LP3D19
LP3D07
LP3D08
* HIGHEST NUMBERED PULSE FLOW PUMP C–BIT SHOULD BE USED FOR MAIN PULSE FLOW PUMP.
SEE W9CBW3JB LINE 07
C
120VAC
AAJ
TO MICRO–PROCESSOR INPUTS
TO MICRO–PROCESSOR INPUTS
V
ET DB
K
OPENS WHEN DYNAMIC BRAKE RESISTOR TEMPERATURE OVER 175°F
MAIN P.F. PUMPS TRIPPED
INVERTER FAULT
#MTA#–##
#MTA#–##
OPTIONAL
CONNECTS TO C–BIT WHICH TURNS ON FAST FILL FOR MODULE
LP3D 01
7
CRFFM
4
LP3D 08
7
CRFG
4
LP3D 08
V
CRFG
Q
C–BIT
SEPARATE C–BIT TO OPEN FLOW STOP MODULE 1+2
HFU
HFS
HFD
CLOSES WHEN FLOW STOP OPEN COMMANDED (PULSE FLOW)
CLOSES WHEN REUSE PUMP OVER–LOADS
TBV–MC
HFE
HFF
Q
CBIPB
R
Q
CBIPA
R
Q
CBIP1
R
TBV–MA
HFT
CRFFM
ENABLE FAST FILL FOR MODULE
CSIP1
PULSE FLOW PUMP CONTACT– OR MAIN
CREP
ENABLE PUMP
VEEP11
ALL FLOW STOPS BESIDES 1+2 AND ENABLE MAIN PULSE FLOW PUMP
N/C
CRFG
PULSE FLOW PUMP C–BIT (08)
VEEP12
INDEPENDENT FLOW STOP MODULE1+2
N/C
CLOSES WHEN FRESH PUMP OVER–LOADS
CLOSES WHEN MAIN P.F. PUMP OVER–LOADS
2G
2F
SEE W9CBW3WA LINE 06
A
00
01
02
03
04
05
06
07
08
09
10
W9CBW3LP3D
2023202B

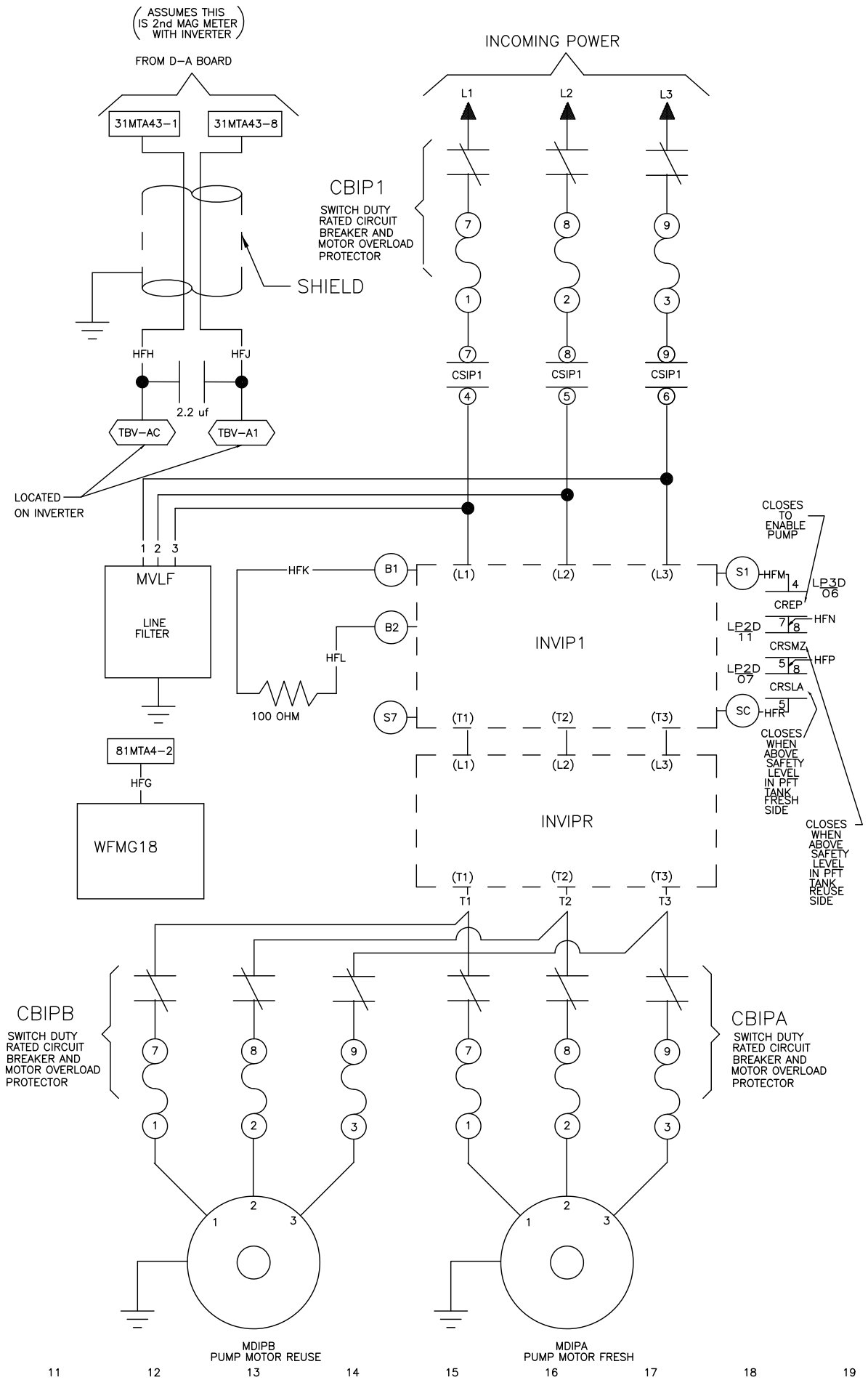

W9CBW3LP3D
CBW SYSTEMS MARK 9
SCHEMATIC: PULSE FLOW TANK DUAL TANK 2 PUMPS
110V1P50HZ/120V1P60HZ
PELLERIN MILNOR CORPORATION

W9CBW3LP3D
2023202B

W9CBW3LP3D
2023202B

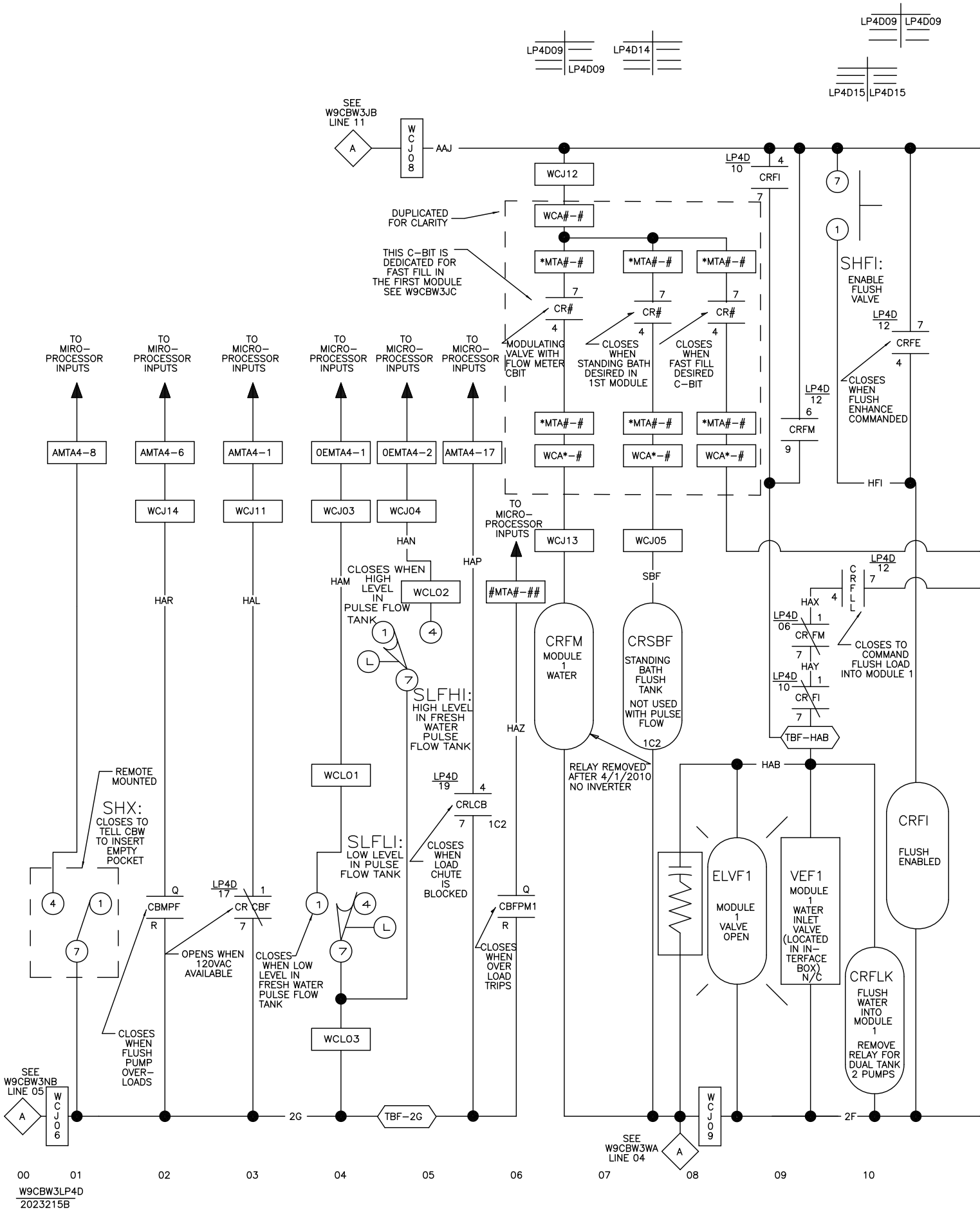
LP4D09 LP4D09
LP4D09 LP4D09
LP4D14
LP4D15 LP4D15
SEE W9CBW3JB LINE 11
A
WCJ08
AAJ
WCJ12
LP4D 10
4
CRFI
7
DUPLICATED FOR CLARITY
WCA#-#
THIS C-BIT IS DEDICATED FOR FAST FILL IN THE FIRST MODULE SEE W9CBW3JC
*MTA#-#
CR#
MODULATING VALVE WITH FLOW METER CBIT
CLOSES WHEN STANDING BATH DESIRED IN 1ST MODULE
CLOSES WHEN FAST FILL DESIRED C-BIT
SHFI:
ENABLE FLUSH VALVE
LP4D 12
CRFE
CLOSES WHEN FLUSH ENHANCE COMMANDED
LP4D 12
6
CRFM
9
WCA*-#
HFI
TO MIRO-PROCESSOR INPUTS
TO MICRO-PROCESSOR INPUTS
AMTA4-8
AMTA4-6
AMTA4-1
0EMTA4-1
0EMTA4-2
AMTA4-17
WCJ14
WCJ11
WCJ03
WCJ04
WCJ13
WCJ05
HAN
HAP
HAM
HAR
HAL
SBF
CLOSES WHEN HIGH LEVEL IN PULSE FLOW TANK
WCLO2
#MTA#-##
SLFHI:
HIGH LEVEL IN FRESH WATER PULSE FLOW TANK
CRFM
MODULE 1 WATER
CRSBF
STANDING BATH FLUSH TANK
NOT USED WITH PULSE FLOW
1C2
CRFLL
HAX
LP4D 06
CRFM
HAY
LP4D 10
CRFI
TBF-HAB
CLOSES TO COMMAND FLUSH LOAD INTO MODULE 1
HAZ
HAB
RELAY REMOVED AFTER 4/1/2010 NO INVERTER
WCLO1
LP4D 19
CRLCB
1C2
SLFLI:
LOW LEVEL IN PULSE FLOW TANK
CLOSES WHEN LOAD CHUTE IS BLOCKED
REMOTE MOUNTED
SHX:
CLOSES TO TELL CBW TO INSERT EMPTY POCKET
LP4D 17
CRCBF
CBMPF
OPENS WHEN 120VAC AVAILABLE
CLOSES WHEN LOW LEVEL IN FRESH WATER PULSE FLOW TANK
CBFPM1
CLOSES WHEN OVER LOAD TRIPS
ELVF1
MODULE 1 VALVE OPEN
VEF1
MODULE 1 WATER INLET VALVE (LOCATED IN IN-TERFACE BOX) N/C
CRFI
FLUSH ENABLED
CRFLK
FLUSH WATER INTO MODULE 1
REMOVE RELAY FOR DUAL TANK 2 PUMPS
CLOSES WHEN FLUSH PUMP OVER-LOADS
WCLO3
SEE W9CBW3NB LINE 05
WCJ06
2G
TBF-2G
SEE W9CBW3WA LINE 04
WCJ09
2F
00 01 02 03 04 05 06 07 08 09 10
W9CBW3LP4D
2023215B

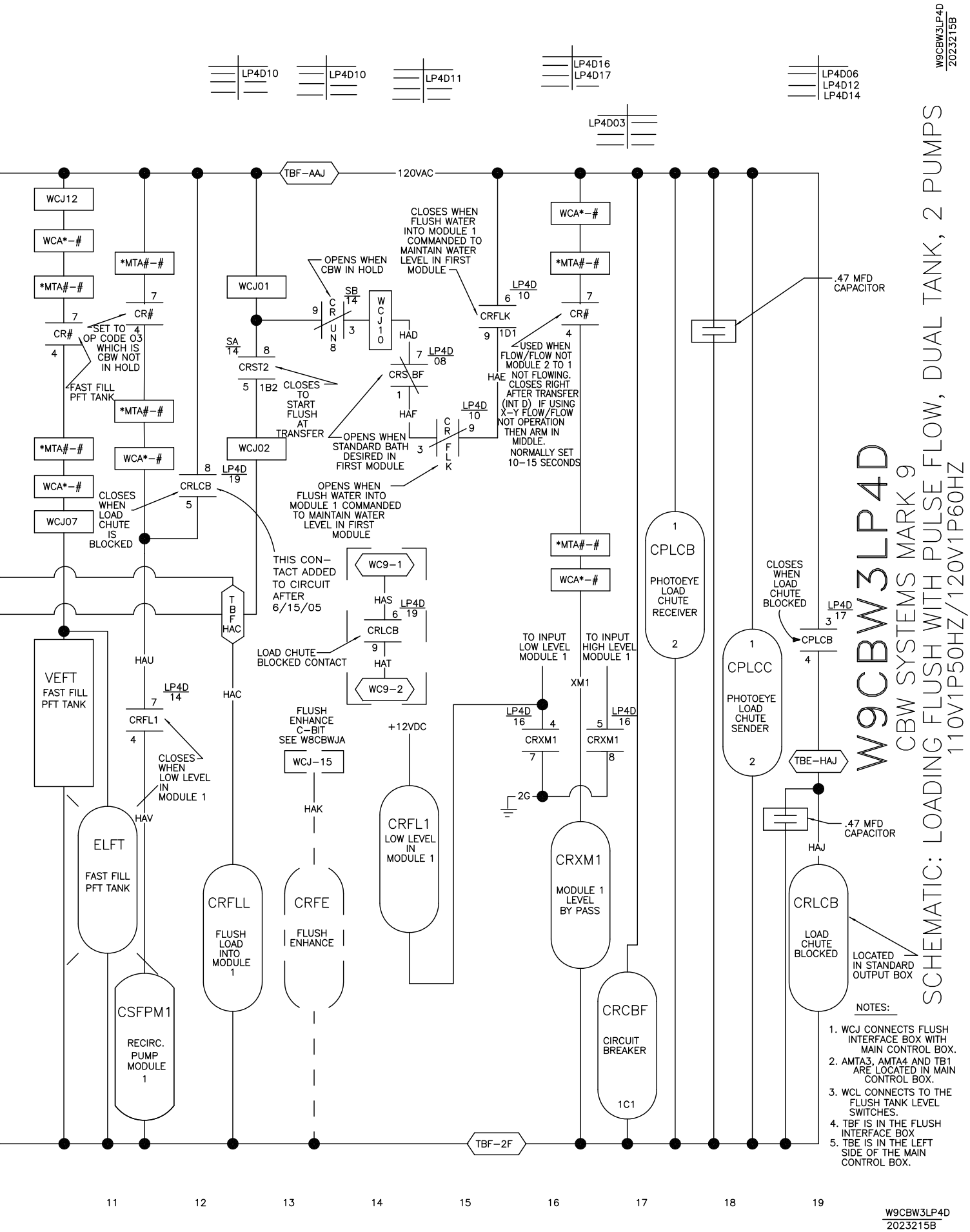

W9CBW3LP4D

CBW SYSTEMS MARK 9

110V1P50HZ/120V1P60HZ

PELLERIN MILNOR CORPORATION

SCHEMATIC: LOADING FLUSH WITH PULSE FLOW, DUAL TANK, 2 PUMPS

NOTES:

1. WCJ CONNECTS FLUSH INTERFACE BOX WITH MAIN CONTROL BOX.
2. AMTA3, AMTA4 AND TB1 ARE LOCATED IN MAIN CONTROL BOX.
3. WCL CONNECTS TO THE FLUSH TANK LEVEL SWITCHES.
4. TBF IS IN THE FLUSH INTERFACE BOX
5. TBE IS IN THE LEFT SIDE OF THE MAIN CONTROL BOX.

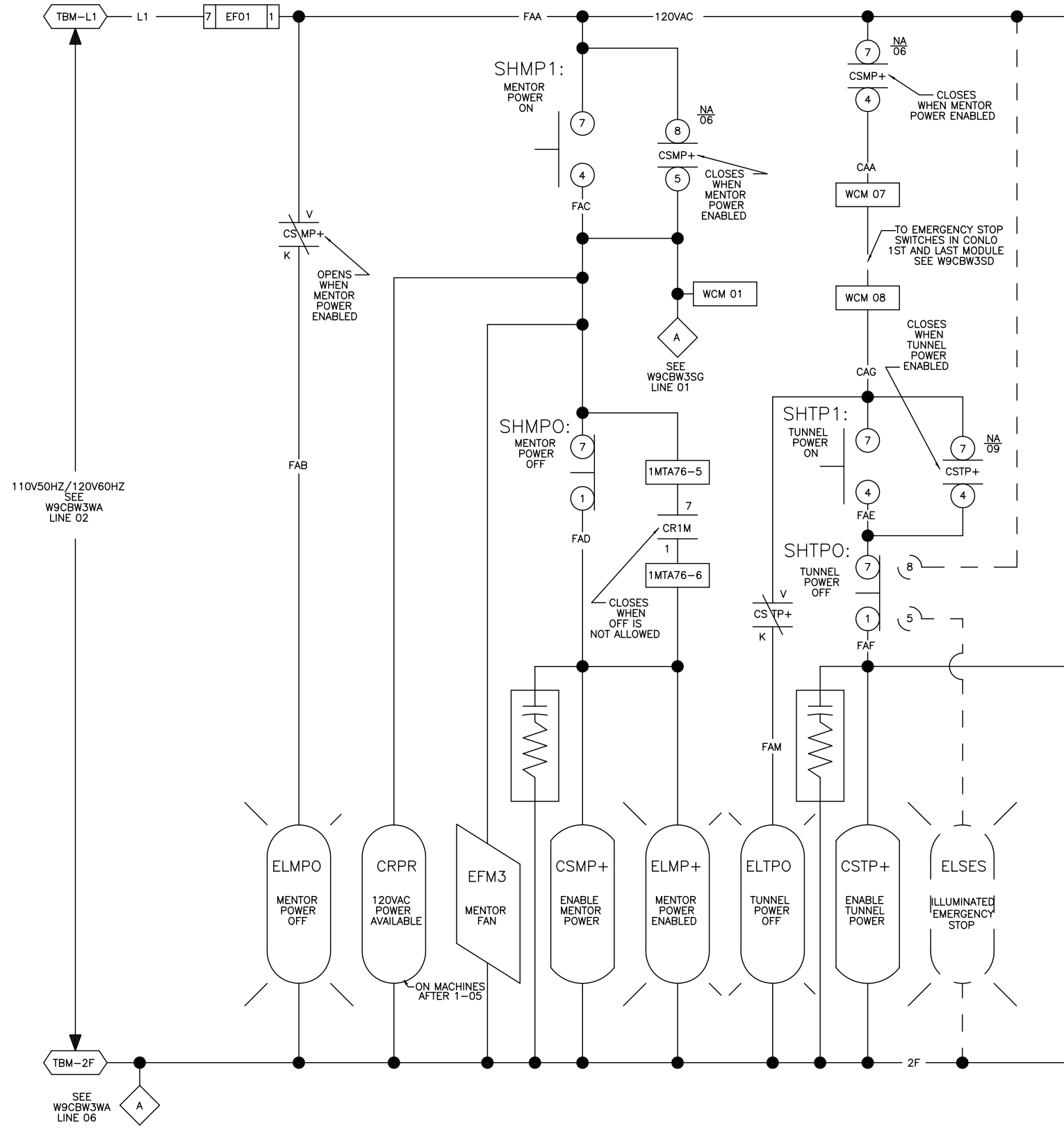
TBM–L1
L1
7
EF01
1
FAA
120VAC
SHMP1:
MENTOR POWER ON
7
4
FAC
8
NA 06
CSMP+
5
CLOSES WHEN MENTOR POWER ENABLED
7
NA 06
CSMP+
4
CLOSES WHEN MENTOR POWER ENABLED
CAA
WCM 07
TO EMERGENCY STOP SWITCHES IN CONLO 1ST AND LAST MODULE SEE W9CBW3SD
WCM 08
CLOSES WHEN TUNNEL POWER ENABLED
CAG
V
CSMP+
K
OPENS WHEN MENTOR POWER ENABLED
WCM 01
A
SEE W9CBW3SG LINE 01
SHMPO:
MENTOR POWER OFF
7
1
FAD
1MTA76–5
7
CR1M
1
1MTA76–6
CLOSES WHEN OFF IS NOT ALLOWED
SHTP1:
TUNNEL POWER ON
7
4
FAE
7
NA 09
CSTP+
4
SHTPO:
TUNNEL POWER OFF
7
8
1
5
FAF
V
CSTP+
K
FAM
FAB
110V50HZ/120V60HZ SEE W9CBW3WA LINE 02
ELMPO
MENTOR POWER OFF
CRPR
120VAC POWER AVAILABLE
ON MACHINES AFTER 1–05
EFM3
MENTOR FAN
CSMP+
ENABLE MENTOR POWER
ELMP+
MENTOR POWER ENABLED
ELTPO
TUNNEL POWER OFF
CSTP+
ENABLE TUNNEL POWER
ELSES
ILLUMINATED EMERGENCY STOP
TBM–2F
2F
SEE W9CBW3WA LINE 06
A
00
01
02
03
04
05
06
07
08
09
10
W9CBW3NA
2018406B

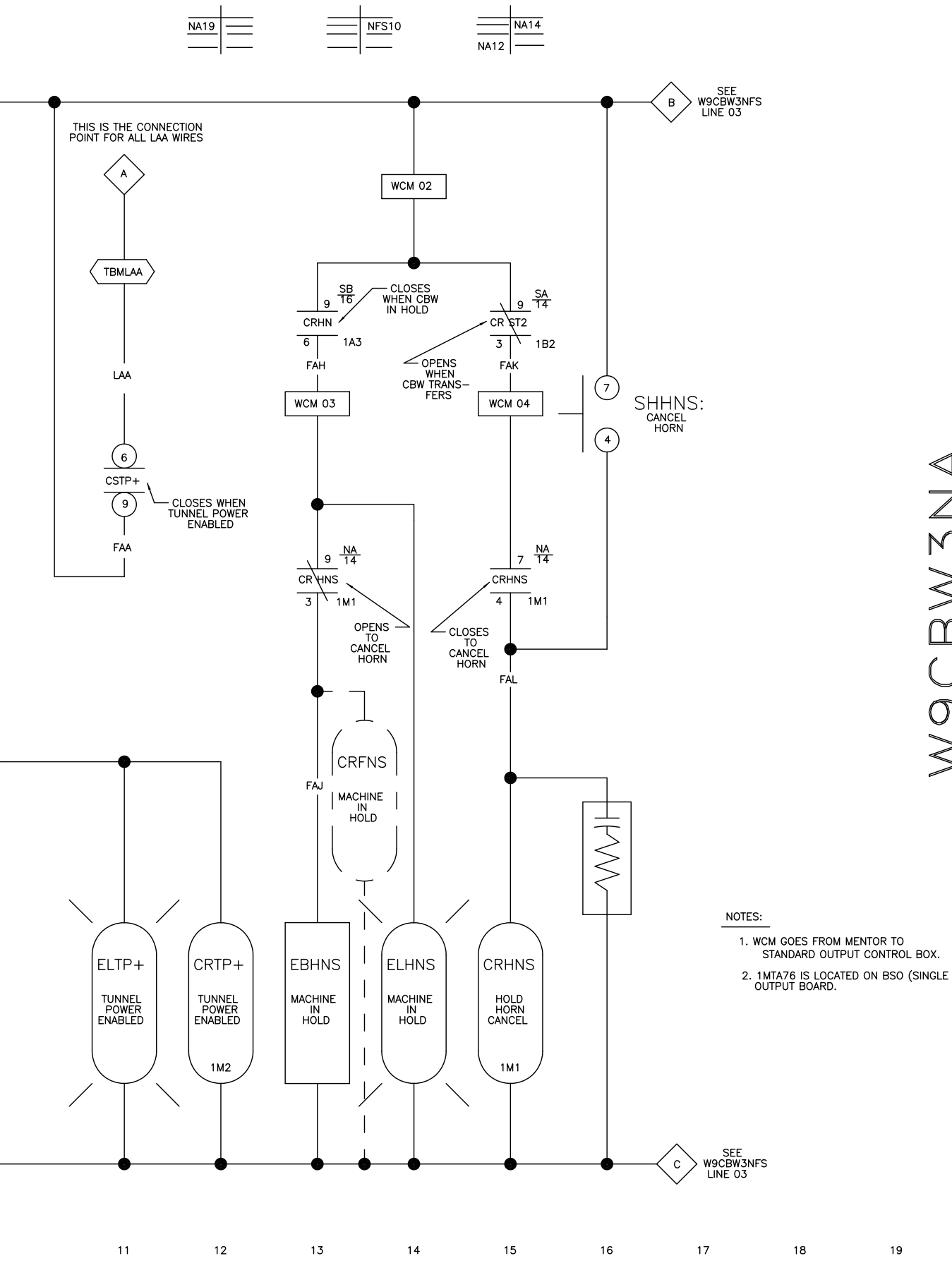

NOTES:

1. WCM GOES FROM MENTOR TO STANDARD OUTPUT CONTROL BOX.
2. 1MTA76 IS LOCATED ON BSO (SINGLE OUTPUT BOARD.

W9CBW3NA

G3 CBW SYSTEMS: MARK 9

SCHEMATIC: MENTOR CONTROL

PELLERIN MILNOR CORPORATION

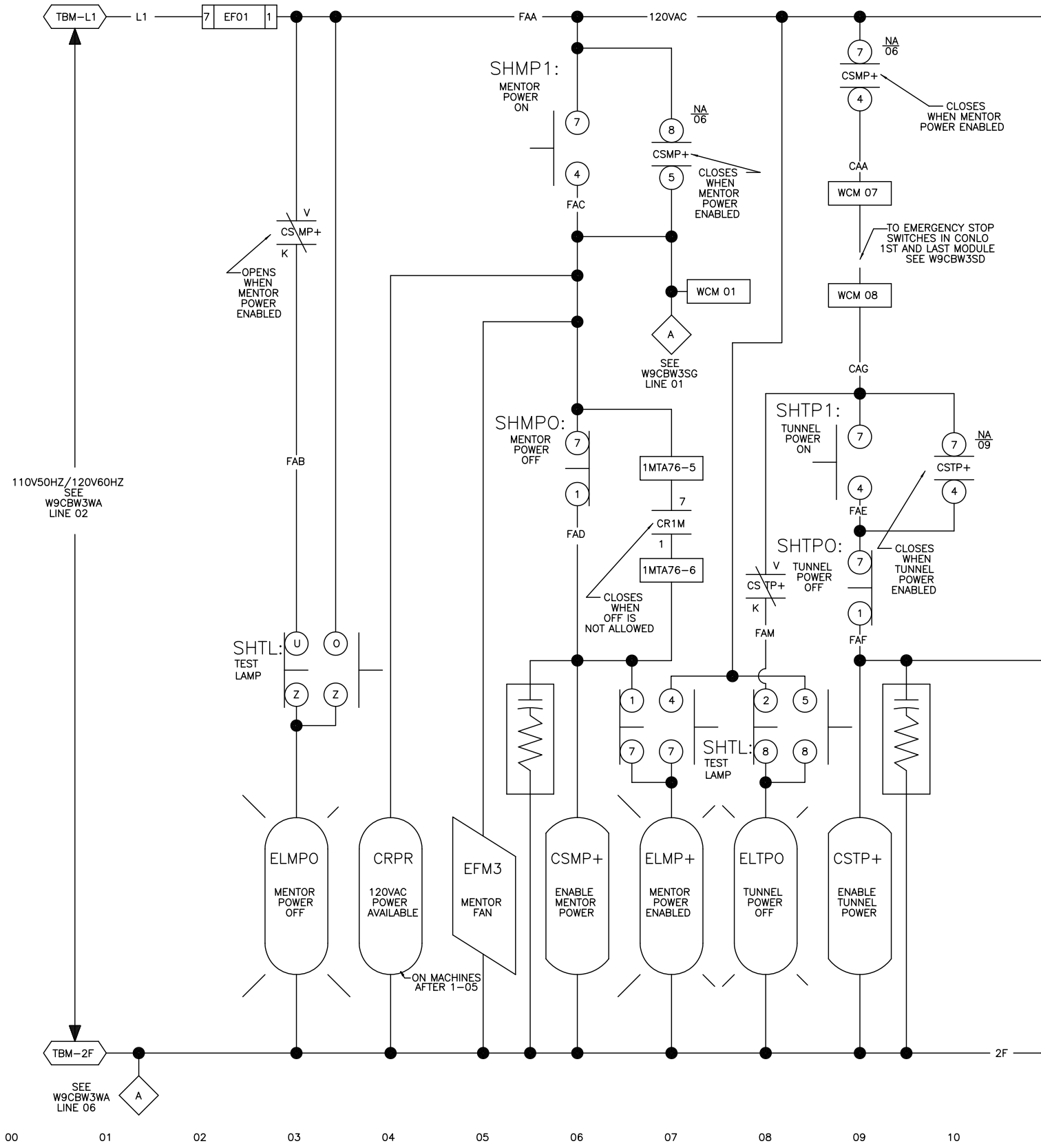
TBM–L1
L1
7 EF01 1
FAA
120VAC
SHMP1:
MENTOR POWER ON
7
4
FAC
8
NA 06
CSMP+
5
CLOSES WHEN MENTOR POWER ENABLED
7
NA 06
CSMP+
4
CLOSES WHEN MENTOR POWER ENABLED
CAA
WCM 07
TO EMERGENCY STOP SWITCHES IN CONLO 1ST AND LAST MODULE SEE W9CBW3SD
WCM 08
V
CSMP+
K
OPENS WHEN MENTOR POWER ENABLED
WCM 01
A
SEE W9CBW3SG LINE 01
CAG
SHMPO:
MENTOR POWER OFF
7
1
FAD
1MTA76–5
7
CR1M
1
1MTA76–6
CLOSES WHEN OFF IS NOT ALLOWED
SHTP1:
TUNNEL POWER ON
7
4
FAE
7
NA 09
CSTP+
4
SHTPO:
TUNNEL POWER OFF
7
1
FAF
CLOSES WHEN TUNNEL POWER ENABLED
V
CSTP+
K
FAM
FAB
110V50HZ/120V60HZ SEE W9CBW3WA LINE 02
SHTL:
TEST LAMP
U
O
Z
Z
1
4
7
7
SHTL:
TEST LAMP
2
5
8
8
ELMPO
MENTOR POWER OFF
CRPR
120VAC POWER AVAILABLE
ON MACHINES AFTER 1–05
EFM3
MENTOR FAN
CSMP+
ENABLE MENTOR POWER
ELMP+
MENTOR POWER ENABLED
ELTPO
TUNNEL POWER OFF
CSTP+
ENABLE TUNNEL POWER
TBM–2F
2F
SEE W9CBW3WA LINE 06
A
00
01
02
03
04
05
06
07
08
09
10
W9CBW3NAA
2019245B

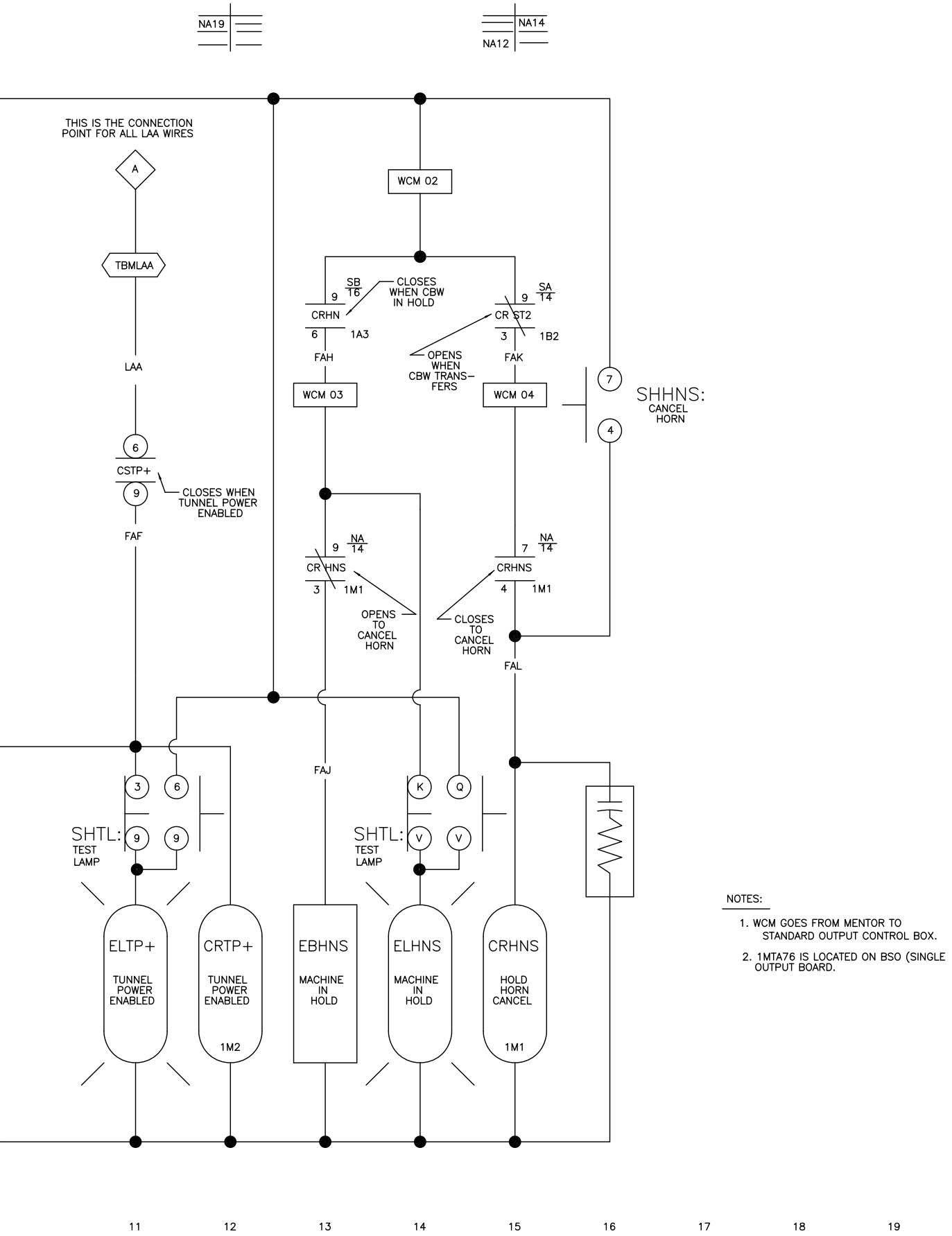

NOTES:

1. WCM GOES FROM MENTOR TO STANDARD OUTPUT CONTROL BOX.
2. 1MTA76 IS LOCATED ON BSO (SINGLE OUTPUT BOARD.

W9CBW3NAA

SCHEMATIC: MENTOR CONTROL W/ LAMP TEST

PELLERIN MILNOR CORPORATION

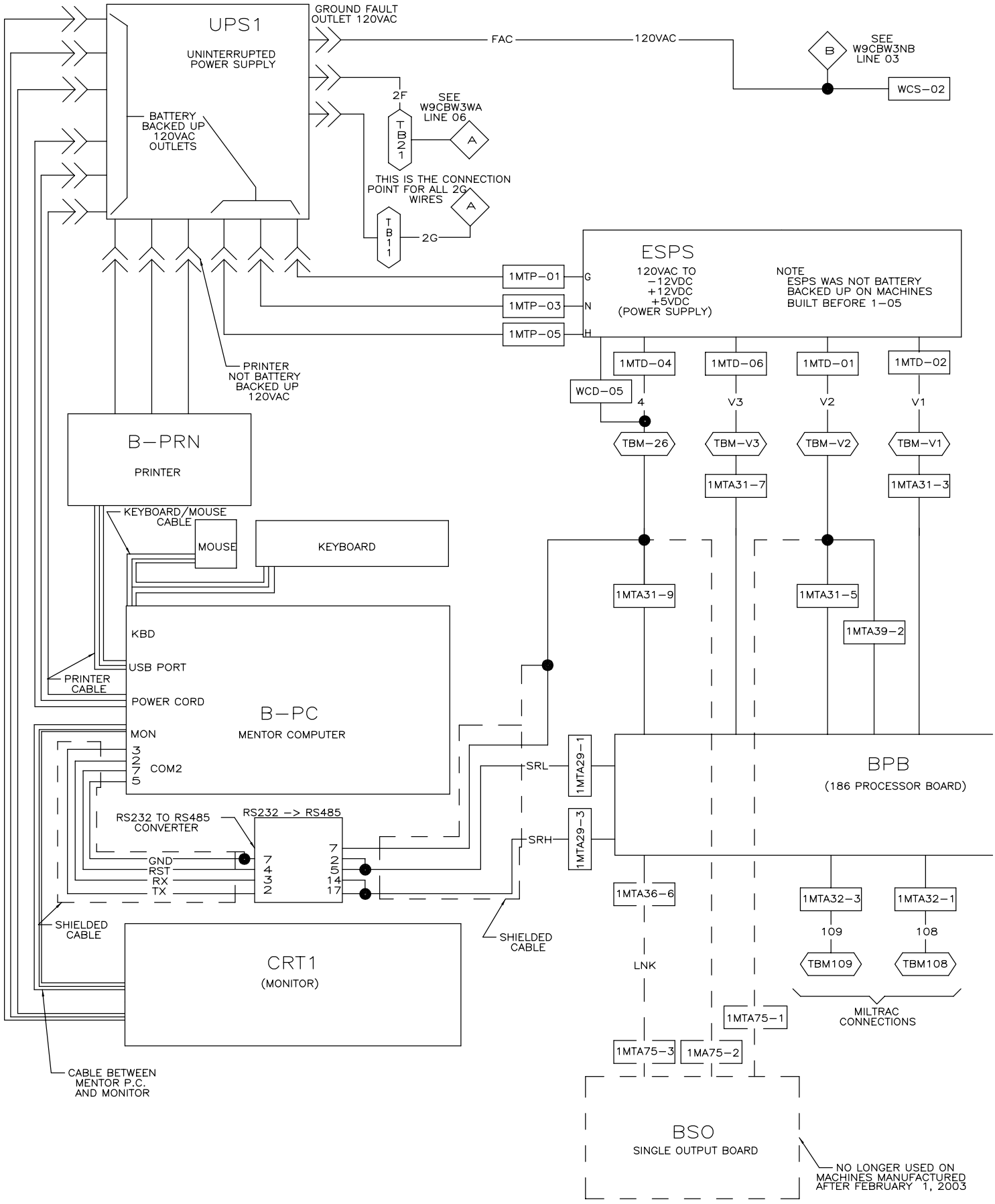
UPS1
UNINTERRUPTED POWER SUPPLY
BATTERY BACKED UP 120VAC OUTLETS
GROUND FAULT OUTLET 120VAC
FAC
120VAC
B
SEE W9CBW3NB LINE 03
WCS-02
2F
SEE W9CBW3WA LINE 06
TB21
A
THIS IS THE CONNECTION POINT FOR ALL 2G WIRES
A
TB11
2G
ESPS
120VAC TO -12VDC +12VDC +5VDC (POWER SUPPLY)
NOTE ESPS WAS NOT BATTERY BACKED UP ON MACHINES BUILT BEFORE 1-05
1MTP-01
1MTP-03
1MTP-05
G
N
H
PRINTER NOT BATTERY BACKED UP 120VAC
1MTD-04
1MTD-06
1MTD-01
1MTD-02
WCD-05
4
V3
V2
V1
TBM-26
TBM-V3
TBM-V2
TBM-V1
1MTA31-7
1MTA31-3
B-PRN
PRINTER
KEYBOARD/MOUSE CABLE
MOUSE
KEYBOARD
1MTA31-9
1MTA31-5
1MTA39-2
KBD
USB PORT
PRINTER CABLE
POWER CORD
B-PC
MENTOR COMPUTER
MON
3
2
7
5
COM2
SRL
SRH
1MTA29-1
1MTA29-3
BPB
(186 PROCESSOR BOARD)
RS232 TO RS485 CONVERTER
RS232 -> RS485
GND
RST
RX
TX
7
4
3
2
7
2
5
14
17
1MTA36-6
1MTA32-3
1MTA32-1
109
108
TBM109
TBM108
SHIELDED CABLE
SHIELDED CABLE
CRT1
(MONITOR)
LNK
MILTRAC CONNECTIONS
1MTA75-1
1MTA75-3
1MA75-2
CABLE BETWEEN MENTOR P.C. AND MONITOR
BSO
SINGLE OUTPUT BOARD
NO LONGER USED ON MACHINES MANUFACTURED AFTER FEBRUARY 1, 2003
00 W9CBW3NB 2011432B
01
02
03
04
05
06
07
08
09

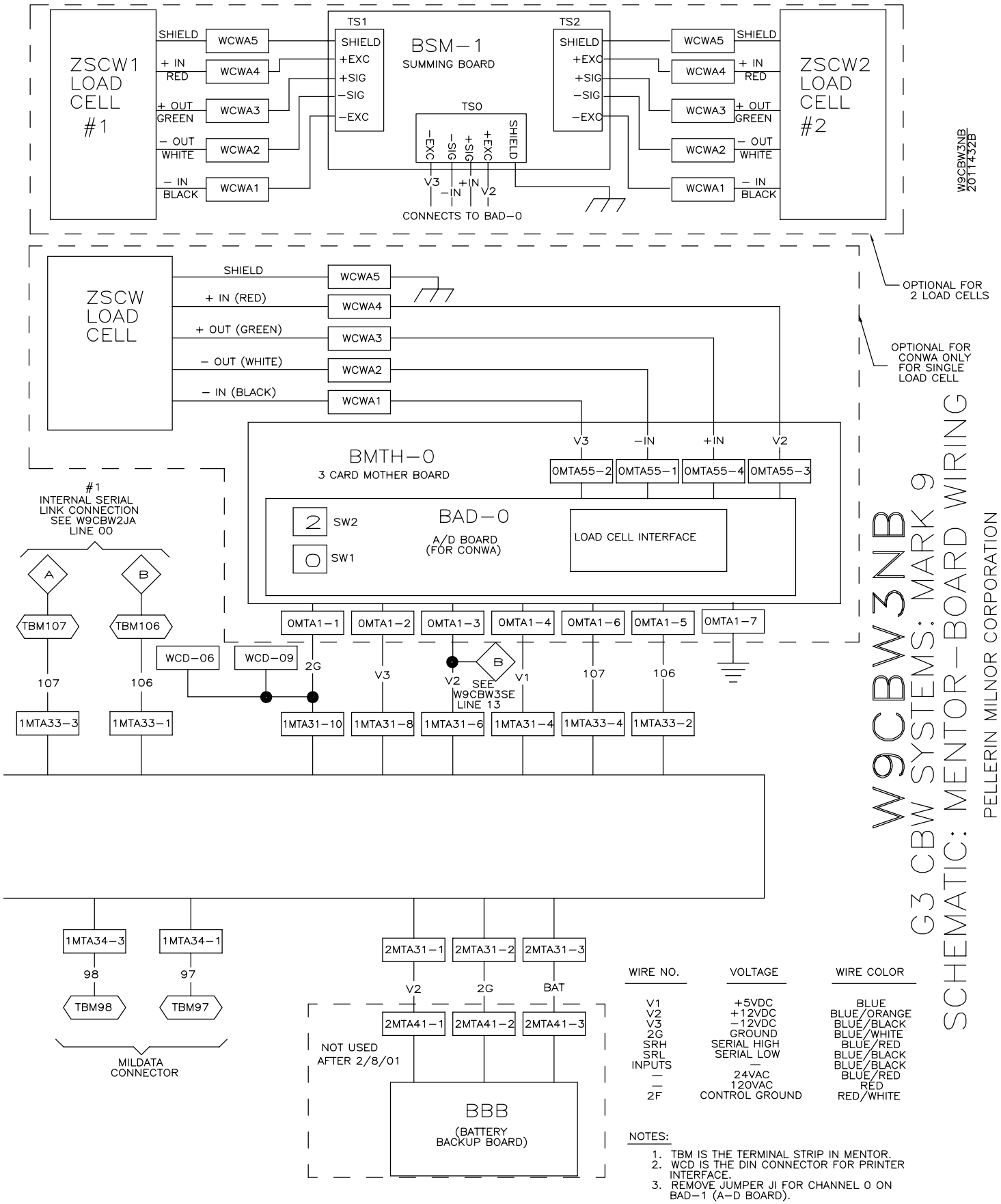

WIRE NO.	VOLTAGE	WIRE COLOR
V1	+5VDC	BLUE
V2	+12VDC	BLUE/ORANGE
V3	−12VDC	BLUE/BLACK
2G	GROUND	BLUE/WHITE
SRH	SERIAL HIGH	BLUE/RED
SRL	SERIAL LOW	BLUE/BLACK
INPUTS	—	BLUE/BLACK
—	24VAC	BLUE/RED
—	120VAC	RED
2F	CONTROL GROUND	RED/WHITE

NOTES:

1. TBM IS THE TERMINAL STRIP IN MENTOR.
2. WCD IS THE DIN CONNECTOR FOR PRINTER INTERFACE.
3. REMOVE JUMPER J1 FOR CHANNEL 0 ON BAD−1 (A−D BOARD).

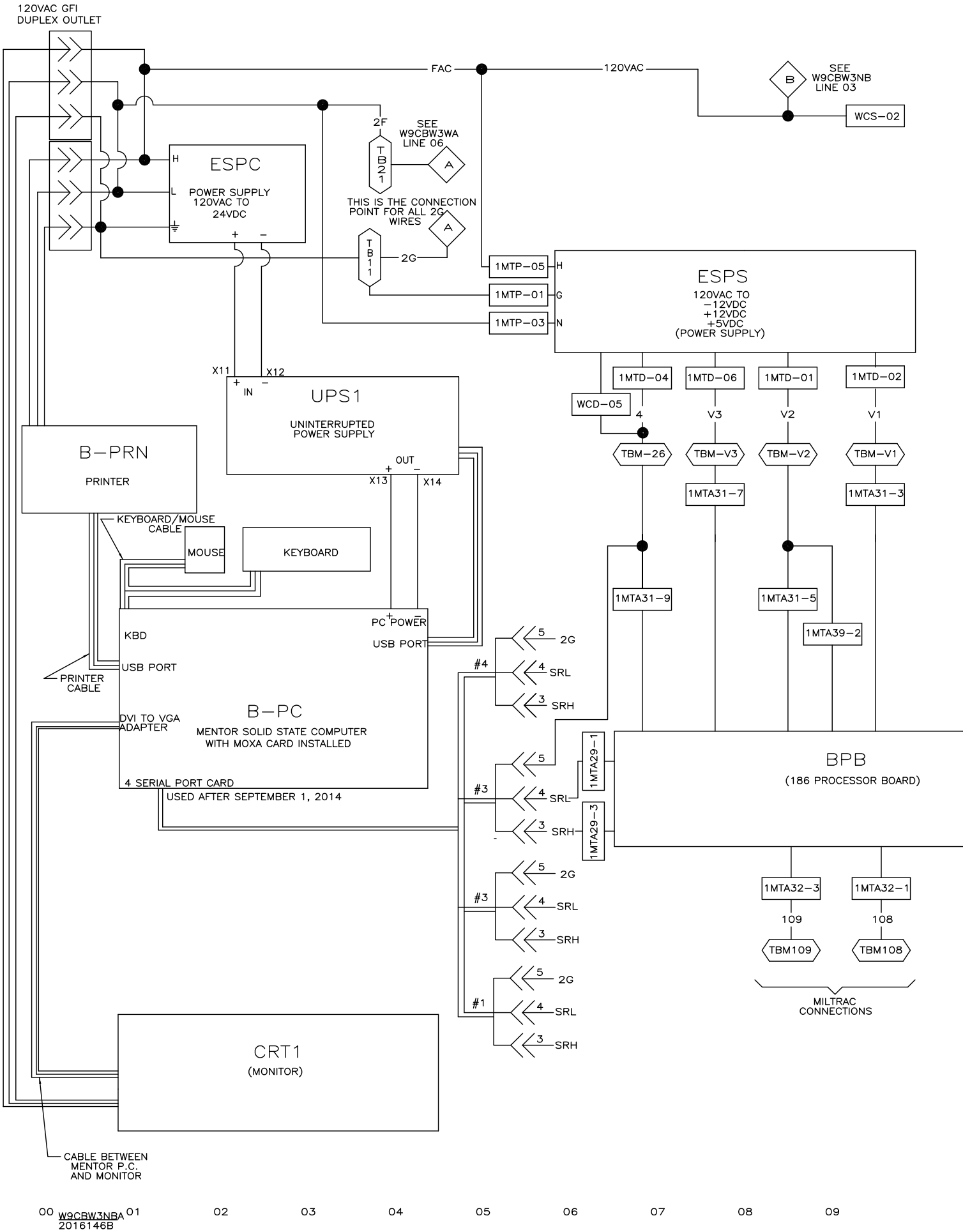
120VAC GFI
DUPLEX OUTLET
FAC
120VAC
SEE
W9CBW3NB
LINE 03
WCS-02
2F
SEE
W9CBW3WA
LINE 06
TB21
THIS IS THE CONNECTION
POINT FOR ALL 2G
WIRES
TB11
2G
ESPC
POWER SUPPLY
120VAC TO
24VDC
H
L
1MTP-05
1MTP-01
1MTP-03
ESPS
120VAC TO
-12VDC
+12VDC
+5VDC
(POWER SUPPLY)
1MTD-04
1MTD-06
1MTD-01
1MTD-02
WCD-05
4
V3
V2
V1
TBM-26
TBM-V3
TBM-V2
TBM-V1
1MTA31-7
1MTA31-3
X11
X12
IN
UPS1
UNINTERRUPTED
POWER SUPPLY
OUT
X13
X14
B-PRN
PRINTER
KEYBOARD/MOUSE
CABLE
MOUSE
KEYBOARD
1MTA31-9
1MTA31-5
1MTA39-2
PC POWER
KBD
USB PORT
USB PORT
PRINTER
CABLE
DVI TO VGA
ADAPTER
B-PC
MENTOR SOLID STATE COMPUTER
WITH MOXA CARD INSTALLED
4 SERIAL PORT CARD
USED AFTER SEPTEMBER 1, 2014
#4
#3
#3
#1
2G
SRL
SRH
1MTA29-1
1MTA29-3
BPB
(186 PROCESSOR BOARD)
1MTA32-3
1MTA32-1
109
108
TBM109
TBM108
MILTRAC
CONNECTIONS
CRT1
(MONITOR)
CABLE BETWEEN
MENTOR P.C.
AND MONITOR
00
W9CBW3NBA
2016146B
01
02
03
04
05
06
07
08
09

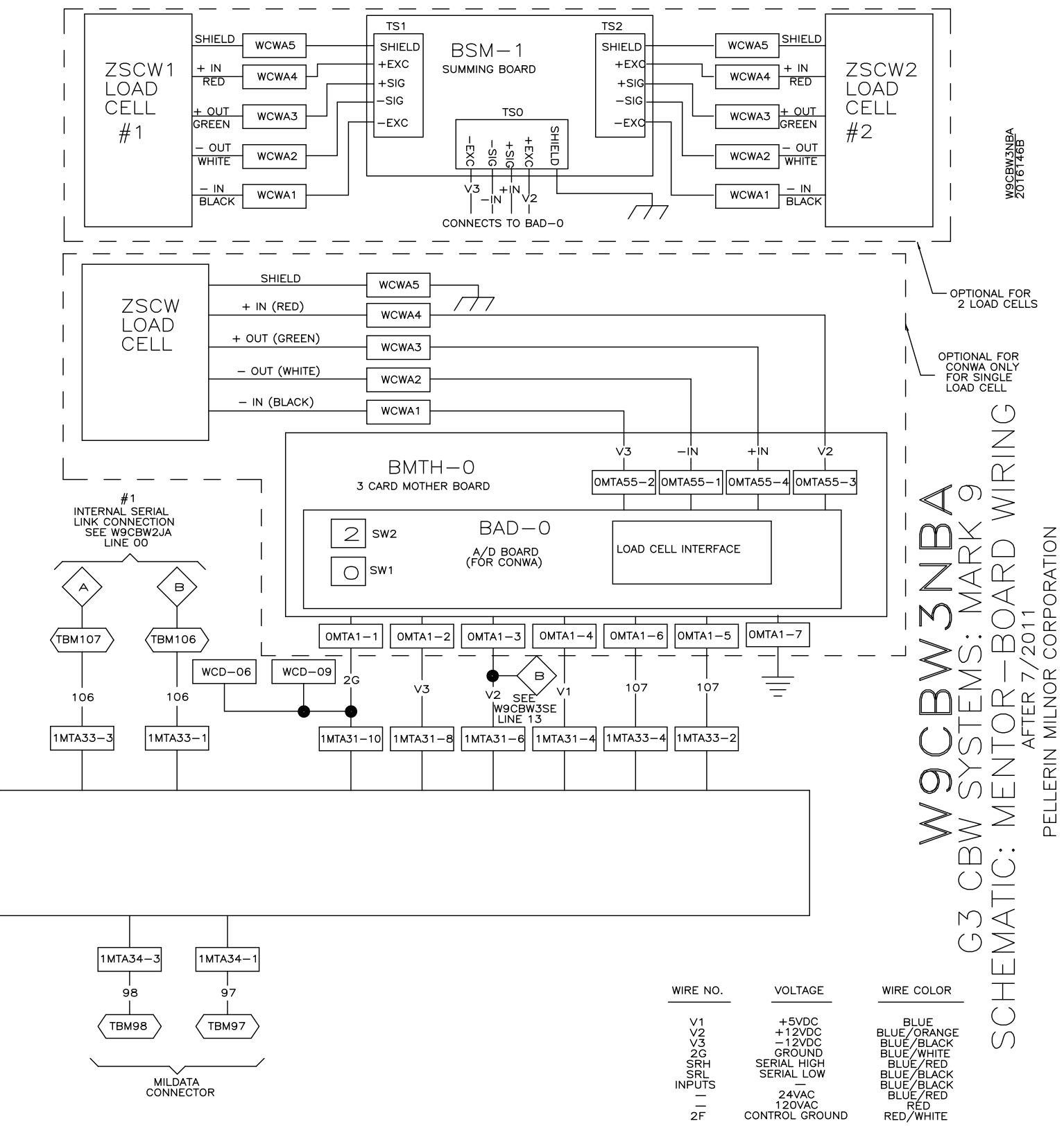

W9CBW3NBA

G3 CBW SYSTEMS: MARK 9

SCHEMATIC: MENTOR−BOARD WIRING

AFTER 7/2011

PELLERIN MILNOR CORPORATION

WIRE NO.	VOLTAGE	WIRE COLOR
V1	+5VDC	BLUE
V2	+12VDC	BLUE/ORANGE
V3	−12VDC	BLUE/BLACK
2G	GROUND	BLUE/WHITE
SRH	SERIAL HIGH	BLUE/RED
SRL	SERIAL LOW	BLUE/BLACK
INPUTS	—	BLUE/BLACK
—	24VAC	BLUE/RED
—	120VAC	RED
2F	CONTROL GROUND	RED/WHITE

NOTES:

1. TBM IS THE TERMINAL STRIP IN MENTOR.
2. WCD IS THE DIN CONNECTOR FOR PRINTER INTERFACE.
3. REMOVE JUMPER JI FOR CHANNEL 0 ON BAD−1 (A−D BOARD).

10 11 12 13 14 15 16 17 18 19

W9CBW3NBA
2016146B

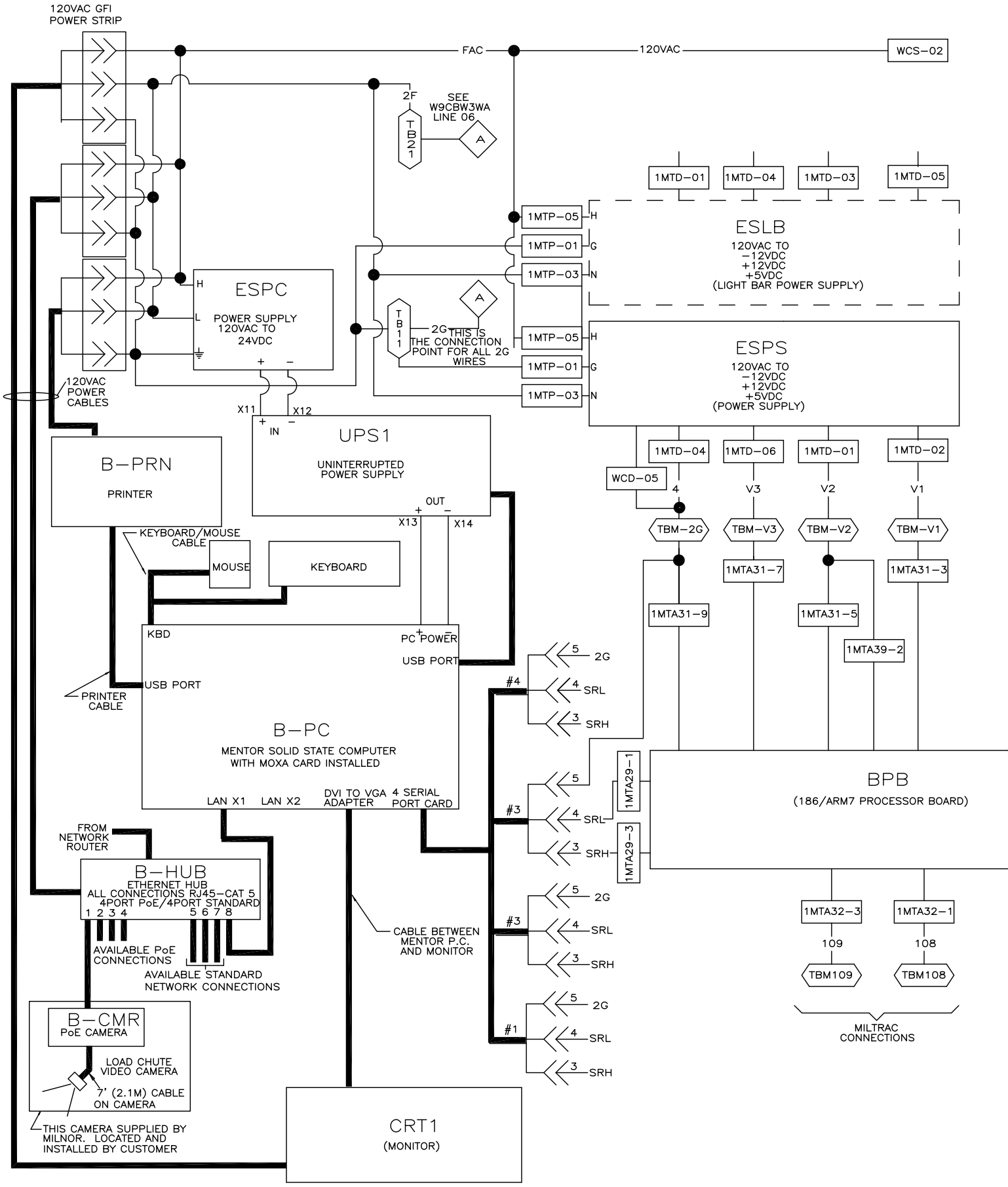
120VAC GFI POWER STRIP
FAC
120VAC
WCS-02
2F
SEE W9CBW3WA LINE 06
TB21
A
1MTD-01
1MTD-04
1MTD-03
1MTD-05
1MTP-05
1MTP-01
1MTP-03
H
G
N
ESLB
120VAC TO
-12VDC
+12VDC
+5VDC
(LIGHT BAR POWER SUPPLY)
ESPC
POWER SUPPLY
120VAC TO
24VDC
TB11
2G
THIS IS THE CONNECTION POINT FOR ALL 2G WIRES
ESPS
120VAC TO
-12VDC
+12VDC
+5VDC
(POWER SUPPLY)
120VAC POWER CABLES
X11
X12
IN
UPS1
UNINTERRUPTED POWER SUPPLY
OUT
X13
X14
B-PRN
PRINTER
1MTD-04
1MTD-06
1MTD-01
1MTD-02
WCD-05
4
V3
V2
V1
TBM-2G
TBM-V3
TBM-V2
TBM-V1
KEYBOARD/MOUSE CABLE
MOUSE
KEYBOARD
1MTA31-7
1MTA31-3
1MTA31-9
1MTA31-5
1MTA39-2
KBD
PC POWER
USB PORT
PRINTER CABLE
B-PC
MENTOR SOLID STATE COMPUTER WITH MOXA CARD INSTALLED
LAN X1
LAN X2
DVI TO VGA ADAPTER
4 SERIAL PORT CARD
#4
#3
#1
5
4
3
2G
SRL
SRH
1MTA29-1
1MTA29-3
BPB
(186/ARM7 PROCESSOR BOARD)
FROM NETWORK ROUTER
B-HUB
ETHERNET HUB
ALL CONNECTIONS RJ45-CAT 5
4PORT PoE/4PORT STANDARD
1 2 3 4
5 6 7 8
AVAILABLE PoE CONNECTIONS
AVAILABLE STANDARD NETWORK CONNECTIONS
CABLE BETWEEN MENTOR P.C. AND MONITOR
1MTA32-3
1MTA32-1
109
108
TBM109
TBM108
MILTRAC CONNECTIONS
B-CMR
PoE CAMERA
LOAD CHUTE VIDEO CAMERA
7' (2.1M) CABLE ON CAMERA
THIS CAMERA SUPPLIED BY MILNOR. LOCATED AND INSTALLED BY CUSTOMER
CRT1
(MONITOR)
00
W9CBW3NBB
2021025B
01
02
03
04
05
06
07
08
09

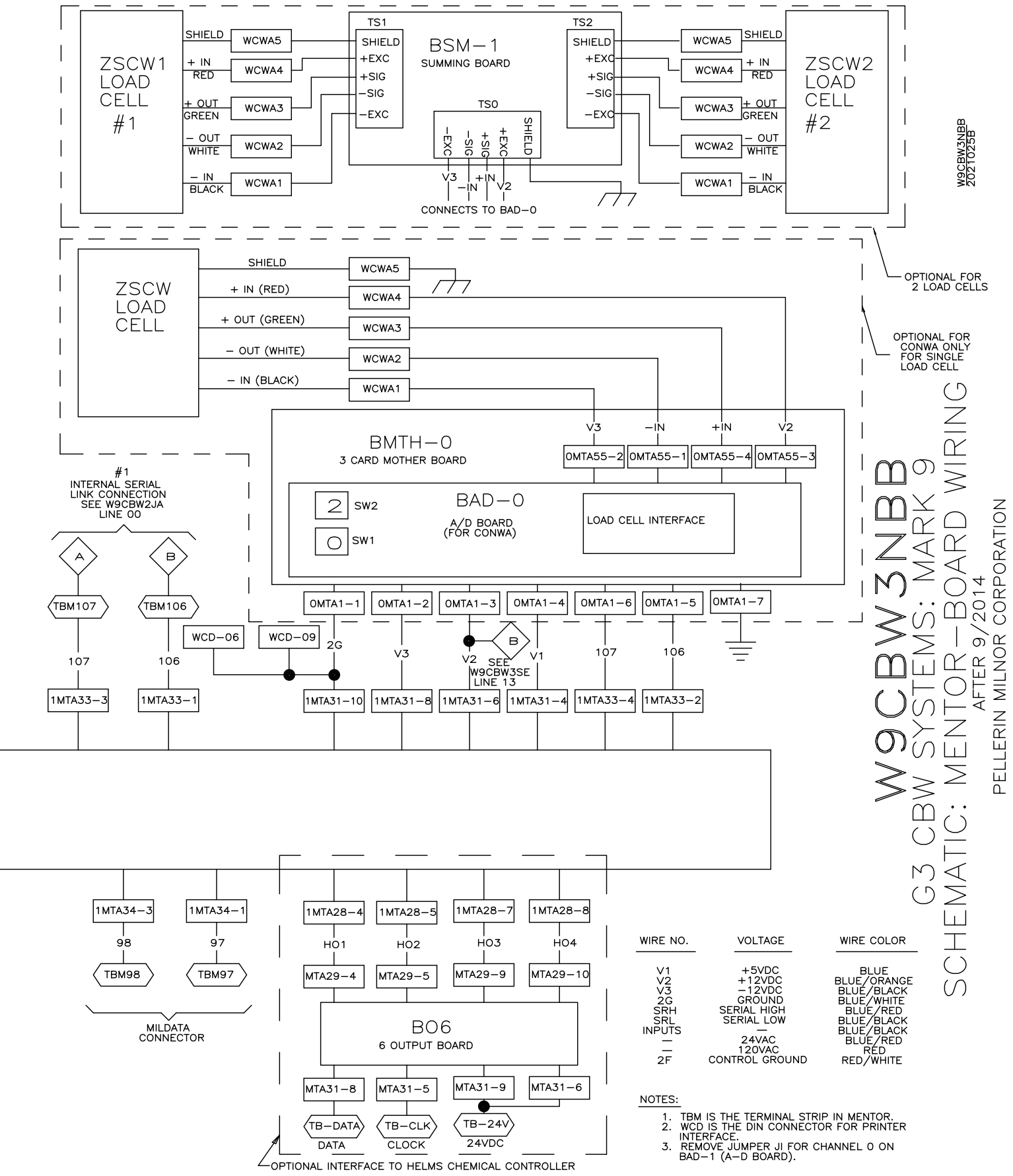

WIRE NO.	VOLTAGE	WIRE COLOR
V1	+5VDC	BLUE
V2	+12VDC	BLUE/ORANGE
V3	−12VDC	BLUE/BLACK
2G	GROUND	BLUE/WHITE
SRH	SERIAL HIGH	BLUE/RED
SRL	SERIAL LOW	BLUE/BLACK
INPUTS	—	BLUE/BLACK
—	24VAC	BLUE/RED
—	120VAC	RED
2F	CONTROL GROUND	RED/WHITE

NOTES:

1. TBM IS THE TERMINAL STRIP IN MENTOR.
2. WCD IS THE DIN CONNECTOR FOR PRINTER INTERFACE.
3. REMOVE JUMPER JI FOR CHANNEL 0 ON BAD−1 (A−D BOARD).

10 11 12 13 14 15 16 17 18 19

W9CBW3NBB
2021025B

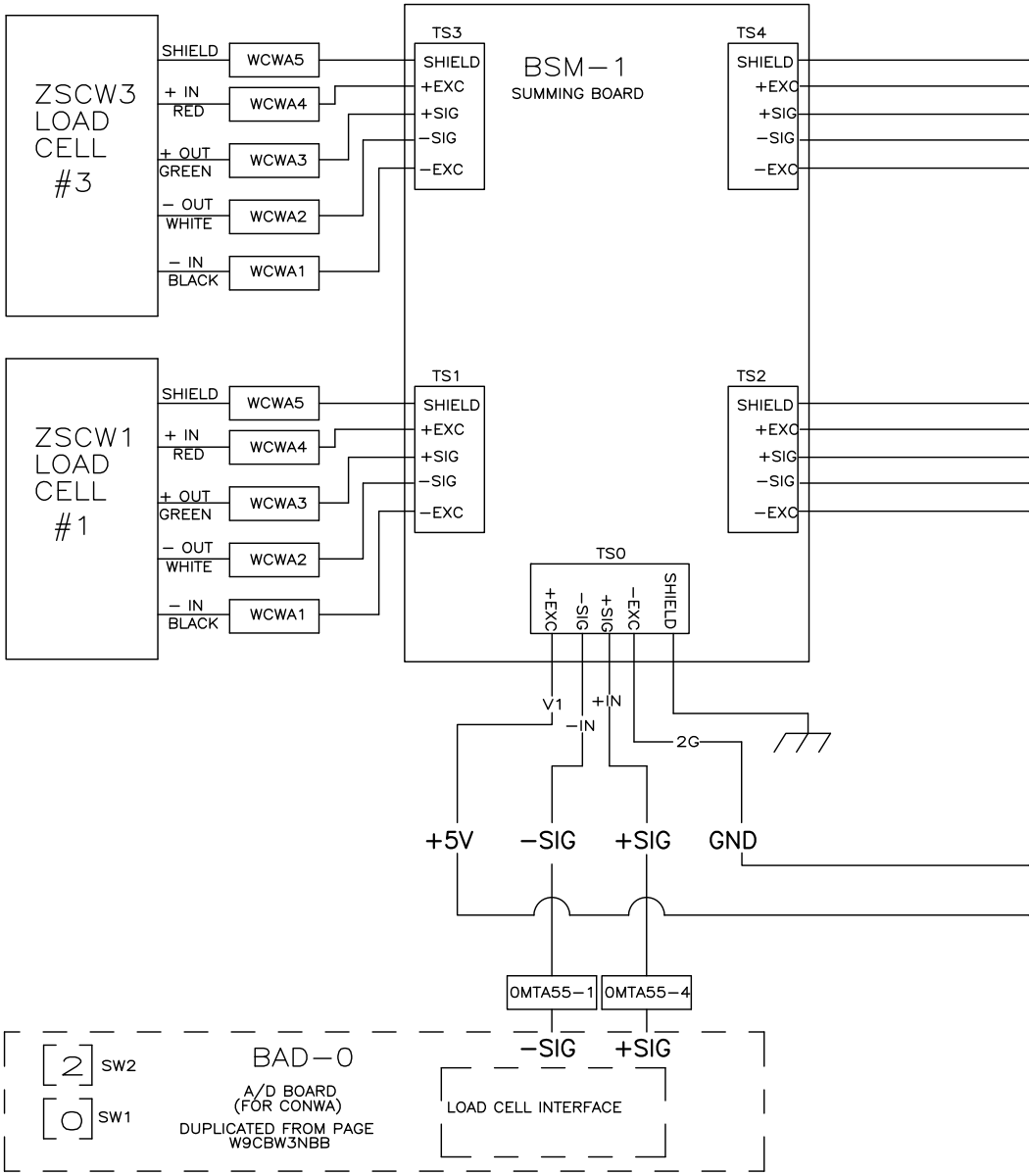

00 W9CBW3NBD 01 02 03 04 05 06 07 08 09
2022404B

W9CBW3NBD

G3 CBW SYSTEMS: MARK 9

SCHEMATIC: MENTOR–OPTIONAL 4 LOAD CELLS

PELLERIN MILNOR CORPORATION

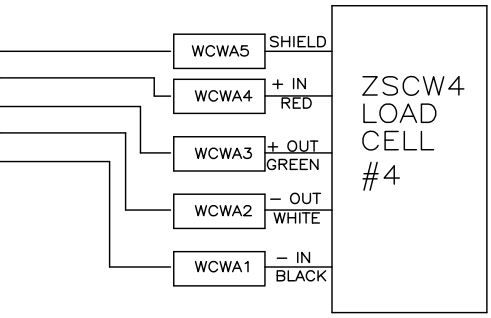

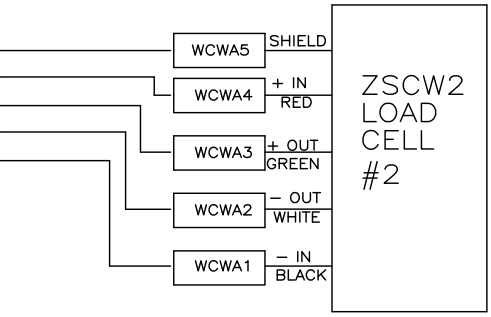

BLACK ROUND CONNECTOR
1 BLACK = –EXC – NO CONNECTION TO SUMMING BOARD
2 WHITE = –SIG
3 GREEN = +SIG
4 RED = +EXC – NO CONNECTION TO SUMMING BOARD
5 SHIELD = CONNECT TO GROUND

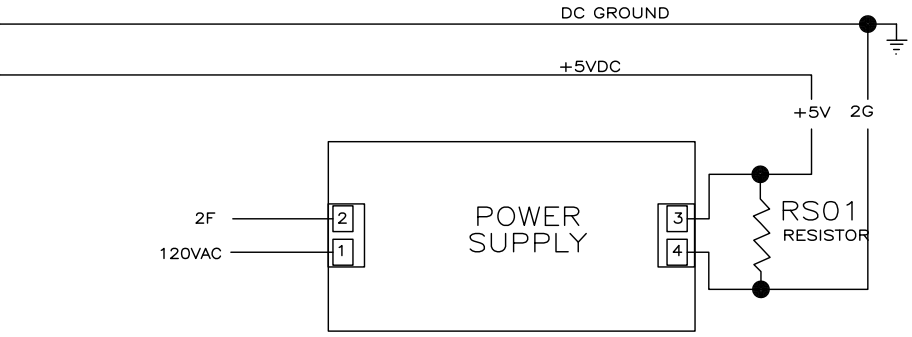

WIRE NO.	VOLTAGE	WIRE COLOR
V1	+5VDC	BLUE
V2	+12VDC	BLUE/ORANGE
V3	–12VDC	BLUE/BLACK
2G	GROUND	BLUE/WHITE
SRH	SERIAL HIGH	BLUE/RED
SRL	SERIAL LOW	BLUE/BLACK
INPUTS	—	BLUE/BLACK
—	24VAC	BLUE/RED
—	120VAC	RED
2F	CONTROL GROUND	RED/WHITE

10 11 12 13 14 15 16 17 18 19

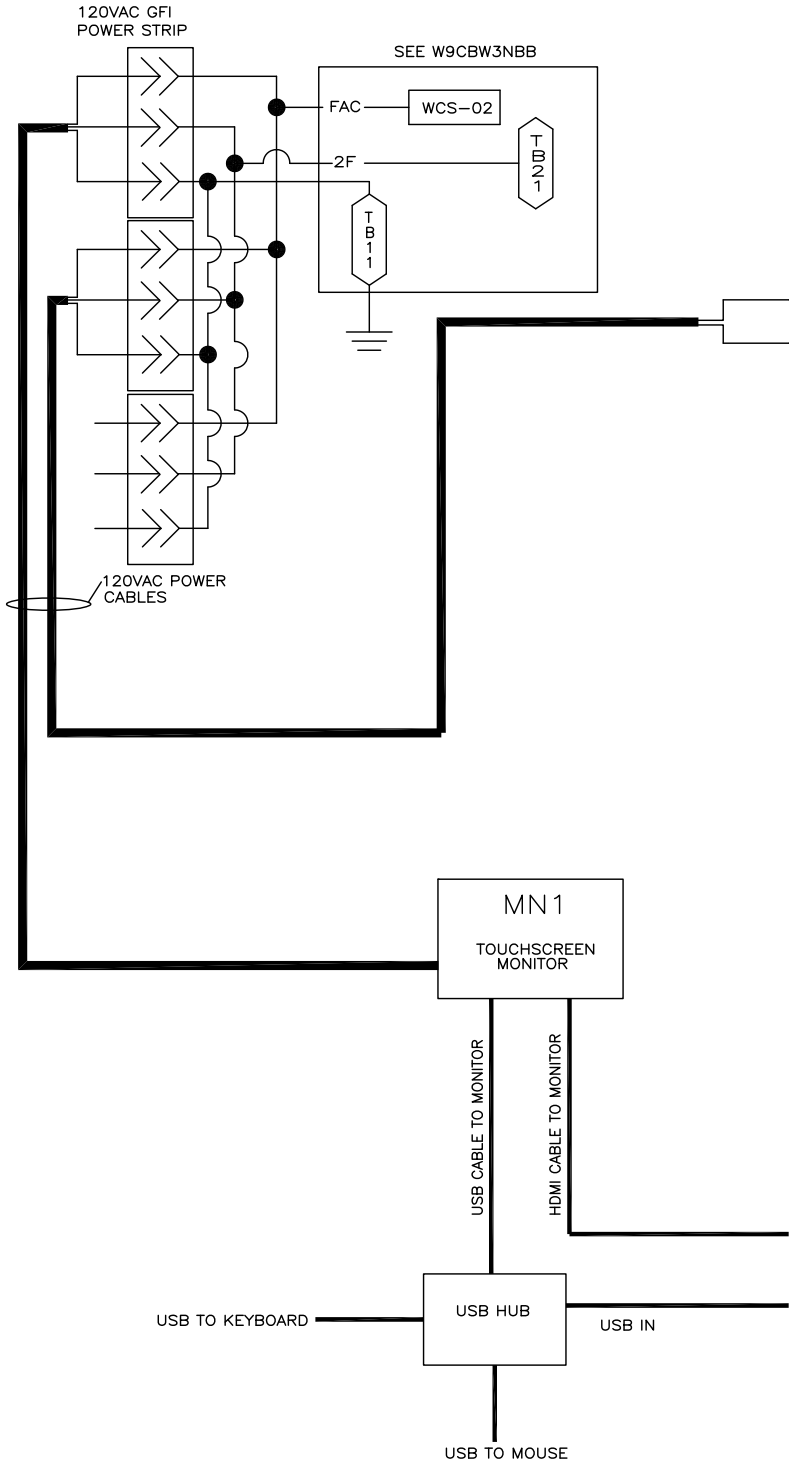

00 01 02 03 04 05 06 07 08 09 10

W9CBW3NBE
2022404B

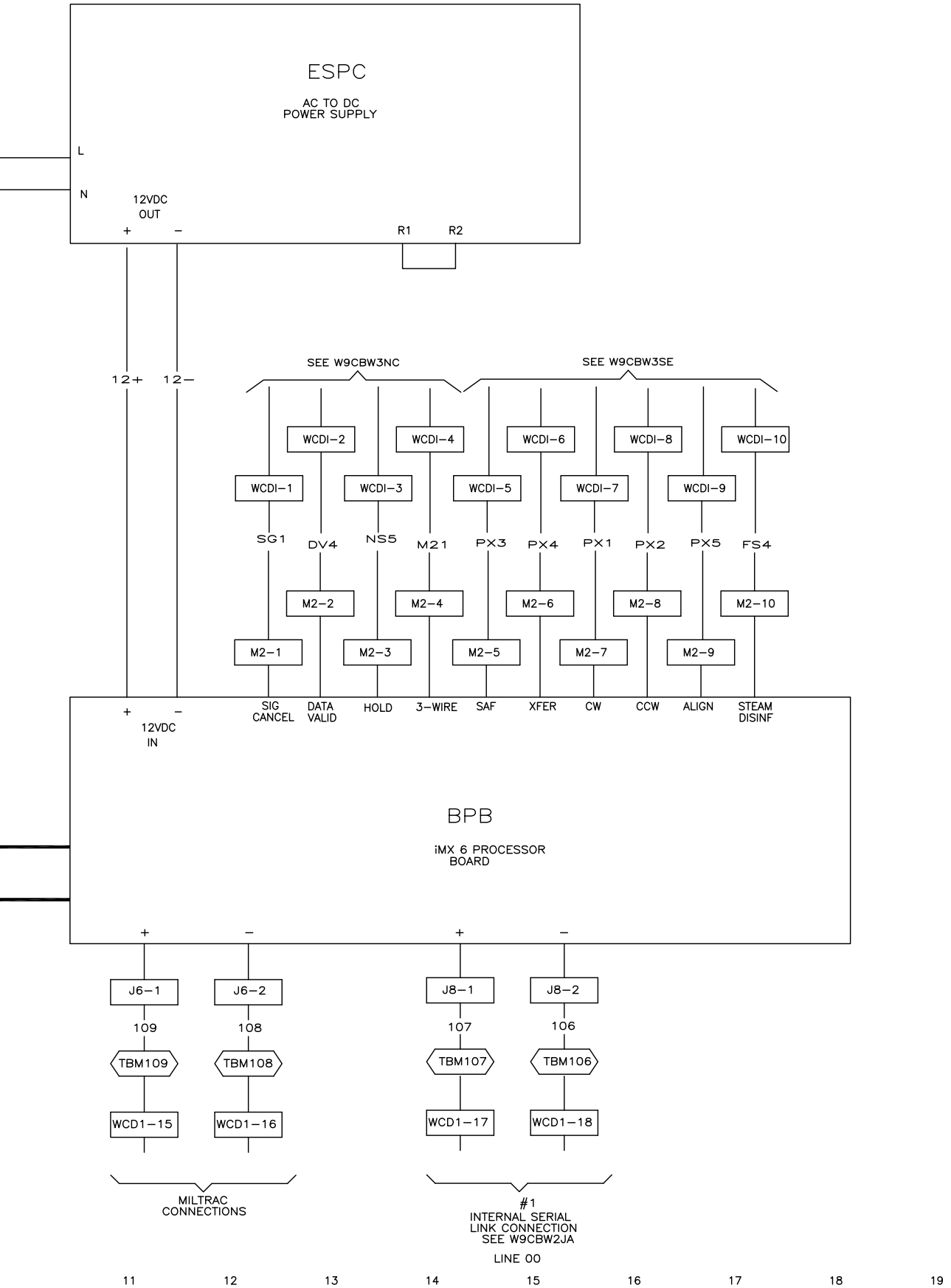

W9CBW3NBE

G3 CBW SYSTEMS: MARK 9

SCHEMATIC: MENTOR iMX6 PROCESSOR

PELLERIN MILNOR CORPORATION

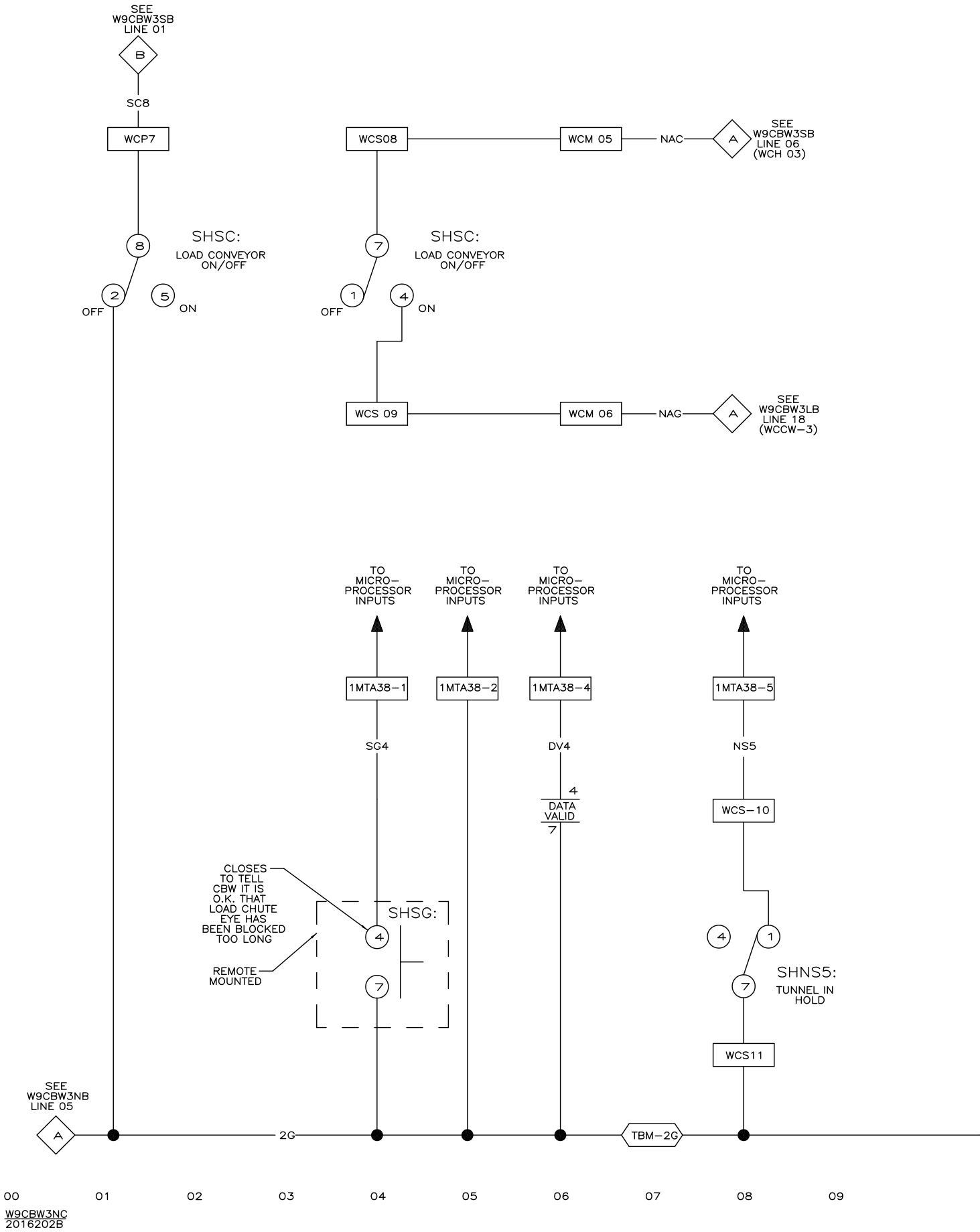
SEE W9CBW3SB LINE 01
B
SC8
WCP7
8
SHSC:
LOAD CONVEYOR ON/OFF
2
OFF
5
ON
WCS08
WCM 05
NAC
A
SEE W9CBW3SB LINE 06 (WCH 03)
7
SHSC:
LOAD CONVEYOR ON/OFF
1
OFF
4
ON
WCS 09
WCM 06
NAG
A
SEE W9CBW3LB LINE 18 (WCCW-3)
TO MICRO-PROCESSOR INPUTS
TO MICRO-PROCESSOR INPUTS
TO MICRO-PROCESSOR INPUTS
TO MICRO-PROCESSOR INPUTS
1MTA38-1
1MTA38-2
1MTA38-4
1MTA38-5
SG4
DV4
NS5
4
DATA VALID
7
WCS-10
CLOSES TO TELL CBW IT IS O.K. THAT LOAD CHUTE EYE HAS BEEN BLOCKED TOO LONG
REMOTE MOUNTED
SHSG:
4
7
4
1
7
SHNS5:
TUNNEL IN HOLD
WCS11
SEE W9CBW3NB LINE 05
A
2G
TBM-2G
00
01
02
03
04
05
06
07
08
09
W9CBW3NC
2016202B

W9CBW3NC

G3 CBW SYSTEMS MARK 9
SCHEMATIC: MENTOR
MICROPROCESSOR INPUTS

PELLERIN MILNOR CORPORATION

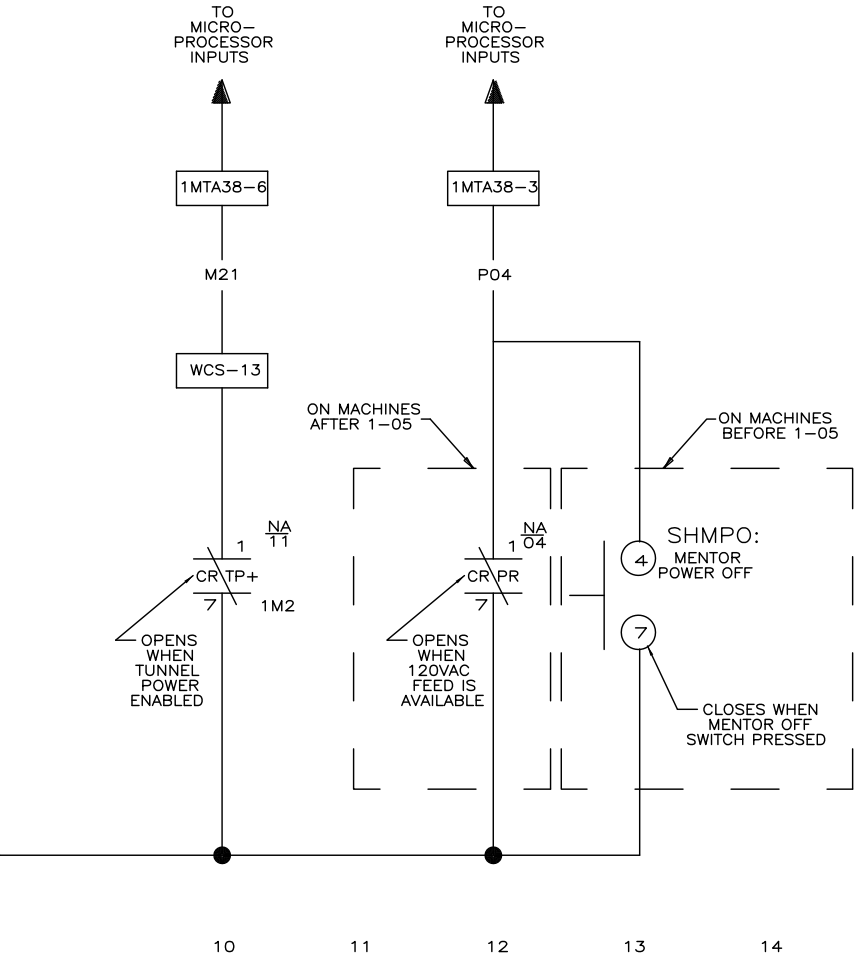

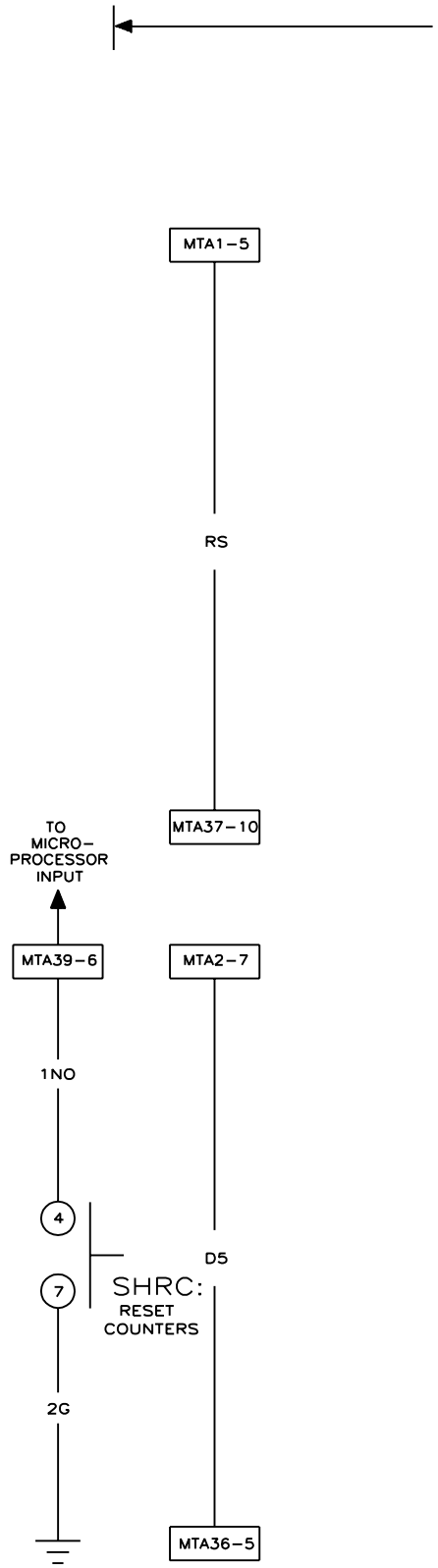

00 01 02 03 04 05 06 07 08 09 10

W9CBW3ND
2001314B

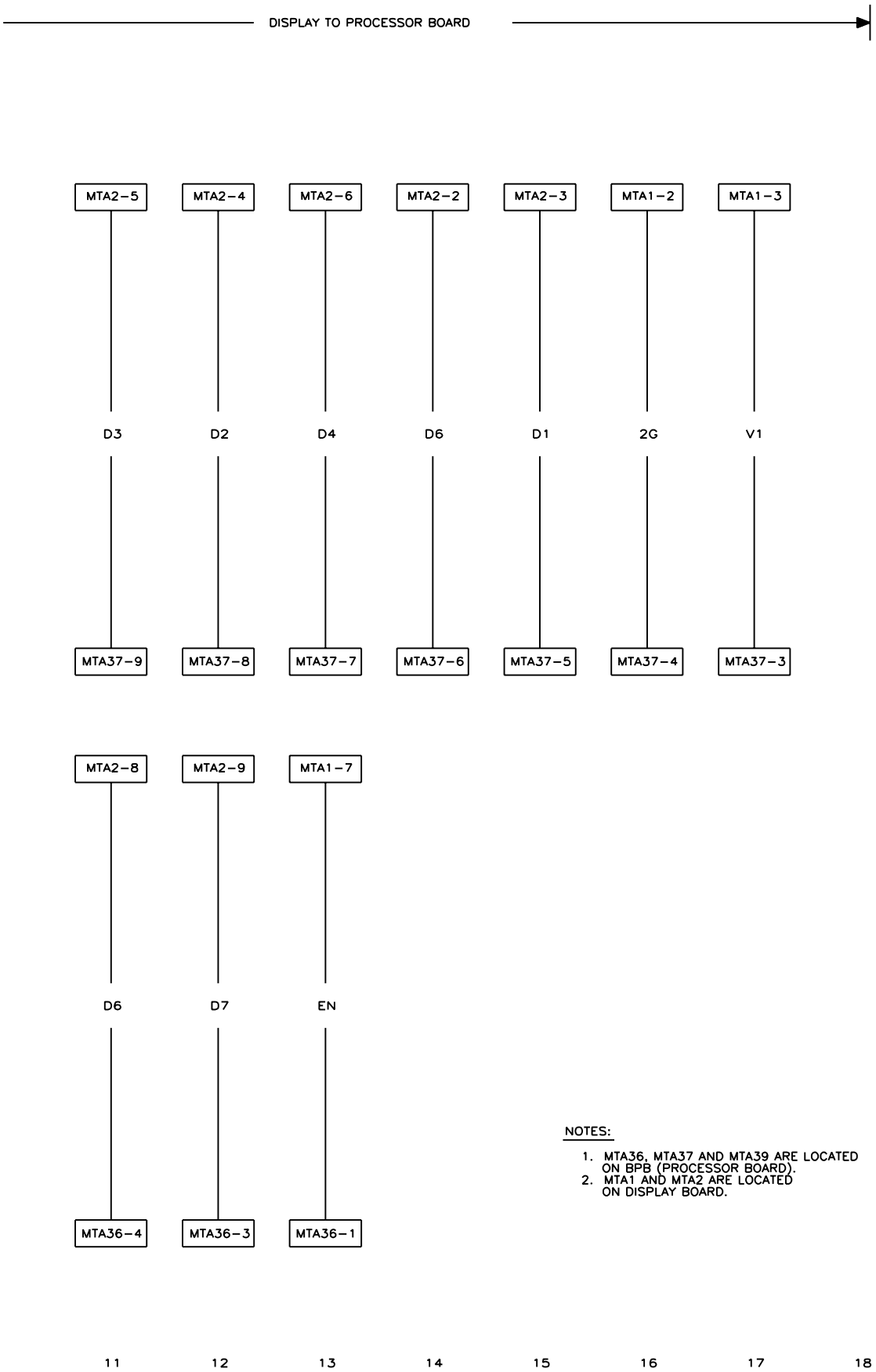

NOTES:

1. MTA36, MTA37 AND MTA39 ARE LOCATED ON BPB (PROCESSOR BOARD).
2. MTA1 AND MTA2 ARE LOCATED ON DISPLAY BOARD.

W9CBW3ND
MENTOR DIAGNOSTIC LCD DISPLAY

PELLERIN MILNOR CORPORATION

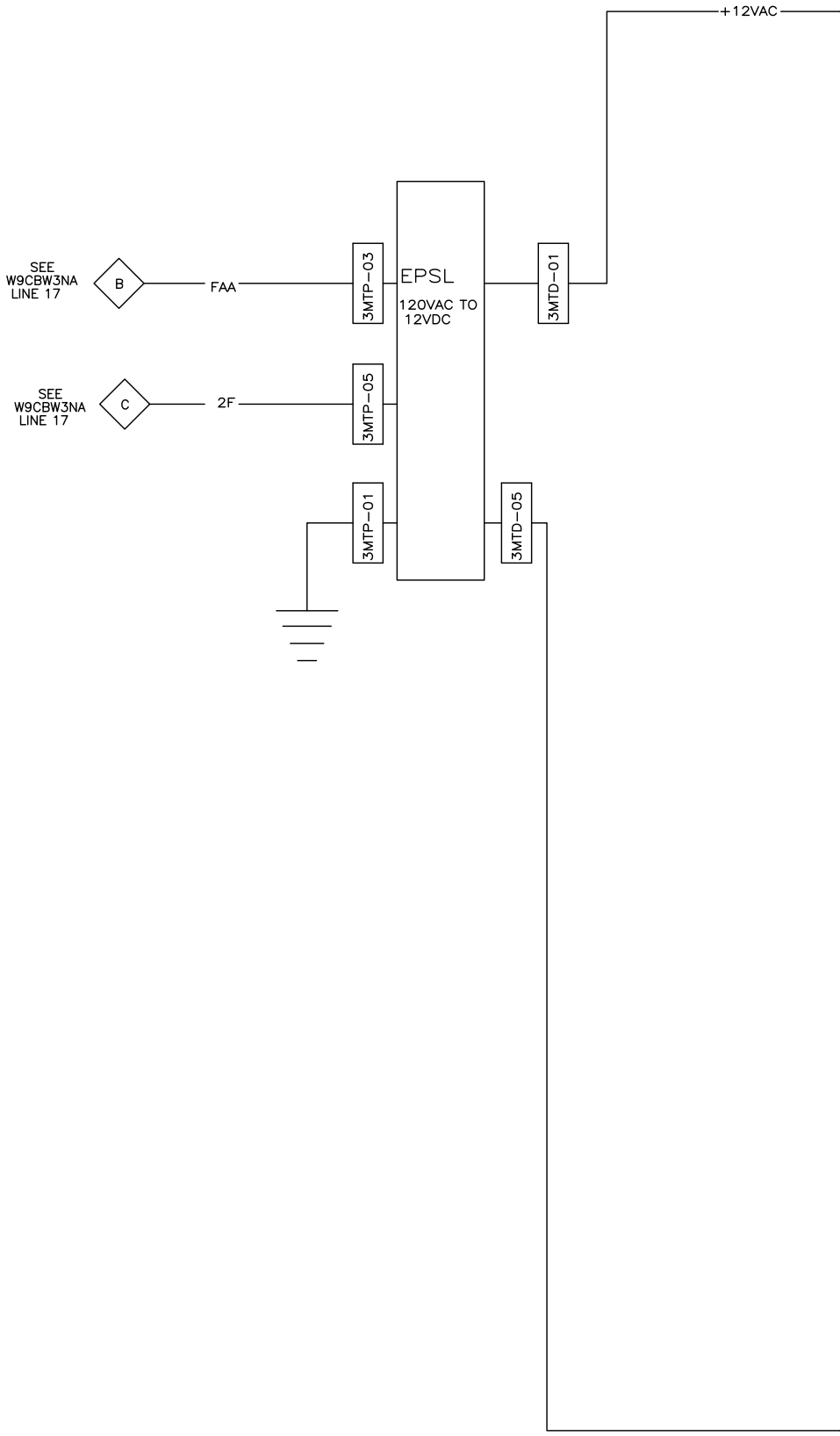

00 01 02 03 04 05 06 07 08 09

W9CBW3NFS
2016194B

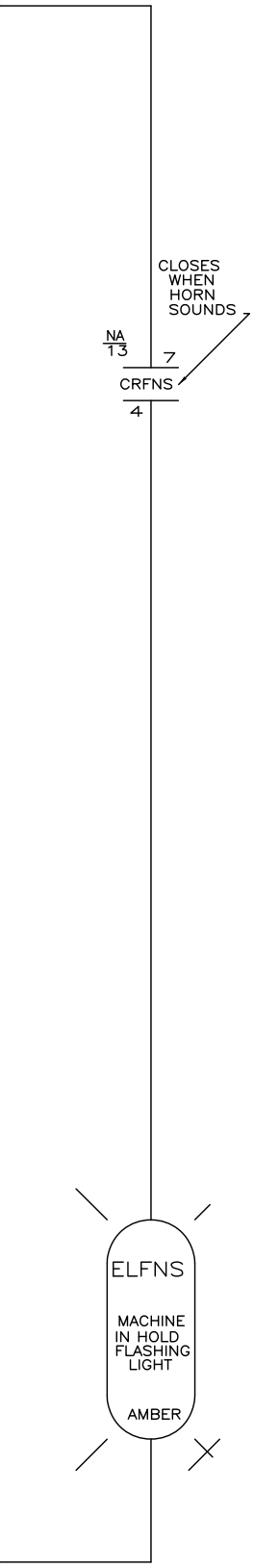

10 11 12

W9CBW3NFS

SCHEMATIC: OPTIONAL FLASHING LED SIGNAL LIGHTS

PELLERIN MILNOR CORPORATION

W9CBW3NFS
2016194B

W9CBW3NFS
2016194B

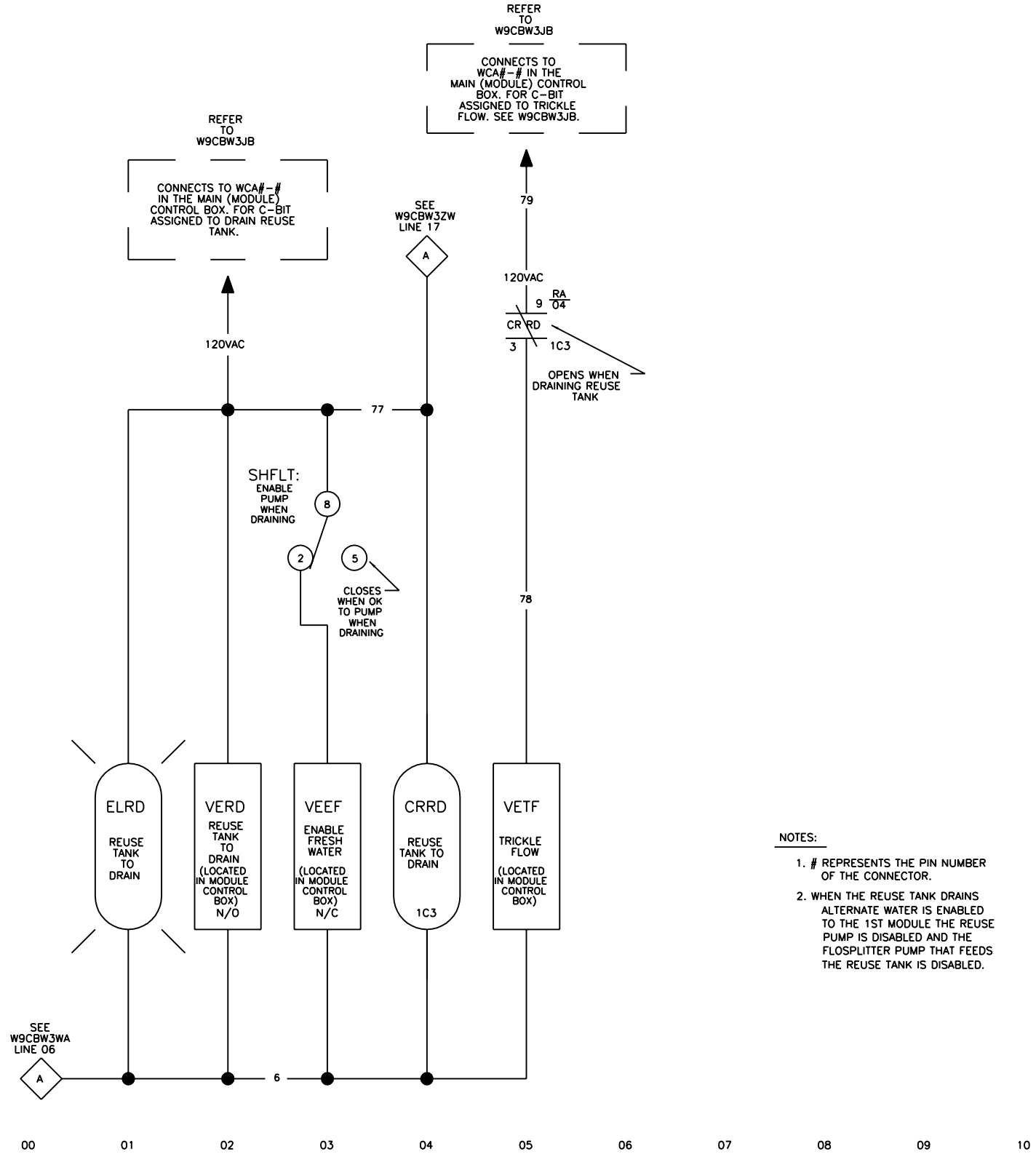

NOTES:

1. # REPRESENTS THE PIN NUMBER OF THE CONNECTOR.
2. WHEN THE REUSE TANK DRAINS ALTERNATE WATER IS ENABLED TO THE 1ST MODULE THE REUSE PUMP IS DISABLED AND THE FLOSPLITTER PUMP THAT FEEDS THE REUSE TANK IS DISABLED.

W9CBW3RA
2003236B

W9CBW3RA

G3 CBW SYSTEMS MARK 9
SCHEMATIC: REUSE TANK TO DRAIN

110V50HZ/120V60HZ

PELLERIN MILNOR CORPORATION

W9CBW3RA
2003236B

W9CBW3RA
2003236B

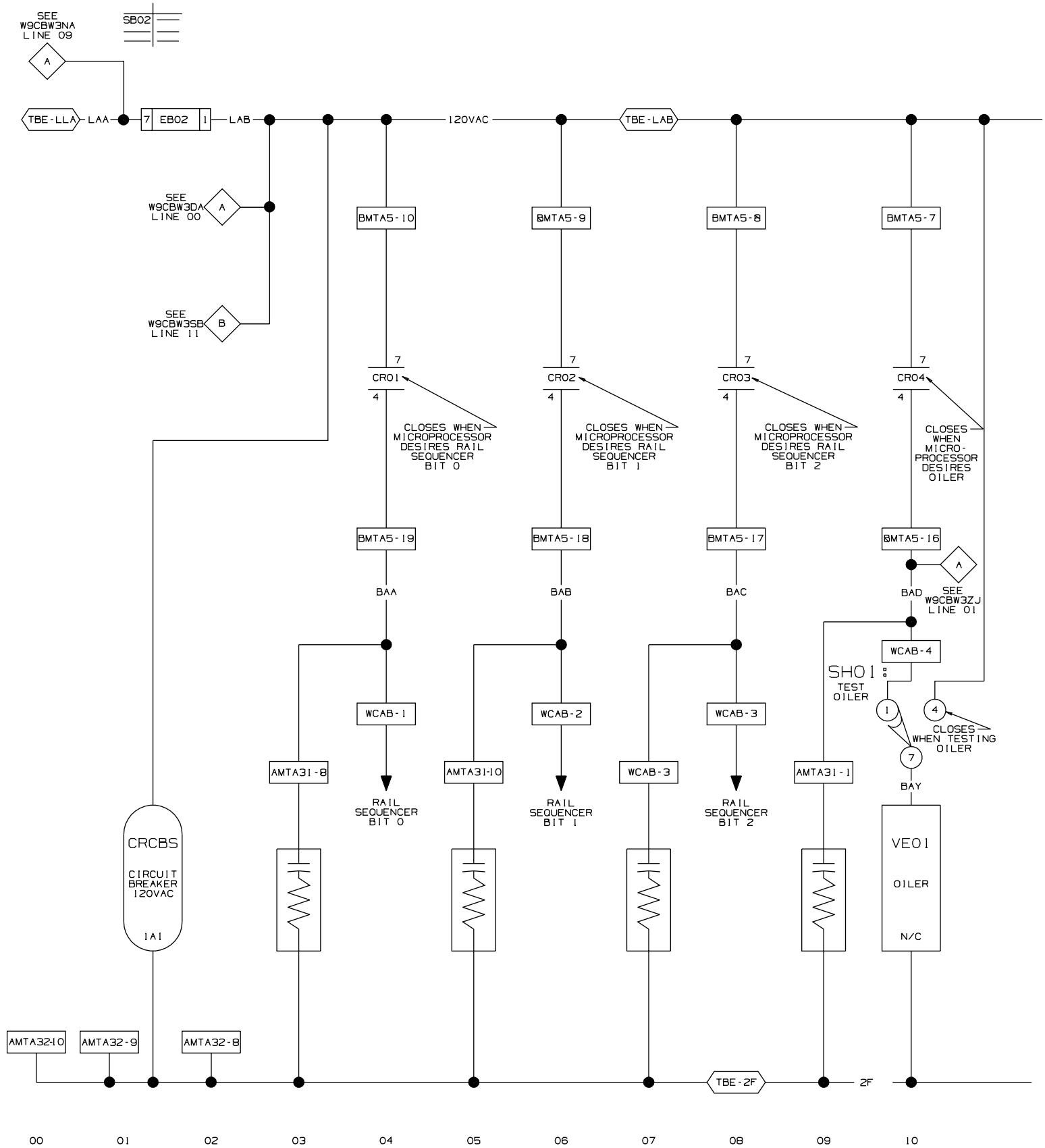

W9CBW3SA
99193B

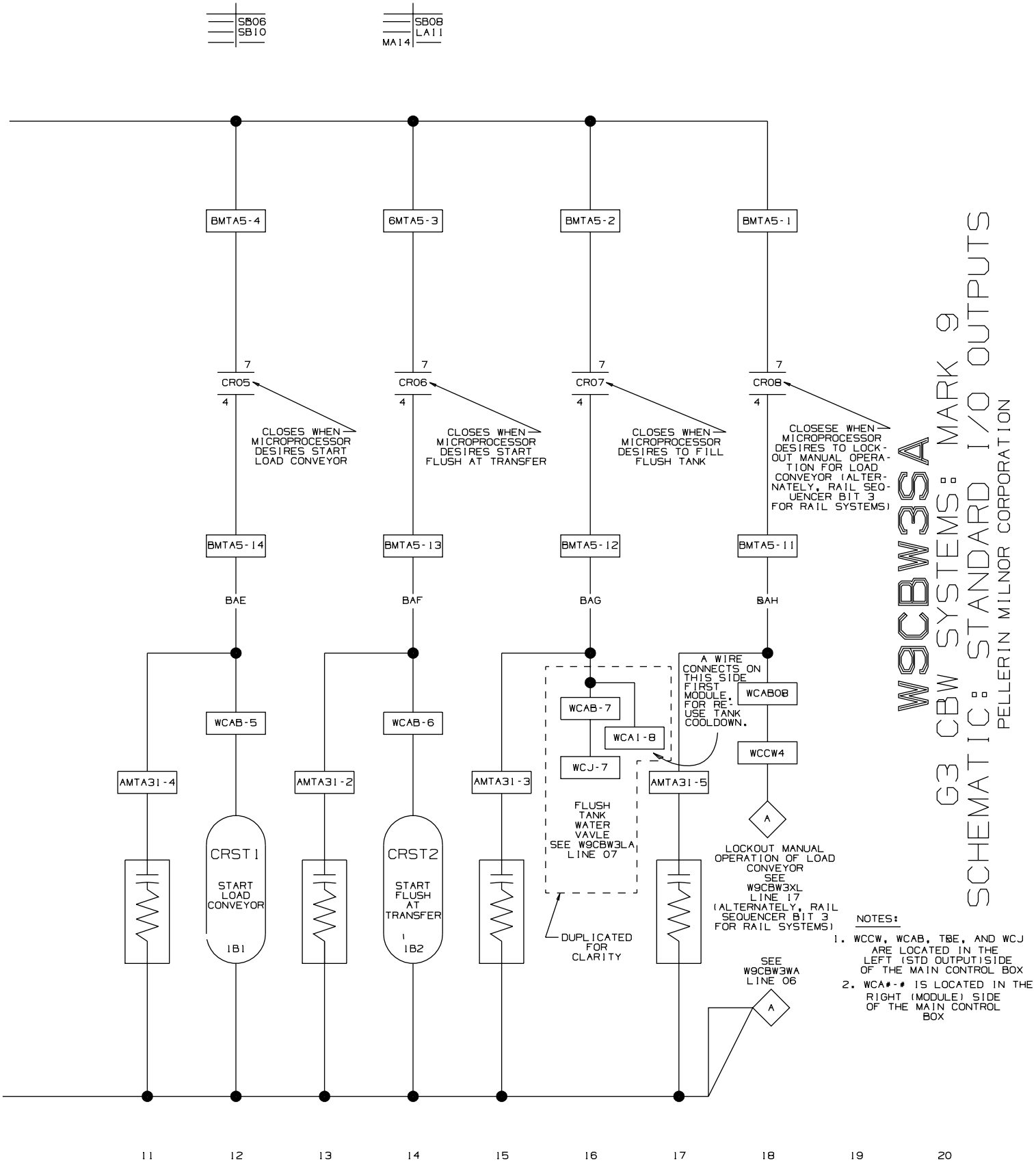

W9CBW3SA

G3 CBW SYSTEMS: MARK 9

SCHEMATIC: STANDARD I/O OUTPUTS

PELLERIN MILNOR CORPORATION

NOTES:

1. WCCW, WCAB, TBE, AND WCJ ARE LOCATED IN THE LEFT (STD OUTPUT)SIDE OF THE MAIN CONTROL BOX
2. WCA#-# IS LOCATED IN THE RIGHT (MODULE) SIDE OF THE MAIN CONTROL BOX

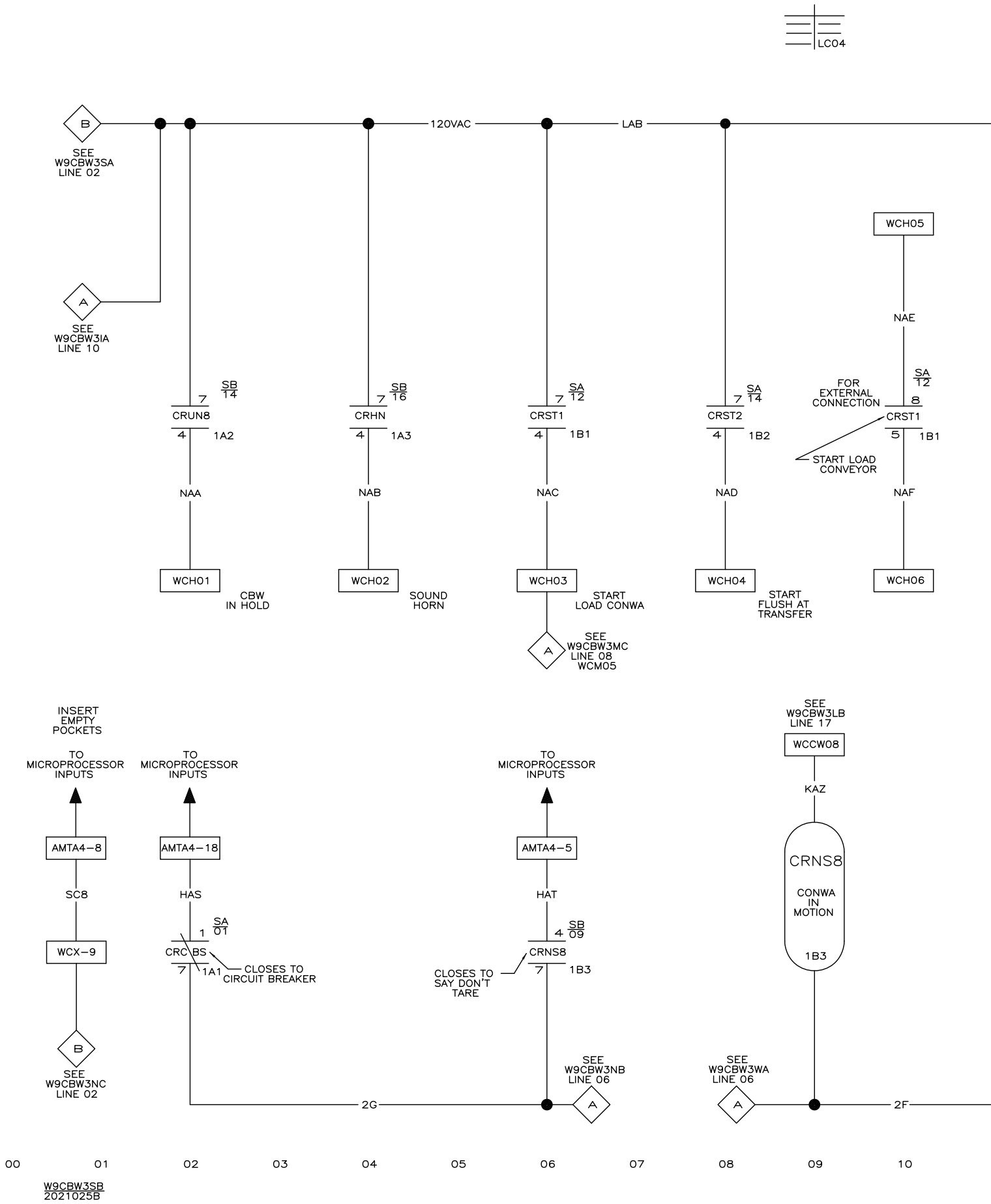
LC04
B
SEE W9CBW3SA LINE 02
A
SEE W9CBW3IA LINE 10
120VAC
LAB
WCH05
NAE
SA 12
FOR EXTERNAL CONNECTION
8
CRST1
5
1B1
START LOAD CONVEYOR
NAF
WCH06
7
SB 14
CRUN8
4
1A2
NAA
WCH01
CBW IN HOLD
7
SB 16
CRHN
4
1A3
NAB
WCH02
SOUND HORN
7
SA 12
CRST1
4
1B1
NAC
WCH03
START LOAD CONWA
A
SEE W9CBW3MC LINE 08 WCM05
7
SA 14
CRST2
4
1B2
NAD
WCH04
START FLUSH AT TRANSFER
INSERT EMPTY POCKETS
TO MICROPROCESSOR INPUTS
AMTA4-8
SC8
WCX-9
B
SEE W9CBW3NC LINE 02
TO MICROPROCESSOR INPUTS
AMTA4-18
HAS
1
SA 01
CRC BS
7
1A1
CLOSES TO CIRCUIT BREAKER
TO MICROPROCESSOR INPUTS
AMTA4-5
HAT
4
SB 09
CRNS8
7
1B3
CLOSES TO SAY DON'T TARE
SEE W9CBW3NB LINE 06
A
2G
SEE W9CBW3LB LINE 17
WCCW08
KAZ
CRNS8
CONWA IN MOTION
1B3
SEE W9CBW3WA LINE 06
A
2F
00
01
02
03
04
05
06
07
08
09
10
W9CBW3SB
2021025B

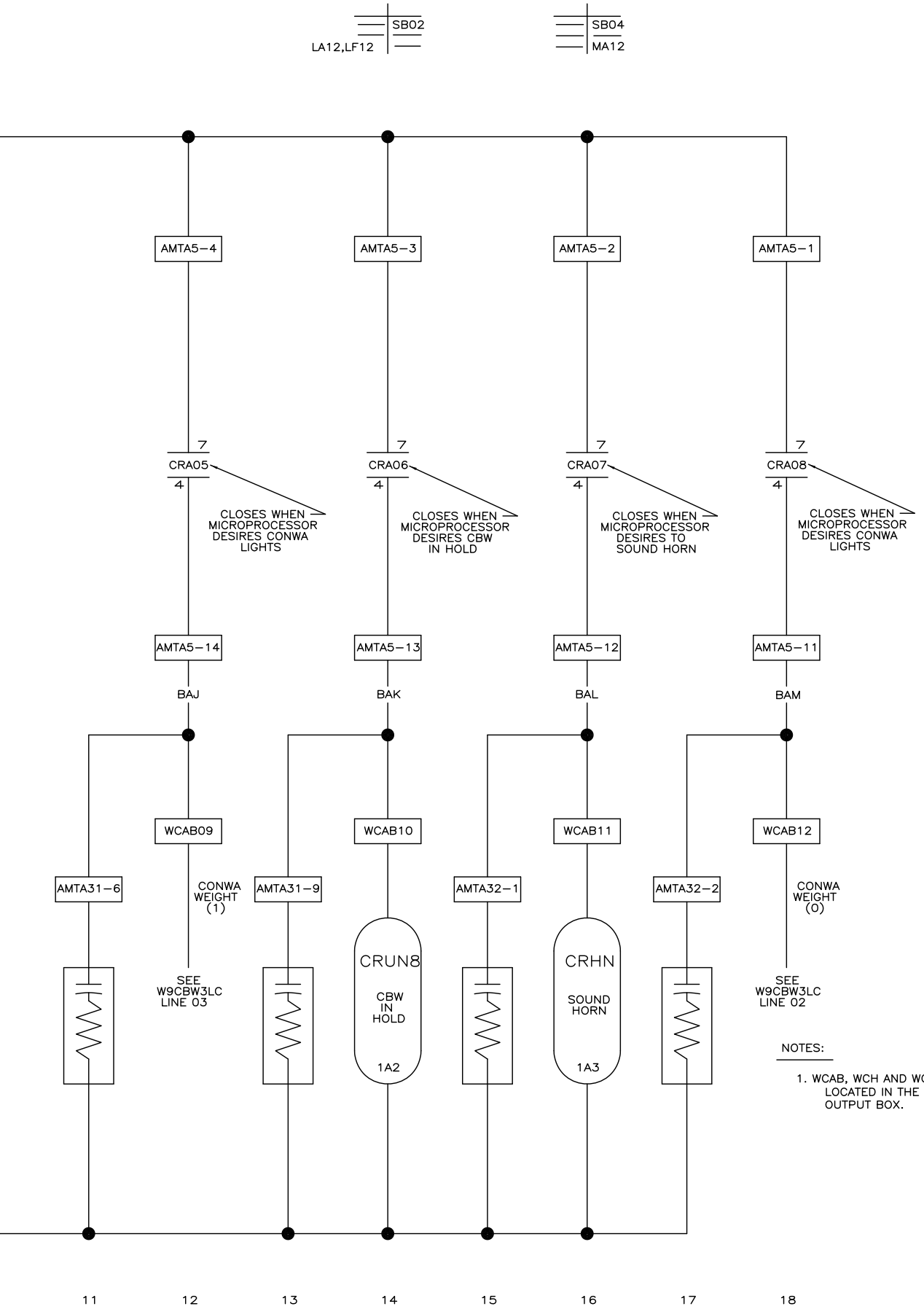

NOTES:

1. WCAB, WCH AND WCCW ARE LOCATED IN THE STANDARD OUTPUT BOX.

W9CBW3SB

G3 CBW SYSTEMS: MARK 9
SCHEMATIC: STANDARD I/O: OUTPUT

PELLERIN MILNOR CORPORATION

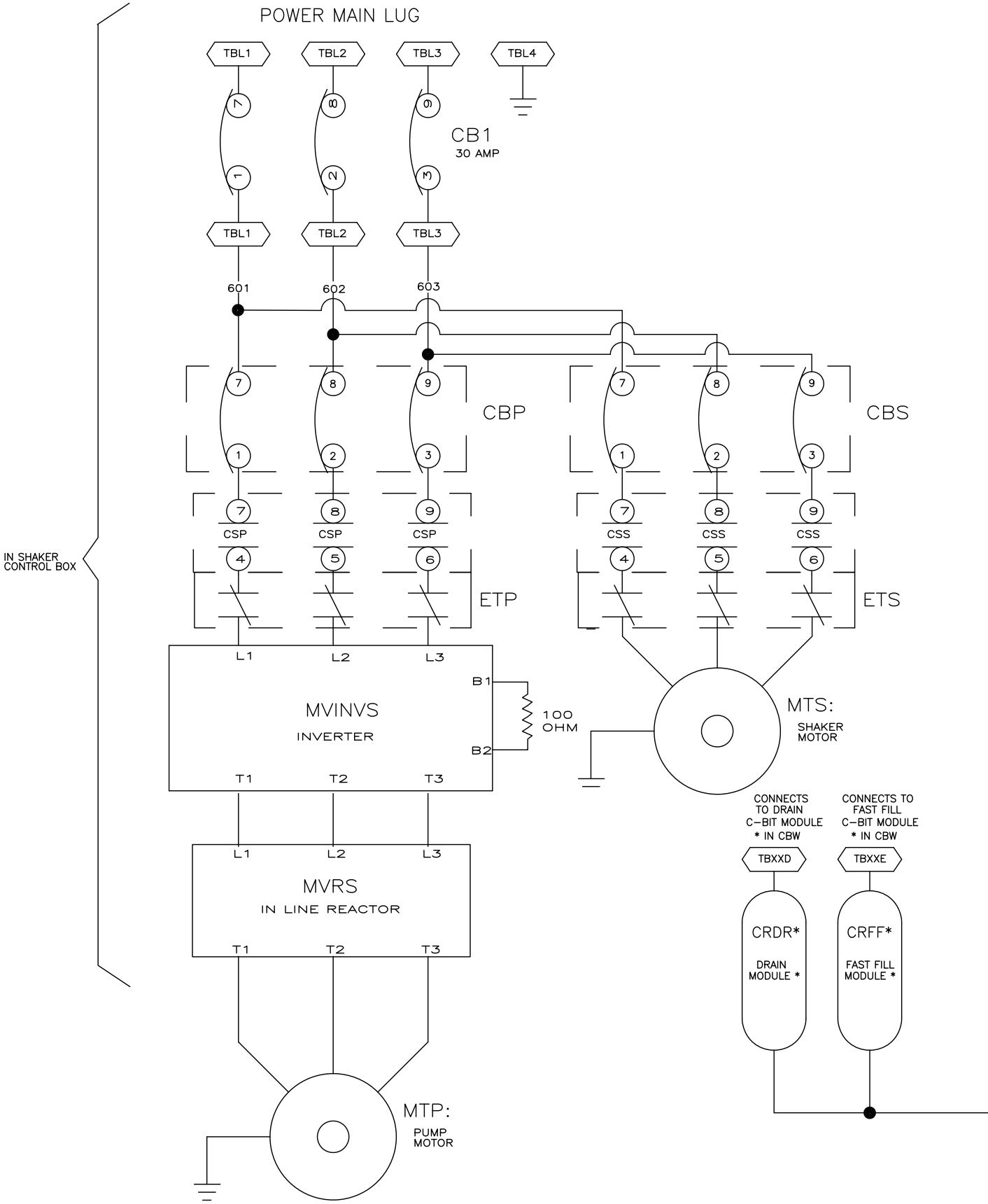

00 01 02 03 04 05 06 07 08 09 10

W9CBW3SC
2019033B

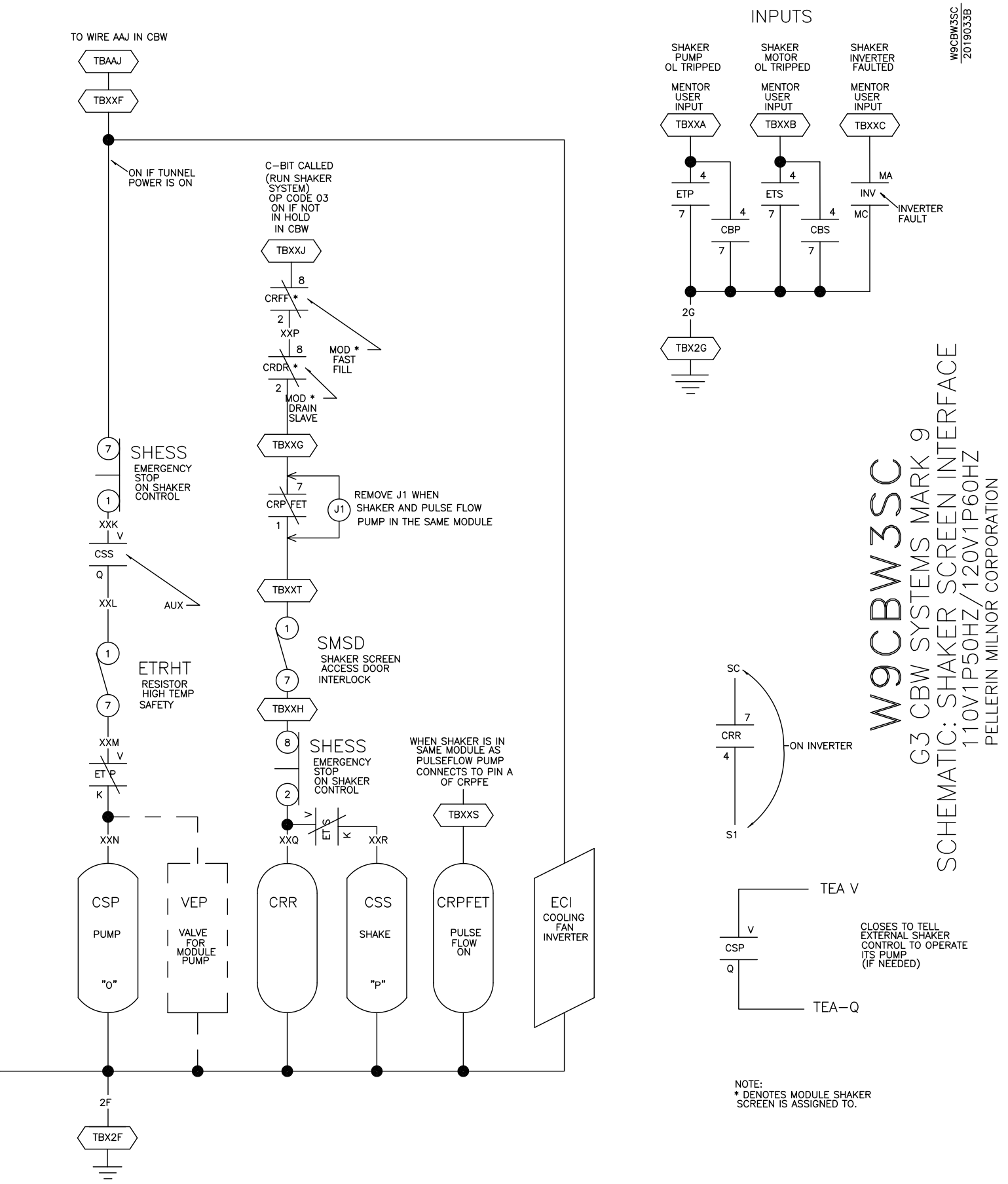
TO WIRE AAJ IN CBW
TBAAJ
TBXXF
ON IF TUNNEL POWER IS ON
C-BIT CALLED (RUN SHAKER SYSTEM) OP CODE 03 ON IF NOT IN HOLD IN CBW
TBXXJ
CRFF *
XXP
CRDR *
MOD * FAST FILL
MOD * DRAIN SLAVE
TBXXG
CRP FET
J1
REMOVE J1 WHEN SHAKER AND PULSE FLOW PUMP IN THE SAME MODULE
TBXXT
SMSD
SHAKER SCREEN ACCESS DOOR INTERLOCK
TBXXH
SHESS
EMERGENCY STOP ON SHAKER CONTROL
WHEN SHAKER IS IN SAME MODULE AS PULSEFLOW PUMP CONNECTS TO PIN A OF CRPFE
TBXXS
SHESS
EMERGENCY STOP ON SHAKER CONTROL
XXK
CSS
AUX
XXL
ETRHT
RESISTOR HIGH TEMP SAFETY
XXM
ETP
XXN
XXQ
ETS
XXR
CSP
PUMP
"O"
VEP
VALVE FOR MODULE PUMP
CRR
CSS
SHAKE
"P"
CRPFET
PULSE FLOW ON
ECI
COOLING FAN INVERTER
2F
TBX2F
INPUTS
SHAKER PUMP OL TRIPPED
SHAKER MOTOR OL TRIPPED
SHAKER INVERTER FAULTED
MENTOR USER INPUT
TBXXA
TBXXB
TBXXC
ETP
ETS
CBP
CBS
INV
MA
MC
INVERTER FAULT
2G
TBX2G
SC
CRR
ON INVERTER
S1
TEA V
CSP
TEA-Q
CLOSES TO TELL EXTERNAL SHAKER CONTROL TO OPERATE ITS PUMP (IF NEEDED)
NOTE:
* DENOTES MODULE SHAKER SCREEN IS ASSIGNED TO.
W9CBW3SC
G3 CBW SYSTEMS MARK 9
SCHEMATIC: SHAKER SCREEN INTERFACE
110V1P50HZ/120V1P60HZ
PELLERIN MILNOR CORPORATION
W9CBW3SC
2019033B
11
12
13
14
15
16
17
18
19

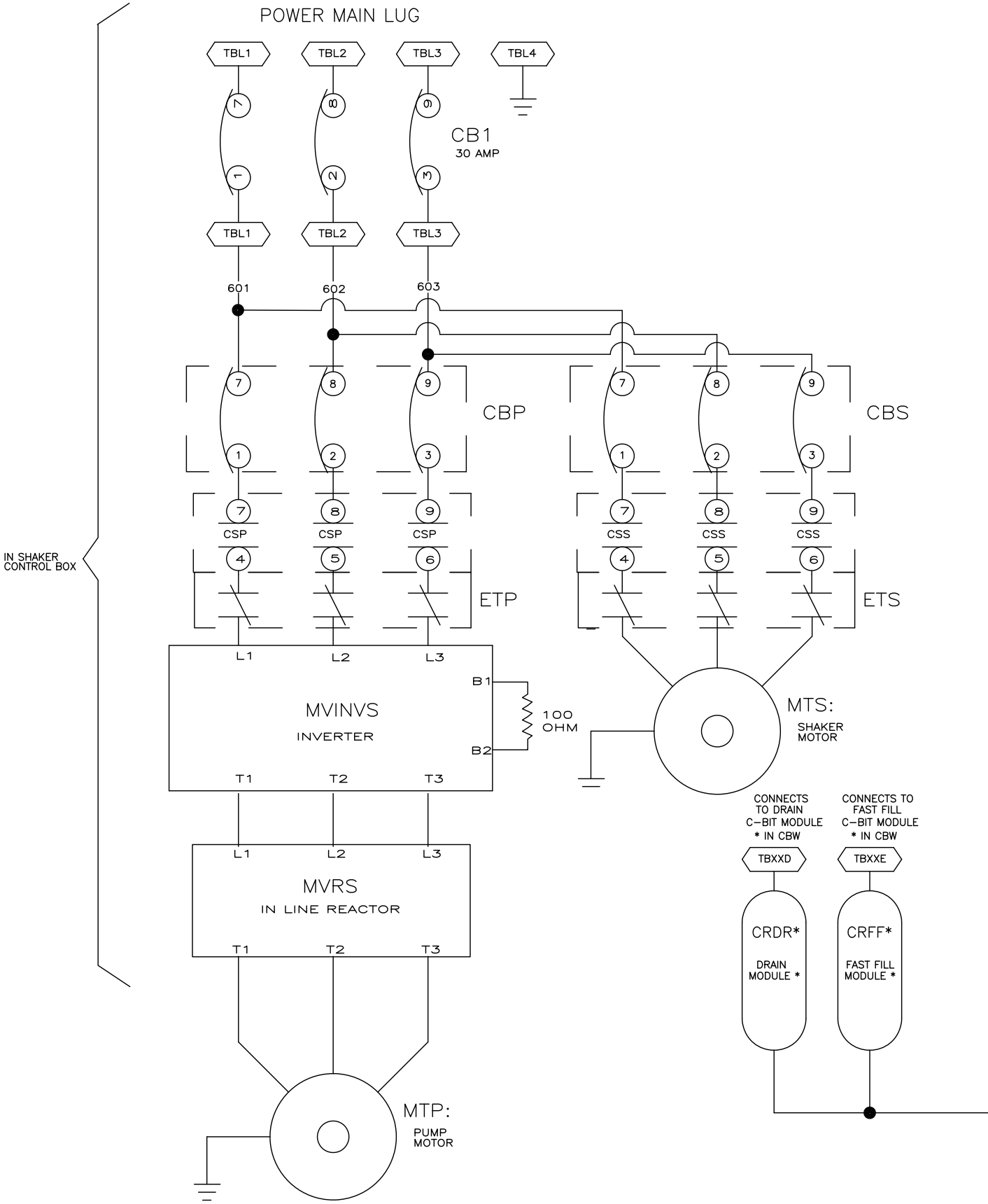

00 01 02 03 04 05 06 07 08 09 10

W9CBW3SCA
2019044B

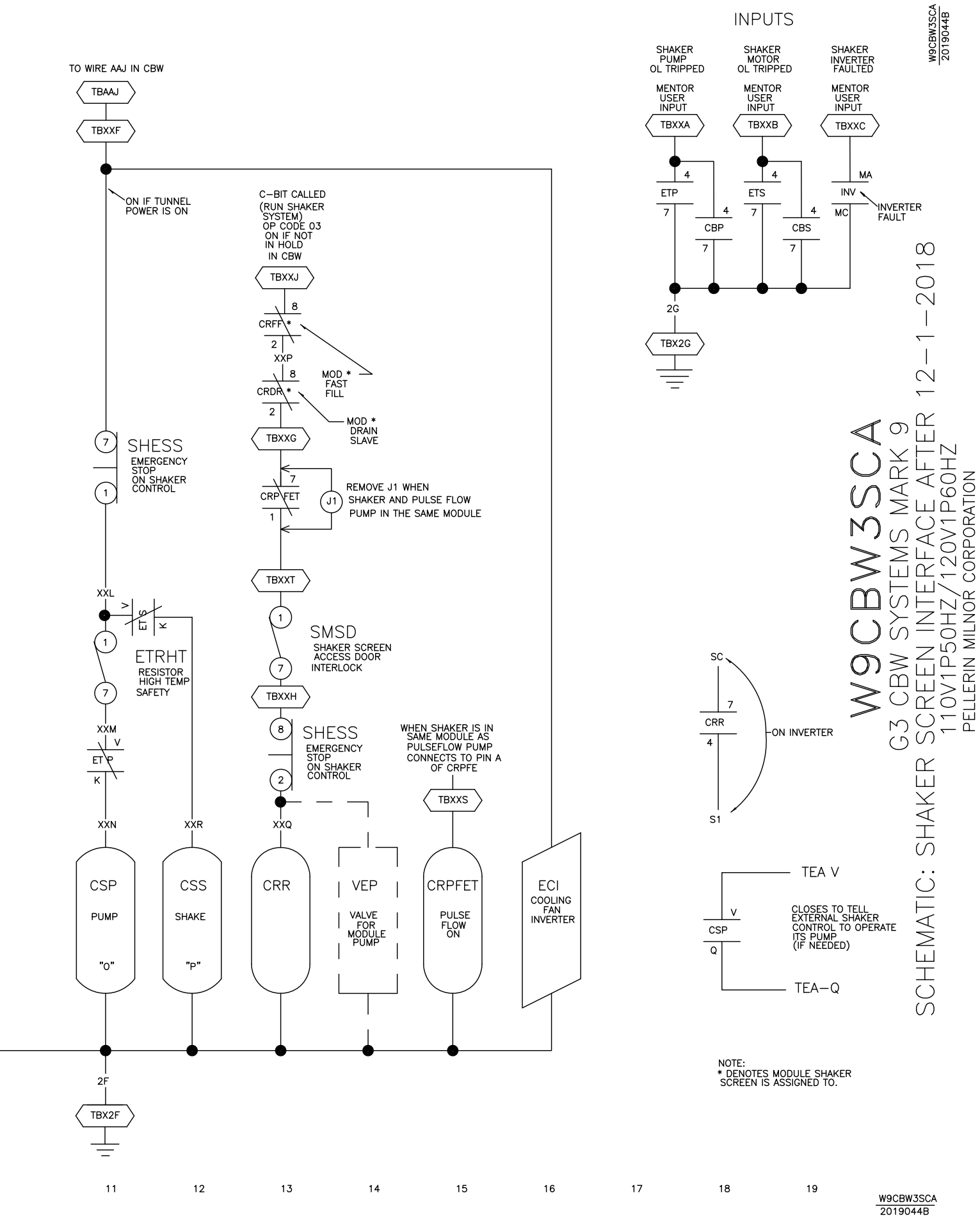
W9CBW3SCA
2019044B
INPUTS
SHAKER PUMP OL TRIPPED
SHAKER MOTOR OL TRIPPED
SHAKER INVERTER FAULTED
MENTOR USER INPUT
TBXXA
TBXXB
TBXXC
ETP
ETS
CBP
CBS
MA
INV
MC
INVERTER FAULT
2G
TBX2G
TO WIRE AAJ IN CBW
TBAAJ
TBXXF
ON IF TUNNEL POWER IS ON
C-BIT CALLED (RUN SHAKER SYSTEM) OP CODE 03 ON IF NOT IN HOLD IN CBW
TBXXJ
CRFF *
XXP
CRDF *
MOD * FAST FILL
MOD * DRAIN SLAVE
TBXXG
SHESS
EMERGENCY STOP ON SHAKER CONTROL
CRP FET
J1
REMOVE J1 WHEN SHAKER AND PULSE FLOW PUMP IN THE SAME MODULE
TBXXT
XXL
ETS
ETRHT
RESISTOR HIGH TEMP SAFETY
SMSD
SHAKER SCREEN ACCESS DOOR INTERLOCK
TBXXH
XXM
ETP
SHESS
EMERGENCY STOP ON SHAKER CONTROL
WHEN SHAKER IS IN SAME MODULE AS PULSEFLOW PUMP CONNECTS TO PIN A OF CRPFE
TBXXS
XXN
XXR
XXQ
CSP
PUMP
"O"
CSS
SHAKE
"P"
CRR
VEP
VALVE FOR MODULE PUMP
CRPFET
PULSE FLOW ON
ECI
COOLING FAN INVERTER
2F
TBX2F
SC
CRR
ON INVERTER
S1
TEA V
CSP
CLOSES TO TELL EXTERNAL SHAKER CONTROL TO OPERATE ITS PUMP (IF NEEDED)
TEA-Q
NOTE:
* DENOTES MODULE SHAKER SCREEN IS ASSIGNED TO.
W9CBW3SCA
G3 CBW SYSTEMS MARK 9
110V1P50HZ/120V1P60HZ
PELLERIN MILNOR CORPORATION
SCHEMATIC: SHAKER SCREEN INTERFACE AFTER 12-1-2018
11
12
13
14
15
16
17
18
19
W9CBW3SCA
2019044B

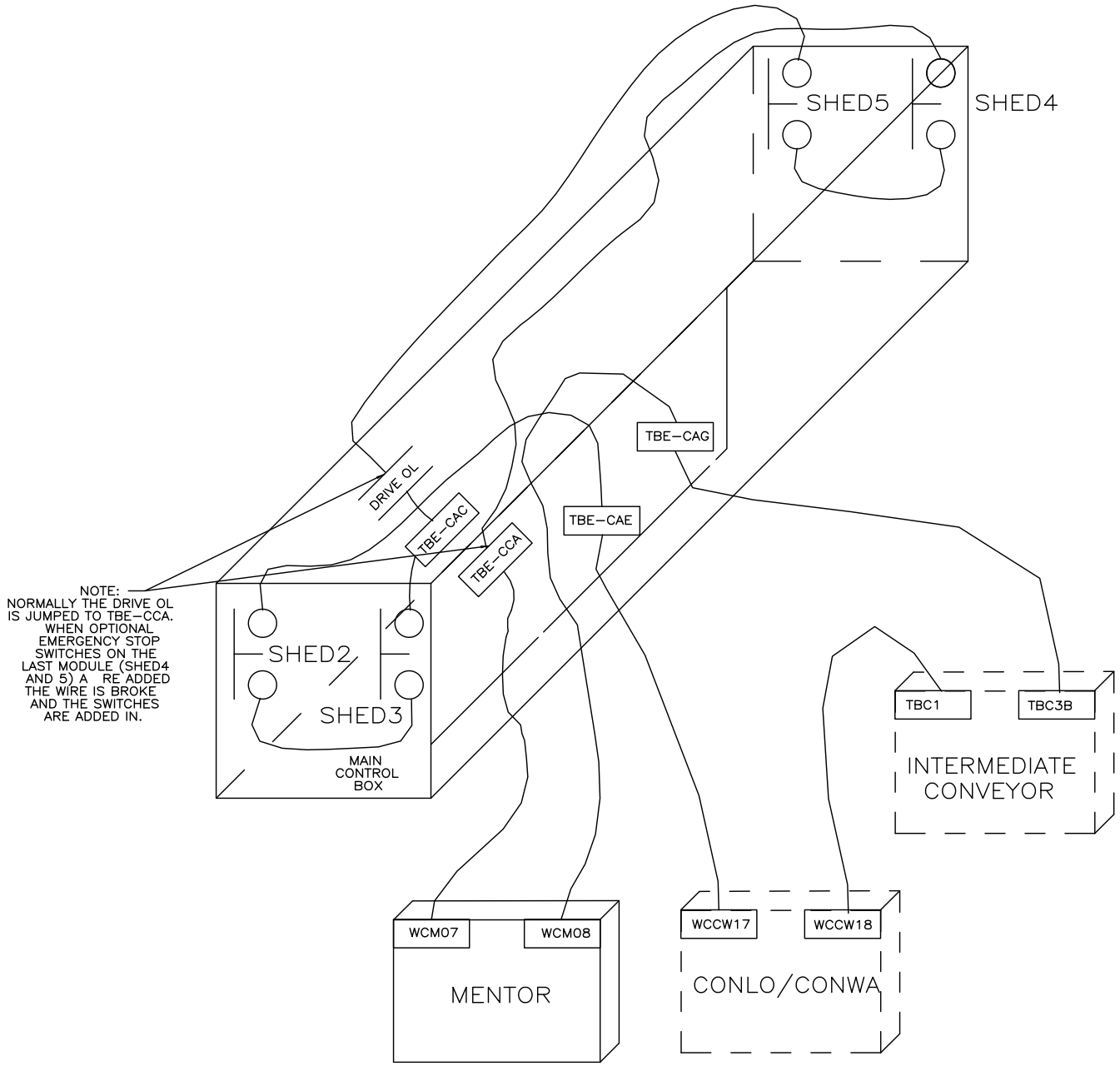

00 01 02 03 04 05 06 07 08 09

W9CBW3SD
2019384B

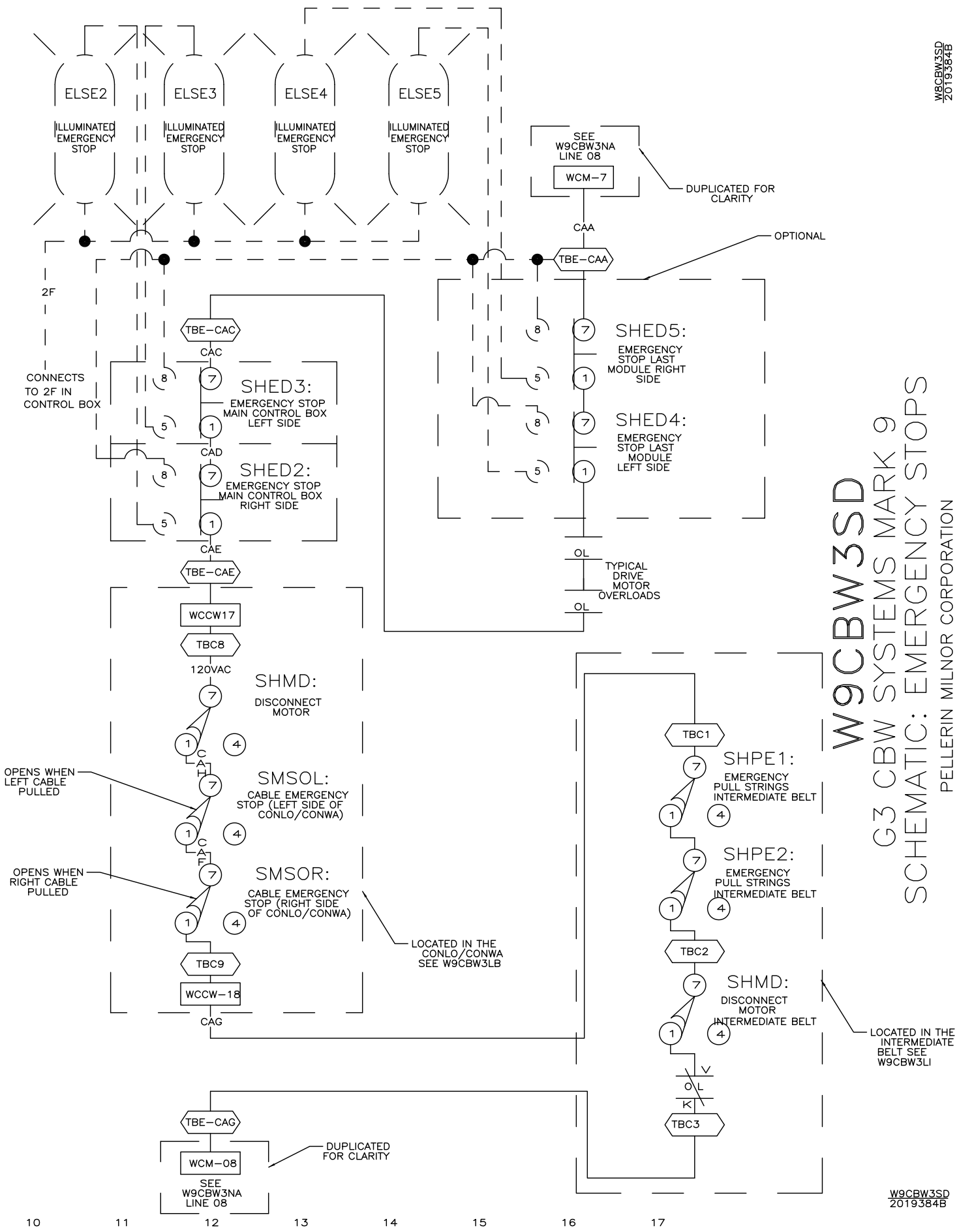
W8CBW3SD
2019384B
ELSE2
ELSE3
ELSE4
ELSE5
ILLUMINATED EMERGENCY STOP
SEE W9CBW3NA LINE 08
WCM-7
DUPLICATED FOR CLARITY
CAA
OPTIONAL
TBE-CAA
2F
CONNECTS TO 2F IN CONTROL BOX
TBE-CAC
CAC
SHED3:
EMERGENCY STOP MAIN CONTROL BOX LEFT SIDE
CAD
SHED2:
EMERGENCY STOP MAIN CONTROL BOX RIGHT SIDE
CAE
TBE-CAE
SHED5:
EMERGENCY STOP LAST MODULE RIGHT SIDE
SHED4:
EMERGENCY STOP LAST MODULE LEFT SIDE
OL
TYPICAL DRIVE MOTOR OVERLOADS
WCCW17
TBC8
120VAC
SHMD:
DISCONNECT MOTOR
CAH
SMSOL:
CABLE EMERGENCY STOP (LEFT SIDE OF CONLO/CONWA)
OPENS WHEN LEFT CABLE PULLED
CAF
SMSOR:
CABLE EMERGENCY STOP (RIGHT SIDE OF CONLO/CONWA)
OPENS WHEN RIGHT CABLE PULLED
LOCATED IN THE CONLO/CONWA SEE W9CBW3LB
TBC9
WCCW-18
CAG
TBC1
SHPE1:
EMERGENCY PULL STRINGS INTERMEDIATE BELT
SHPE2:
EMERGENCY PULL STRINGS INTERMEDIATE BELT
TBC2
SHMD:
DISCONNECT MOTOR INTERMEDIATE BELT
LOCATED IN THE INTERMEDIATE BELT SEE W9CBW3LI
V
OL
K
TBC3
TBE-CAG
WCM-08
DUPLICATED FOR CLARITY
SEE W9CBW3NA LINE 08
W9CBW3SD
G3 CBW SYSTEMS MARK 9
SCHEMATIC: EMERGENCY STOPS
PELLERIN MILNOR CORPORATION
W9CBW3SD
2019384B
10
11
12
13
14
15
16
17

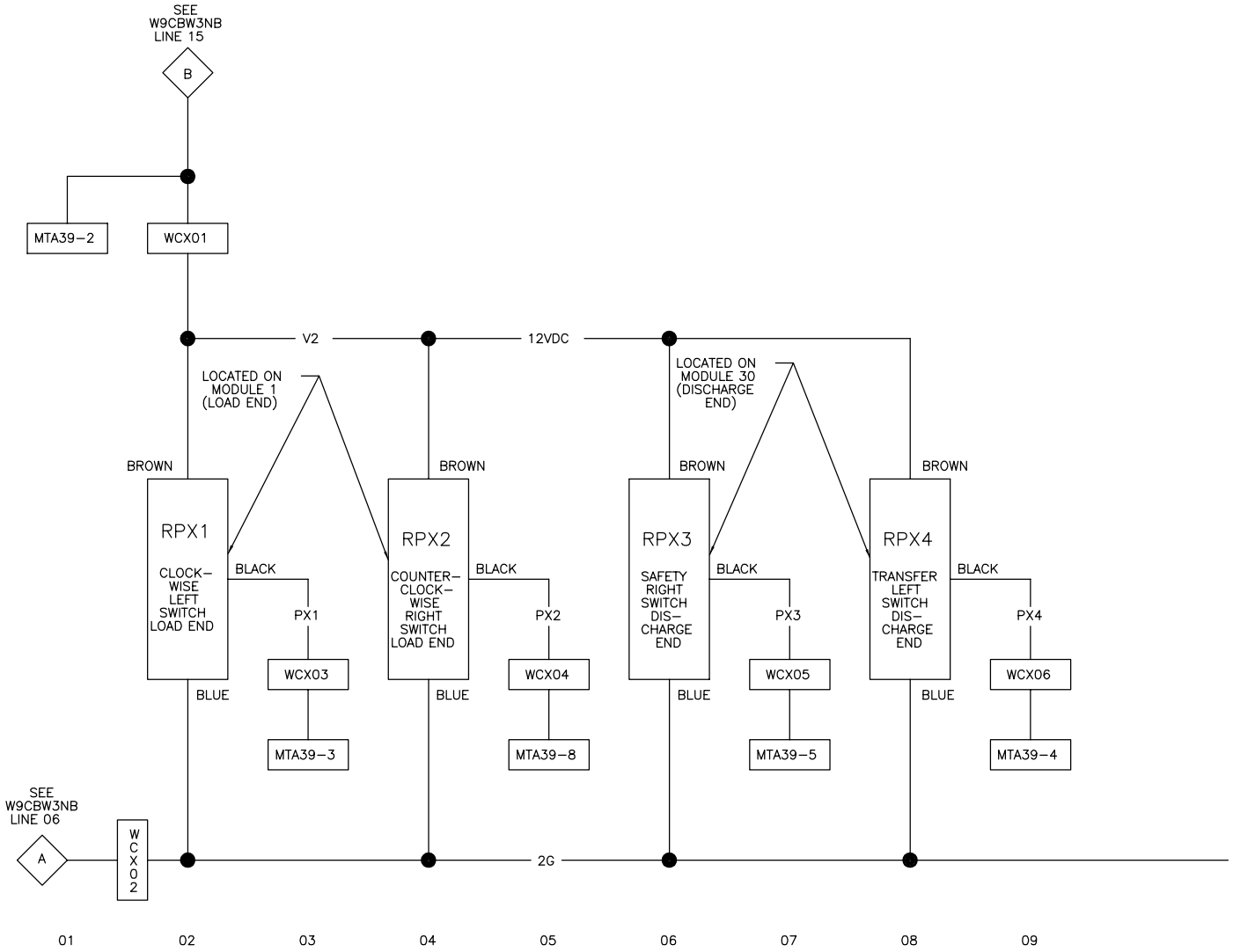

W9CBW3SE
2009196B

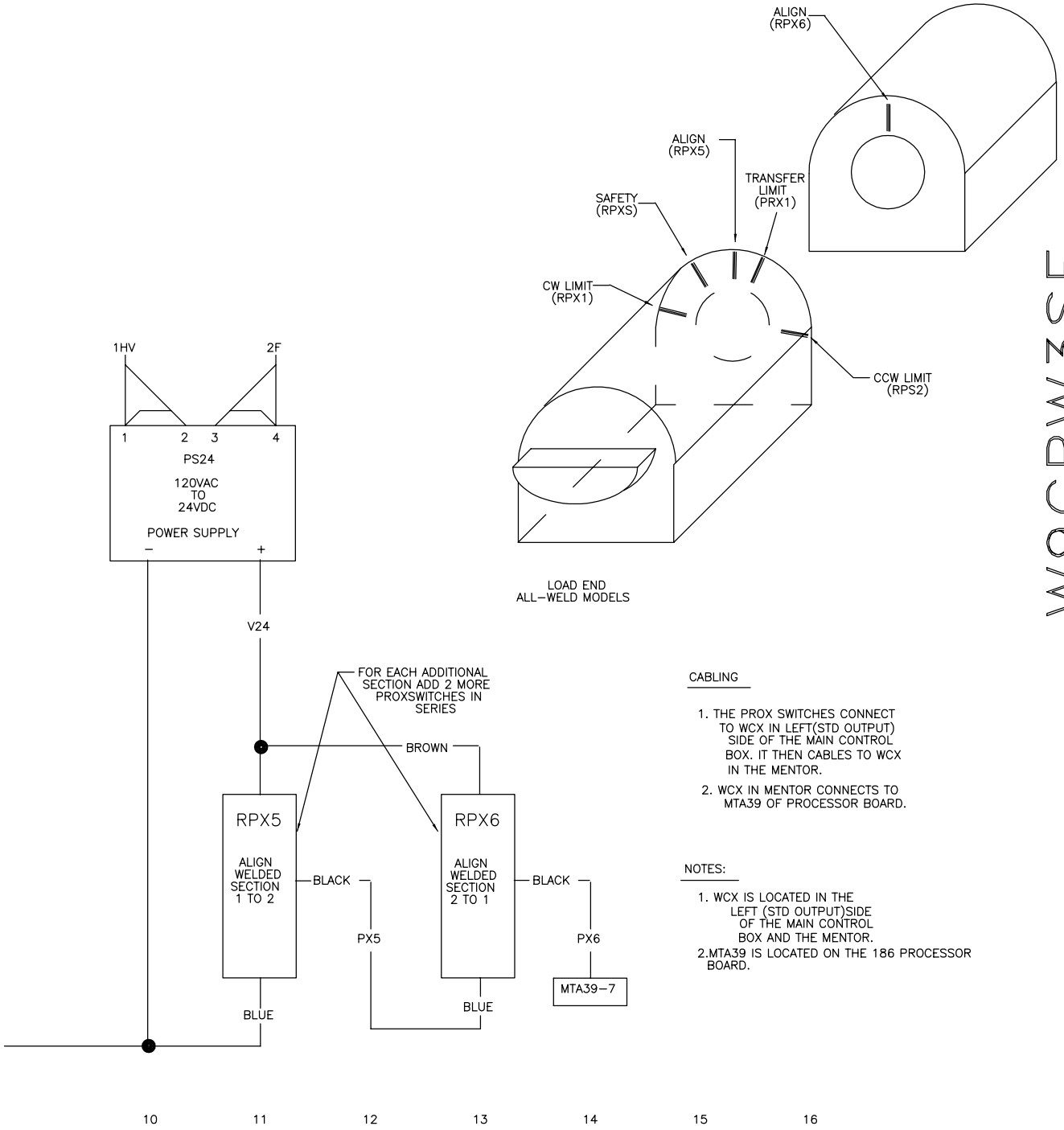

W9CBW3SE

G3 CBW SYSTEMS: MARK 9
SCHEMATIC: PROXIMITY SWITHCES

PELLERIN MILNOR CORPORATION

CABLING

1. THE PROX SWITCHES CONNECT TO WCX IN LEFT(STD OUTPUT) SIDE OF THE MAIN CONTROL BOX. IT THEN CABLES TO WCX IN THE MENTOR.
2. WCX IN MENTOR CONNECTS TO MTA39 OF PROCESSOR BOARD.

NOTES:

1. WCX IS LOCATED IN THE LEFT (STD OUTPUT)SIDE OF THE MAIN CONTROL BOX AND THE MENTOR.
2. MTA39 IS LOCATED ON THE 186 PROCESSOR BOARD.

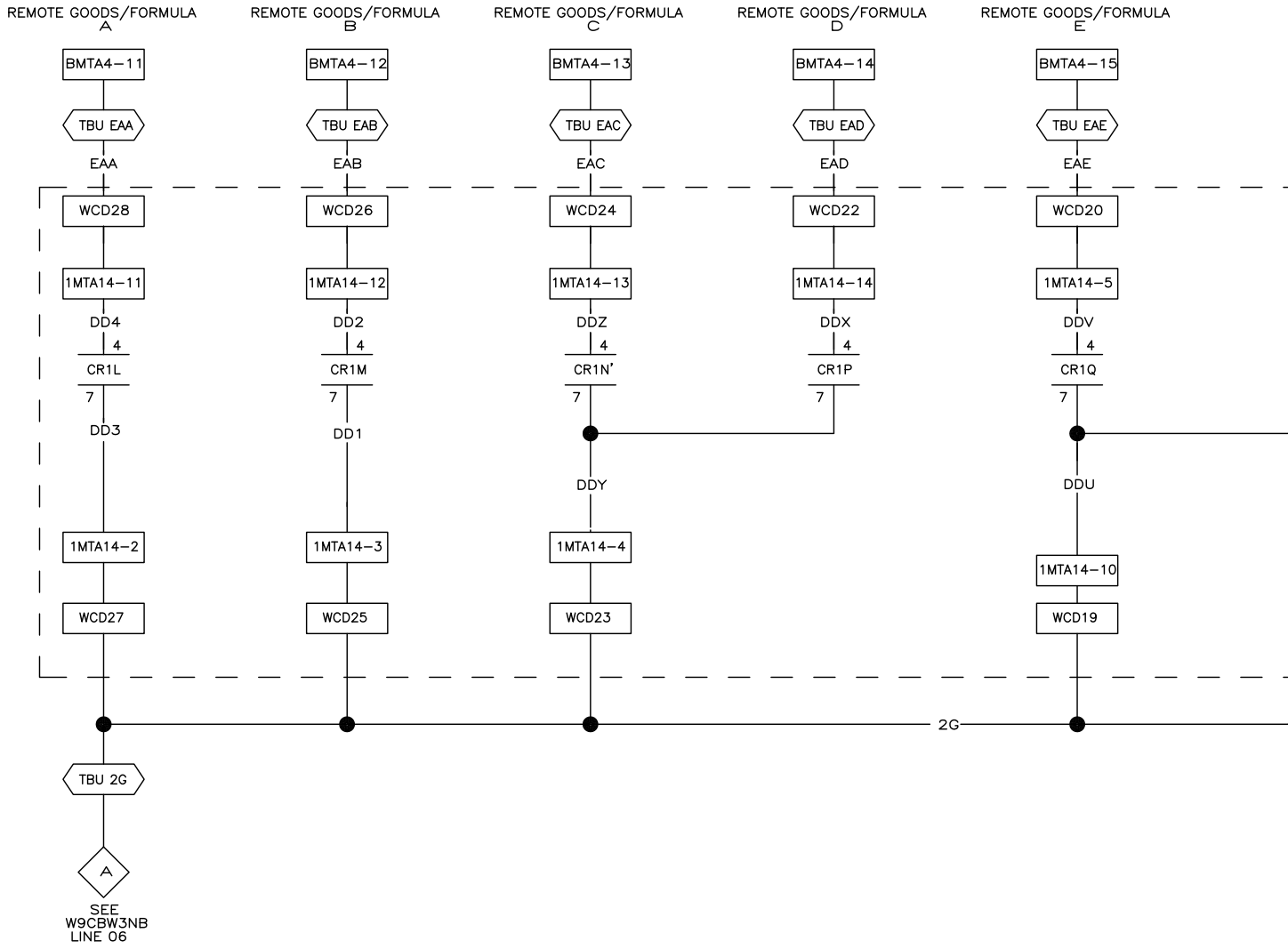

00 01 02 03 04 05 06 07 08 09

W9CBW3SF
2016113B

DATA IS ACCEPTED IN BINARY
0 = UNGROUNDED
1 = GROUNDED

H G F E D C B A
0 0 0 0 0 0 0 0 = 000 GOODS/FORMULA
0 0 0 0 0 0 0 1 = 001 GOODS/FORMULA
ETC...
0 0 0 0 1 0 0 0 = 008 GOODS/FORMULA
ETC...
1 1 1 1 1 1 1 1 = 255 GOODS/FORMULA

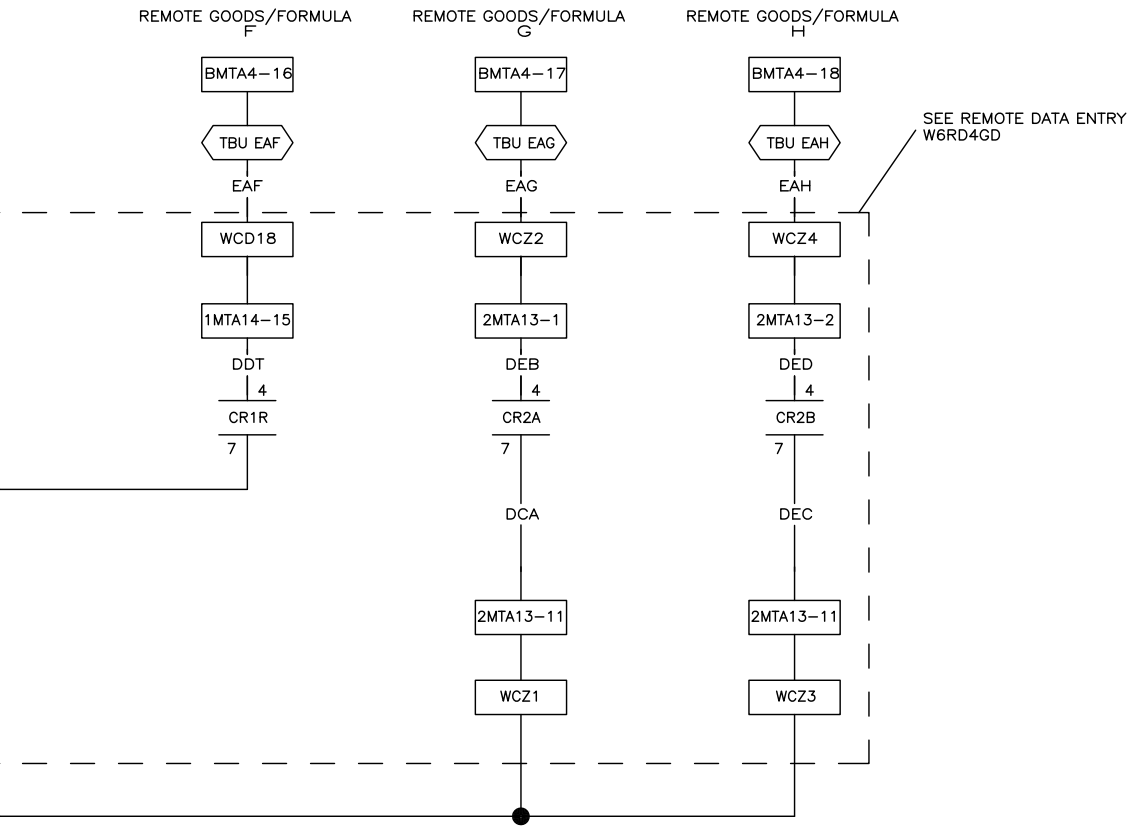

W9CBW3SF

G3 CBW SYSTEMS MARK 9
SCHEMATIC: STANDARD I/O: REMOTE GOODS CLASS/FORMULA SELECTOR

PELLERIN MILNOR CORPORATION

10 11 12 13 14 15 16 17 18

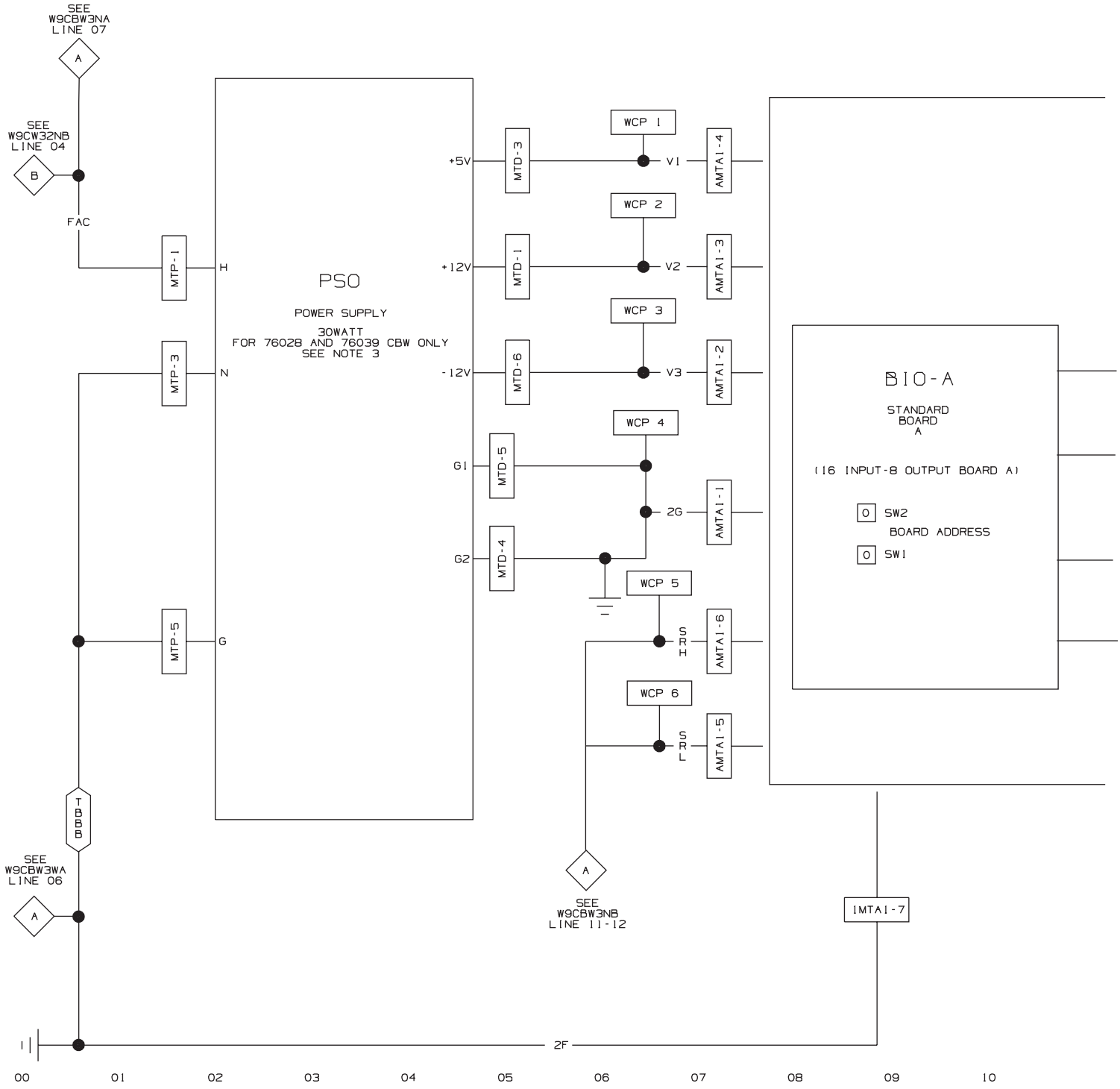

W9CBW3SG
99286B

WIRE NO.	VOLTAGE	WIRE COLOR
V1	+5VDC	BLUE
V2	+12VDC	BLUE/ORANGE
V3	-12VDC	BLUE/BLACK
2G	GROUND	BLUE/WHITE
SRH	SERIAL HIGH	BLUE/RED
SRL	SERIAL LOW	BLACK/BLUE
INPUTS	-	BLUE/BLACK
-	24VAC	BLUE/RED
-	120VAC	RED
2F	CONTROL GROUND	RED/WHITE

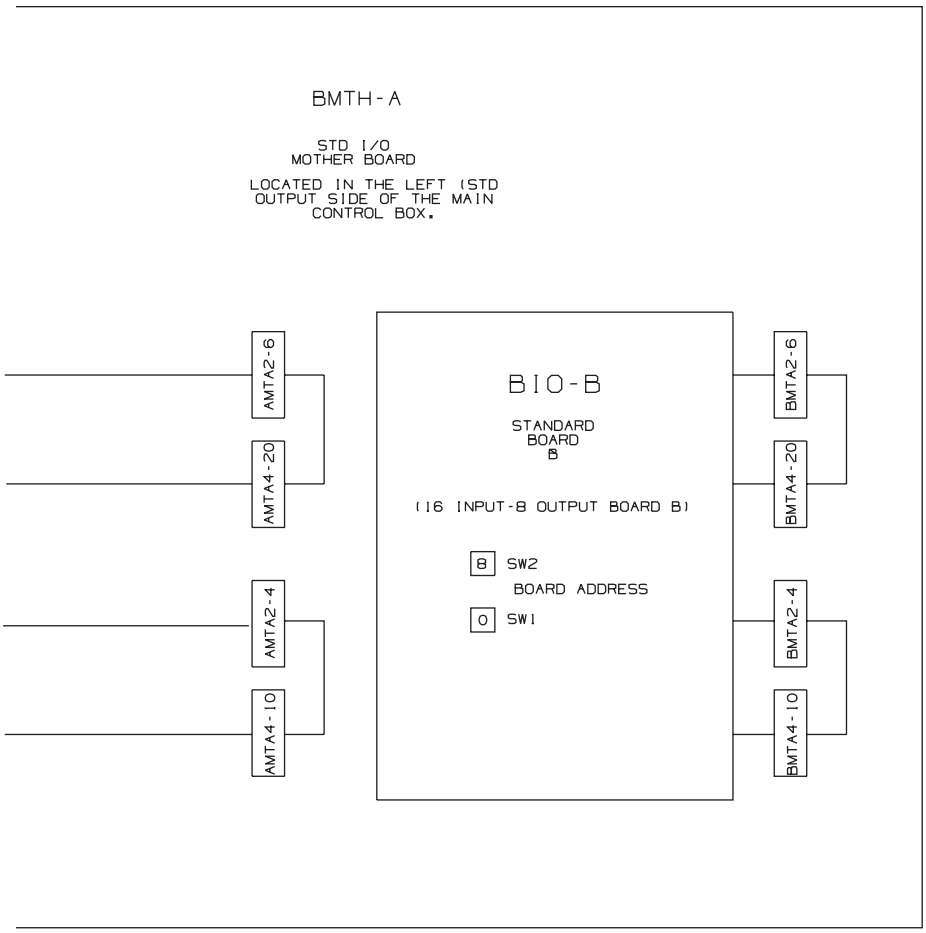

W9CBW3SG

SCHEMATIC: STANDARD I/O BOARD WIRING

PELLERIN MILNOR CORPORATION

NOTES:

1. WCP PROVIDES CONNECTIONS FOR ALL D.C. POWER AND SERIAL LINK.
2. WCM IS LOCATED IN THE MENTOR.

11 12 13 14 15 16 17

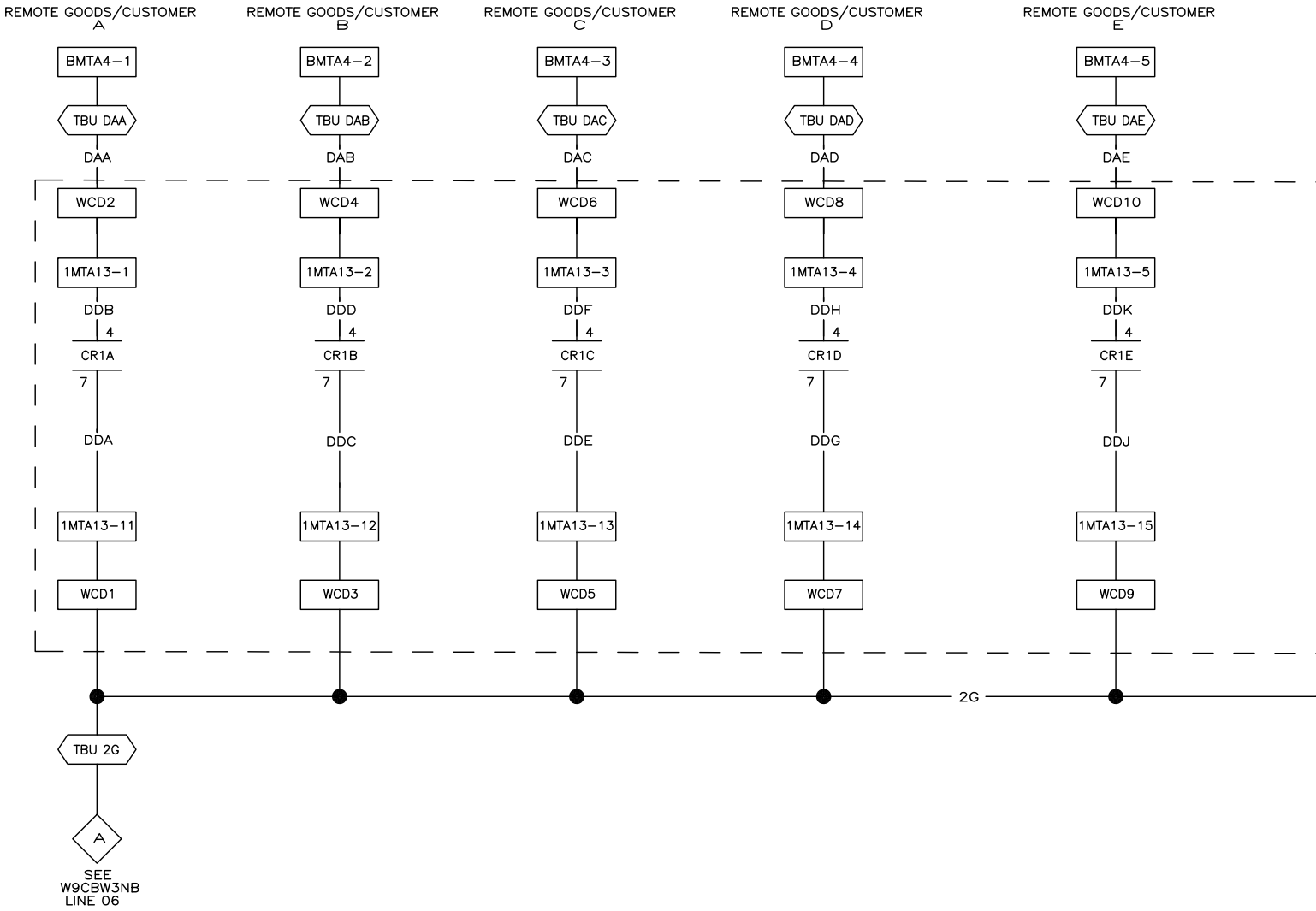

00 01 02 03 04 05 06 07 08 09

W9CBW3SH
2019136B

W9CBW3SH
2019136B

DATA IS ACCEPTED IN BINARY
0 = UNGROUNDED
1 = GROUNDED

K J H G F E D C B A
0 0 0 0 0 0 0 0 0 0 = 000 CUSTOMER
0 0 0 0 0 0 0 0 0 1 = 001 CUSTOMER
ETC....
0 0 0 0 0 0 1 0 0 0 = 008 CUSTOMER
0 1 0 0 0 0 0 0 0 0 = 256 CUSTOMER
0 0 1 1 1 1 1 1 1 1 = 255 CUSTOMER
1 1 1 1 1 0 0 1 1 1 = 999 CUSTOMER

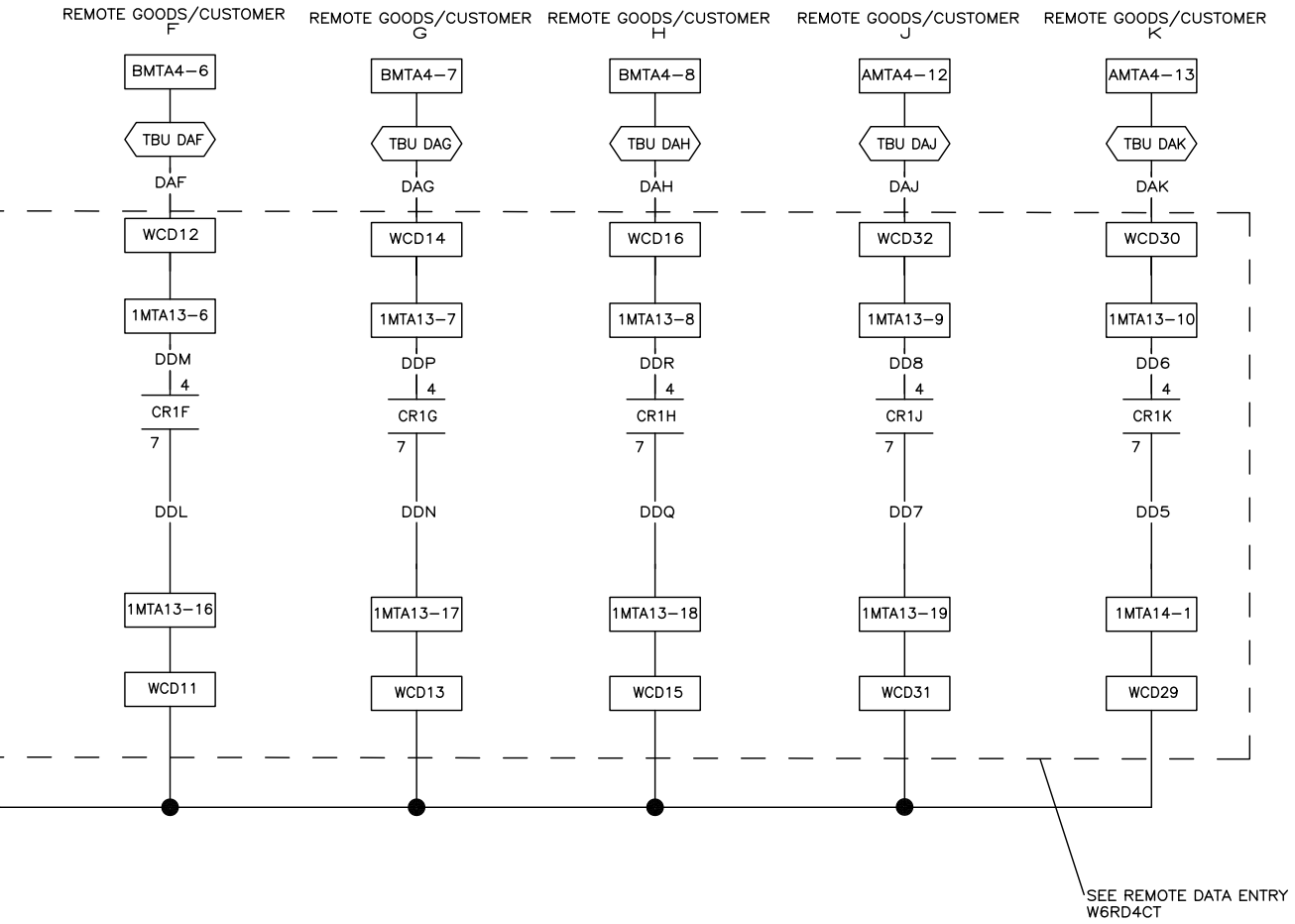

W9CBW3SH

G3 CBW SYSTEMS MARK 9

SCHEMATIC: REMOTE CUSTOMER SELECTOR

PELLERIN MILNOR CORPORATION

W9CBW3SH
2019136B

10 11 12 13 14 15 16 17 18

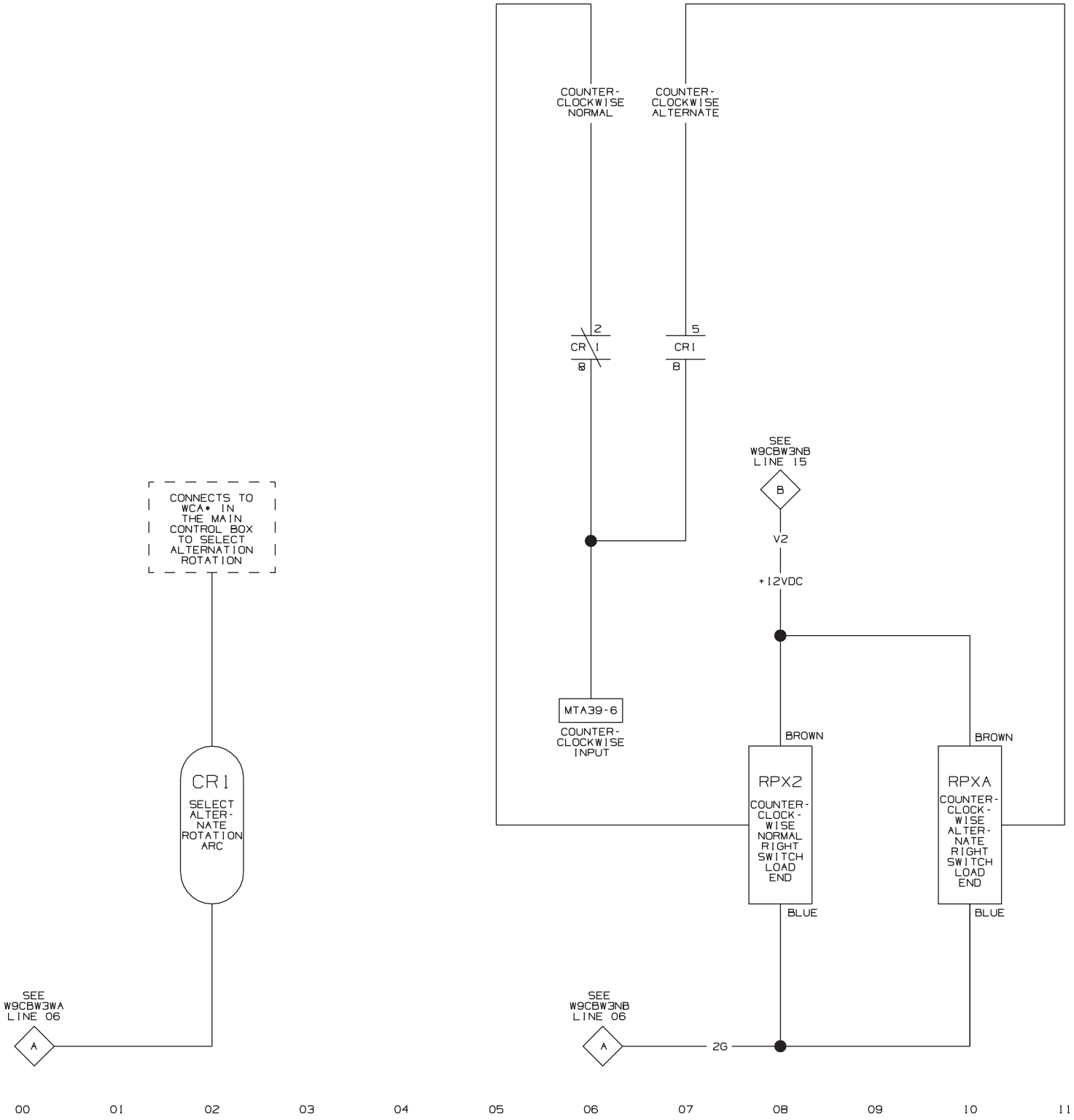

W9CBW3SJ
99193B

W9CBW3SJ

G3 CBW SYSTEMS MARK 9

SCHEMATIC: SELECTION OF 2 DIFFERENT ROTATION ARCS

PELLERIN MILNOR CORPORATION

12 13 14 15 16

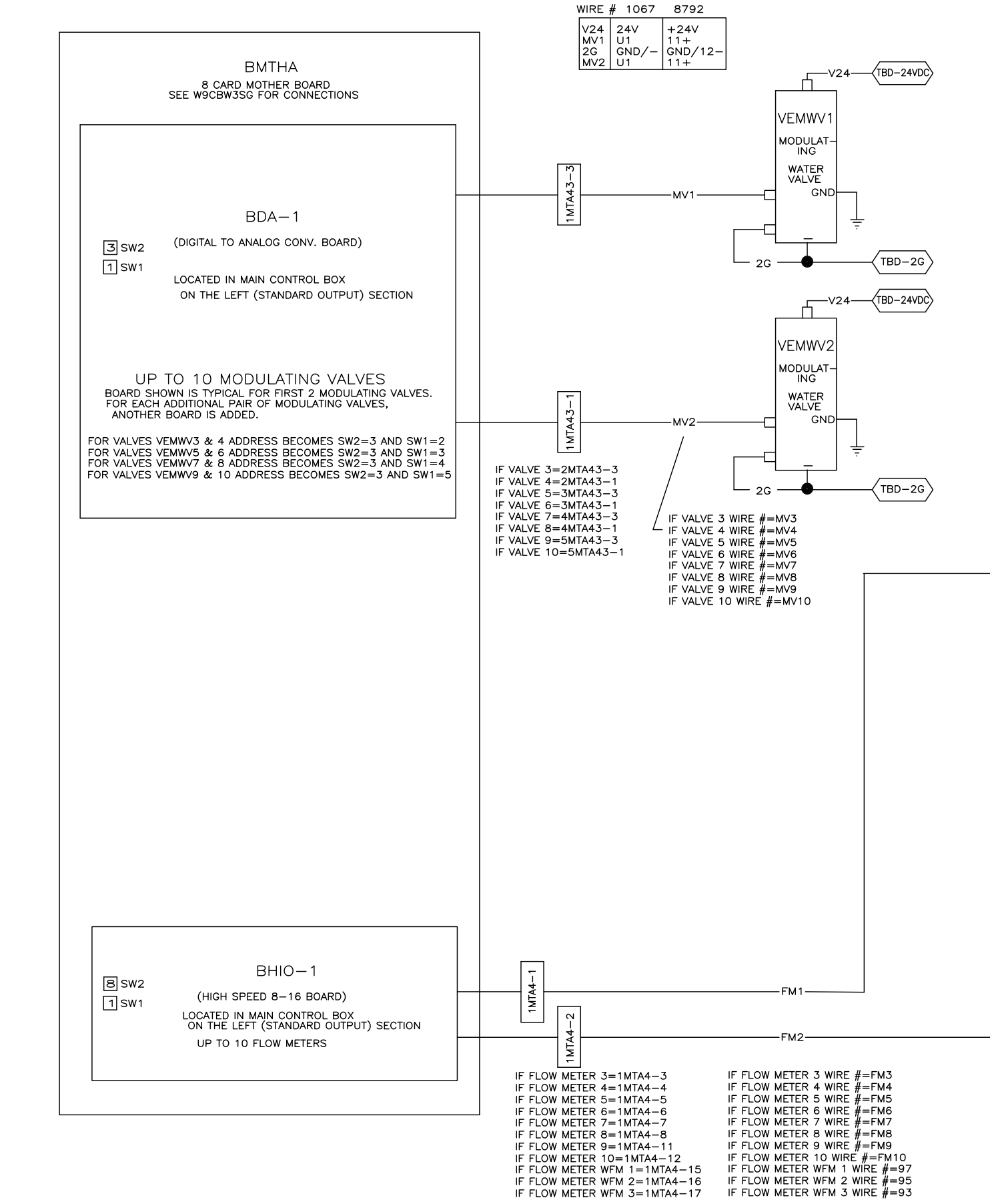

W9CBW3SK
2024453B

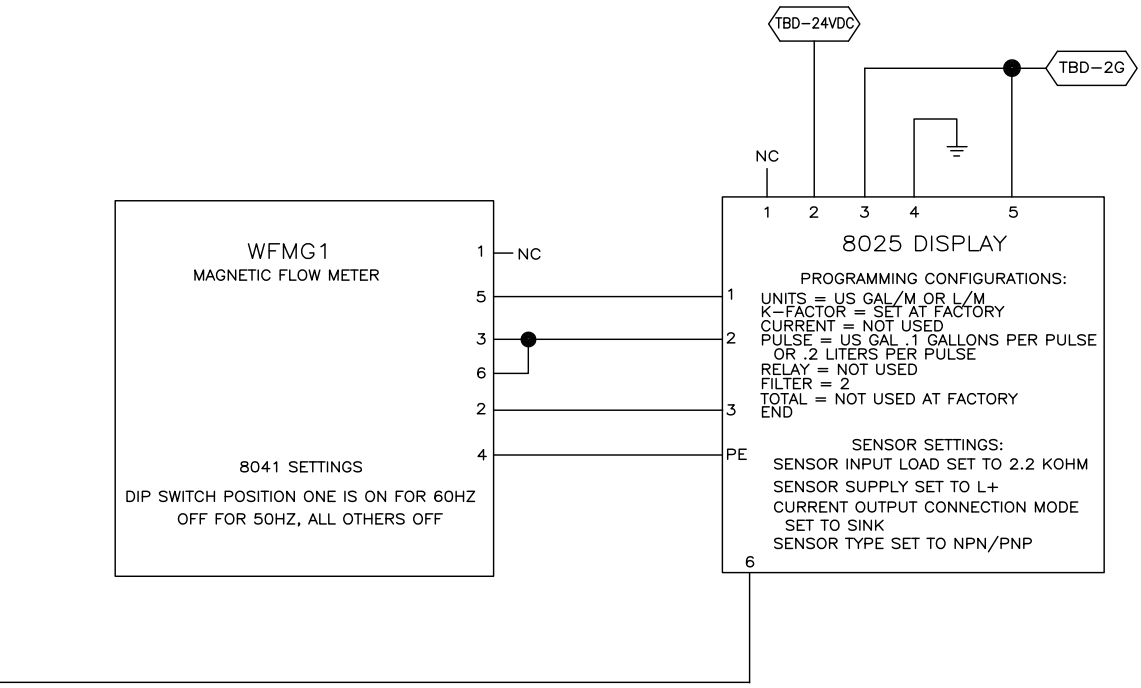

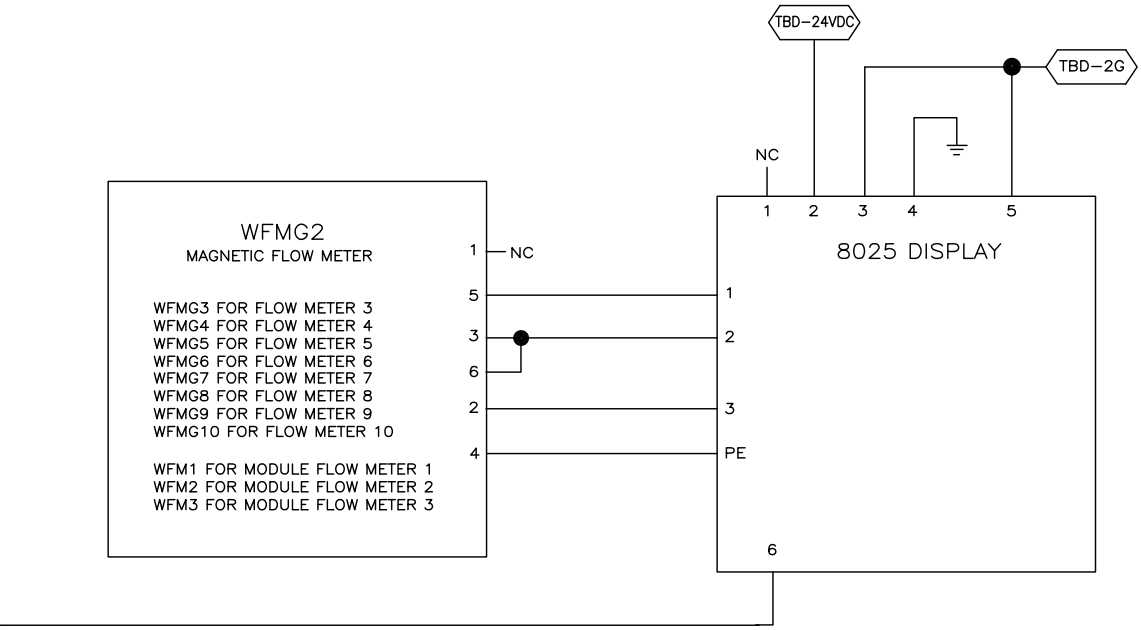

W9CBW3SK

G3 CBW SYSTEM
SCHEMATIC; MODULATING WATER VALVES WITH MAGNETIC FLOW METER

PELLERIN MILNOR CORPORATION

NOTES:

1. TBD IS LOCATED IN THE CENTER SECTION OF THE MAIN CBW CONTROL BOX
2. THE SOURCE OF THE 24VDC IS PS24. SEE SCHEMATIC W9CBW3SE.
3. THE NUMBER OF MODULATING VALVES AND FLOW METERS WILL DEPEND ON MACHINE CONFIGURATION.
4. FOR WFM 1–3: IF PADDLE WHEEL FLOW METERS ARE USED, SEE DRAWING W9CBW3JA. IF MAGNETIC FLOW METERS, USE THIS PAGE.

11 12 13 14 15 16 17 18

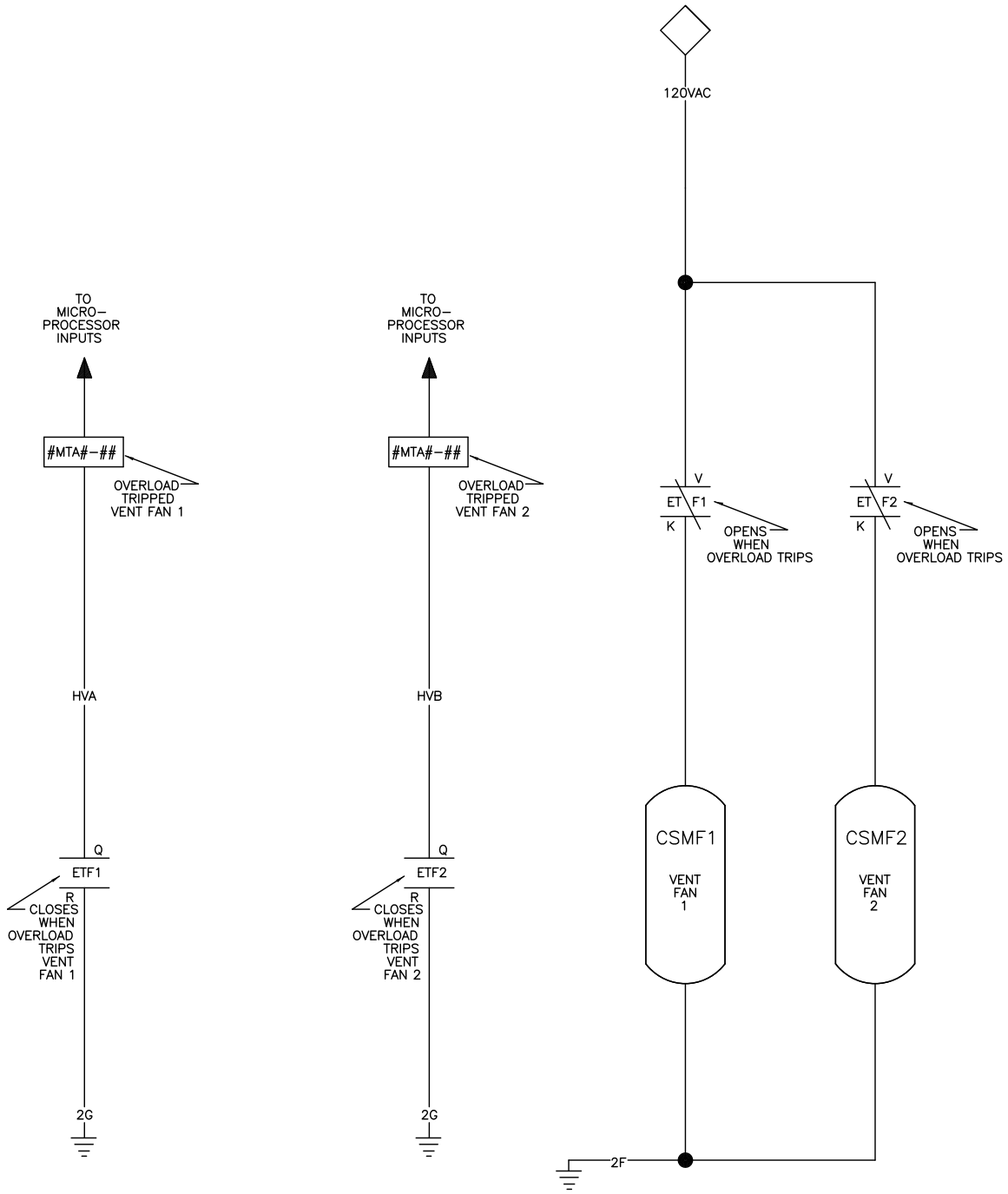

00 01 02 03 04 05 06 07 08 09 10

W9CBW3VF
2021183B

W9CBW3VF

G3 CBW SYSTEMS MARK 9
SCHEMATIC: CBW VENT FANS

PELLERIN MILNOR CORPORATION

W9CBW3VF
2021183B

W9CBW3VF
2021183B

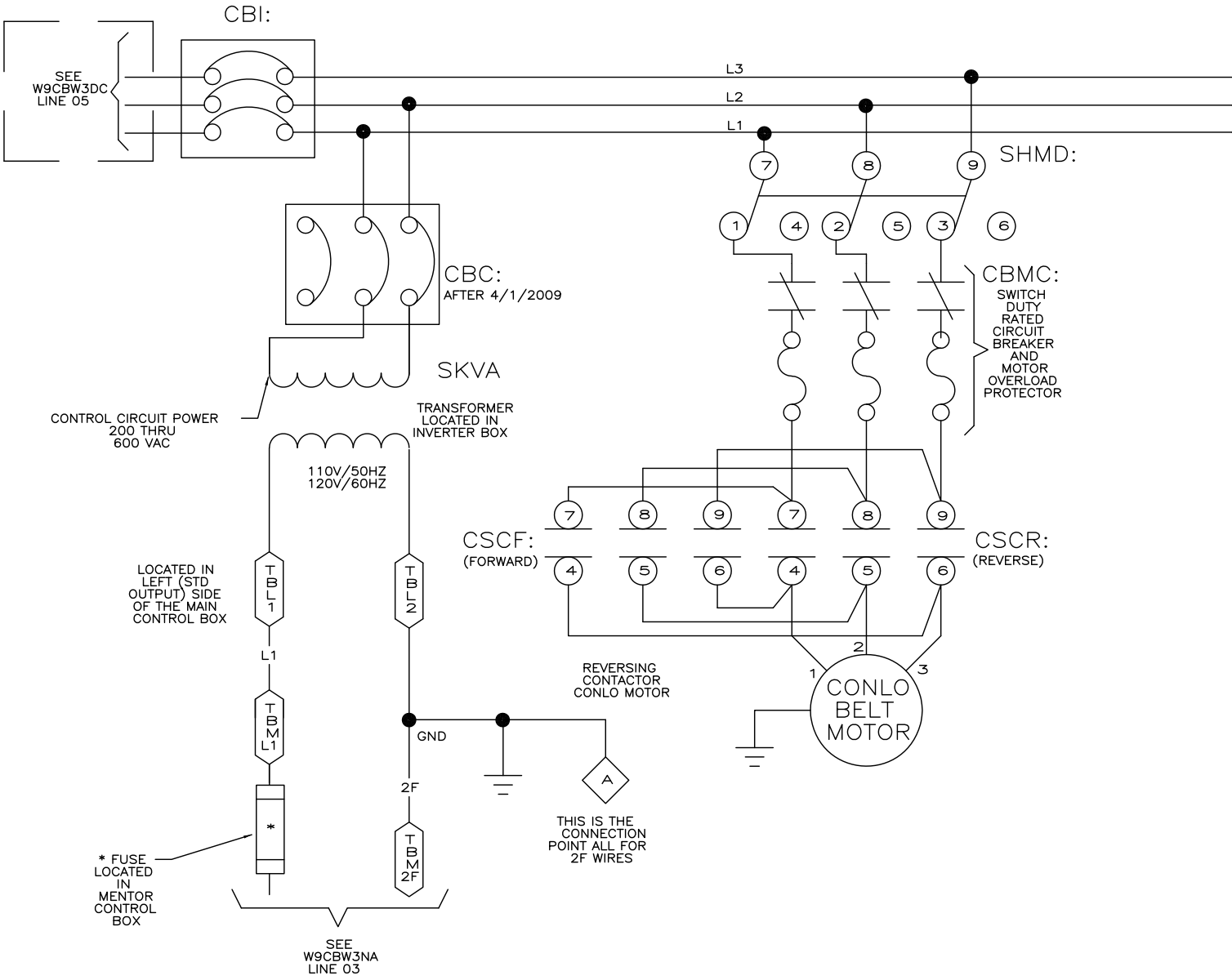

00 01 02 03 04 05 06 07 08 09

W9CBW3WA
2018195B

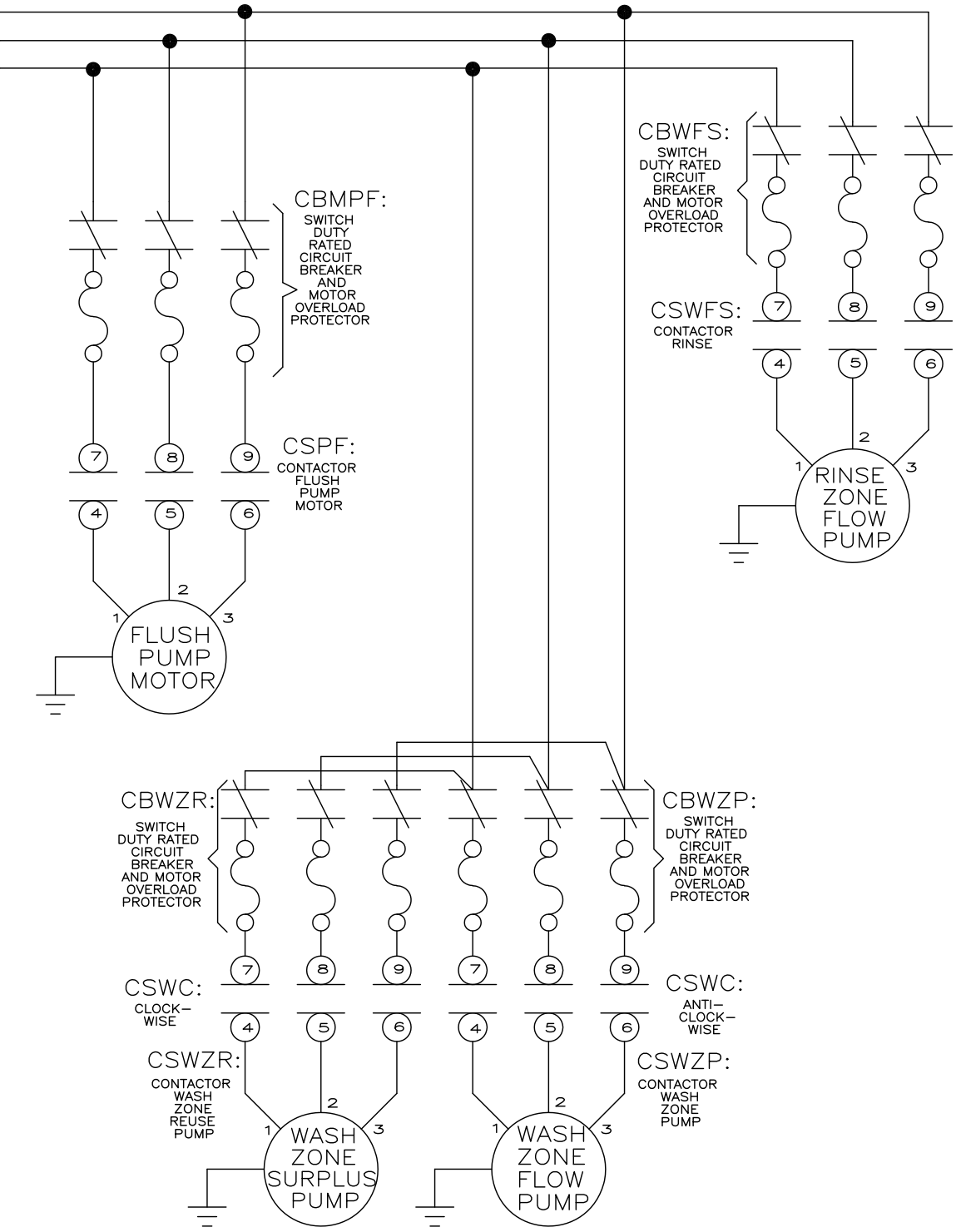

W9CBW3WA

CBW SYSTEM: MARK 9

SCHEMATIC: POWER DISTRIBUTION—NON PULSE FLOW

PELLERIN MILNOR CORPORATION

10 11 12 13 14 15 16 17 18 19

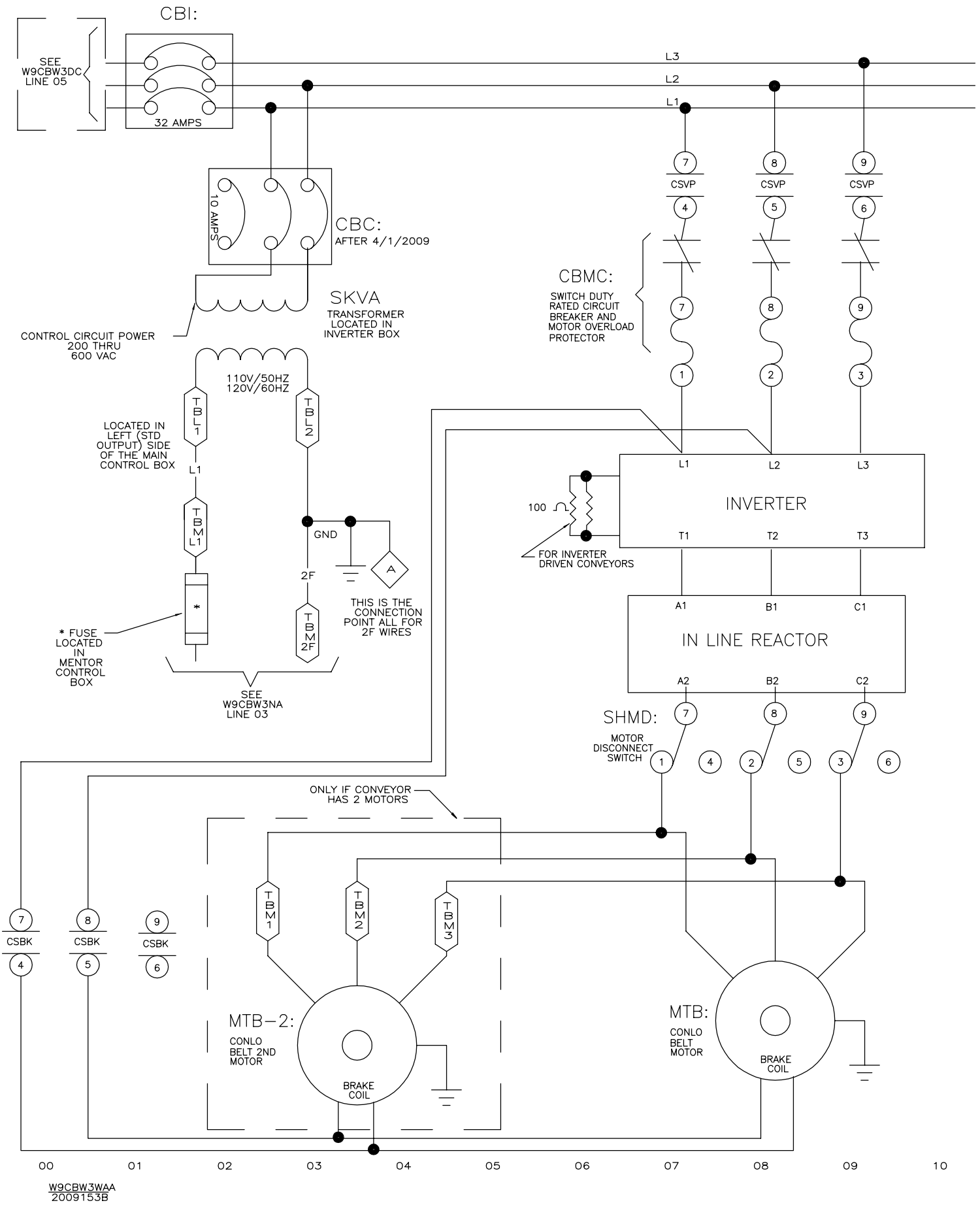
CBI:
SEE W9CBW3DC LINE 05
32 AMPS
L3
L2
L1
CSVP
CBC:
AFTER 4/1/2009
10 AMPS
SKVA
TRANSFORMER LOCATED IN INVERTER BOX
CONTROL CIRCUIT POWER 200 THRU 600 VAC
CBMC:
SWITCH DUTY RATED CIRCUIT BREAKER AND MOTOR OVERLOAD PROTECTOR
110V/50HZ
120V/60HZ
TBL1
TBL2
LOCATED IN LEFT (STD OUTPUT) SIDE OF THE MAIN CONTROL BOX
TBML1
GND
2F
TBM2F
THIS IS THE CONNECTION POINT ALL FOR 2F WIRES
* FUSE LOCATED IN MENTOR CONTROL BOX
SEE W9CBW3NA LINE 03
INVERTER
T1
T2
T3
100
FOR INVERTER DRIVEN CONVEYORS
IN LINE REACTOR
A1
B1
C1
A2
B2
C2
SHMD:
MOTOR DISCONNECT SWITCH
ONLY IF CONVEYOR HAS 2 MOTORS
TBM1
TBM2
TBM3
CSBK
MTB-2:
CONLO BELT 2ND MOTOR
BRAKE COIL
MTB:
CONLO BELT MOTOR
00
01
02
03
04
05
06
07
08
09
10
W9CBW3WAA
2009153B

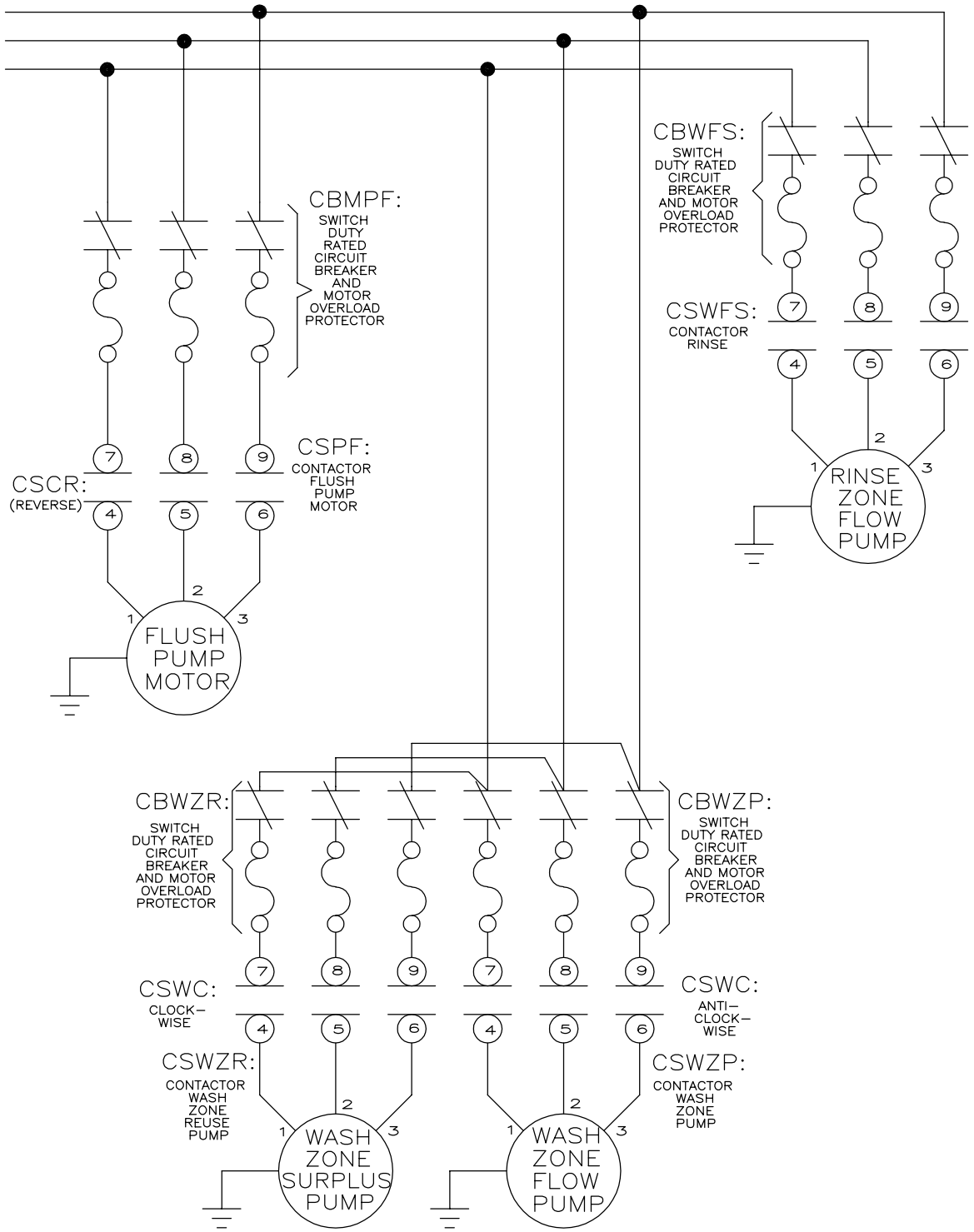

W9CBW3WAA
2009153B

W9CBW3WAA
CBW SYSTEM: MARK 9
SCHEMATIC: POWER DISTRIBUTION
PELLERIN MILNOR CORPORATION

11 12 13 14 15 16 17 18 19

W9CBW3WAA
2009153B

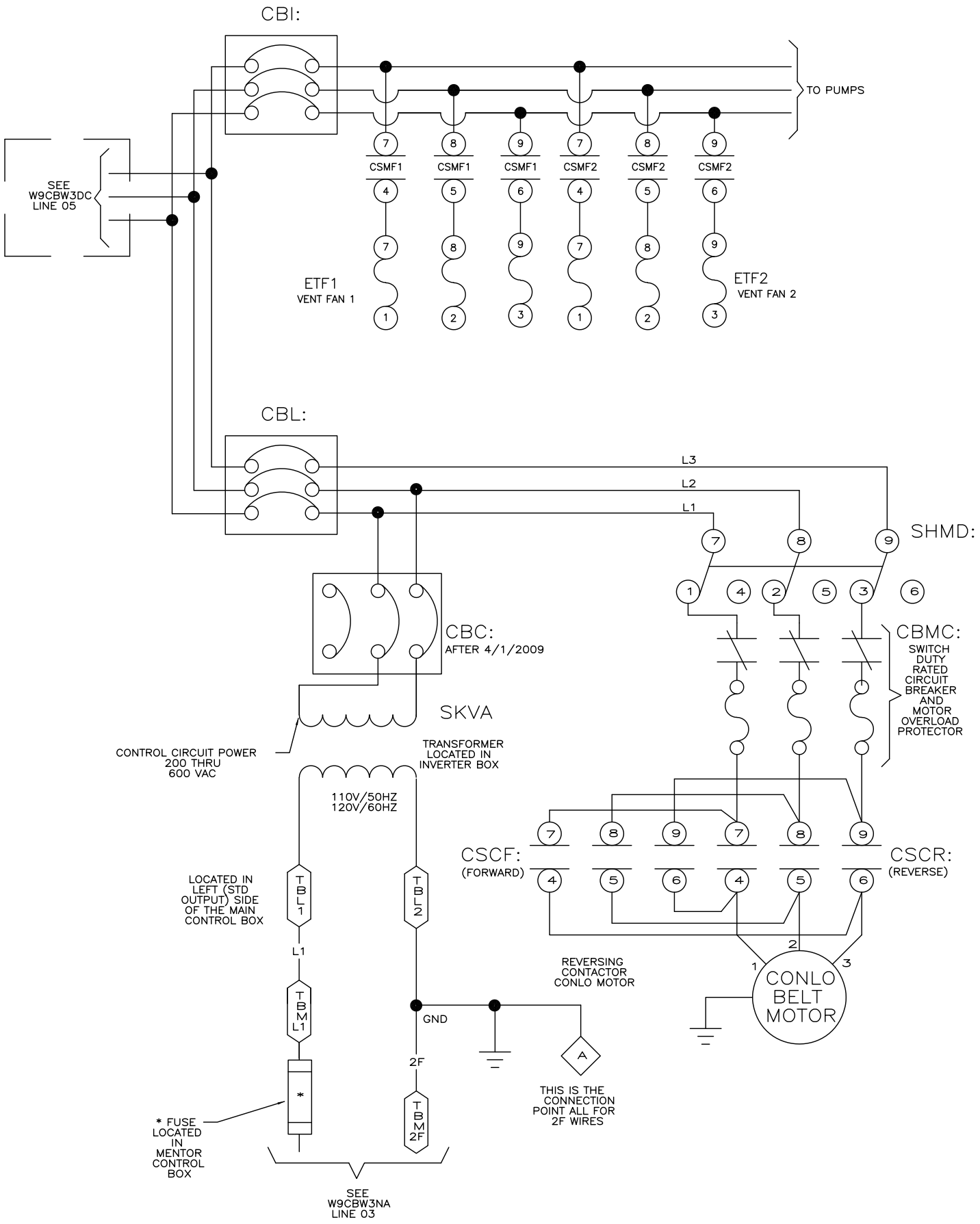
CBI:
TO PUMPS
SEE W9CBW3DC LINE 05
CSMF1
CSMF1
CSMF1
CSMF2
CSMF2
CSMF2
ETF1
VENT FAN 1
ETF2
VENT FAN 2
CBL:
L3
L2
L1
SHMD:
CBC:
AFTER 4/1/2009
SKVA
CBMC:
SWITCH DUTY RATED CIRCUIT BREAKER AND MOTOR OVERLOAD PROTECTOR
CONTROL CIRCUIT POWER 200 THRU 600 VAC
TRANSFORMER LOCATED IN INVERTER BOX
110V/50HZ
120V/60HZ
CSCF:
(FORWARD)
CSCR:
(REVERSE)
LOCATED IN LEFT (STD OUTPUT) SIDE OF THE MAIN CONTROL BOX
TBL1
TBL2
L1
TBML1
GND
2F
TBM2F
REVERSING CONTACTOR CONLO MOTOR
CONLO BELT MOTOR
THIS IS THE CONNECTION POINT ALL FOR 2F WIRES
* FUSE LOCATED IN MENTOR CONTROL BOX
SEE W9CBW3NA LINE 03
00
01
02
03
04
05
06
07
08
09
W9CBW3WAB
2019136B

10 11 12 13 14 15 16 17 18 19

W9CBW3WAB

CBW SYSTEM: MARK 9

SCHEMATIC: POWER DISTRIBUTION PULSE FLOW

PELLERIN MILNOR CORPORATION

W9CBW3WAB
2019136B

W9CBW3WAB
2019136B

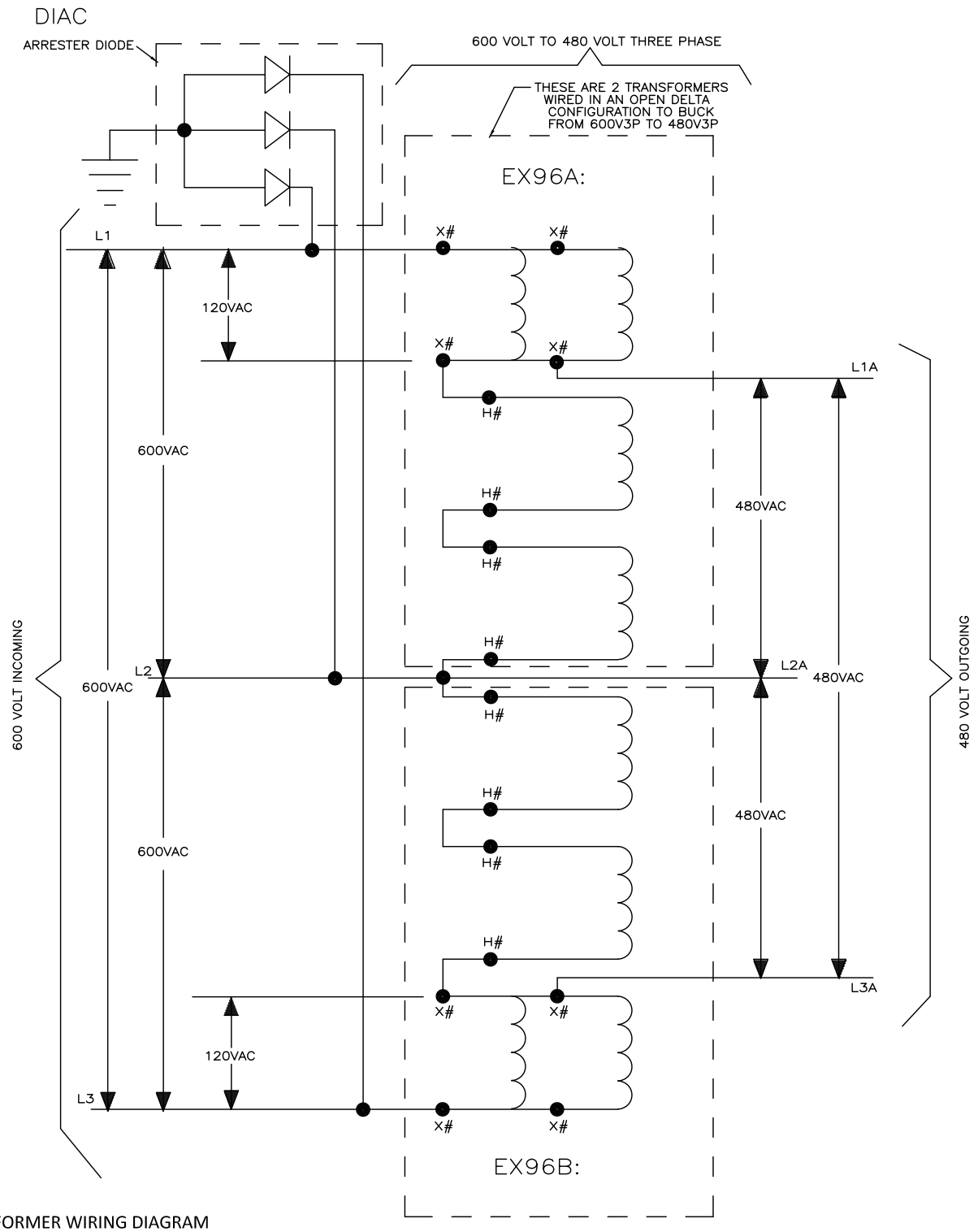

REFER TO TRANSFORMER WIRING DIAGRAM FOR APPROPIATE WIRE NUMBERS.

THE PRIMARY OF EACH TRANSFORMER NOTED BY H# MUST BE WIRED FOR 480 VOLTS. THE SECONDARY OF EACH TRANSFORMER NOTED BY X# MUST BE WIRED FOR 120 VOLTS.

00 01 02 03 04 05 06 07 08 09 10

W9CBW3WB
2023404B

INPUT (SUPPLY SYSTEM)	DESIRED OUTPUT CONNECTION	
DELTA 3 WIRE	WYE 3 OR 4 WIRE	DO NOT USE
OPEN DELTA 3 WIRE	WYE 3 OR 4 WIRE	DO NOT USE
WYE 3 OR 4 WIRE	CLOSED DELTA 3 WIRE	DO NOT USE
WYE 4 WIRE	WYE 3 OR 4 WIRE	OK
WYE 3 OR 4 WIRE	OPEN DELTA 3 WIRE	OK
CLOSED DELTA 3 WIRE	OPEN DELTA 3 WIRE	OK

W9CBW3WB

G3 CBW SYSTEM MARK 9
SCHEMATIC: 600V TO 480V INVERTER

PELLERIN MILNOR CORPORATION

11 12 13 14 15 16 17

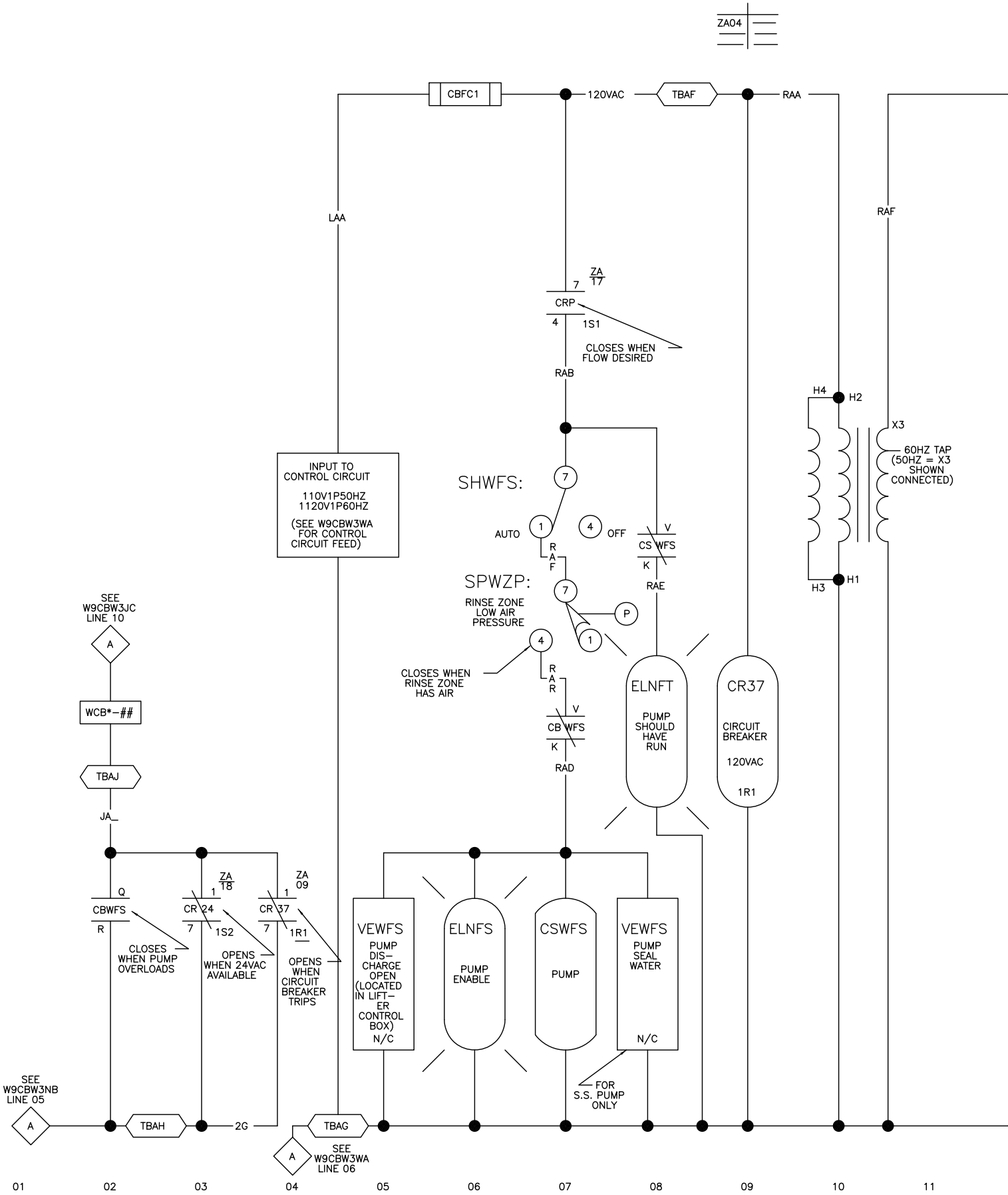

W9CBW3ZA
2019384B

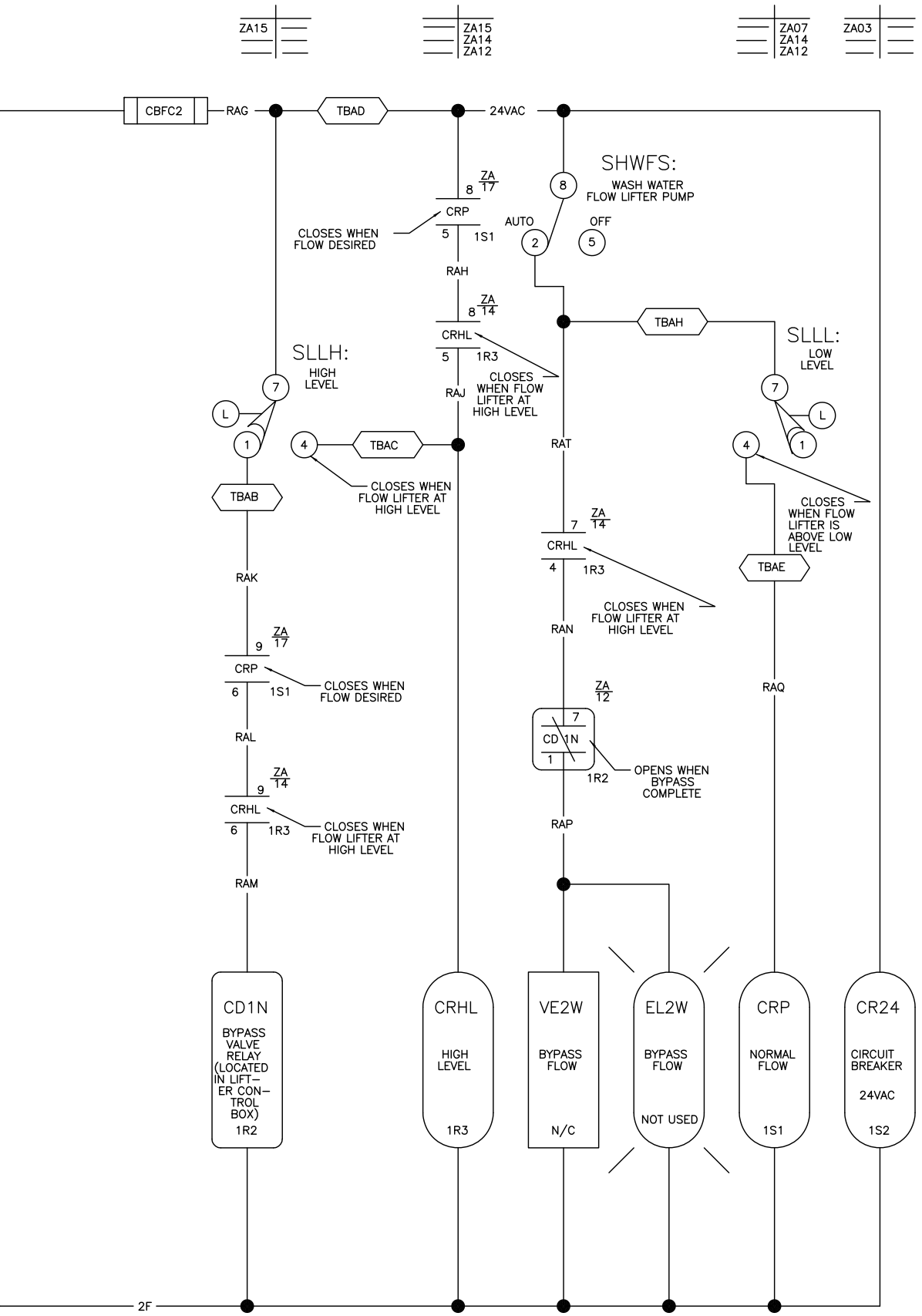

W9CBW3ZA

G3 CBW SYSTEMS MARK 9
SCHEMATIC: WASH WATER FLOW LIFTER CONTROL

PELLERIN MILNOR CORPORATION

NOTES:

1. WHEN LEVEL IS ABOVE LOW, THE PUMP IS ENABLED TO LOWER THE LEVEL IN THE TANK .
2. IF HIGH LEVEL IS REACHED THE BYPASS VALVE IS ALSO ENABLED AND REMAINS ON 7.5 SECONDS AFTER THE HIGH LEVEL IS LOST.
3. * MEANS THIS INPUT IN ANY MODULE IS ASSIGNED TO MONITOR ANY POWER FAILURE IN THIS CONTROLLER.

W9CBW3ZA
2019384B

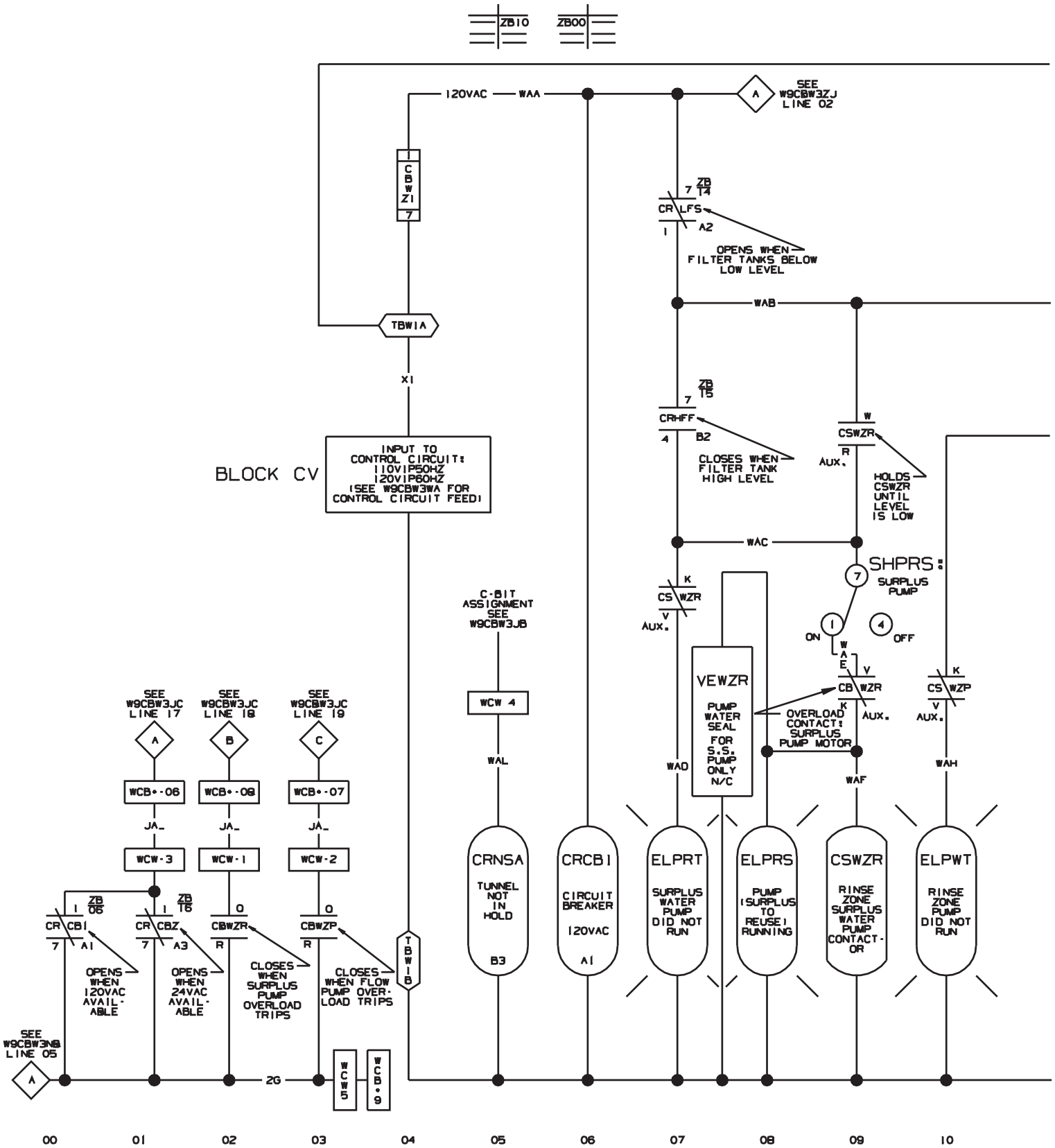
ZB10
ZB00
120VAC
WAA
SEE W9CBW3ZJ LINE 02
CBWZ1
ZB T4
CR LFS
A2
OPENS WHEN FILTER TANKS BELOW LOW LEVEL
WAB
TBW1A
X1
ZB T5
CRHFF
B2
CLOSES WHEN FILTER TANK HIGH LEVEL
CSWZR
AUX.
HOLDS CSWZR UNTIL LEVEL IS LOW
BLOCK CV
INPUT TO CONTROL CIRCUIT: 110V1P50HZ 120V1P50HZ (SEE W9CBW3WA FOR CONTROL CIRCUIT FEED)
WAC
SHPRS: SURPLUS PUMP
CS WZR
AUX.
ON
OFF
C-BIT ASSIGNMENT SEE W9CBW3JB
WCW 4
VEWZR
PUMP WATER SEAL FOR S.S. PUMP ONLY N/C
OVERLOAD CONTACT: SURPLUS PUMP MOTOR
CB WZR
CS WZP
SEE W9CBW3JC LINE 17
SEE W9CBW3JC LINE 18
SEE W9CBW3JC LINE 19
WCB--06
WCB--08
WCB--07
JA_
WCW-3
WCW-1
WCW-2
WAL
WAD
WAF
WAH
CRNSA
TUNNEL NOT IN HOLD
B3
CRCB1
CIRCUIT BREAKER 120VAC
A1
ELPRT
SURPLUS WATER PUMP DID NOT RUN
ELPRS
PUMP (SURPLUS TO REUSE) RUNNING
CSWZR
RINSE ZONE SURPLUS WATER PUMP CONTACT-OR
ELPWT
RINSE ZONE PUMP DID NOT RUN
ZB 06
CR CB1
A1
OPENS WHEN 120VAC AVAIL-ABLE
ZB T6
CR CBZ
A3
OPENS WHEN 24VAC AVAIL-ABLE
CBWZR
CLOSES WHEN SURPLUS PUMP OVERLOAD TRIPS
CBWZP
CLOSES WHEN FLOW PUMP OVER-LOAD TRIPS
TBW1B
SEE W9CBW3NB LINE 05
2G
WCW 5
WCB-9
00
01
02
03
04
05
06
07
08
09
10
W9CBW3ZB
99321B

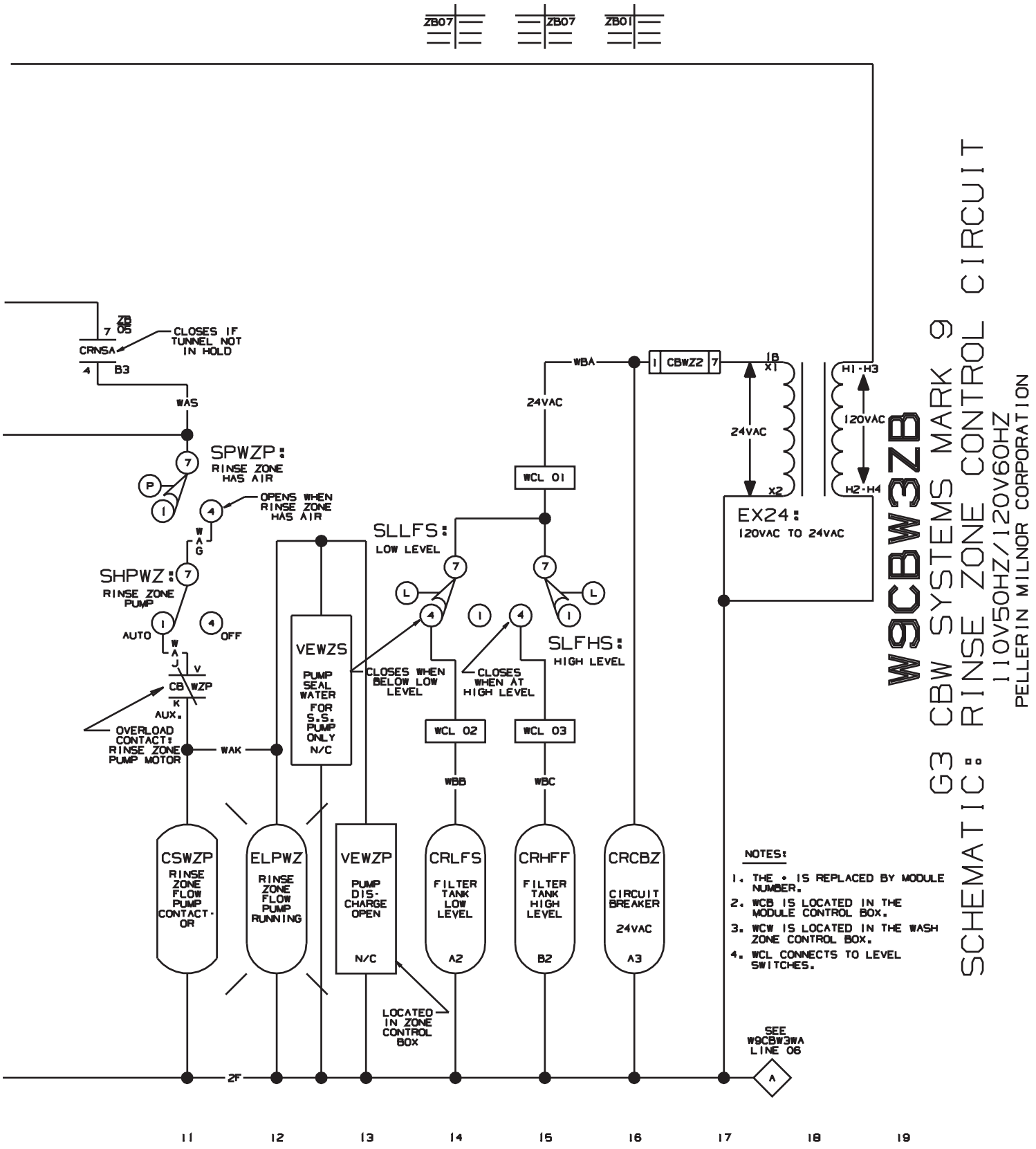
ZB07
ZB07
ZB01
ZB 05
CRNSA
CLOSES IF TUNNEL NOT IN HOLD
B3
WAS
SPWZP:
RINSE ZONE HAS AIR
OPENS WHEN RINSE ZONE HAS AIR
SHPWZ:
RINSE ZONE PUMP
AUTO
OFF
CB WZP
AUX.
OVERLOAD CONTACT: RINSE ZONE PUMP MOTOR
WAK
VEWZS
PUMP SEAL WATER FOR S.S. PUMP ONLY N/C
SLLFS:
LOW LEVEL
CLOSES WHEN BELOW LOW LEVEL
CLOSES WHEN AT HIGH LEVEL
SLFHS:
HIGH LEVEL
WCL 01
WCL 02
WCL 03
WBA
WBB
WBC
24VAC
CBWZ2
EX24:
120VAC TO 24VAC
H1-H3
H2-H4
120VAC
CSWZP
RINSE ZONE FLOW PUMP CONTACT-OR
ELPWZ
RINSE ZONE FLOW PUMP RUNNING
VEWZP
PUMP DIS-CHARGE OPEN
N/C
CRLFS
FILTER TANK LOW LEVEL
A2
CRHFF
FILTER TANK HIGH LEVEL
B2
CRCBZ
CIRCUIT BREAKER
24VAC
A3
LOCATED IN ZONE CONTROL BOX
SEE W9CBW3WA LINE 06
2F
11
12
13
14
15
16
17
18
19
NOTES:
1. THE • IS REPLACED BY MODULE NUMBER.
2. WCB IS LOCATED IN THE MODULE CONTROL BOX.
3. WCW IS LOCATED IN THE WASH ZONE CONTROL BOX.
4. WCL CONNECTS TO LEVEL SWITCHES.
W9CBW3ZB
G3 CBW SYSTEMS MARK 9
SCHEMATIC: RINSE ZONE CONTROL CIRCUIT
110V50HZ/120V60HZ
PELLERIN MILNOR CORPORATION

00 01 02 03 04 05 06 07 08 09

W9CBW3ZC
99133B

240VAC POWER SUPPLY TO
RINSE ZONE CONTROL CIRCUIT
(SEE W9CBW3ZB

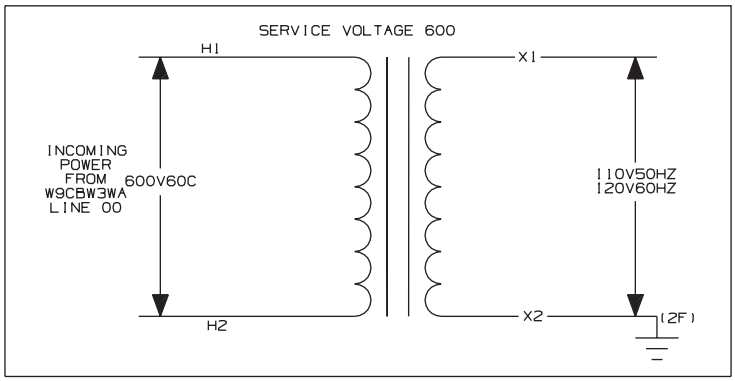

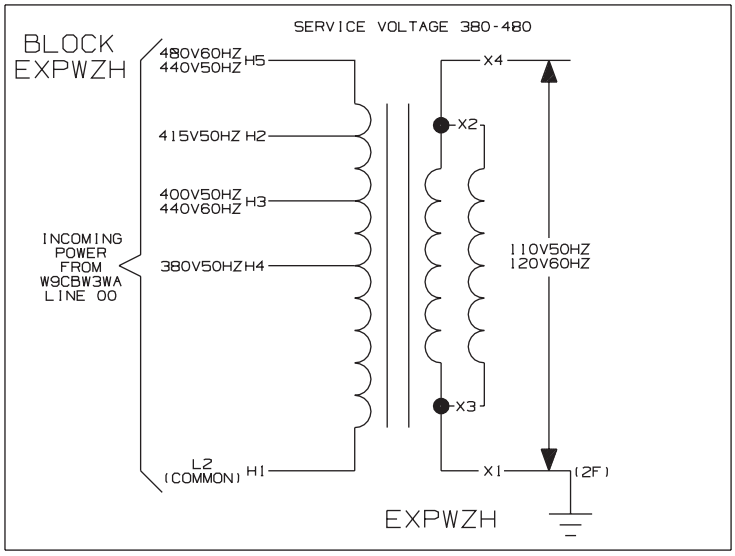

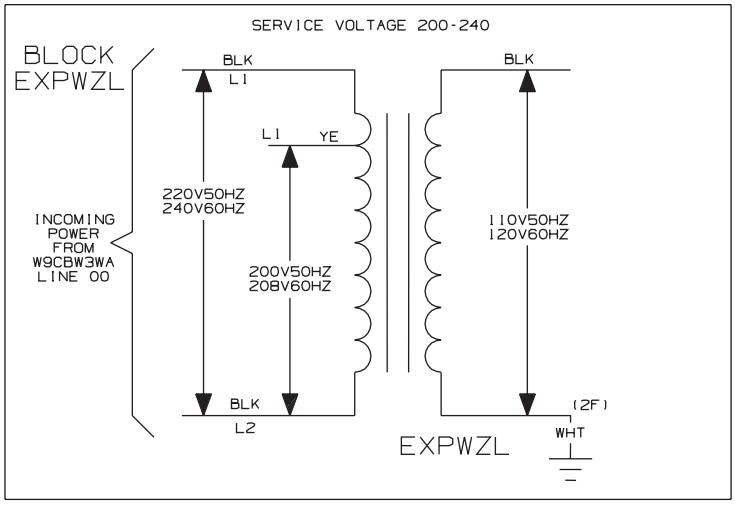

10 11 12 13 14 15 16 17

W9CBW3ZC

G3 CBW SYSTEM MARK 9

SCHEMATIC: RINSE ZONE CONTROL POWER

PELLERIN MILNOR CORPORATION

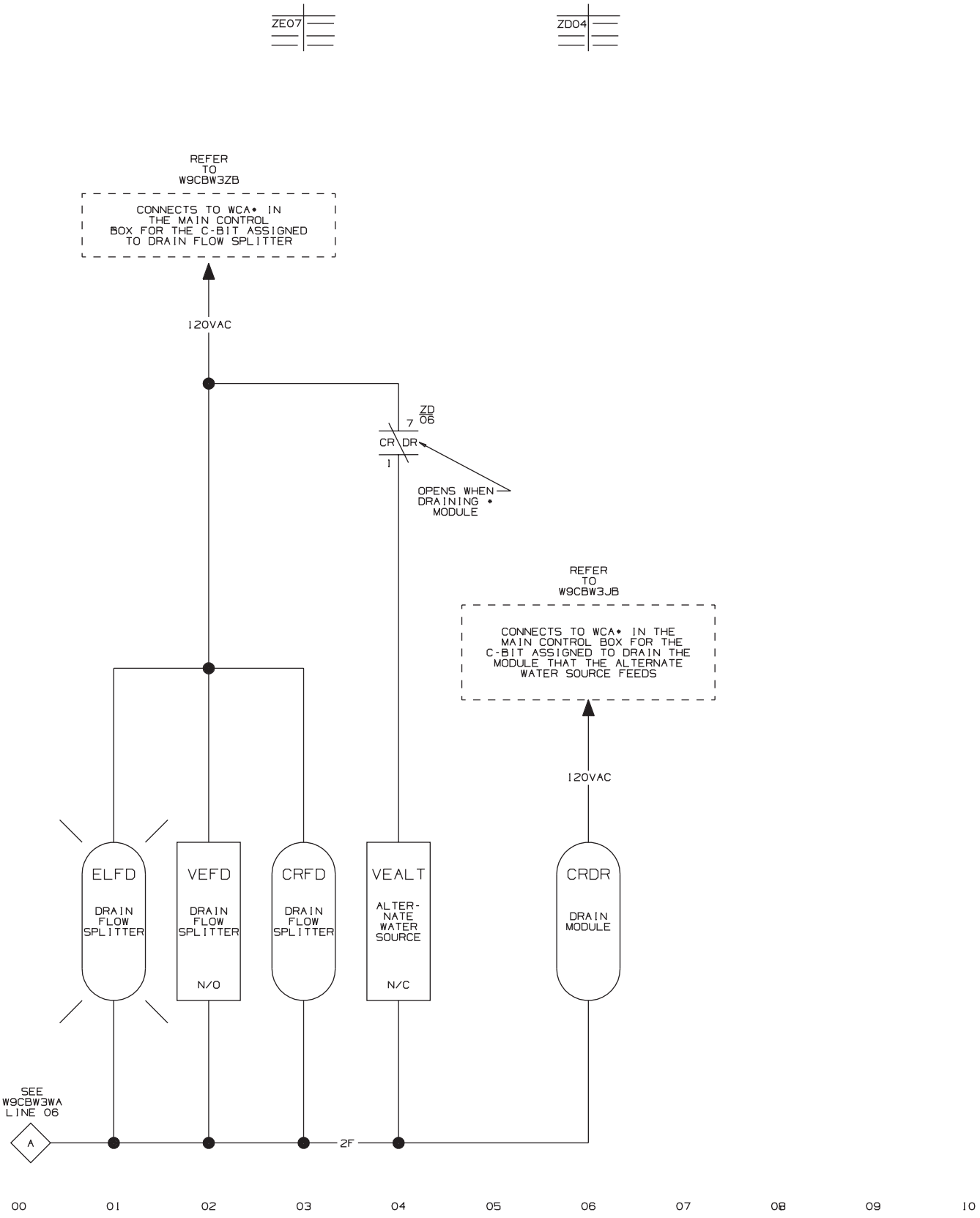

W9CBW3ZD
99133B

W9CBW3ZD

G3 CBW SYSTEMS MARK 9

SCHEMATIC: DRAIN FLOSPLITTER

110V50HZ/120V60HZ

PELLERIN MILNOR CORPORATION

NOTES:

1. THE • REPRESENTS THE MODULE NUMBER.
2. REFER TO SCHEMATIC W8CBW3ZD FOR WASH ZONE DRAIN.
3. REFER TO SCHEMATIC W8CBW3ZE FOR RINSE ZONE DRAIN.

11

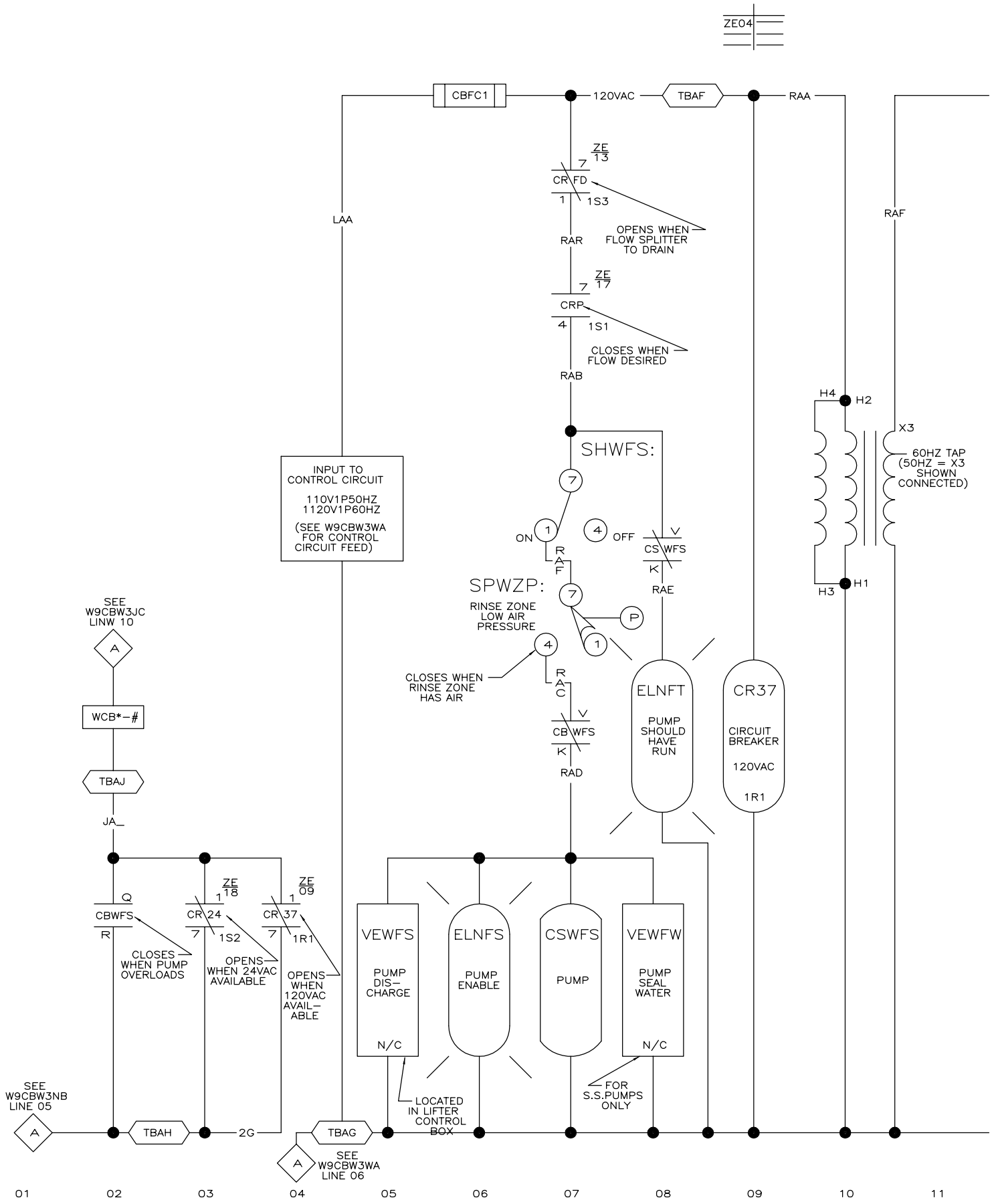

W9CBW3ZE
2007104B

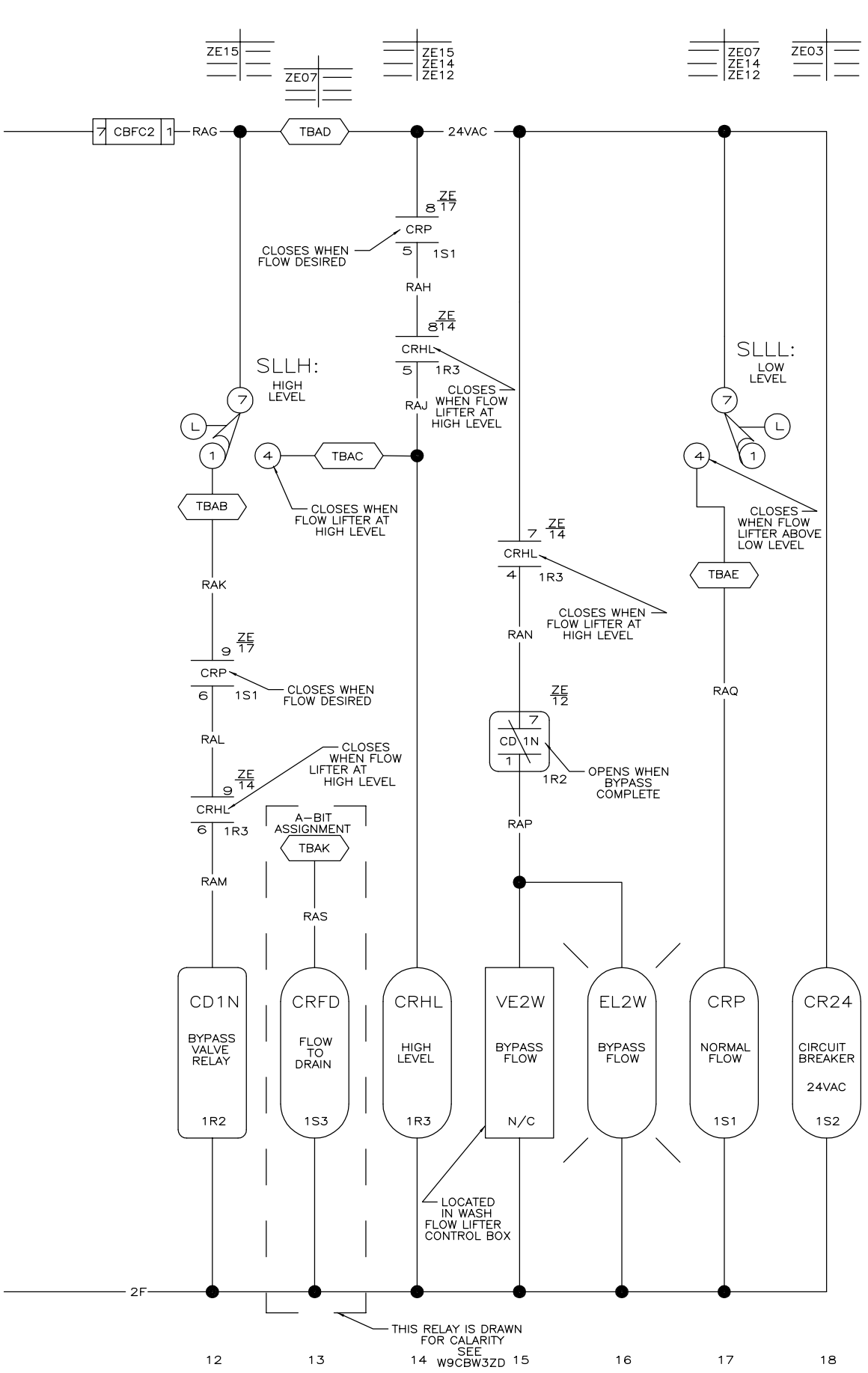

W9CBW3ZE

G3 CBW SYSTEMS: MARK 9
SCHEMATIC: WASH WATER FLOW
LIFTER CONTROL WITH DRAIN

PELLERIN MILNOR CORPORATION

NOTES:

1. WHEN LEVEL IS ABOVE LOW, THE PUMP IS ENABLED TO LOWER THE LEVEL IN THE TANK.
2. IF HIGH LEVEL IS REACHED THE BYPASS VALVE IS ALSO ENABLED AND REMAINS ON 7.5 SECONDS AFTER THE HIGH LEVEL IS LOST.
3. * MEANS THIS INPUT IN ANY MODULE IS ASSIGNED TO MONITOR ANY POWER FAILURE IN THIS CONTROLLER.
4. REFER TO SCHEMATIC W9CBW3ZD FOR THE VALVE CIRCUITS.

W9CBW3ZE
99321B

W9CBW3ZE
2007104B

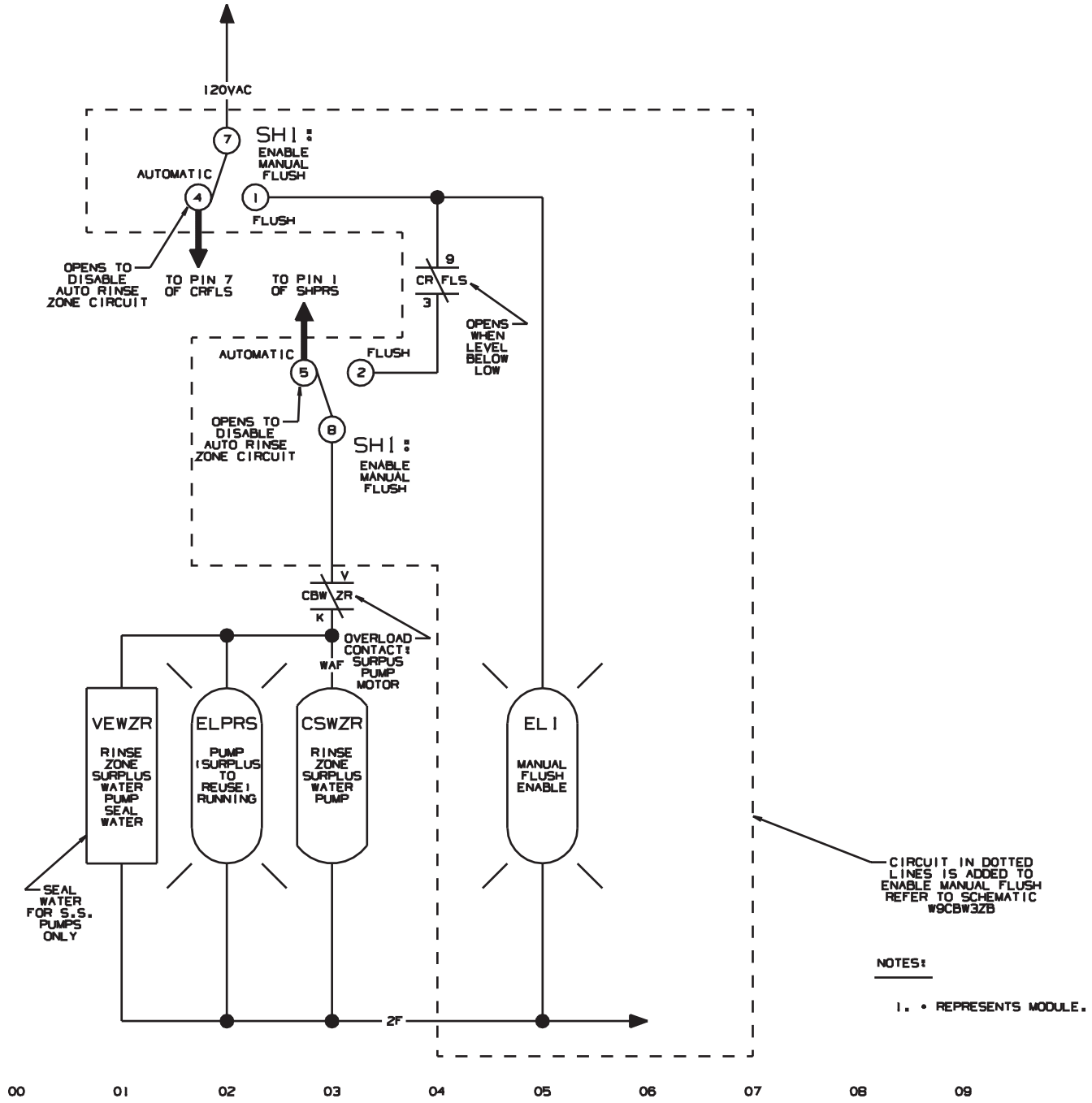

W9CBW3ZF
99321B

W9CBW3ZF

CBW SYSTEMS: MARK 9

SCHEMATIC: WORK WEAR MODULE FOR RINSE ZONE

PELLERIN MILNOR CORPORATION

W9CBW3ZF
993218

W9CBW3ZF
993218

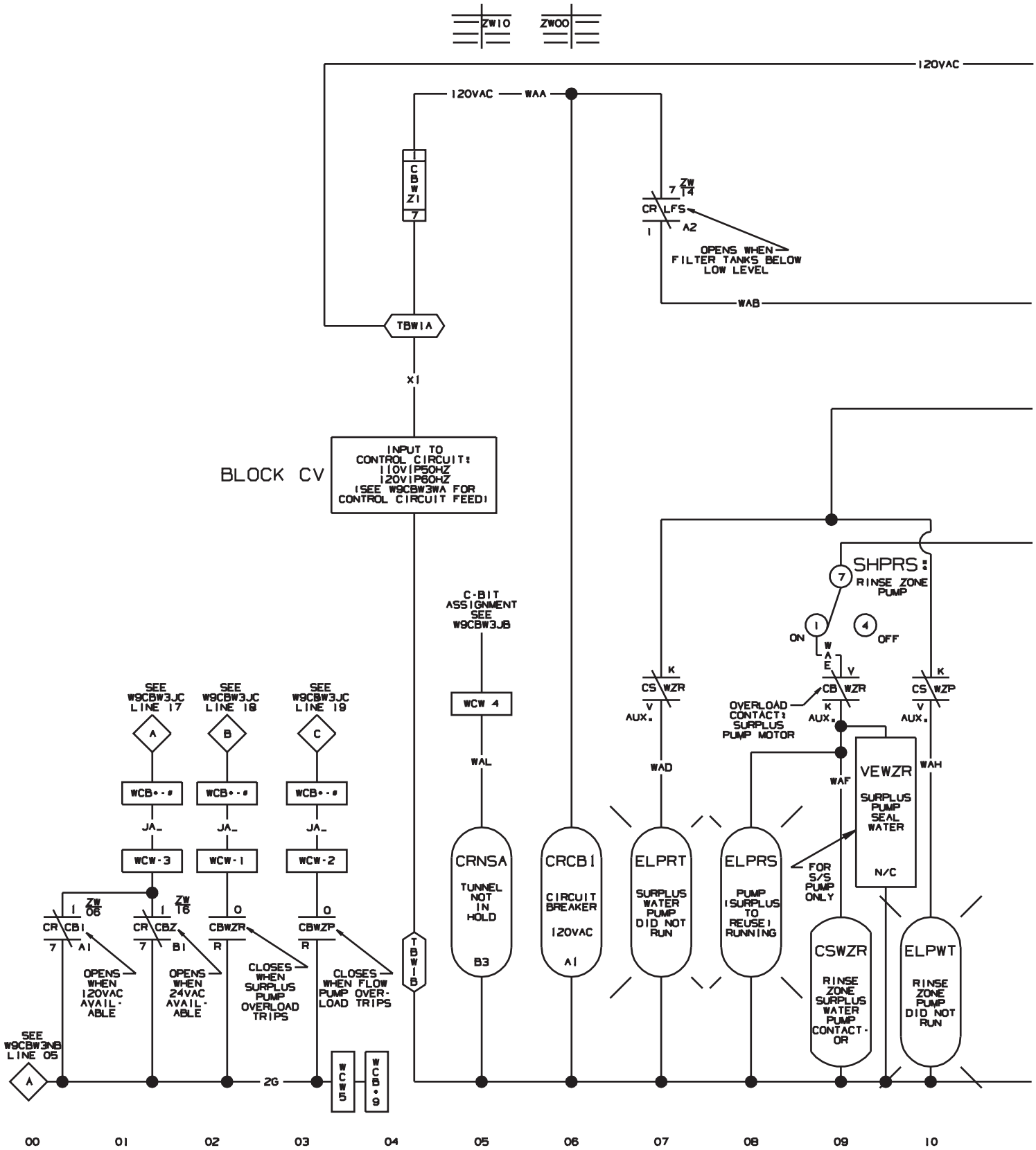

W9CBW3ZG
99321B

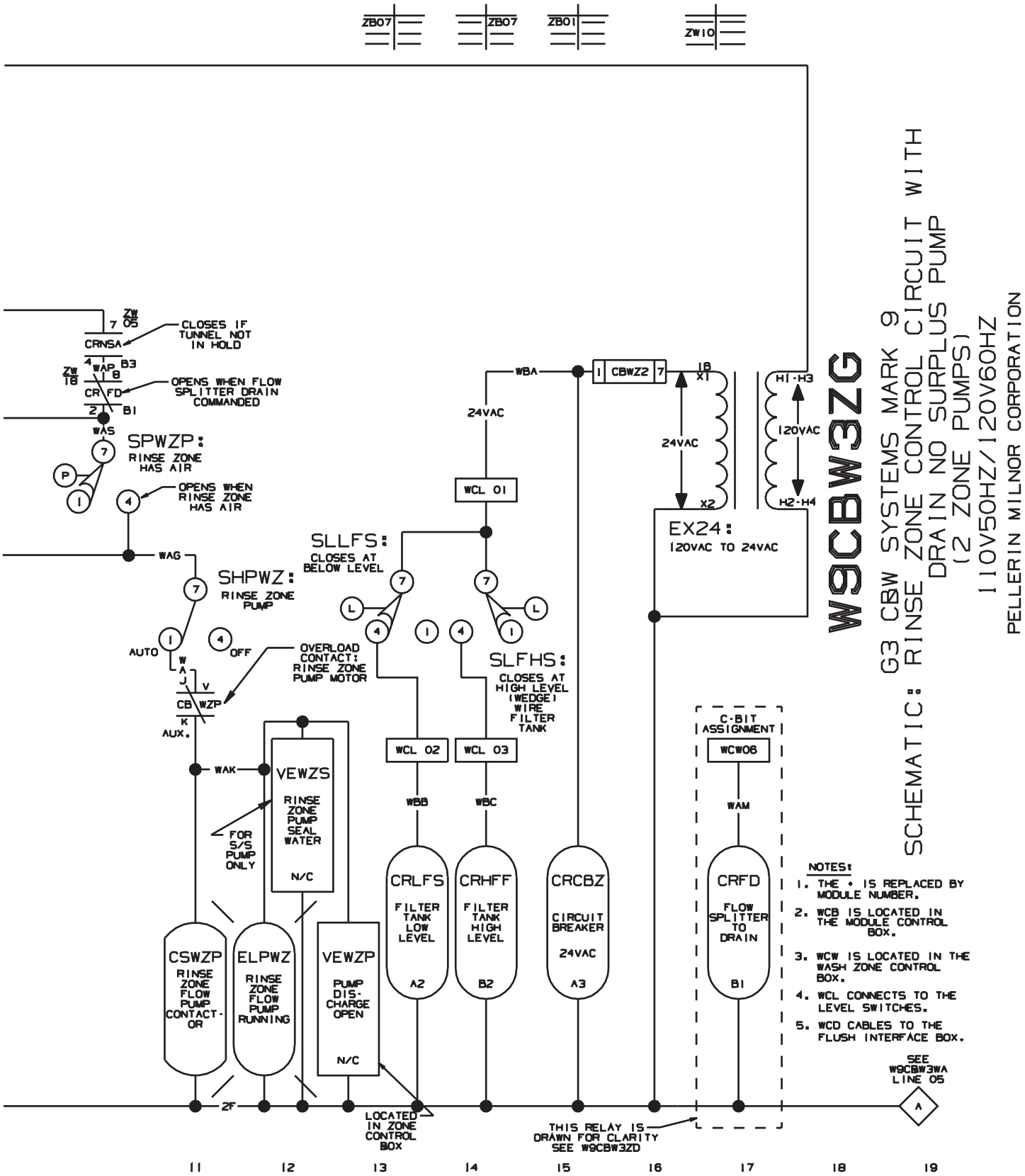

W9CBW3ZG

G3 CBW SYSTEMS MARK 9
SCHEMATIC: RINSE ZONE CONTROL CIRCUIT WITH DRAIN NO SURPLUS PUMP
(2 ZONE PUMPS)
110V50HZ/120V60HZ
PELLERIN MILNOR CORPORATION

NOTES:

1. THE * IS REPLACED BY MODULE NUMBER.
2. WCB IS LOCATED IN THE MODULE CONTROL BOX.
3. WCW IS LOCATED IN THE WASH ZONE CONTROL BOX.
4. WCL CONNECTS TO THE LEVEL SWITCHES.
5. WCD CABLES TO THE FLUSH INTERFACE BOX.

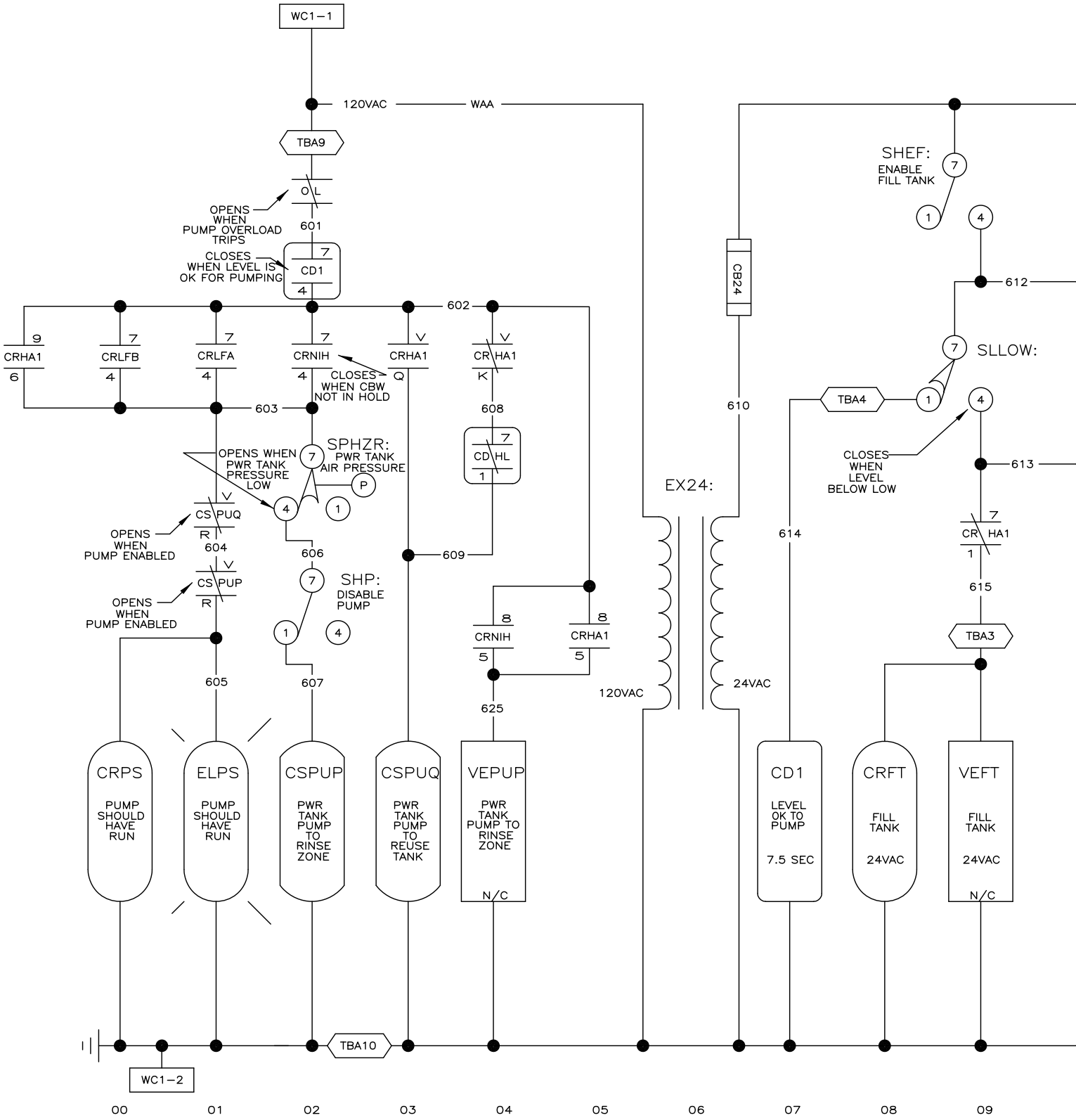
WC1-1
120VAC
WAA
TBA9
OPENS WHEN PUMP OVERLOAD TRIPS
OL
601
CLOSES WHEN LEVEL IS OK FOR PUMPING
CD1
602
CRHA1
CRLFB
CRLFA
CRNIH
CRHA1
CRHA1
CLOSES WHEN CBW NOT IN HOLD
603
608
SPHZR:
PWR TANK AIR PRESSURE
OPENS WHEN PWR TANK PRESSURE LOW
CDHL
OPENS WHEN PUMP ENABLED
CSPUQ
604
606
609
SHP:
DISABLE PUMP
OPENS WHEN PUMP ENABLED
CSPUP
605
607
625
CRNIH
CRHA1
120VAC
EX24:
24VAC
CB24
610
614
SHEF:
ENABLE FILL TANK
612
SLLOW:
TBA4
CLOSES WHEN LEVEL BELOW LOW
613
CRHA1
615
TBA3
CRPS
PUMP SHOULD HAVE RUN
ELPS
PUMP SHOULD HAVE RUN
CSPUP
PWR TANK PUMP TO RINSE ZONE
CSPUQ
PWR TANK PUMP TO REUSE TANK
VEPUP
PWR TANK PUMP TO RINSE ZONE
N/C
CD1
LEVEL OK TO PUMP
7.5 SEC
CRFT
FILL TANK
24VAC
VEFT
FILL TANK
24VAC
N/C
TBA10
WC1-2
00
01
02
03
04
05
06
07
08
09
W9CBW3ZH
2019513B

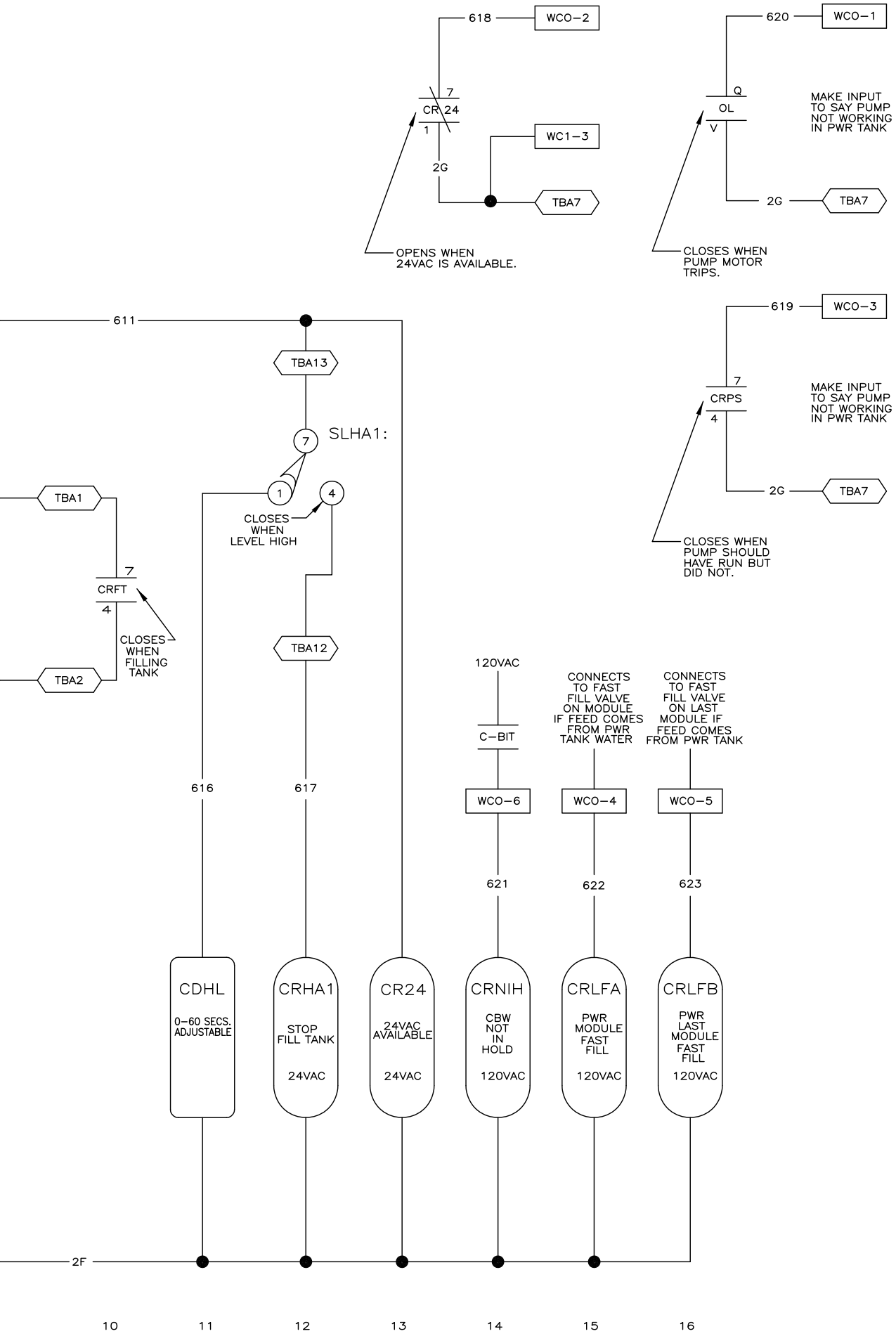

W9CBW3ZH
2019513B

W9CBW3ZH

G3 CBW SYSTEMS MARK 9
SCHEMATIC: PWR TANK
110V1P50HZ/120V1P60HZ

W9CBW3ZH
2019513B

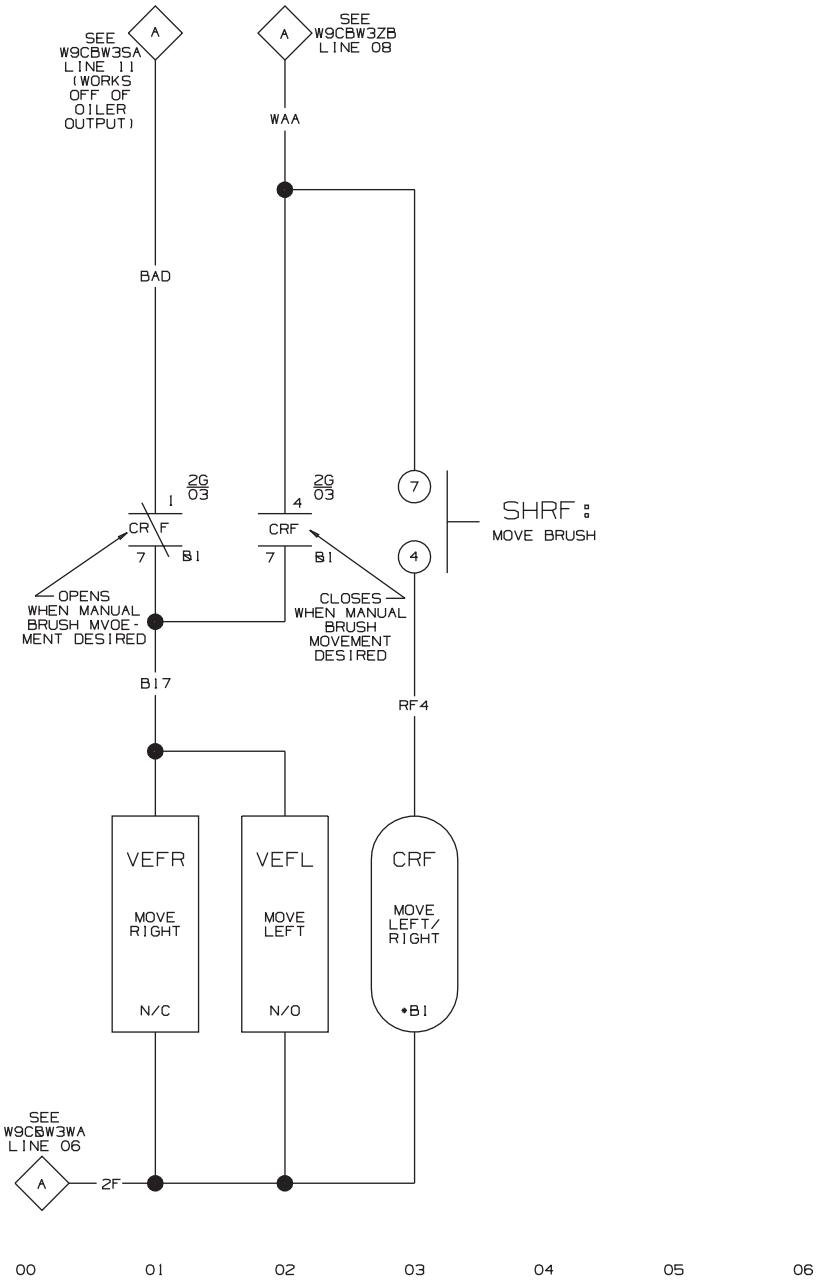

W9CBW3ZJ
991338

W9CBW3ZJ

SCHEMATIC: AUTOBRUSH FLOWSPLITTER/FLOWLIFTER

110V50HZ/120V60HZ

PELLERIN MILNOR CORPORATION

W9CBW3ZJ
991338

W9CBW3ZJ
991338

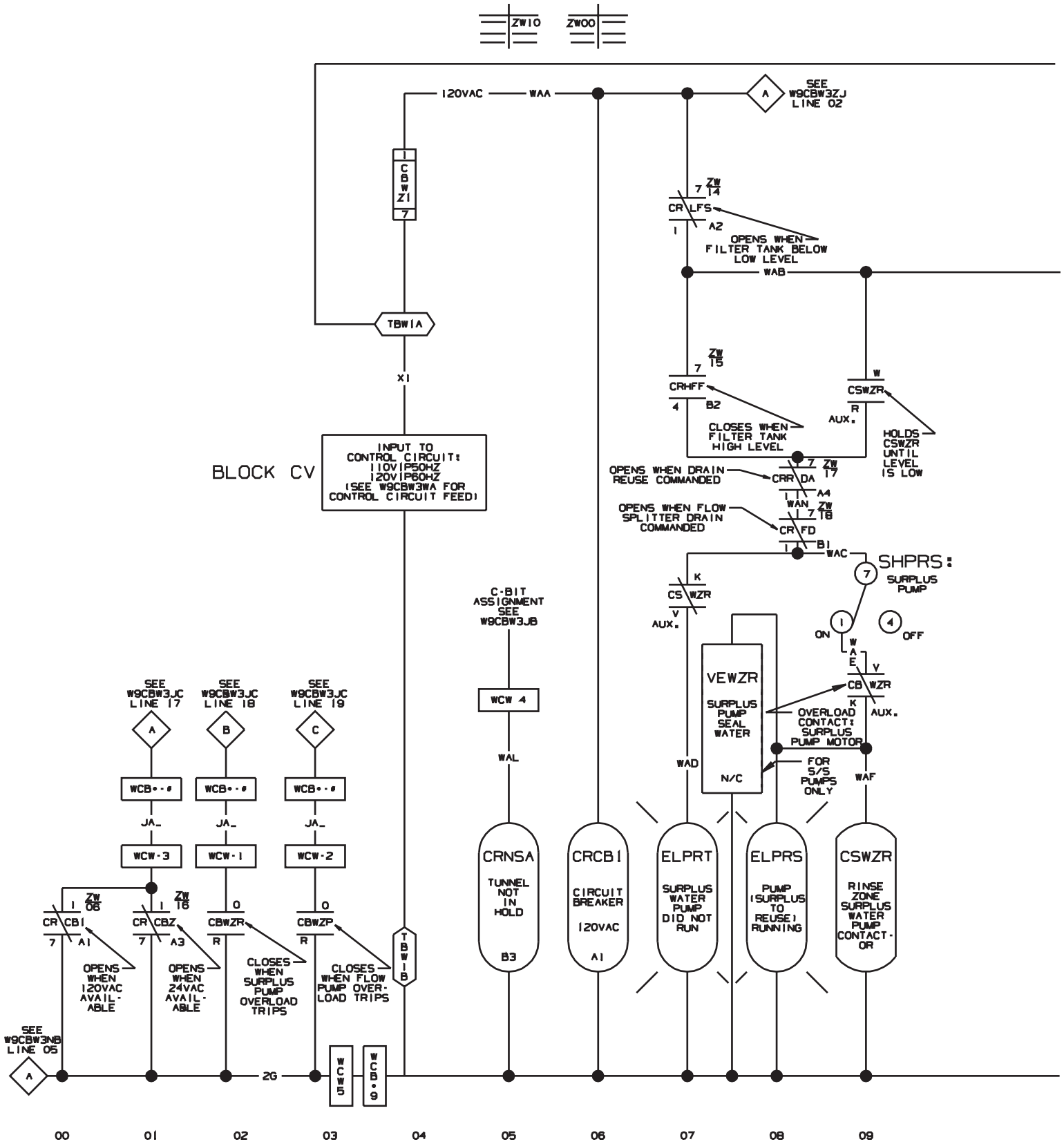

W9CBW3ZW
99321B

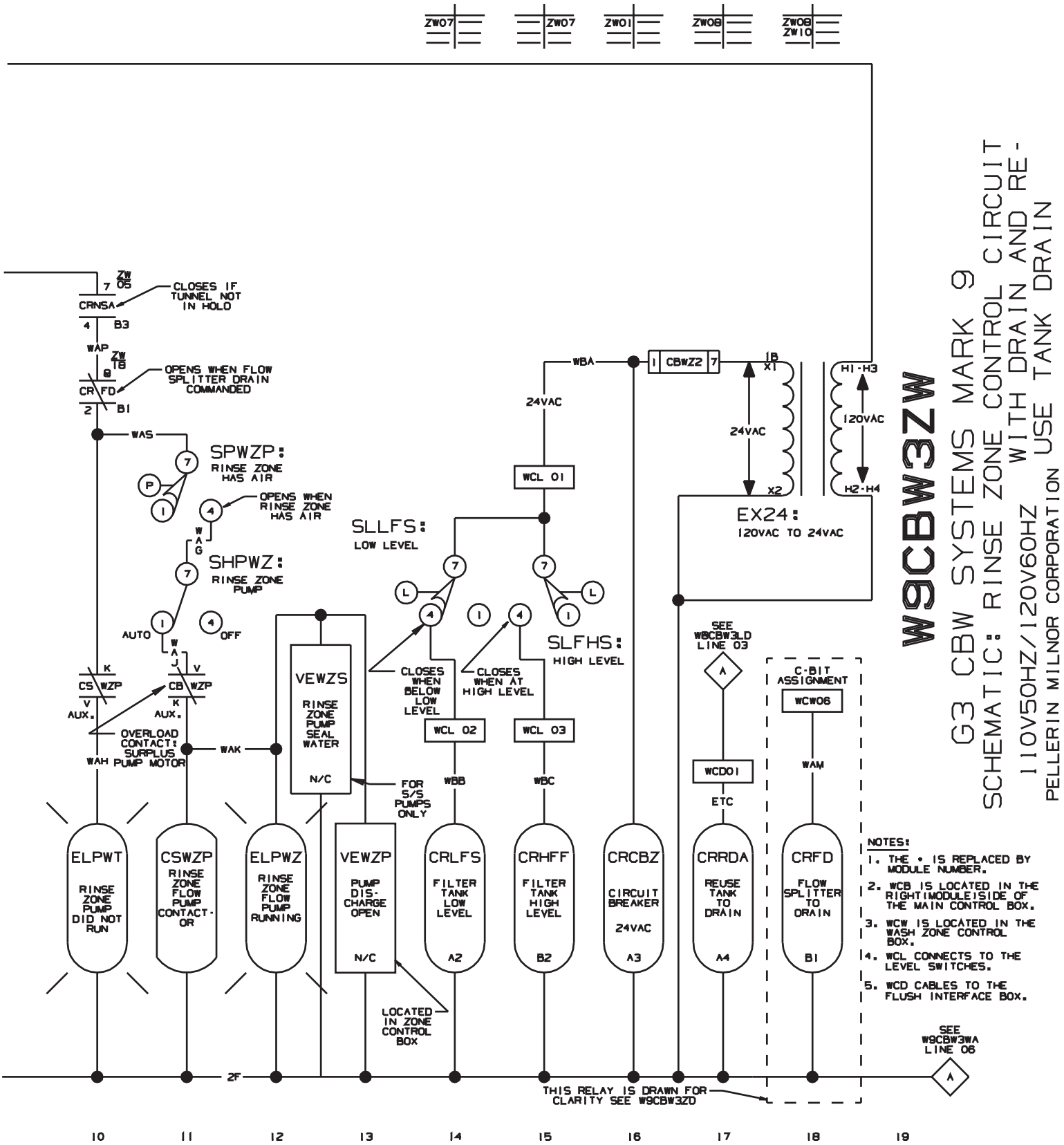

W9CBW3ZW

G3 CBW SYSTEMS MARK 9
SCHEMATIC: RINSE ZONE CONTROL CIRCUIT
WITH DRAIN AND RE-USE TANK DRAIN
110V50HZ/120V60HZ
PELLERIN MILNOR CORPORATION

NOTES:

1. THE • IS REPLACED BY MODULE NUMBER.
2. WCB IS LOCATED IN THE RIGHT(MODULE)SIDE OF THE MAIN CONTROL BOX.
3. WCW IS LOCATED IN THE WASH ZONE CONTROL BOX.
4. WCL CONNECTS TO THE LEVEL SWITCHES.
5. WCD CABLES TO THE FLUSH INTERFACE BOX.

Maestro Modifications 1

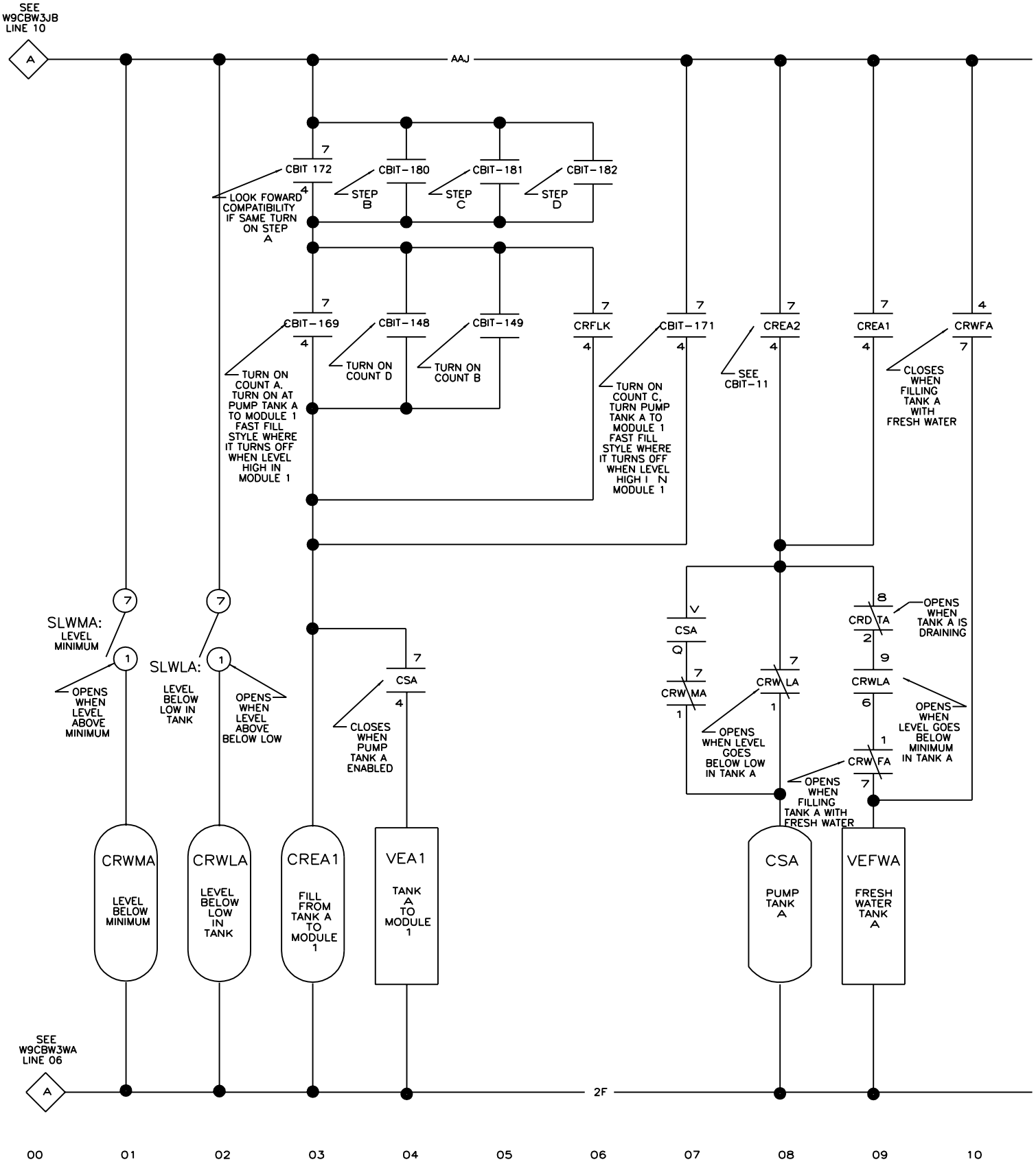

WINSMEWA
2004374B

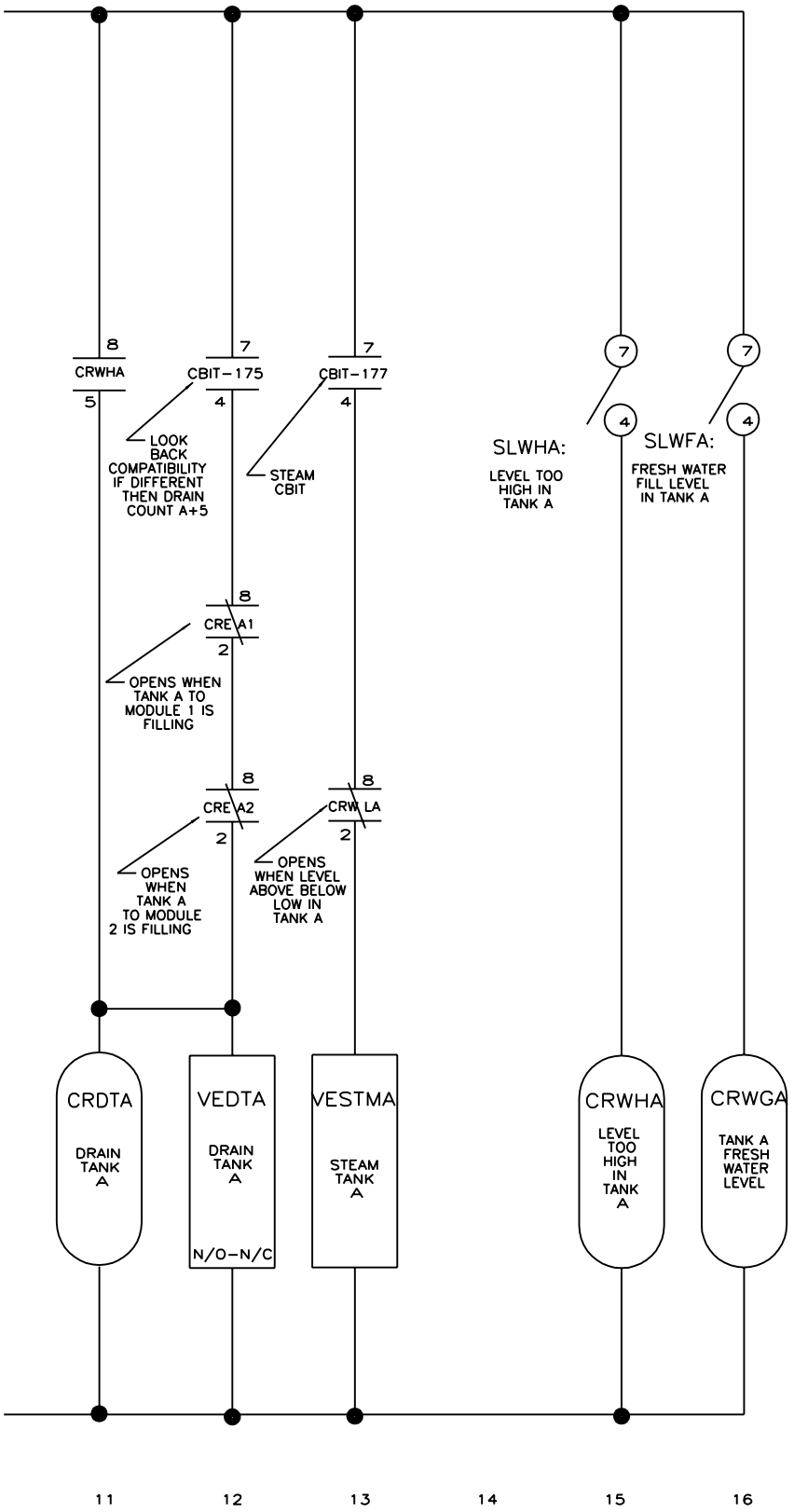

WINSMEWA

MAESTRO TANK A CONTROL OPERATION

110V1P50HZ/120V1P60HZ

PELLERIN MILNOR CORPORATION

KEY

A=BEGINNING
B=1/4 POINT
C=1/2 POINT
D=3/4 POINT

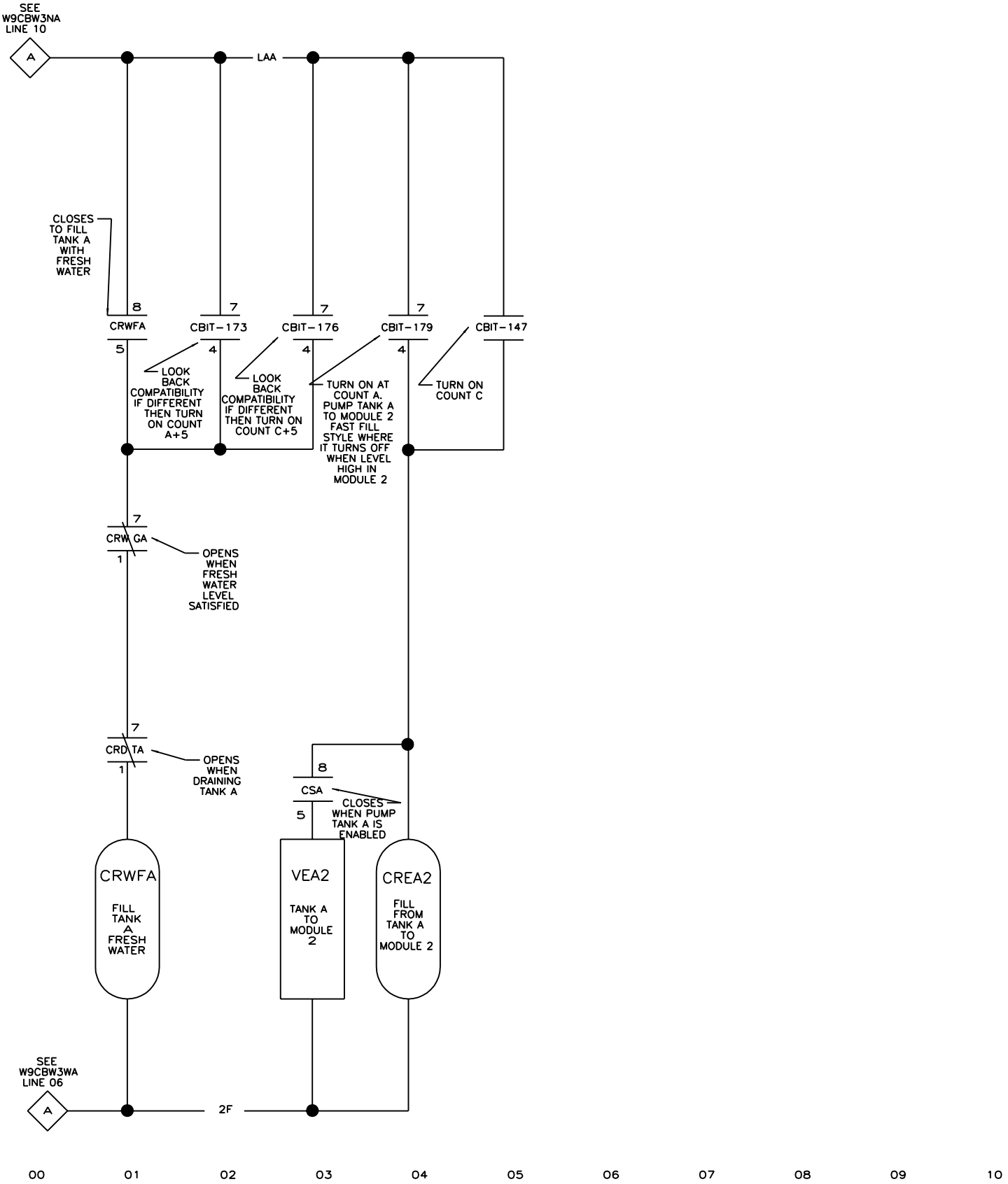

WINSMEWAA
2004374B

11 12 13 14 15 16 17 18 19

KEY

A=BEGINNING
B=1/4 POINT
C=1/2 POINT
D=3/4 POINT

WINSMEWAA

MAESTRO TANK A CONTROL OPERATION

110V1P50HZ/120V1P60HZ

PELLERIN MILNOR CORPORATION

WINSMEWAA
2004374B

WINSMEWAA
2004374B

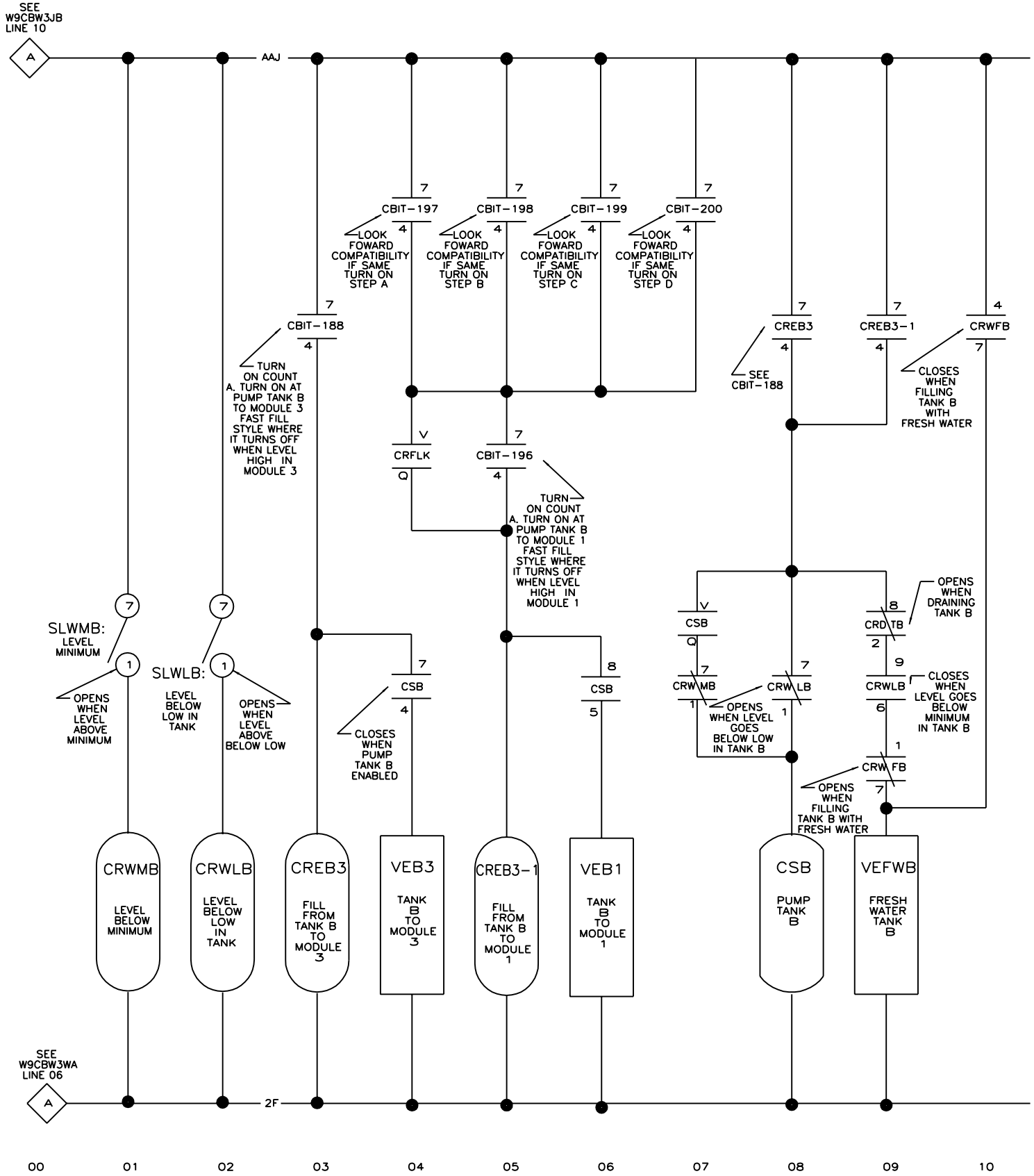

WINSMEWB
2004374B

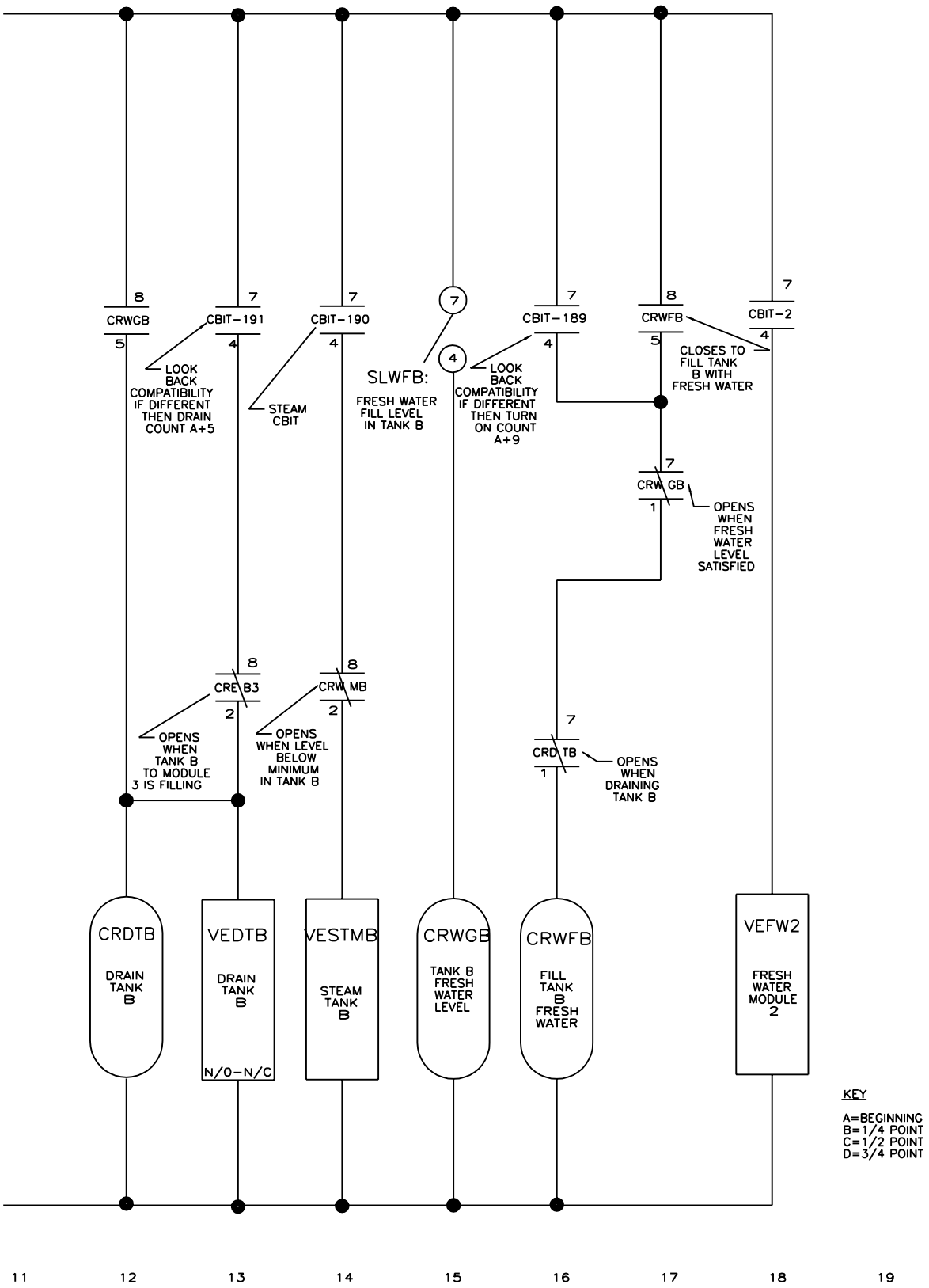

WINSMEWB

MAESTRO TANK B CONTROL OPERATION

110V1P50HZ/120V1P60HZ

PELLERIN MILNOR CORPORATION

KEY

A=BEGINNING
B=1/4 POINT
C=1/2 POINT
D=3/4 POINT

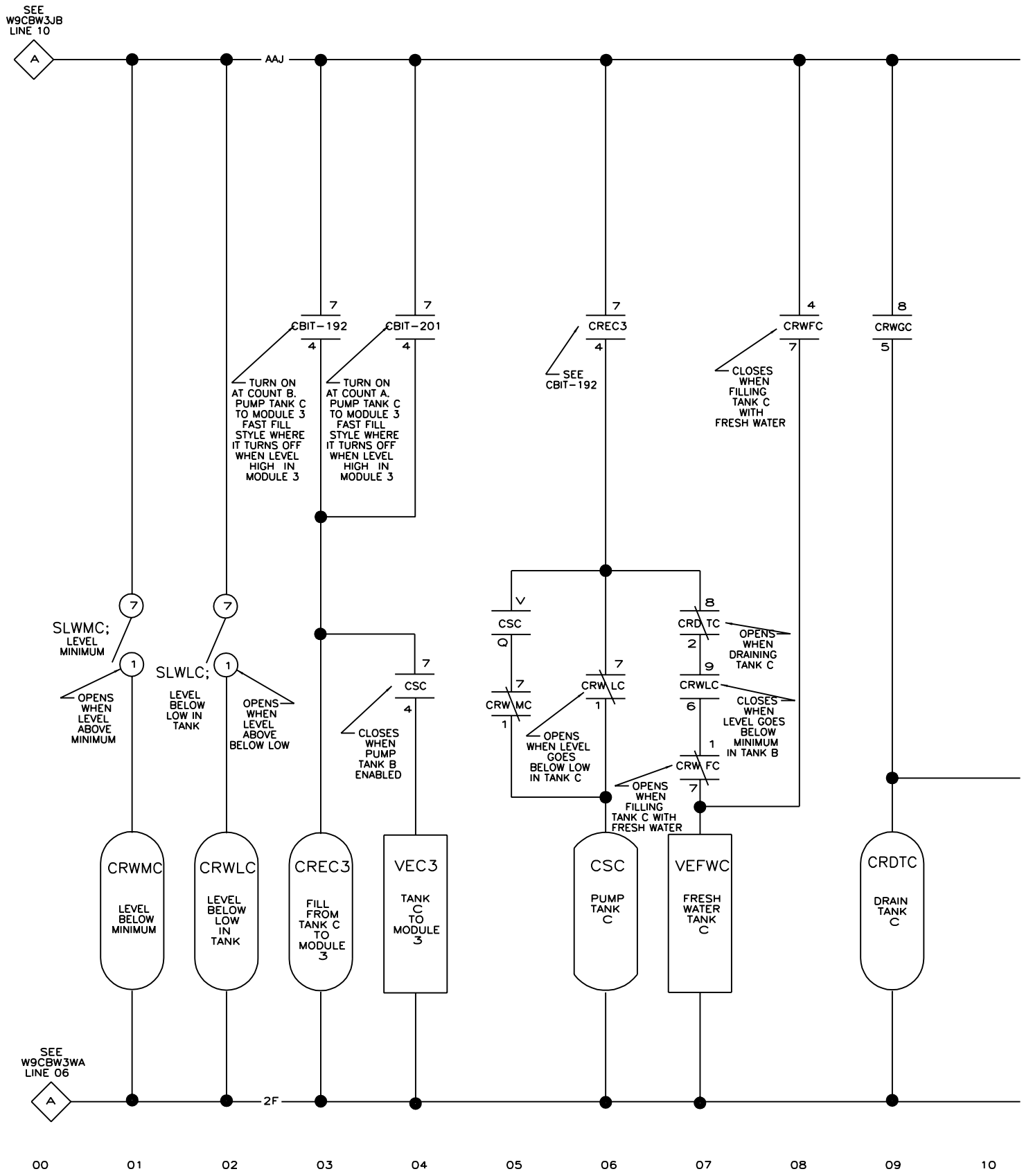

WINSMEWC
2004374B

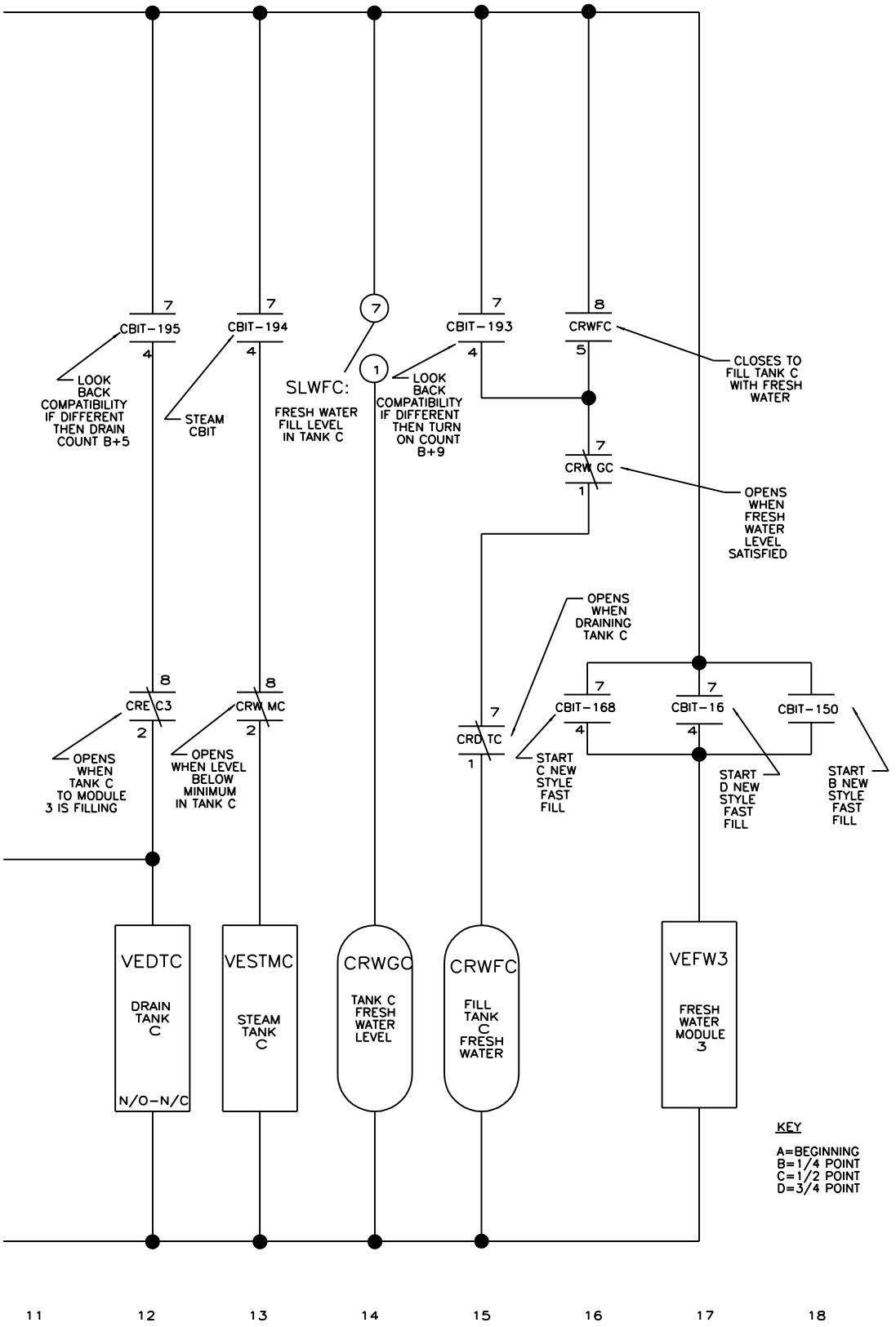

WINSMEWC
MAESTRO TANK C CONTROL OPERATION
110V1P50HZ/120V1P60HZ
PELLERIN MILNOR CORPORATION

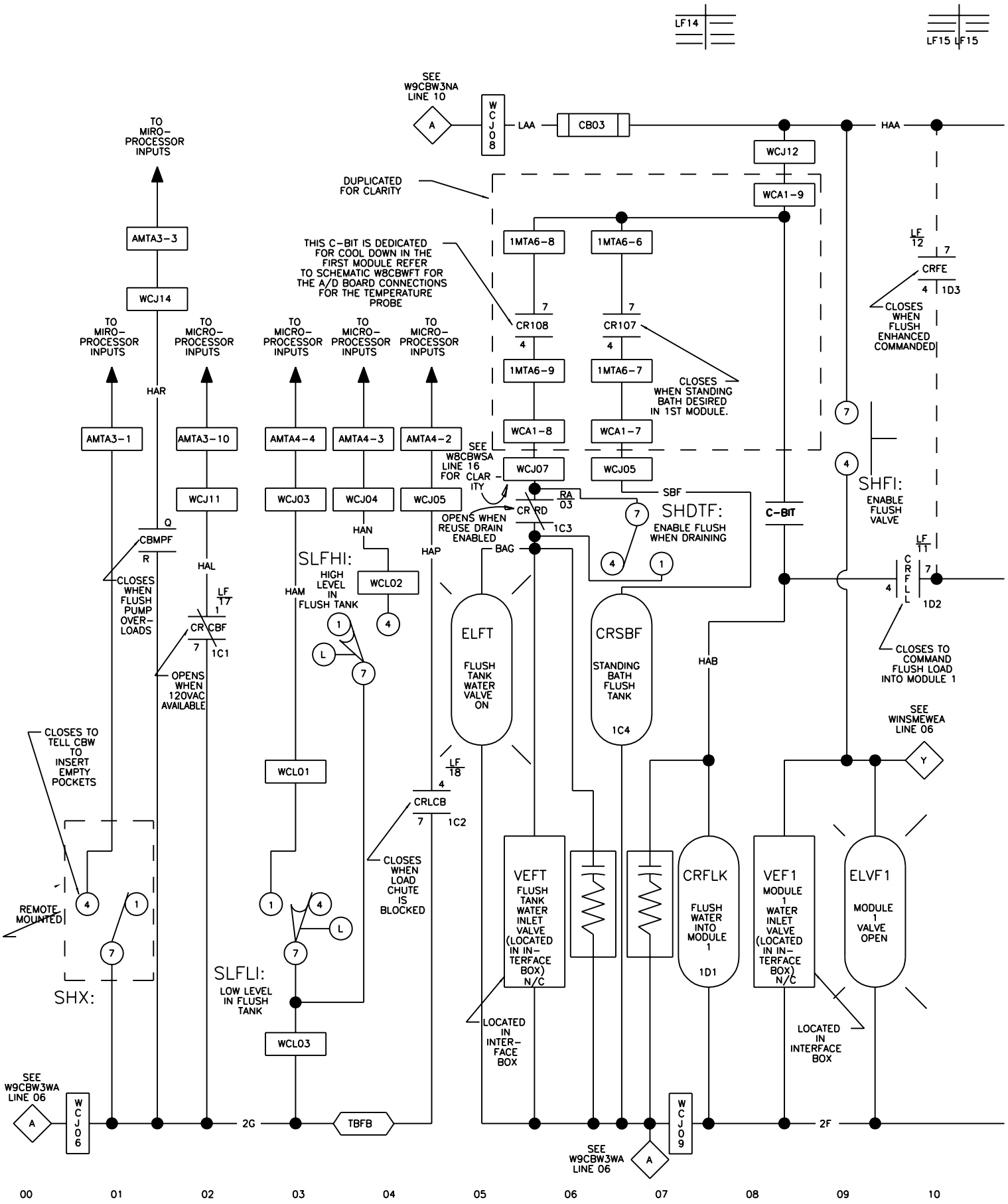
LF14
LF15 LF15
SEE W9CBW3NA LINE 10
A
WCJ08
LAA
CB03
HAA
WCJ12
WCA1-9
TO MIRO-PROCESSOR INPUTS
DUPLICATED FOR CLARITY
AMTA3-3
THIS C-BIT IS DEDICATED FOR COOL DOWN IN THE FIRST MODULE REFER TO SCHEMATIC W8CBWFT FOR THE A/D BOARD CONNECTIONS FOR THE TEMPERATURE PROBE
1MTA6-8
1MTA6-6
LF 12
CRFE
1D3
CLOSES WHEN FLUSH ENHANCED COMMANDED
WCJ14
TO MICRO-PROCESSOR INPUTS
CR108
CR107
1MTA6-9
1MTA6-7
CLOSES WHEN STANDING BATH DESIRED IN 1ST MODULE.
HAR
AMTA3-1
AMTA3-10
AMTA4-4
AMTA4-3
AMTA4-2
WCA1-8
WCA1-7
SEE W8CBWSA LINE 16 FOR CLARITY
WCJ07
WCJ05
WCJ11
WCJ03
WCJ04
WCJ05
RA 03
CR RD
1C3
SBF
SHDTF:
ENABLE FLUSH WHEN DRAINING
C-BIT
SHFI:
ENABLE FLUSH VALVE
OPENS WHEN REUSE DRAIN ENABLED
CBMPF
R
HAN
HAP
BAG
SLFHI:
HIGH LEVEL IN FLUSH TANK
WCL02
HAL
HAM
LF 17
CR CBF
1C1
CLOSES WHEN FLUSH PUMP OVER-LOADS
OPENS WHEN 120VAC AVAILABLE
ELFT
FLUSH TANK WATER VALVE ON
CRSBF
STANDING BATH FLUSH TANK
1C4
LF 11
CRFLL
1D2
CLOSES TO COMMAND FLUSH LOAD INTO MODULE 1
HAB
SEE WINSMEWEA LINE 06
Y
CLOSES TO TELL CBW TO INSERT EMPTY POCKETS
WCL01
LF 18
CRLCB
1C2
CLOSES WHEN LOAD CHUTE IS BLOCKED
VEFT
FLUSH TANK WATER INLET VALVE (LOCATED IN IN-TERFACE BOX) N/C
CRFLK
FLUSH WATER INTO MODULE 1
1D1
VEF1
MODULE 1 WATER INLET VALVE (LOCATED IN IN-TERFACE BOX) N/C
ELVF1
MODULE 1 VALVE OPEN
REMOTE MOUNTED
SLFLI:
LOW LEVEL IN FLUSH TANK
SHX:
WCL03
LOCATED IN INTER-FACE BOX
LOCATED IN INTERFACE BOX
SEE W9CBW3WA LINE 06
WCJ06
2G
TBFB
2F
WCJ09
00
01
02
03
04
05
06
07
08
09
10
WINSMEWD
2004374B

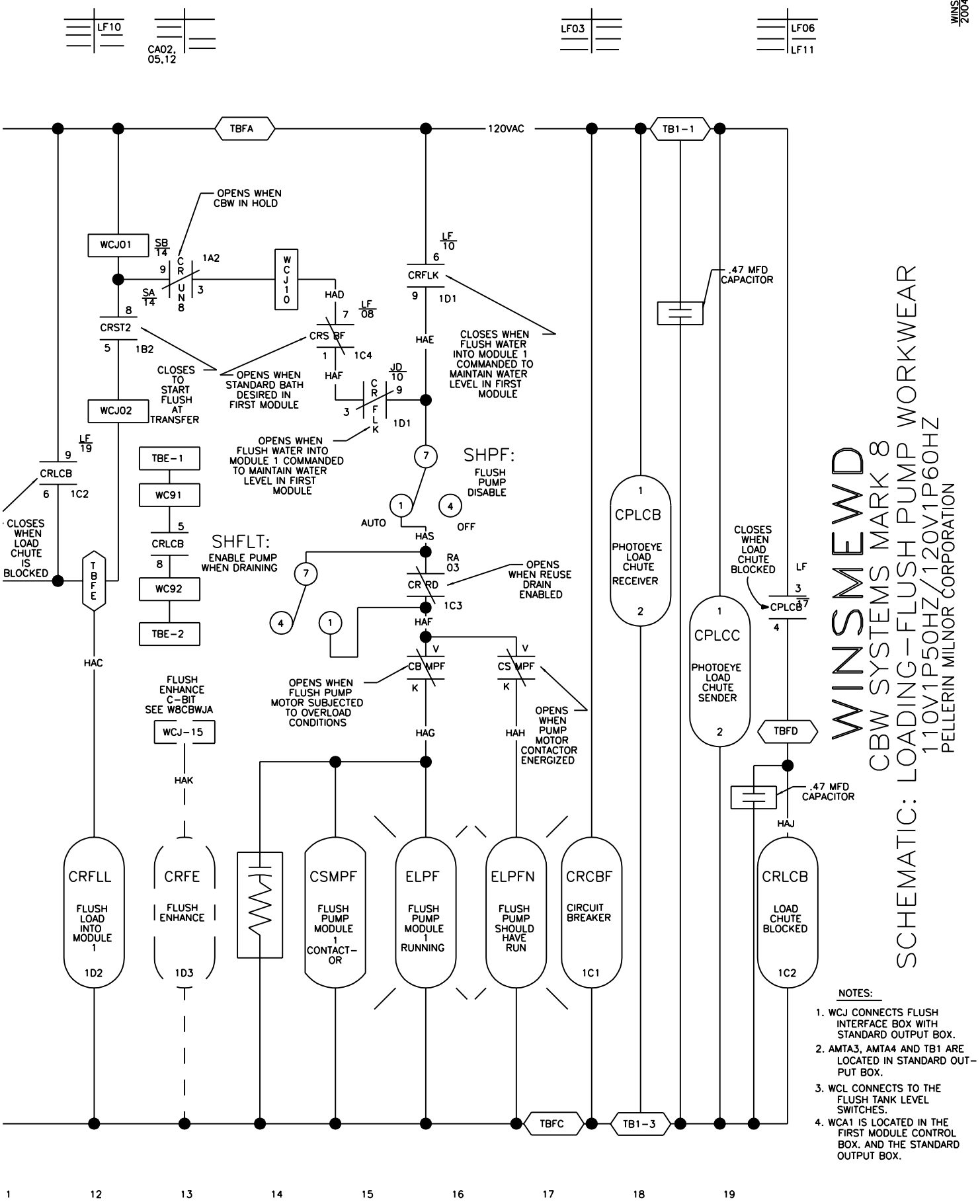

WINSMEWD

CBW SYSTEMS MARK 8

SCHEMATIC: LOADING-FLUSH PUMP WORKWEAR

110V1P50HZ/120V1P60HZ

PELLERIN MILNOR CORPORATION

NOTES:

1. WCJ CONNECTS FLUSH INTERFACE BOX WITH STANDARD OUTPUT BOX.
2. AMTA3, AMTA4 AND TB1 ARE LOCATED IN STANDARD OUT-PUT BOX.
3. WCL CONNECTS TO THE FLUSH TANK LEVEL SWITCHES.
4. WCA1 IS LOCATED IN THE FIRST MODULE CONTROL BOX. AND THE STANDARD OUTPUT BOX.

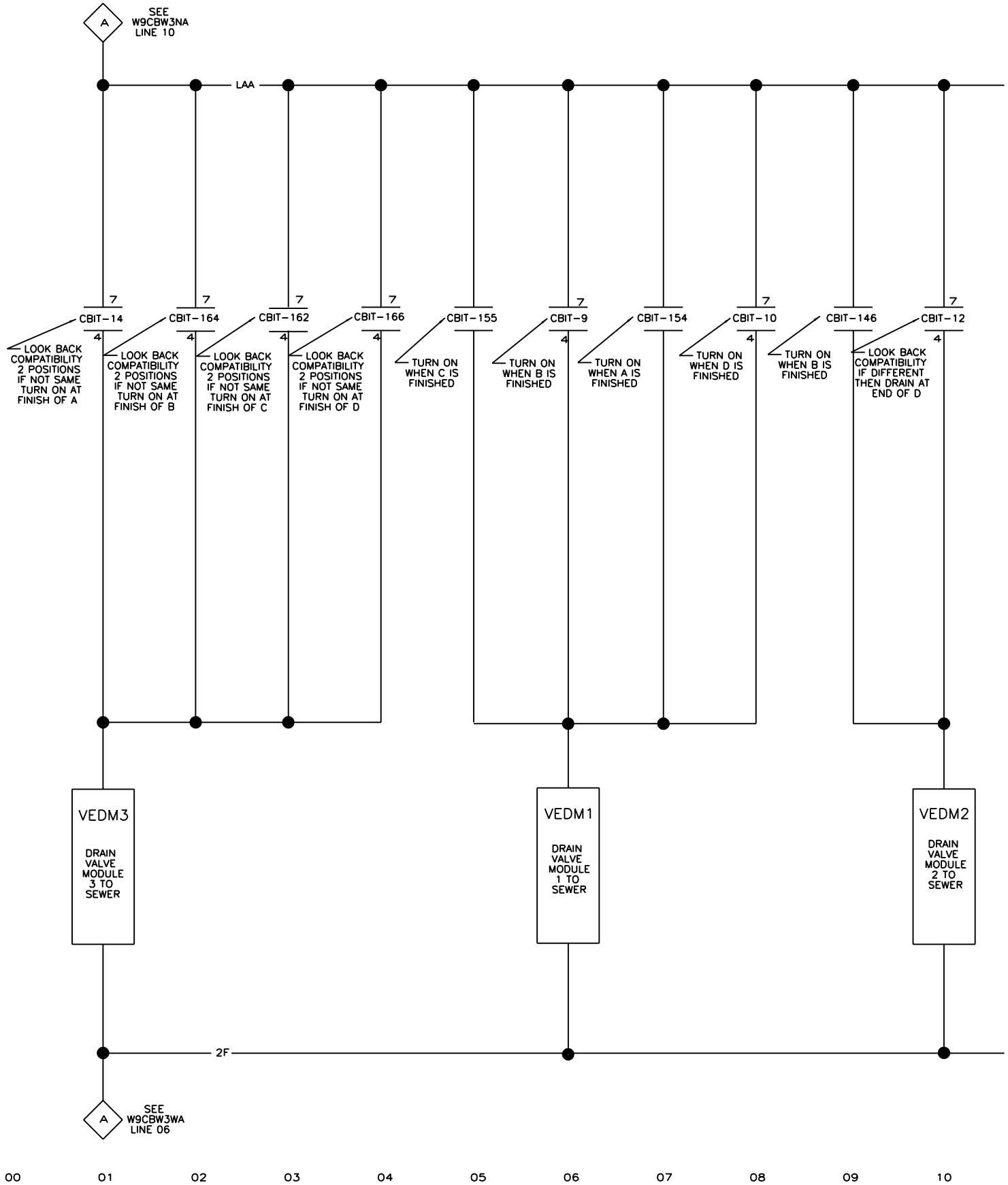

WINSMEWE
2004374B

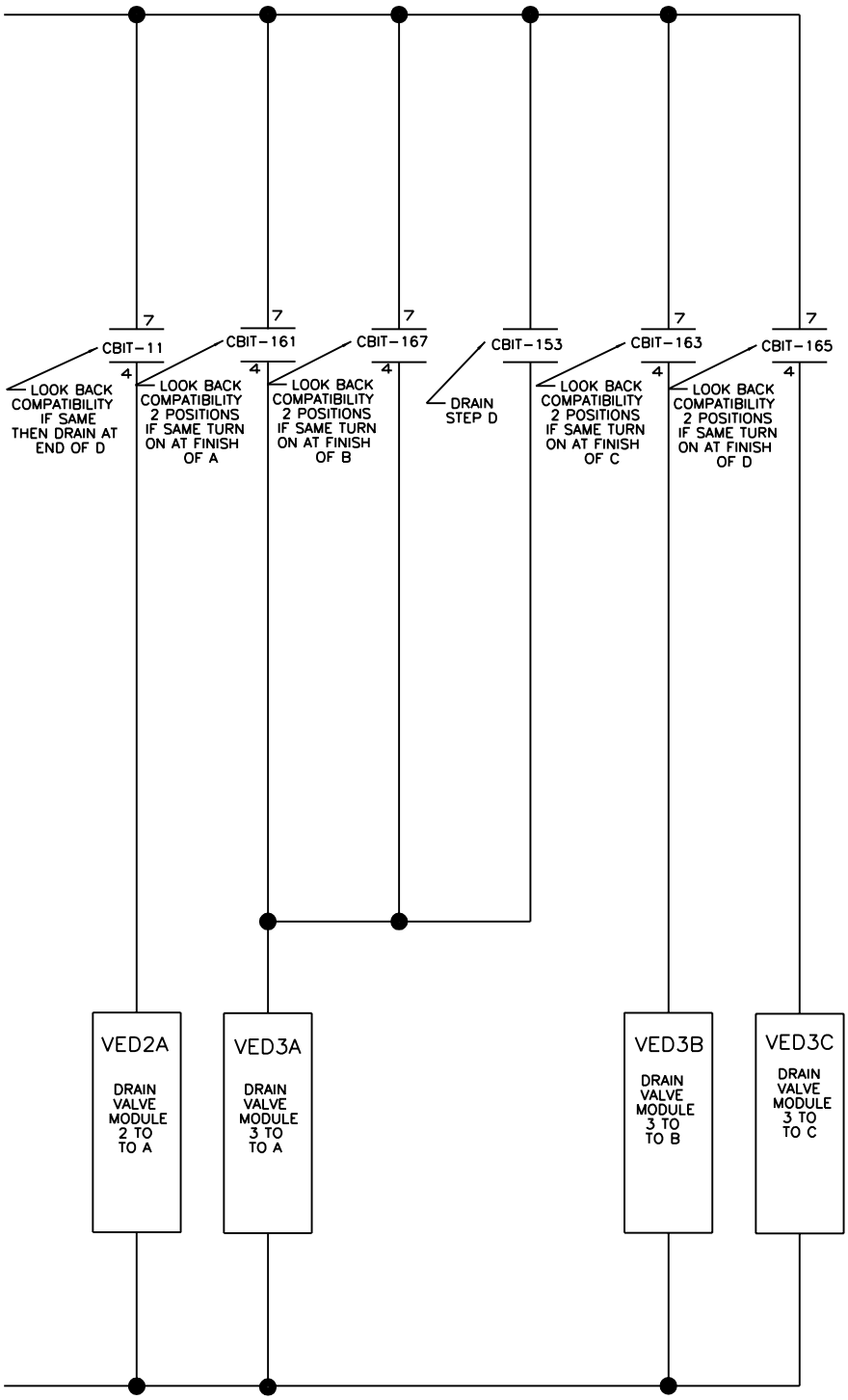

WINSMEWE
MAESTRO TANK B
CONTROL OPERATION
110V1P50HZ/120V1P60HZ
PELLERIN MILNOR CORPORATION

WINSMEWE
2004374B

WINSMEWE
2004374B

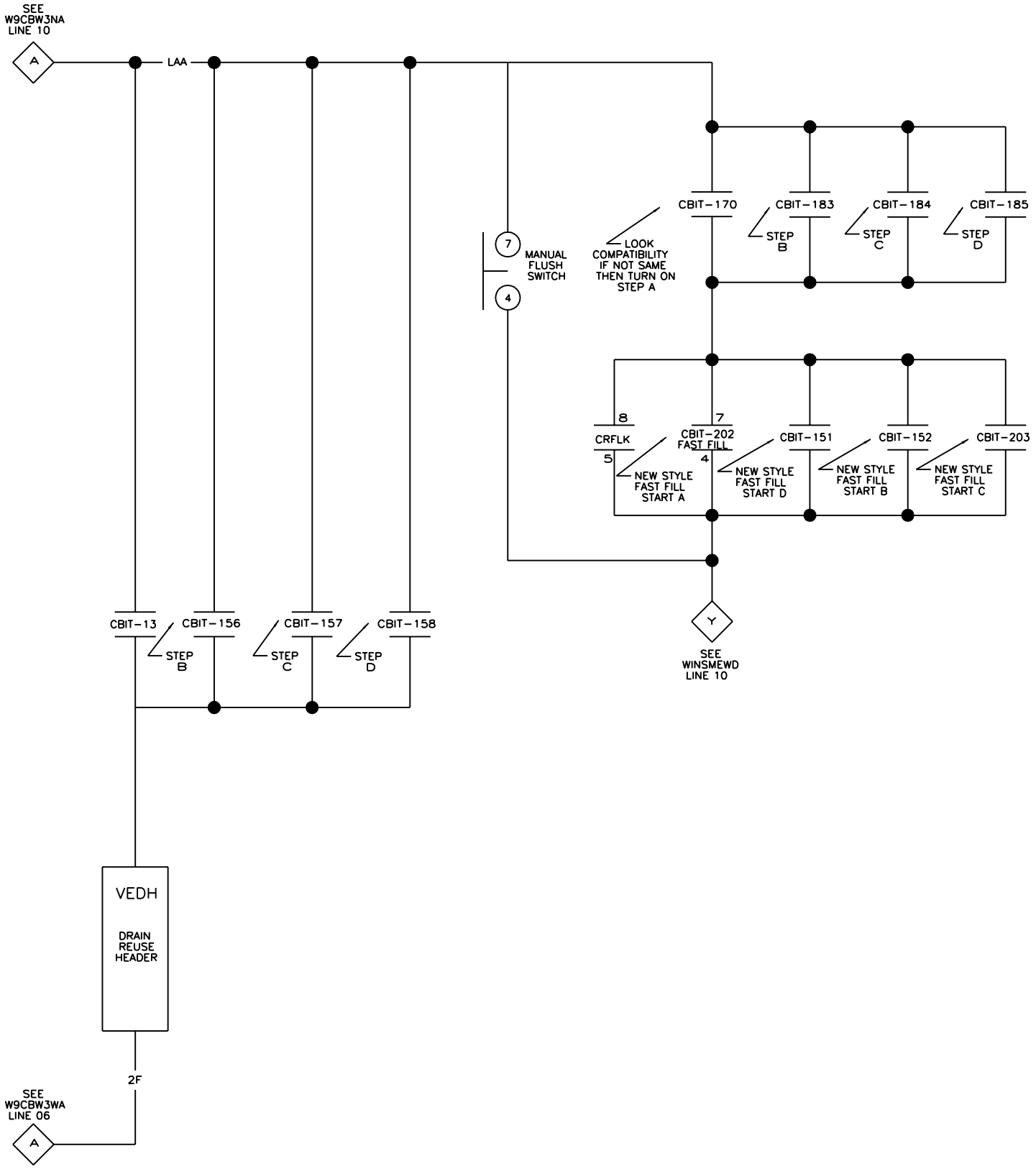

WINSMEWEA
2004374B

11

12

13

14

15

16

17

18

19

WINSMEWEA

MAESTRO TANK B
CONTROL OPERATION

110V1P50HZ/120V1P60HZ

PELLERIN MILNOR CORPORATION

WINSMEWEA
2004374B

Lint Controller 2

COMPONENT PARTS LIST

W6LINTCONP/2017444N

COMPONENT NUMBER	FUNCTION OF THIS COMPONENT	WHERE TO FIND THIS COMPONENT	MILNOR P/N	DESCRIPTION	LOCATION
	>>CONTROL BOX LAYOUTS				
01	DETAIL-ARM 7 PROCESSOR BOX	W6LINTCONT	B2T2011017	LINT CONTROLLER PROCESSOR BOX	PROCESSOR BX
02	DETAIL-CONTROL BOX	W6LINTCONT	B2T2011018	LINT CONTROLLER CONTROL BOX	CONTROL BOX
BA	**>>PRINTED CIRCUIT BOARDS**				
BAD-1	BOARD-ANALOG TO DIGITAL CONVERTER	W6LINTCON1	08BSADCT	BD:SER A-D+LOAD CELL->TESTED	CONTROL BOX
BAR	BOARD PROBE RESISTOR	W6LINTCON1	08BNCNPHAT	PROBE RESISTOR BOARD	CONTROL BOX
BDA-1	BOARD-HIGH RES D TO A CONVERTER	W6LINTCON1	08BSDACHT	BD:HI-RES SERIAL D-A->TEST	CONTROL BOX
BDVFD	BOARD-VACUUM FLOURESENT DISPLAY	W6LINTCON1	08BSEVFD5V	BD:SER VFD.2LINE-19200B-TEST	SWITCH PANEL
BIO-1	BOARD-TYPICAL 8OUT / 16 INPUT	W6LINTCON1	08BS816CT	BD:SERIAL 8OUT-16INPUT-TEST	INVERTER BOX
BMTH	BOARD-MOTHER	W6LINTCON1	08BS3MTHAT	SER 3 CARD MOTHER BD->TEST	CONTROL BOX
BPB	BOARD-186 PROCESSOR BOARD	W6LINTCON1	08BSPG1T	BD:ARM7 SERIAL PROCESSOR->TEST	INVERTER BOX
CB	**>>>CIRCUIT BREAKERS**				
CBMPFE	CIRCUIT BREAKER-LINT CONT. TO MODULE	W6LINTCON2	09FTB010T	OVERLOAD PROTECTOR ADJ.6.3-10	CONTROL BOX
CBMPFG	CIRCUIT BREAKER-MODULE TO LINT CONT.	W6LINTCON3	09FTB010T	OVERLOAD PROTECTOR ADJ.6.3-10	CONTROL BOX
CR	**>>RELAY-PILOT OR CONTROL**				
CRDRT	RELAY-DRAIN TANK	W6LINTCON4	09C024D37	4PDT MINITURE RELAY PT W/LED	CONTROL BOX
CRERP	RELAY-FILL TANK	W6LINTCON7	09C024D37	4PDT MINITURE RELAY PT W/LED	CONTROL BOX
CRFLH	RELAY-HIGH LEVEL IN TANK	W6LINTCON7	09C024E24	RELAY 4PDT DIFGLD 14PIN 24DC	CONTROL BOX
CRFLL	RELAY-TANK LOW LEVEL	W6LINTCON7	09C024E24	RELAY 4PDT DIFGLD 14PIN 24DC	CONTROL BOX
CRFLX	RELAY-LOW LEVEL IN MODULE	W6LINTCON4	09C02DDD12	09C02DDD12	CONTROL BOX
CRPFE	RELAY-ENABLE PUMPS	W6LINTCON4	09C024D37	4PDT MINITURE RELAY PT W/LED	CONTROL BOX
CRSLFT	RELAY-LINT TANK ERROR	W6LINTCON4	09C024D37	4PDT MINITURE RELAY PT W/LED	CONTROL BOX
CRSLT	RELAY-START LINT TANK OPERATION	W6LINTCON4	09C024D37	4PDT MINITURE RELAY PT W/LED	CONTROL BOX
CS	**>>CONTACTOR-MOTOR STARTER**				
CSMPFE	CONTACTOR-LINT TANK TO MODULE PUMP	W6LINTCON2	09MC08D337	23A 3P MCS CONT NR 120V5/6	CONTROL BOX
CSMPFG	CONTACTOR-MODULE TO LINT TANK	W6LINTCON3	09MC08D337	23A 3P MCS CONT NR 120V5/6	CONTROL BOX
EB	**>>BUZZER OR AUDIBLE SIGNAL**				
EBSB	BUZZER-SIGNAL	W6LINTCON4	09H015	BUZZ.115V W/6-32 CTR+6"LEADS	SWITCH PANEL
EL	**>>LIGHT-PILOT OR INDICATOR**				
EL1	LIGHT-TANK BELOW LOW LEVEL	W6LINTCON6	09J0904S37	LED LIGHT STACK 120V RD,GN,BL,AM	TOP OF CONT BX
EL2	LIGHT-MODULE LEVEL OK	W6LINTCON6	09J0904S37	LED LIGHT STACK 120V RD,GN,BL,AM	TOP OF CONT BX
EL3	LIGHT-PUMPS ON	W6LINTCON6	09J0904S37	LED LIGHT STACK 120V RD,GN,BL,AM	TOP OF CONT BX
EL4	LIGHT-LINT TANK ERROR	W6LINTCON6	09J0904S37	LED LIGHT STACK 120V RD,GN,BL,AM	TOP OF CONT BX

COMPONENT PARTS LIST

W6LINTCONP/2017444N

COMPONENT NUMBER	FUNCTION OF THIS COMPONENT	WHERE TO FIND THIS COMPONENT	MILNOR P/N	DESCRIPTION	LOCATION
ELERP	LIGHT-FILL VALVE ON	W6LINTCON7	09J060WH37	LAMP 1/2" WHITE 120V TAB WL-1050QC4	SWITCH PANEL
ES	**>>POWER SUPPLY-ELECTRONIC**				
ESPS	POWER SUPPLY	W6LINTCON1	08PSS3401T	40 WATT POWER SUPPLY TESTED	CONTROL BOX
INV	**>>INVERTER**				
INVMPFE	INVERTER-LINT TANK TO MODULE PUMP	W6LINTCON2	09MWB00996	V1000 INVERTER 9.2AMP 460V	CONTROL BOX
INVMPFG	INVERTER-MODULE TO LINT TANK	W6LINTCON3	09MWB00996	V1000 INVERTER 9.2AMP 460V	CONTROL BOX
INVRMPFE	REACTOR-LINT TANK TO MODULE PUMP	W6LINTCON2	09MX050A96	REACTOR LV/HV 3%/1.5% 5HP 460V-2HP 230V	CONTROL BOX
INVRMPFG	REACTOR-MODULE TO LINT TANK	W6LINTCON3	09MX050A96	REACTOR LV/HV 3%/1.5% 5HP 460V-2HP 230V	CONTROL BOX
LS	**>>LEVEL INPUT**				
LSL	LEVEL TRANSDUCER	W6LINTCON1	09N700E	WIKA TRANSDUCER MODEL S10 0-15PSIG 1-5	CONTROL BOX
MT	**>>MOTORS**				
MTD	MOTOR-PUMP MOTOR	W6LINTCON2	27E935B96S	PUMP VORTEX 2"X1.5" W/ 5" IMPELLER 5HP/7/	AT TANK
MTMPFG	MOTOR-PUMP MOTOR	W6LINTCON3	27E935B96S	PUMP VORTEX 2"X1.5" W/ 5" IMPELLER 5HP/7/	AT TANK
PS	**>>POWER SUPPLY-ELECTRONIC**				
PS24	POWER SUPPLY-24VDC SUPPLY	W6LINTCON7	08PSL224S	ASSY: PWR SUP 100-240VAC TO 24VDC	CONTROL BOX
SH	**>>SWITCH-HAND OPERATED**				
SHERP	SWITCH-FILL VALVE ON/OFF	W6LINTCON7	09N405M211	SWASS M2W 1NO+INC	SWITCH PANEL
SHSMA	SWITCH-MASTER	W6LINTCON6	09N405M320	SWASS M3W 2NO	SWITCH PANEL
SL	**>>SWITCH-LEVEL OPERATED**				
SLEPH	LEVEL SW-HIGH LEVEL IN LINT TANK	W6LINTCON7	09R014A	MINI-SW SPDT STAKON #V-15G-1C26-K	ON TANK
SLEPL	LEVEL SW-LOW LEVEL IN LINT TANK	W6LINTCON7	09R014A	MINI-SW SPDT STAKON #V-15G-1C26-K	ON TANK
VE	**>>VALVE-ELECTRIC OPERATED**				
VEDRLT	VALVE-DRAIN LINT TANK	W6LINTCON4	A64DV009	ASSY=4" DUMP VALVE N/C PULSE FLOW	BOTTOM OF TANK
VEPFE	VALVE-MODULE TO LINT TANK	W6LINTCON2	96TAC3AA37	1/8" N/C 3WAY 120V50/60C VALVE	ON TANK
VEPFG	VALVE-LINT TANK TO MODULE	W6LINTCON3	96TAC3AA37	1/8" N/C 3WAY 120V50/60C VALVE	PROCESSOR BX
VERP	VALVE-FILL TANK	W6LINTCON7	96TAC3AA37	1/8" N/C 3WAY 120V50/60C VALVE	PROCESSOR BX
WF	**>>METER-WATER**				
WFMG1	METER-MAGNETIC FLOW	W6LINTCON5	30F580	8041 BLIND UNIT MAG SENSOR SHORT FINGE	AT TANK
WFMG1D	METER-DISPLAY FOR MAGNETIC FLOW	W6LINTCON5	30F580A	8025 LOWFLOW WALL-MNT TRANSMIT	AT TANK

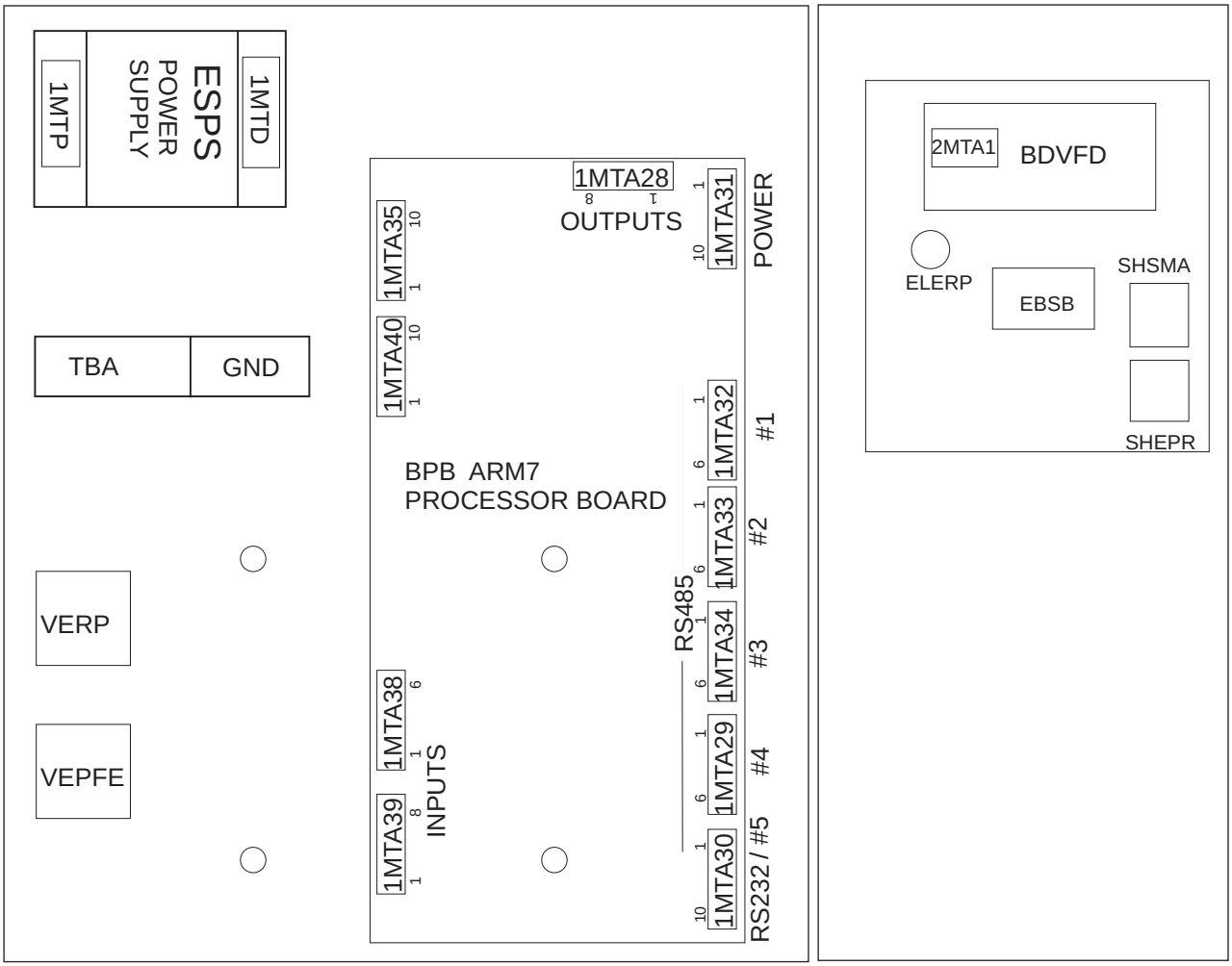

MICRO 6 SYSTEMS
LINT CONTROLLER
ARM 7 PROCESSOR BOX

PELLERIN MILNOR CORPORATION

B2T2011017
2017444A

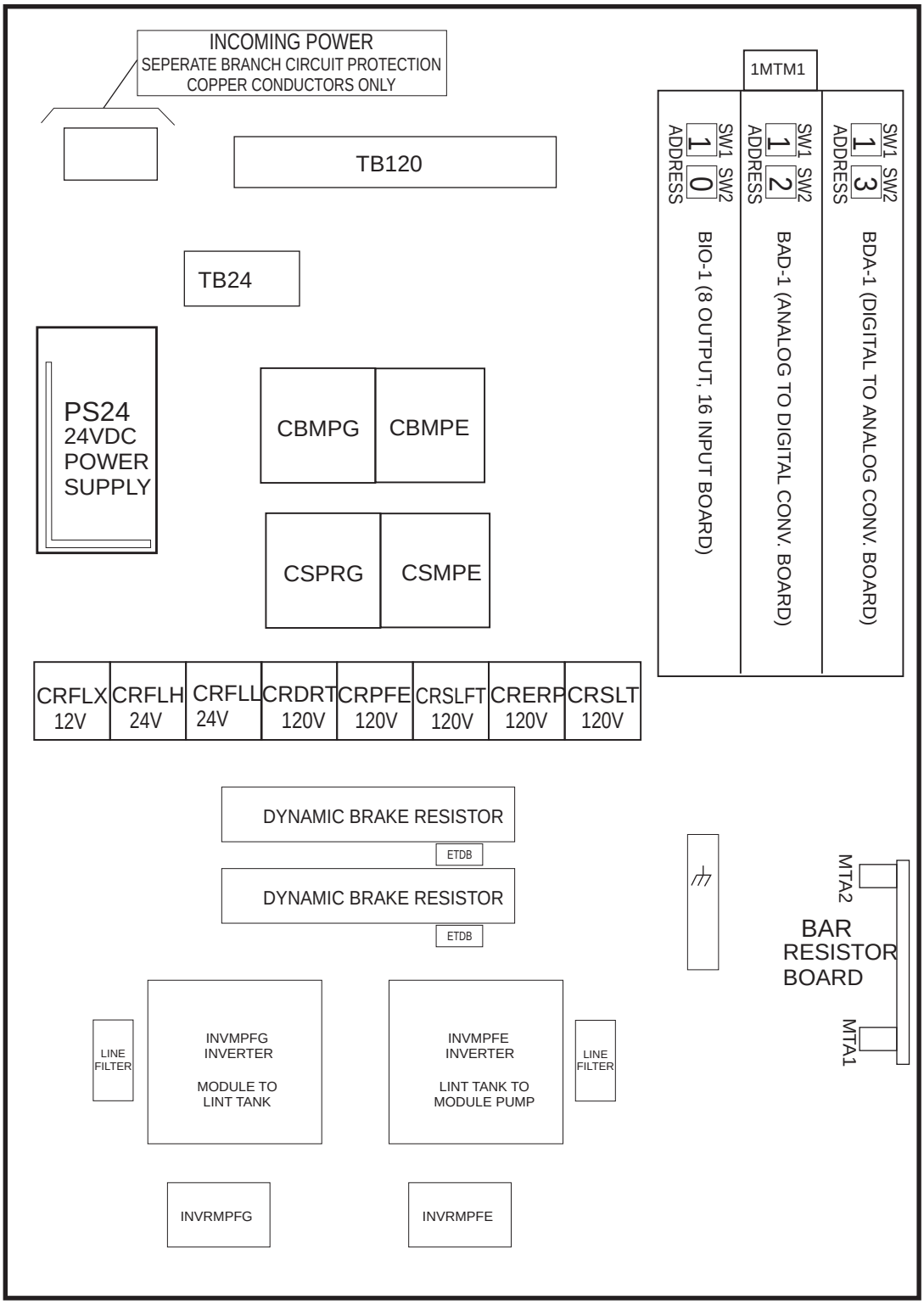

MICRO 6 SYSTEMS
LINT CONTROLLER
PELLERIN MILNOR CORPORATION

B2T2011018
2017444A

W6LINTCONT
MICRO 6 SYSTEMS
CONTROL BOX LAYOUTS FOR
LINT CONTROLLER
PELLERIN MILNOR CORPORATION

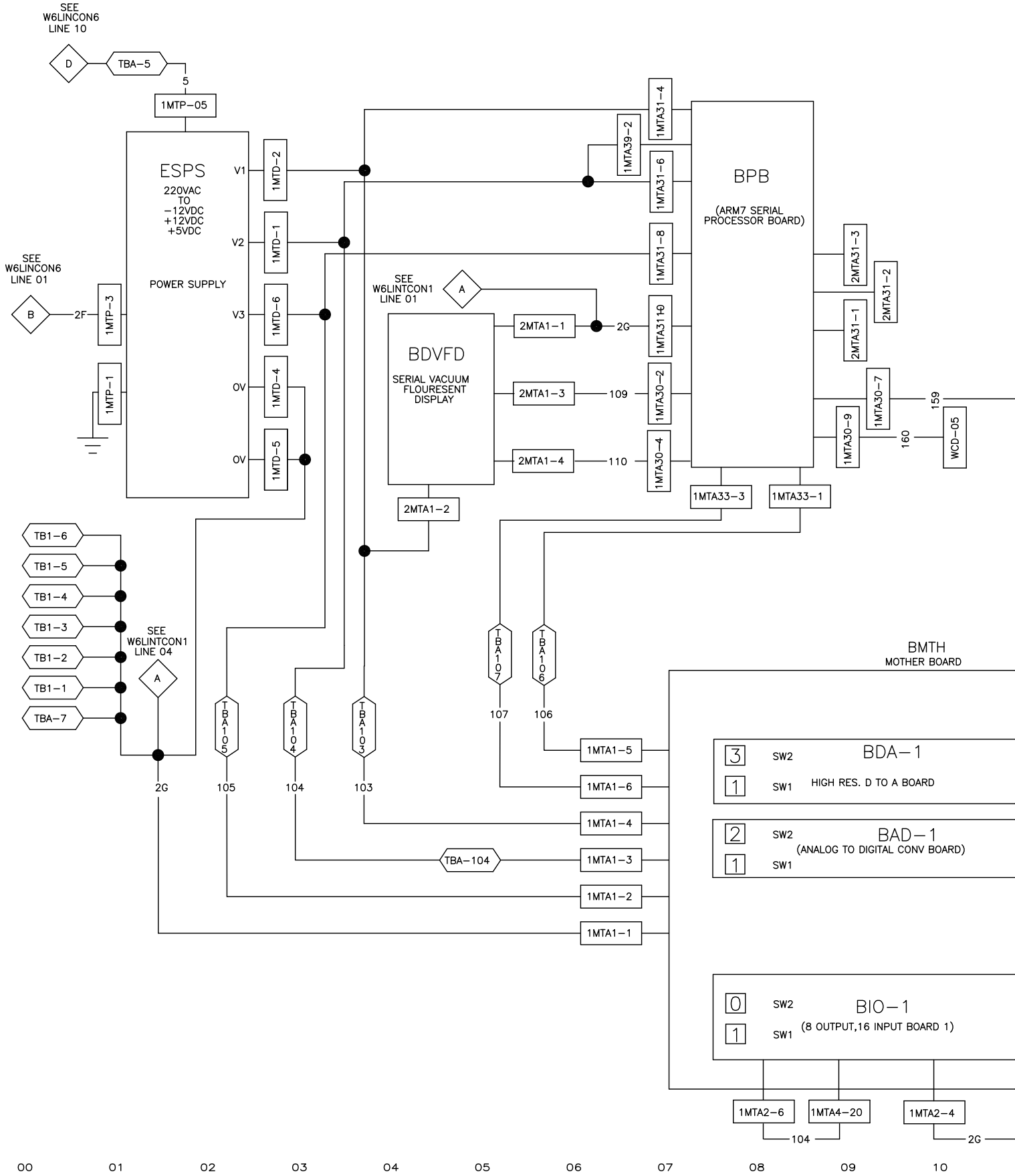
SEE W6LINCON6 LINE 10
D
TBA-5
5
1MTP-05
ESPS
220VAC TO -12VDC +12VDC +5VDC
POWER SUPPLY
V1
V2
V3
OV
OV
1MTD-2
1MTD-1
1MTD-6
1MTD-4
1MTD-5
SEE W6LINCON6 LINE 01
B
2F
1MTP-3
1MTP-1
SEE W6LINTCON1 LINE 01
A
BDVFD
SERIAL VACUUM FLOURESENT DISPLAY
2MTA1-1
2MTA1-3
2MTA1-4
2MTA1-2
2G
109
110
1MTA39-2
1MTA31-4
1MTA31-6
1MTA31-8
1MTA31-10
1MTA30-2
1MTA30-4
BPB
(ARM7 SERIAL PROCESSOR BOARD)
2MTA31-3
2MTA31-2
2MTA31-1
1MTA30-7
1MTA30-9
159
160
WCD-05
1MTA33-3
1MTA33-1
TB1-6
TB1-5
TB1-4
TB1-3
TB1-2
TB1-1
TBA-7
SEE W6LINTCON1 LINE 04
A
TBA105
TBA104
TBA103
TBA107
TBA106
107
106
2G
105
104
103
BMTH
MOTHER BOARD
1MTA1-5
1MTA1-6
1MTA1-4
1MTA1-3
1MTA1-2
1MTA1-1
TBA-104
3 SW2
1 SW1
BDA-1
HIGH RES. D TO A BOARD
2 SW2
1 SW1
BAD-1
(ANALOG TO DIGITAL CONV BOARD)
0 SW2
1 SW1
BIO-1
(8 OUTPUT,16 INPUT BOARD 1)
1MTA2-6
1MTA4-20
1MTA2-4
104
2G
00
01
02
03
04
05
06
07
08
09
10
W6LINTCON1
2017444B

WIRE NO.	VOLTAGE	WIRE COLOR
103	+5VDC	BLUE/RED
104	+12VDC	BLUE/ORANGE
105	−12VDC	BLUE/BLACK
7	GROUND	BLUE/WHITE
107	SERIAL HIGH	BLUE/RED
106	SERIAL LOW	BLUE/BLACK
INPUTS	−	BLUE/BLACK
5	240VAC	RED
6	240VAC	RED/WHITE

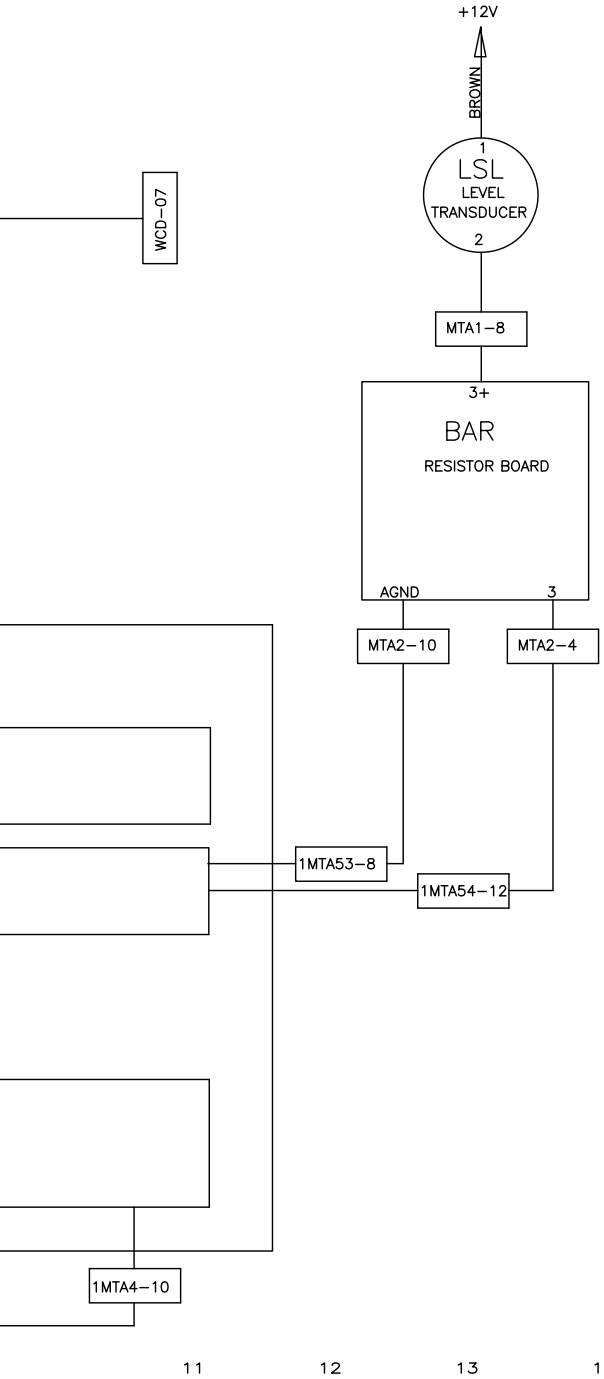

W6LINTCON1

MICRO 6 SYSTEMS SERIAL CONTROLS
ARM7
SCHEMATIC: BOARD TO BOARD WIRING
LINT CONTROLLER

PELLERIN MILNOR CORPORATION

NOTES:

1. 1MTP, 1MTD ARE LOCATED ON ESPS (POWER SUPPLY).
2. 1MTA31, 1MTA33, 2MTA31, 1MTA34, 1MTA30, AND 1MTA39 ARE LOCATED ON BPB (186 PROCESSOR BOARD).
3. 1MTA2, 1MTA3,AND 1MTA4 ARE LOCATED ONBIO−1(8 OUTPUT−16INPUT BOARD).
4. 1MTA1 IS LOCATED BMTH (MOTHER BOARD).
5. 1MTA54 IS LOCATED ON BAD−1 (ANALOG TO DIGITAL BOARD).
6. 2MTA1 IS LOCATED ON BDVFD (SERIAL VACUUM FLOURESENT DISPLAY).
7. TBP IS LOCATED IN LOW VOLTAGE CONTROL BOX.
8. TBI IS LOCATED IN THE PROCESSOR BOX.

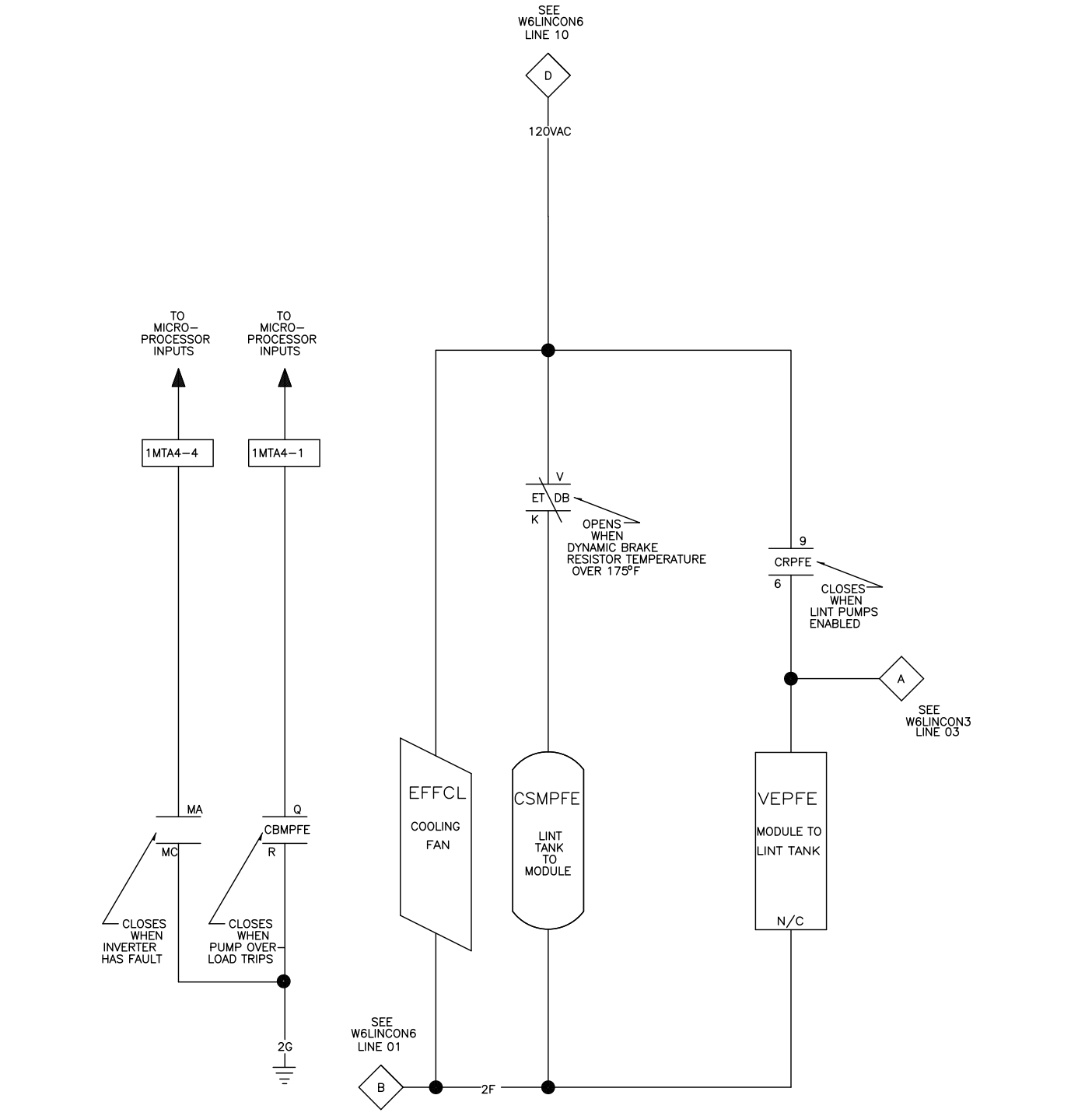

W6LINTCON2
2017473B

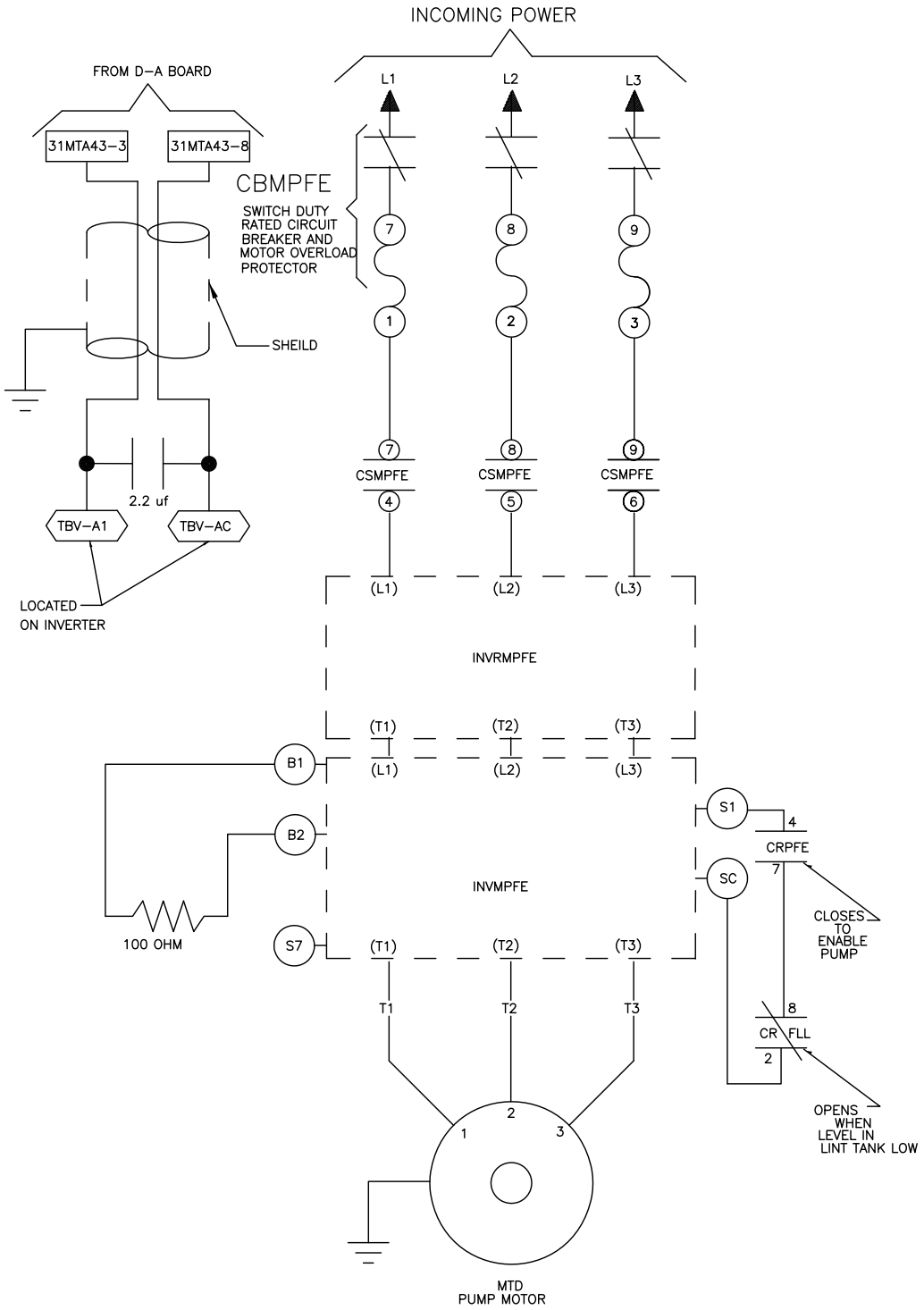

W6LINTCON2

MICRO 6 SYSTEMS SERIAL CONTROLS
ARM7
SCHEMATIC: LINT TANK TO MODULE PUMP
LINT CONTROLLER

PELLERIN MILNOR CORPORATION

11 12 13 14 15 16 17 18 19

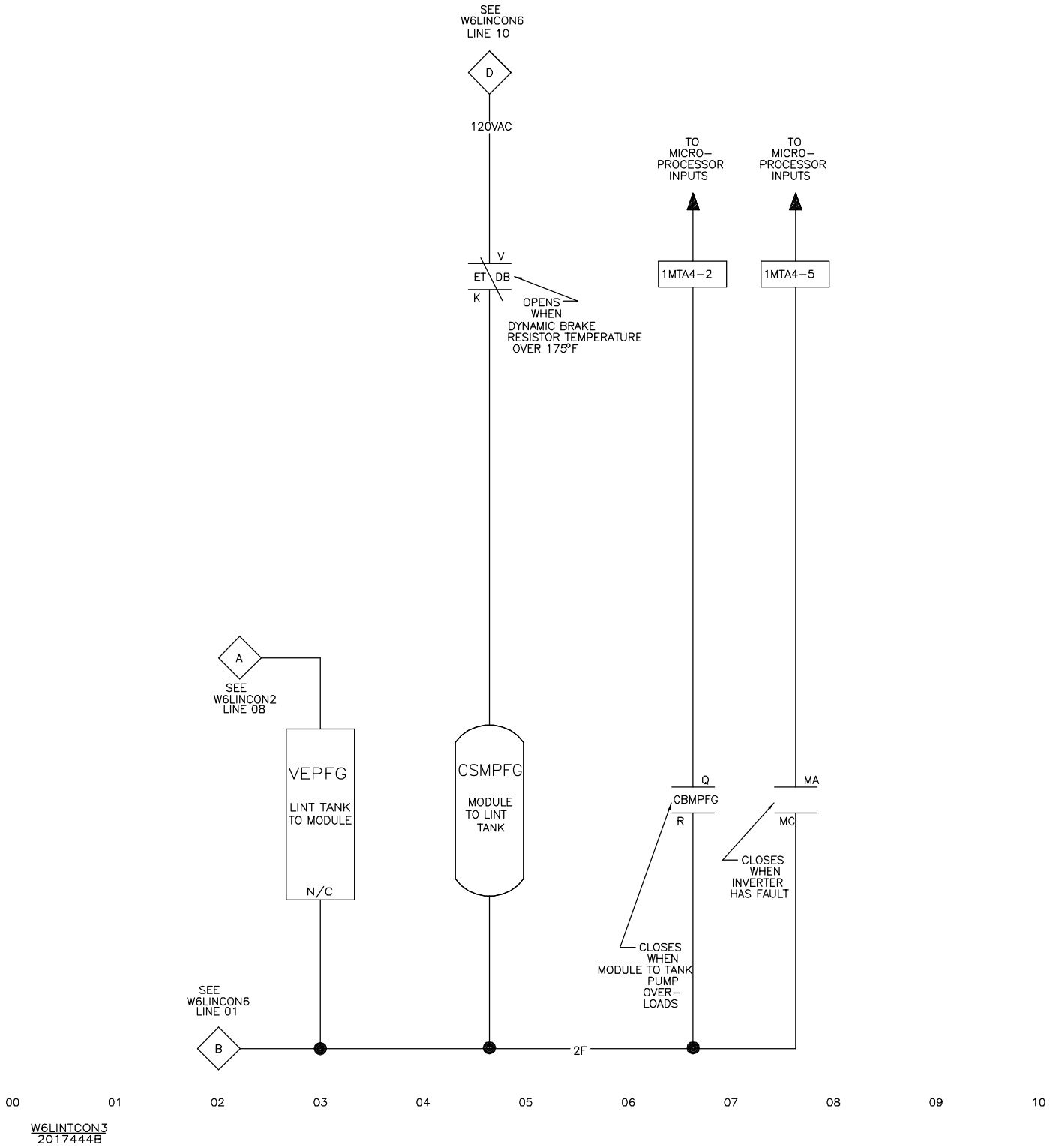
SEE
W6LINCON6
LINE 10
D
120VAC
TO
MICRO–
PROCESSOR
INPUTS
TO
MICRO–
PROCESSOR
INPUTS
V
ET
DB
K
1MTA4–2
1MTA4–5
OPENS
WHEN
DYNAMIC BRAKE
RESISTOR TEMPERATURE
OVER 175°F
A
SEE
W6LINCON2
LINE 08
VEPFG
LINT TANK
TO MODULE
N/C
CSMPFG
MODULE
TO LINT
TANK
Q
CBMPFG
R
MA
MC
CLOSES
WHEN
INVERTER
HAS FAULT
CLOSES
WHEN
MODULE TO TANK
PUMP
OVER–
LOADS
SEE
W6LINCON6
LINE 01
B
2F
00
01
02
03
04
05
06
07
08
09
10
W6LINTCON3
2017444B

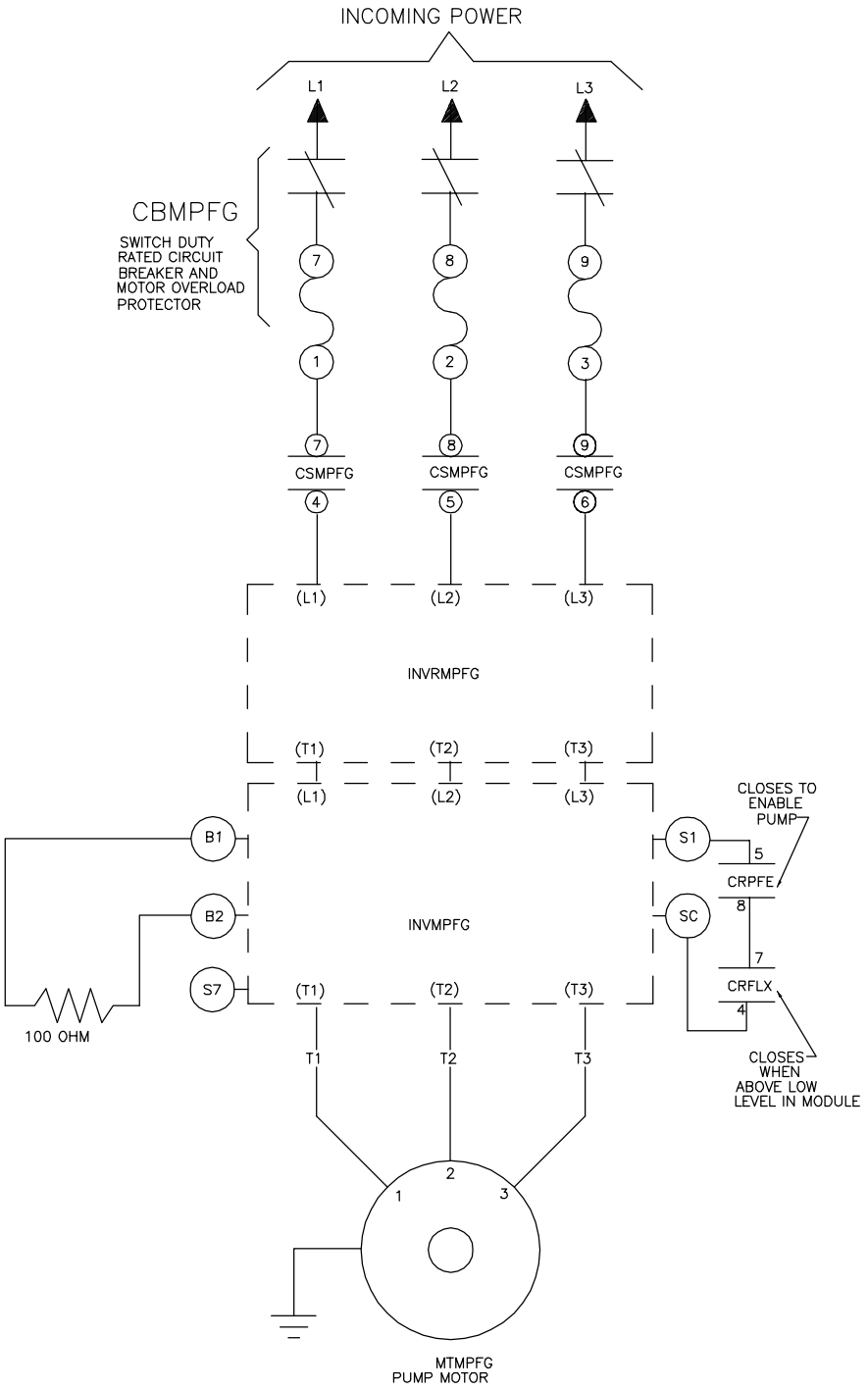

W6LINTCON3

MICRO 6 SYSTEMS SERIAL CONTROLS
ARM7
SCHEMATIC: MODULE TO LINT TANK
LINT CONTROLLER

PELLERIN MILNOR CORPORATION

11 12 13 14 15 16 17 18 19

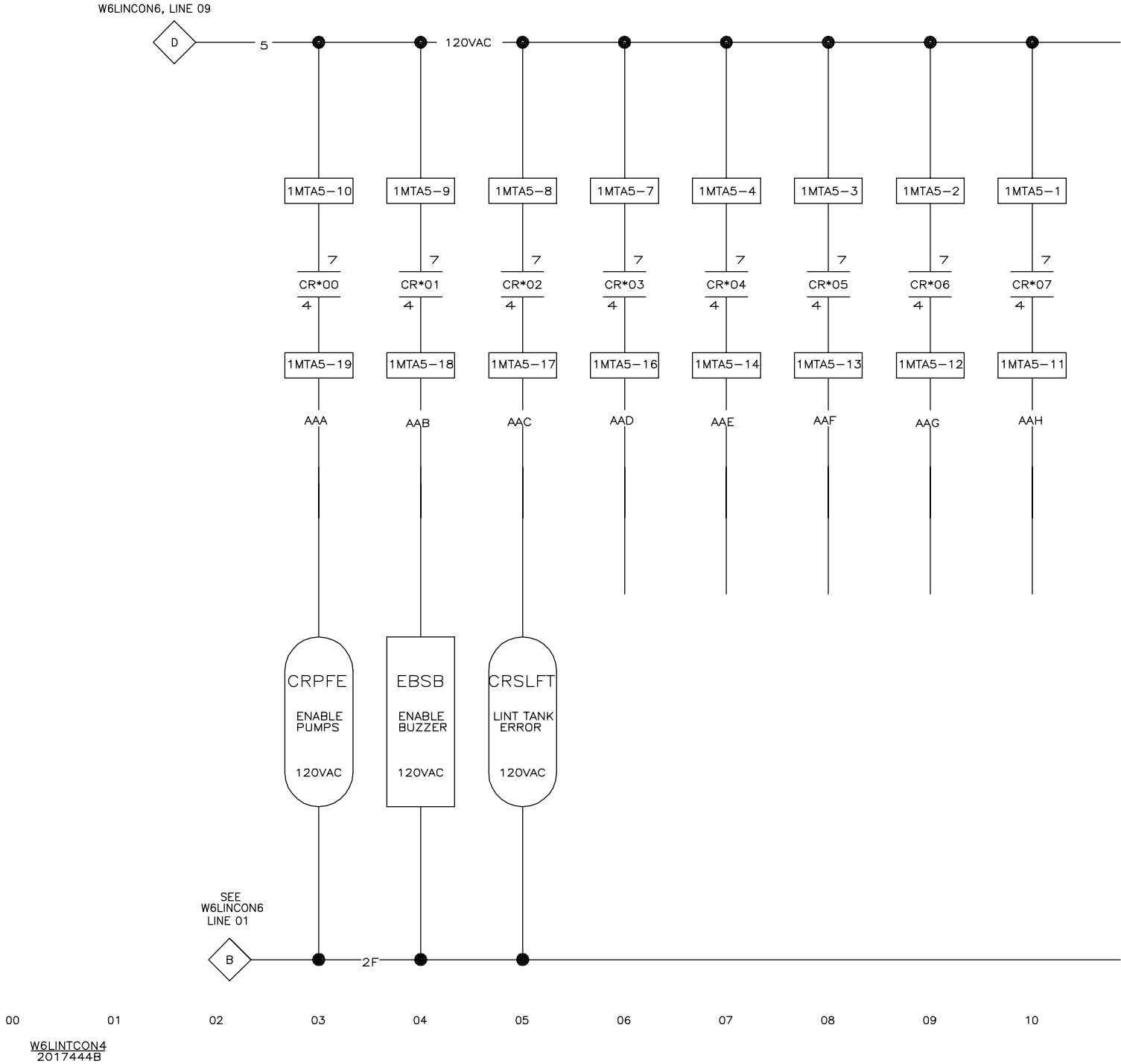

W6LINTCON4
2017444B

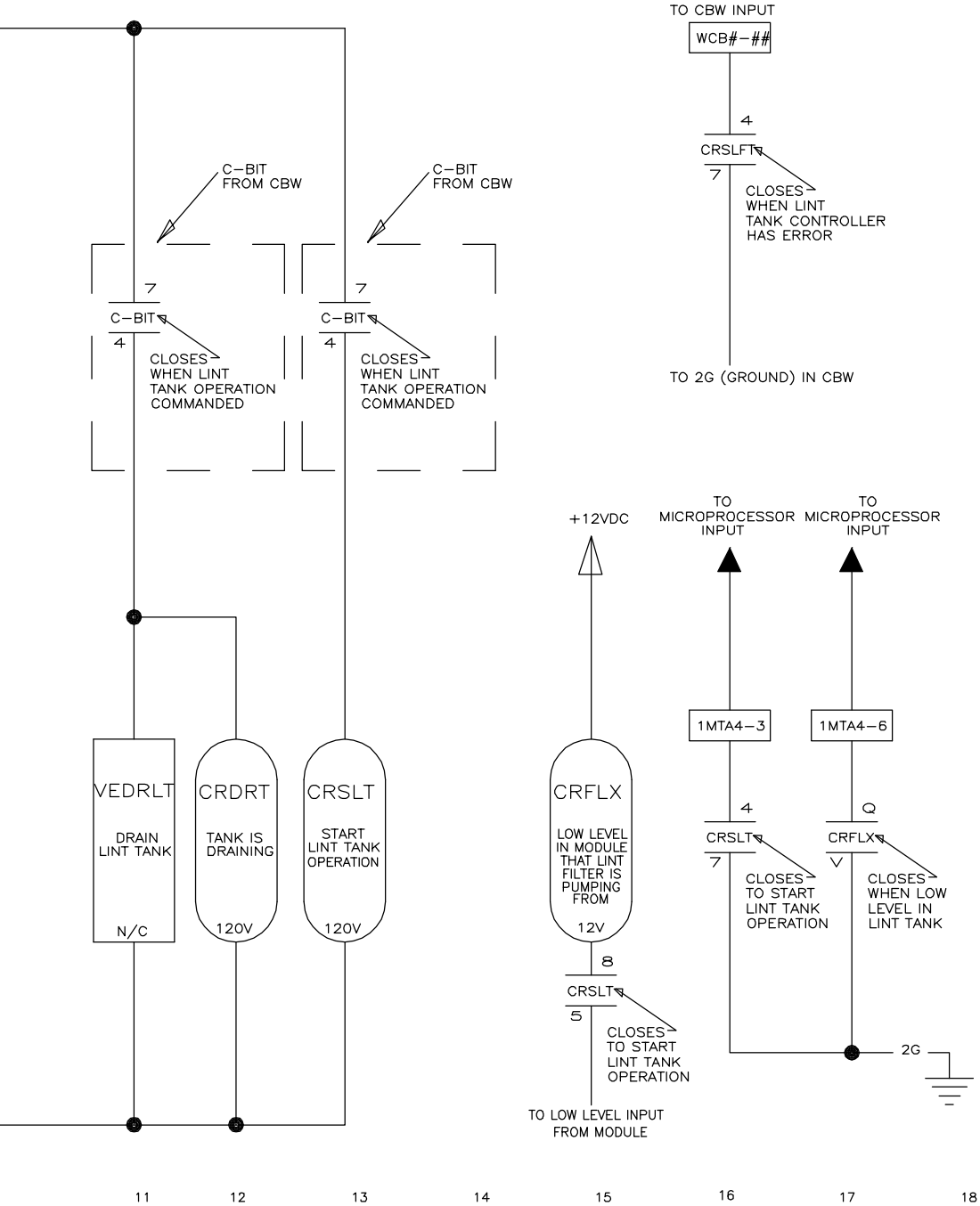

W6LINTCON4

MICRO 6 SYSTEMS SERIAL CONTROLS
ARM7
SCHEMATIC: INPUTS/OUTPUTS
LINT CONTROLLER

PELLERIN MILNOR CORPORATION

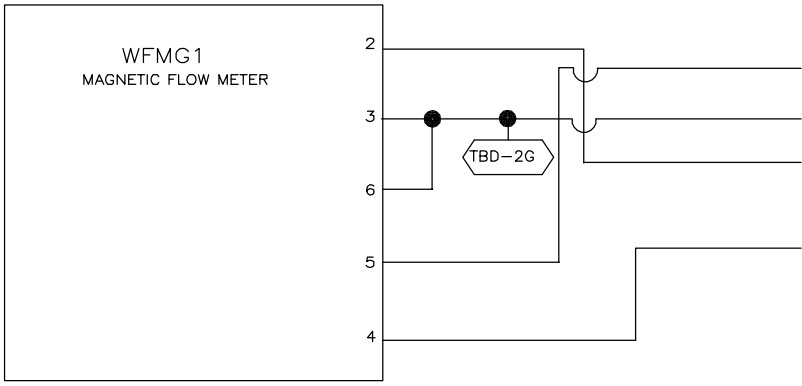

00 01 02 03 04 05 06 07 08 09 10

W6LINTCON5
2017444B

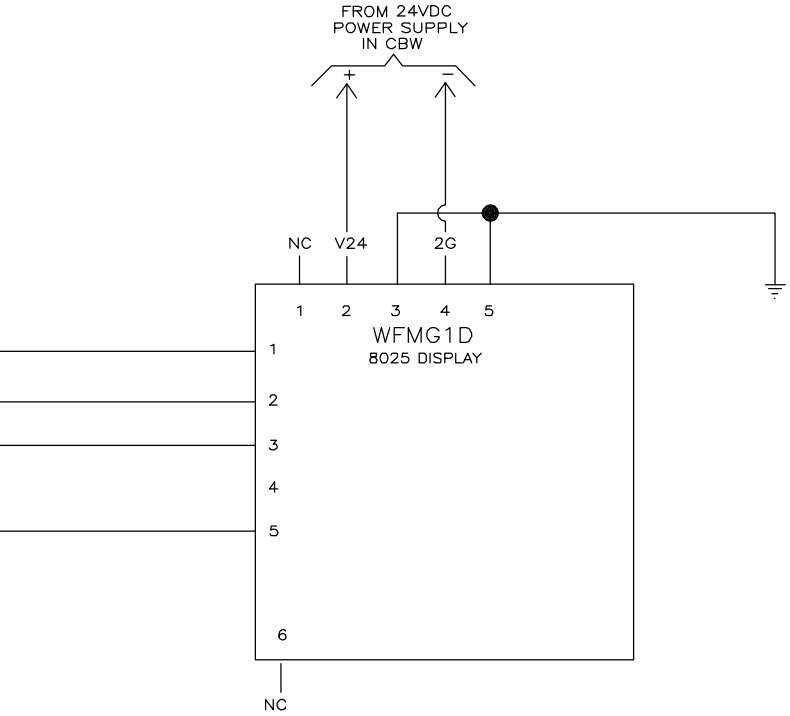

W6LINTCON5

MICRO 6 SYSTEMS SERIAL CONTROLS
ARM7
SCHEMATIC: MAGNETIC FLOW METER
LINT CONTROLLER

PELLERIN MILNOR CORPORATION

11 12 13 14 15 16 17 18 19

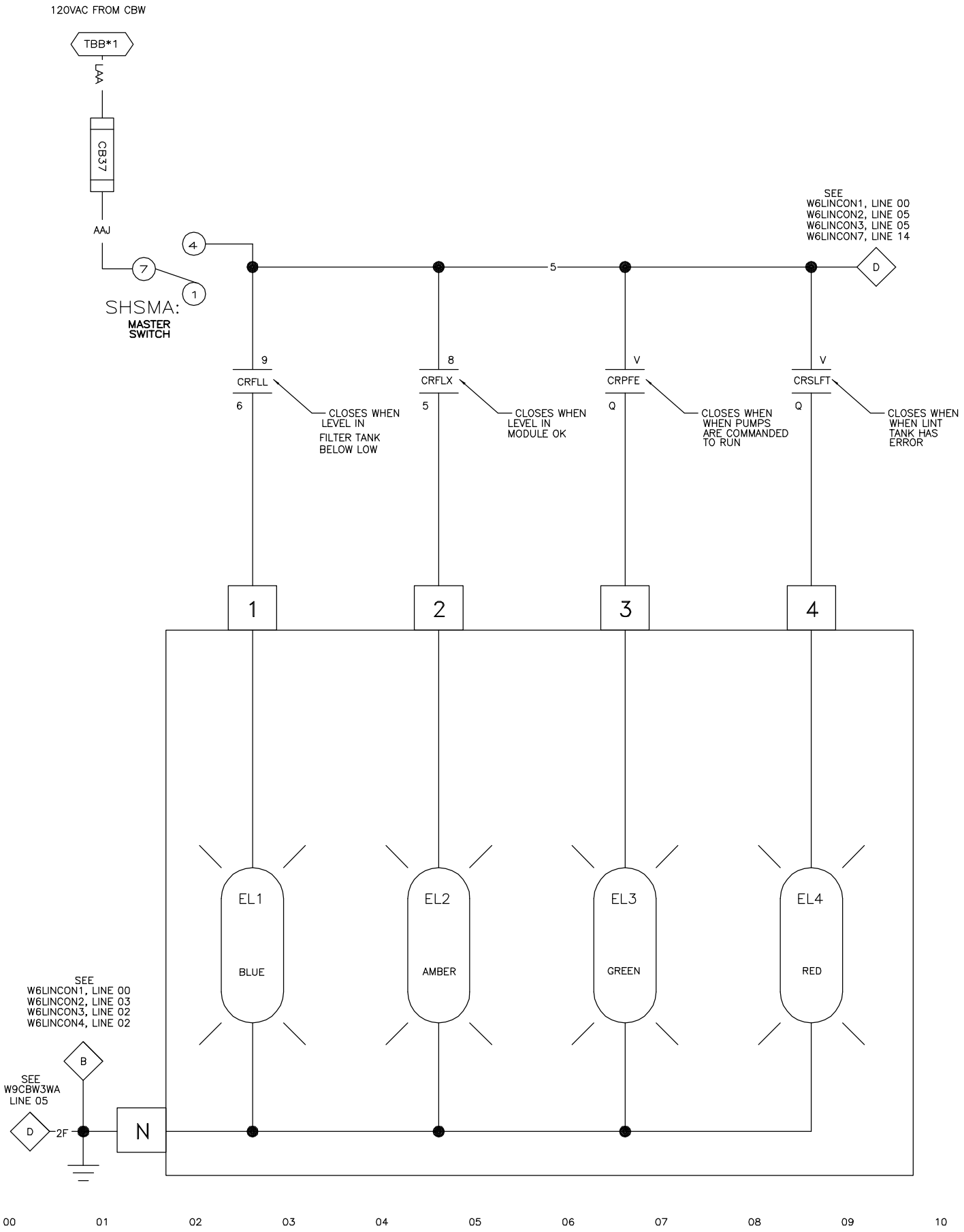

W6LINTCON6
2017444B

11

12

13

14

15

16

17

18

19

W6LINTCON6

MICRO 6 SYSTEMS SERIAL CONTROLS
ARM7
SCHEMATIC: LIGHT STAND
LINT CONTROLLER

PELLERIN MILNOR CORPORATION

W6LINTCON6
2017444B

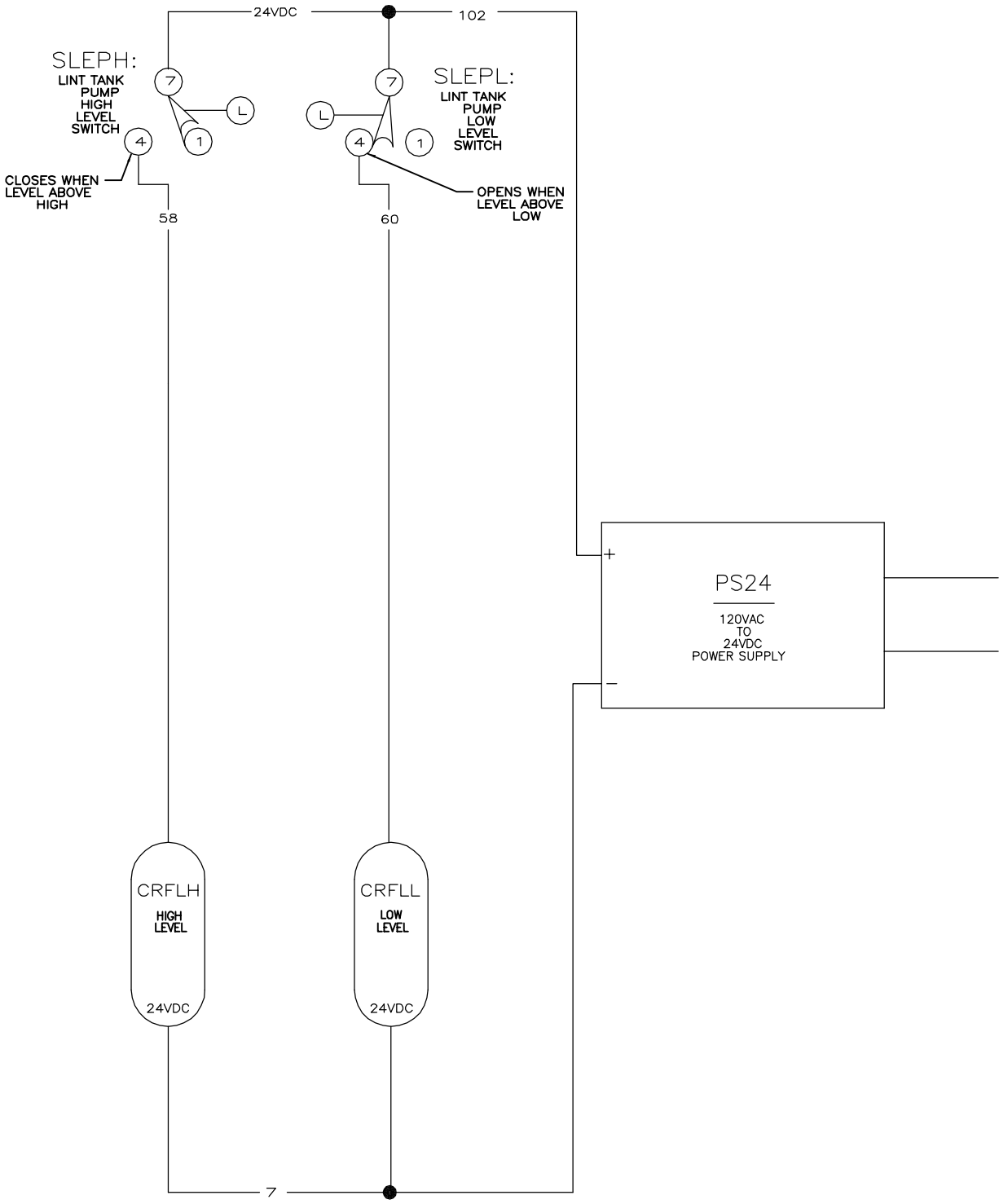

00 01 02 03 04 05 06 07 08 09 10

W6LINTCON7
2017444B

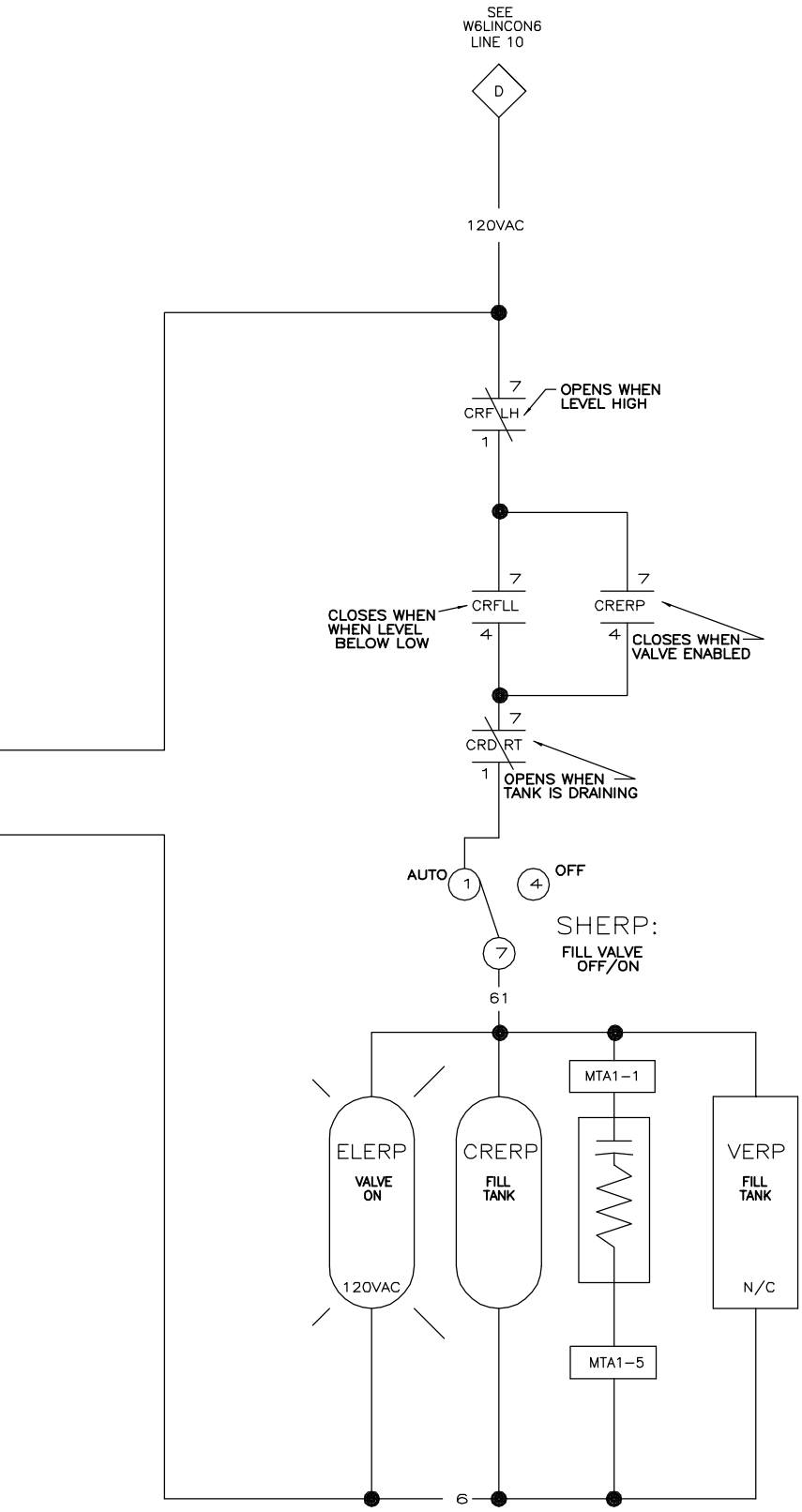

W6LINTCON7

MICRO 6 SYSTEMS SERIAL CONTROLS
ARM7
SCHEMATIC: LINT TANK LEVEL
LINT CONTROLLER

PELLERIN MILNOR CORPORATION

11 12 13 14 15 16 17 18 19