Published Manual Number/ECN: MAPMP1AXCE/2025336D
- Publishing System: TPAS2
- Access date: 10/20/2025
- Document ECNs: NOT latest

Service & Mechanical Parts

MP1A03, MP1A50, MP1A56

CL, CR, L, R

Read the separate safety manual before installing, operating, or servicing

PELLERIN MILNOR CORPORATION POST OFFICE BOX 400, KENNER, LOUISIANA 70063-0400, U.S.A.

Table of Contents
MAPMP1AXCE/25336D

Page	Description	Document
1	About This Service Manual	BIUUUM05/20081125
3	Part 1: Standard Maintenance Procedures	BMP060040/2006324A
4	Table of Contents	MTPPMM03/20101202
107	Part 2: Mechanical Parts and Repair Procedures	BMP060041/2006324A
108	Limited Standard Warranty	BMP720097/2019036
109	How to Get the Necessary Repair Components	BIUUUD19/20081231
110	Tag Guidelines	BIUUUI02PP/20170824
116	Safety Placard Use and Placement - MP15xx, MPL5xx, MP16xx, MPL6xx, MP1Axx	BMP040036/2020275B
118	Safety Placard Use and Placement ISO - MP15xx, MPL5xx, MP16xx, MPL6xx, MP1Axx	BMP040037/2020275B
120	Torque Requirements for Fasteners	BIUUUM04/20180109
129	**1. Housing Assemblies**	
130	Guards, Covers & Cosmetics MP1A03	BMP050018/2008172B
133	Can Safety Stands and Diaphragm Bar	BMP980018/2008143B
135	Ship With	BMP050068/2008173B
137	Safety Unload Door Assembly	BMP980012/2005352B
138	Frame Assembly	BMP070010/2008053B
140	Reuse Tanks	BMP070039/2008084B
143	**2. Hydraulic Piping and Assemblies**	
144	Hydraulic Schematic MP1550, MP1603, MP1604, MP1A03	BMP010007/2025336B
146	Hydraulic Power Unit Installation MP1A03CL,CR,L,R	BMP050011/2007416B
152	Hydraulic Tank Assembly MP1A03CL,CR,L,R	BMP050015/2007416B
156	Proportional Valve MP1A03CL,CR,L,R	BMP050012/2007416B
157	Main Press Mainifold MP1A03CL,CR,L,R	BMP050014/2007416B
160	Hydraulic Main Pump Assembly	BMP050013/2008336B
162	Prefill Valve & Fittings MP1A03CL,CR,L,R	BMP050017/2007416B
165	Oil Recirculation Cooler & Fittings MP1A03CL,CR,L,R MP1604CL,CR,L,R (High Flow & 600 Volt)	BMP050010/2007416B
167	Gage Assembly MP1603CL,CR,L,R MP1604CL,CR,L,R MP1A03CL,CR,L,R	BMP050016/2007416B
168	Hydraulic Ram and Diaphragm Assembly - MP1601, MP1602, MP1604, MP1604 & MP1A03 CL, CR, L, R	BMP080033/2011196B
171	Scupper Load Chute	BMP070037/2008084B
173	Receiving Chute and Can	BMP050066/2008084B
176	Can Counter Balance Valves & Fittings	BMP980017/2008166B
179	**3. Pneumatic Piping and Assemblies**	
180	Pneumatic Schematic - MP1601, MP1602, MP1603, MP1604 & MP1A03 CL, CR, L R	BMP980020/2011196B

Table of Contents, continued
MAPMP1AXCE/25336D

Page	Description	Document
183	**4. Conveyor Assemblies**	
184	Conveyor Installation	BMP980013/2007315B
187	Unload End Drive Assembly	BMP980014/2006322B
191	Load End Rollers & Belt Tracking	BMP980015/2023396B

BIUUUM05 (Published) Book specs- Dates: 20081125 / 20081125 / 20081125 Lang: ENG01 Applic: UUU

About This Service Manual

1. For Presses With a Gum Rubber-filled Diaphragm

The single stage presses covered by this service manual will use a gum rubber-filled diaphragm. Milnor began using gum-rubber in diaphragms on these machines in October 2008. This method of maintaining diaphragm shape does not affect press components or design. As of this writing, no model changes have occurred as a result of this new method. Although Milnor recommends gum rubber for ease of maintenance, your machine can use water in the diaphragm instead. **This manual does not include the maintenance procedures for water-filled diaphragms.** If you require the water-filled method, please request these maintenance procedures from Milnor.

2. This Is a Two-part Manual

This service manual is divided into two parts—**each with its own table of contents:**

2.1. Part 1: Standard Maintenance Procedures—These include:

- Safety procedures and hazard information for service personnel. **Read before attempting any servicing.**
- Routine maintenance such as scheduled, preventive maintenance and corrective maintenance procedures that can arise as a result of normal wear and operational errors.
- Mechanical troubleshooting, testing, and related servicing.

This part is subdivided into numbered sections (topics and sub-topics) that do not necessarily begin on a new page. **The table of contents for Part 1 references section numbers, not page numbers.**

2.2. Part 2: Mechanical Parts and Repair Procedures—These include:

- Parts documents that depict machine assemblies (sub-systems), identify their components, and in some cases, show how they are assembled or provide related service instructions.
- Procedures for certain types of repairs that may not be straightforward for the service technician.

This part is subdivided into sections corresponding to types of machine assemblies (e.g., housing, pneumatic, etc.) and within each section, documents that always begin on a new page. **The table of contents for Part 2 references page numbers.**

3. Where Other Service Information is Located

This manual provides information on mechanical servicing. Electrical servicing and parts information is provided in the separate **electrical schematic manual.** Many service procedures require service personnel to operate the machine manually. Instructions on manual operation are provided in the separate **reference manual.** A complete set of manuals is provided with the machine, either on CD or in printed form.

4. Contacting Milnor® [Document BIUUUK06]

Your authorized Milnor dealer can assist you with any aspect of your Milnor machine and is familiar with local conditions that may be pertinent to its installation, use, or maintenance. Always contact your dealer first. Should you or your dealer need assistance from the Milnor factory, refer to Table 1 for contact information.

Table 1: Pellerin Milnor Corporation Contact Information

Purpose	Department	Telephone	FAX	E-mail/Website
Order, or enquire about replacement parts	Parts	504-467-2787	504-469-9777	parts@milnor.com
Obtain advice on installing, servicing, or using	Customer Service/ Technical Support	504-464-0163	504-469-9777	service@milnor.com www.milnor.com (Customer Service)
Learn about, request, or enroll in Milnor service seminars	Training	504-712-7725	504-469-9777	training@milnor.com
Determine warranty eligibility or claim status	Warranty Administration	504-712-7735	504-469-9777	service@milnor.com (Attention: Warranty)
Ask about, comment on, or report an error in equipment manuals	Technical Publications	504-712-7636	504-469-1849	techpub@milnor.com

Your first contact with any question should be your authorized Milnor dealer, but problems or special situations encountered in the field may require consultation with the Milnor factory. Written correspondence can be mailed to this address:

Pellerin Milnor Corporation
Post Office Box 400
Kenner, Louisiana 70063-0400
Telephone: 504-467-9591
http://www.milnor.com

— End of BIUUUM05 —

Part 1

Standard Maintenance Procedures

A table of contents follows this page. Locate information by section number, not page number.

BMP060040/2006324A

Table of Contents

Sections	Figures, Tables, and Supplements

Chapter 1. Safety for Service Personnel

1.1. Safety—Single Stage Membrane Press (Document BIUUUS27)

1.1.1. General Safety Requirements—Vital Information for Management Personnel (Document BIUUUS04)

1.1.1.1. Laundry Facility

1.1.1.2. Personnel

1.1.1.3. Safety Devices

1.1.1.4. Hazard Information

1.1.1.5. Maintenance

1.1.2. Safety Alert Messages—Internal Electrical and Mechanical Hazards (Document BIUUUS11)

1.1.3. Safety Alert Messages—External Mechanical Hazards (Document BIUUUS12)

1.1.4. Safety Alert Messages—Unsafe Conditions (Document BIUUUS14)

1.1.4.1. Damage and Malfunction Hazards

1.1.4.1.1. Hazards Resulting from Inoperative Safety Devices

1.1.4.1.2. Hazards Resulting from Damaged Mechanical Devices

1.1.4.2. Careless Use Hazards

1.1.4.2.1. Careless Operation Hazards—Vital Information for Operator Personnel (see also operator hazards throughout manual)

1.1.4.2.2. Careless Servicing Hazards—Vital Information for Service Personnel (see also service hazards throughout manuals)

1.2. Safe Servicing—Vital Information for Personnel Who Maintain and Service the Single Stage Press (Document BIPPMS01)

1.2.1. Automated Laundering System Hazards

1.2.2. Door Interlock Bypass Hazards

1.2.3. Top-of-press Hazards

1.2.4. Hydraulic System Hazards

1.2.5. Risks When Using *Manual* Mode

1.2.6. Risks from Inattention to Maintenance or Alarms

1.3. SAFETY ALERT for Owner/Managers and Maintenance Personnel: Using the Door Interlock Bypass Key Switch (Document BICP1S01)

Figure 1: Door Interlock Bypass Key Switch and Safety Placard

Sections	Figures, Tables, and Supplements
1.4. How To Use the Safety Stands and Safety Bars on Single-stage Press (Document BIUUUS06)	Figure 2: Safety Stands for Single-stage Press Models Figure 3: Safety Bars for Single-Stage Press Models
Chapter 2. Routine Maintenance	
2.1. Single Stage Press Preventive Maintenance (Document BIPPMM05)	
2.1.1. Lubricant Specifications	Table 1: Lubricant Specifications
2.1.2. Preventive Maintenance Schedule and Maintenance Locations	Table 2: Preventive Maintenance Schedule Figure 4: Primary Hydraulic Gauges Figure 5: Prefill Pilot Pressure Gauge Figure 6: Recirculation filter (MP1Axxxx models) Figure 7: Miscellaneous hydraulic oil maintenance items Figure 8: Breather/Moisture Filter Figure 9: Discharge door pressure regulator, gauge Figure 10: Conveyor maintenance items
2.1.3. About the Press Hydraulic Oil	
2.1.3.1. Inspect Oil	Table 3: Assessing Oil Quality
2.1.3.2. Air Leaks In the Hydraulic System	
2.1.3.2.1. Symptoms	
2.1.3.2.2. Causes	
2.1.3.2.3. How to Test for Air Leaks	
2.1.3.3. Oil Add and Change Procedure	
2.1.4. Testing the Suppressor Pre-charge	Figure 11: Suppressor Charging and Pressure Testing Items
2.2. The Installation and Replacement of the Diaphragm and Gum Rubber for the 1-Station Membrane Press (Document BIPPMM17)	
2.2.1. Get the necessary personnel and materials.	Table 4: The Components for the Replacement of the Diaphragm and Gum Rubber
2.2.2. Remove the used diaphragm.	Figure 12: Diaphragm Bolts and Two Push-off Holes
2.2.3. Clean the holes in the diaphragm for the mounting bolts.	
2.2.4. Align the new diaphragm with the platen.	Figure 13: The platen near the diaphragm Figure 14: One rod installed

Sections	Figures, Tables, and Supplements
2.2.5. Install the gum rubber in the diaphragm.	Figure 15: Gum Rubber Installation for the Models MP1601xx, MP1602xx, MP1603xx, and MP1604xx Figure 16: Gum Rubber Installation for the Models MP1A03xx Figure 17: Gum Rubber Installation for the Models MP1550_
2.2.6. Attach the diaphragm to the platen.	
2.2.7. Tighten the diaphragm after one week (40 hours).	
2.3. Adjusting Ram Shaft Seal Tightness (and Free Fall Speed) (Document BIPPMM13)	
2.3.1. How the Ram Shaft Seals Work	Table 5: Shims Used on Shaft Seal Tension Collar Figure 18: Shaft Seals and Related Components
2.3.2. Seal Tightness Adjustment	Figure 19: Seal Tightness Adjustments
2.4. Understanding and Setting Press Water Levels (Document BIPPMM15)	
2.4.1. Required Levels	Figure 20: Correct Low and High Levels
2.4.2. How to Set the Levels Accurately and Avoid Overflow	Figure 21: Level Float Components Important in Setting Levels
2.5. Servicing a Misaligned ("Jammed") Can Assembly (Document BIPPMM09)	Figure 22: Can-To-Cylinder Rod Mounting Components
2.5.1. Inspecting the Can After a "Jam"	
2.5.2. Dismounting the Can	
2.5.3. Replacing Can Cylinder(s), If Required	
2.5.4. Remounting and Positioning the Can	
2.6. Servicing the Integral Conveyor (Document BIPPMM12)	
2.6.1. Conditions Requiring Servicing and Summary of Procedures	
2.6.1.1. Belt Too Tight Causing "Taut Belt..." Error (Tension Adjustment)	
2.6.1.2. Belt Not Centered (Tracking Adjustment)	
2.6.1.3. Foreign Material (Goods) Wrapped Around Rollers	Figure 23: Conveyor Belt and Rollers
2.6.1.4. Belt Worn or Damaged	
2.6.1.5. Hardware Deteriorated	
2.6.2. Preparing the Press for Safe Conveyor Servicing	Figure 24: Wood Planks Under Raised Can Figure 25: Securing the Door
2.6.3. Belt Removal and Installation (for access to rollers or belt replacement)	
2.6.3.1. Facilitating Tension Roller Removal On Older Presses	

Sections	Figures, Tables, and Supplements
2.6.3.1.1. Cutting a Slot for Roller Removal	Figure 26: Tank Left Side Wall With Slot Figure 27: Tank Left Side Wall—Slot Dimensions
2.6.3.1.2. Performing Additional Disassembly	
2.6.3.2. Removing/Replacing the Tension Roller (Current Design)	Figure 28: Left Side, Load End Roller Hardware (right side similar) Figure 29: Tracking Bracket and Related Components Hanging from Tracking Roller Figure 30: Pulling Belt Through Press from Unload End
2.6.3.3. Partially Removing/Replacing the Drive Roller (for belt replacement)	Figure 31: Components Used in Partially Removing Drive Roller (your press may be opposite hand)
2.6.4. Restoring Proper Belt Tension	Figure 32: Belt Tension Required Settings
2.6.5. Adjusting Belt Tracking On the Load End	Supplement 1: Understanding Left/Right Terminology Figure 33: How to Angle the Tracking Roller to Correct Belt Creeping Figure 34: Load End Belt Tracking Adjustments
2.6.6. Adjusting Belt Tracking On the Unload End	
Chapter 3. Hydraulic System Troubleshooting	
3.1. How the Single Stage Press Hydraulic System Works (Document BIPPMF01)	Figure 35: Major Press Components
3.1.1. The Pumps and Related Components	Figure 36: Pressure Pump and Related Control Components
3.1.2. The Hydraulic System and How It Functions During Operation	Figure 37: Single Stage Press Hydraulic Schematic
3.1.2.1. Idling (waiting to load)	Figure 38: Ram and Can Proximity Switches
3.1.2.2. Loading	
3.1.2.3. Ram “Free-fall”	Figure 39: Pre-fill Pilot Valve and Pre-fill Valve
3.1.2.4. Preparing to press (pre-fill valve closed, bypass valve permitted to close)	
3.1.2.5. Processing (extracting)	
3.1.2.6. Discharging	Supplement 2: How the Can Assembly is Susceptible to Damage
3.2. Onboard Troubleshooting Aids for Digital Outputs and Inputs (Document BIUUUT04)	Figure 40: Troubleshooting Aids
3.2.1. How To Use the Troubleshooting Aids	
3.2.1.1. Microprocessor Display	

Sections	Figures, Tables, and Supplements
3.2.1.2. IO Boards	Supplement 3: About the Yellow Light and Serial Communication
3.2.1.3. Electrical Components	
3.2.2. Caveats	
3.3. About the Ram Proximity Switches, the Switch Post, and the Switch Operation Rod (Document BIPPMM21)	Figure 41: Ram Proximity Switches, Related Components, and Switch Functions
3.3.1. Install the switch operation rod and the switch post, if necessary	Figure 42: Installation of the Switch Operation Rod and Switch Mounting Post
3.3.2. Examine the clearance between each switch and its target	
3.3.3. Examine each switch vertical position	
3.3.3.1. PXST “The ram is up fully”	
3.3.3.2. PXSM “The ram is in the container” and PXSU “The ram is at the discharge position”	Figure 43: Diaphragm is Safely in Container (PXSM)
	Figure 44: Where to Park the Ram (PXSU)
3.3.3.3. PXSL “The ram is low” and PXSB “The ram is down fully”	Figure 45: PXSL and PXSB With Brackets Together
	Figure 46: Correct Clearance—PXSB Adjustment
3.4. Troubleshooting Ram Malfunctions (Document BIPPMT01)	
3.4.1. What You Should Know Before Troubleshooting	
3.4.2. Troubleshooting Procedures	Table 6: Ram Symptoms and Causes Cross-reference
3.4.2.1. Ram Will Not Go Down or Goes Down Slowly	Table 7: Valve Actuation Sequence for Ram DOWN (observe LED's on actuators)
	Chart 1: Ram Will Not Go Down (two technicians required)
	Chart 2: Ram Goes Down Slowly (two technicians required)
3.4.2.2. Ram Will Not Go Up or Goes Up Slowly	Table 8: Valve Actuation Sequence for Ram UP (observe LED's on valve actuators)
	Chart 3: Ram Will Not Go Up (two technicians required)
	Chart 4: Ram Goes Up Slowly (two technicians required)
3.4.2.3. Ram Drifts Down at Idle	Table 9: Valve State During Idle
	Chart 5: Ram Drifts Down at Idle
3.4.2.4. Neither the Ram Nor Can Will Move	Chart 6: Neither the Ram Nor Can Will Move

Sections	Figures, Tables, and Supplements
3.4.2.5. Little or No Extraction	Table 10: Valve States During Pressing (observe LED's on valve actuators)
	Chart 7: Little or No Extraction (two technicians required)
3.4.2.6. Commanded Pressure Not Achieved or Achieved Slowly	Table 11: Applicable Milnor® Single Stage Press Models and Pressure Ratings
	Supplement 4: About Impaired Pressing
	Chart 8: Commanded Pressure Not Achieved or Achieved Slowly
3.4.3. Functional Tests	
3.4.3.1. How to Check Electric Valve Actuator Circuits and Test the Solenoids	Figure 47: Ram Electrically Operated Hydraulic Valves
	Table 12: Digital Outputs for Ram Functions (electric valves)
3.4.3.2. How to Inspect and Service Hydraulic Valve Cartridges	Figure 48: Pressure Relief Valves and Regulators
	Figure 49: Operating Valve Cartridge
	Figure 50: Bench-testing a Directional Valve
3.4.3.3. How to Bench Test Directional Valves	
3.4.3.4. How to Test the D/A Board and Proportional (DBET) Card Analog Output	Table 13: Relationships Among Pump Control Components at Each End of Range
	Chart 9: How to Test the D to A Board and Proportional (DBET) Card Analog Output
3.4.3.5. How to Test Pressure Transducer and A/D Board Analog Input	Table 14: Relationships Among Pressure Sensing Components at Each End of Range
	Chart 10: How to Test Pressure Transducer and A/D board Analog Input
3.4.3.6. How to Test the Pressure Pump	Chart 11: Pressure Pump Test
3.4.3.7. How to Test the Ram Piston Seals	Figure 51: Where to Disconnect Tubing to Test Ram Piston Seals
	Supplement 5: About Ram Piston Seal Replacement
3.4.3.8. How to Test the Pre-fill Valve	
3.4.3.9. How to Test the Bypass Valve	Figure 52: Bypass Valve: Where to Disconnect Hose
3.4.3.10. How to Test for Mid-range Pressure	
3.5. Setting Single Stage Press Pressures (Document BIPPMT02)	Table 15: List of Adjustments
	Table 16: Adjustment Specifications
3.5.1. Preparations, Precautions and Tips	
3.5.1.1. Two technicians are needed.	
3.5.1.2. Be prepared to load goods.	

Sections	Figures, Tables, and Supplements
3.5.1.3. Have needed materials on hand.	
3.5.1.4. Get the gist of the procedure.	Figure 53: How Pressure Adjustments Are Made
	Figure 54: Where Most Pressures are Read
3.5.1.5. Adhere to the adjustment order.	
3.5.1.6. Ensure minimum ramp rates	Chart 12: Ensure Minimum Ramp Rates
3.5.2. Summary of Adjustments	Chart 13: Summary of Adjustments
3.5.3. Set Idle Pressure	Chart 14: Set Idle Pressure
3.5.4. Set Pump Compensation (Full System) Pressure	Chart 15: Set Pump Compensation (Full System) Pressure
3.5.5. Set 1st Stage Horsepower (amperage draw)	Chart 16: Set 1st Stage Horsepower (amperage draw)
3.5.6. Set 2nd Stage Horsepower (amperage draw), System Relief Pressure and Pre-fill Pilot Pressure	Chart 17: Set 2nd Stage Horsepower (amperage draw), System Relief Pressure and Pre-fill Pilot Relief Pressure
3.5.7. Set Proportional Valve Maximum Pressure	Chart 18: Set Proportional Valve Maximum Pressure
3.5.8. Set Ram Relief Pressure	Chart 19: Set Ram Relief Pressure
3.5.9. Set Can Pressure	Chart 20: Set Can Pressure

Chapter 1
Safety for Service Personnel

BIUUUS27 (Published) Book specs- Dates: 20101202 / 20101202 / 20101202 Lang: ENG01 Applic: PPM

1.1. Safety—Single Stage Membrane Press

1.1.1. General Safety Requirements—Vital Information for Management Personnel [Document BIUUUS04]

Incorrect installation, neglected preventive maintenance, abuse, and/or improper repairs, or changes to the machine can cause unsafe operation and personal injuries, such as multiple fractures, amputations, or death. The owner or his selected representative (owner/user) is responsible for understanding and ensuring the proper operation and maintenance of the machine. The owner/user must familiarize himself with the contents of all machine instruction manuals. The owner/user should direct any questions about these instructions to a Milnor® dealer or the Milnor® Service department.

Most regulatory authorities (including OSHA in the USA and CE in Europe) hold the owner/user ultimately responsible for maintaining a safe working environment. Therefore, the owner/user must do or ensure the following:

- recognize all foreseeable safety hazards within his facility and take actions to protect his personnel, equipment, and facility;
- work equipment is suitable, properly adapted, can be used without risks to health or safety, and is adequately maintained;
- where specific hazards are likely to be involved, access to the equipment is restricted to those employees given the task of using it;
- only specifically designated workers carry out repairs, modifications, maintenance, or servicing;
- information, instruction, and training is provided;
- workers and/or their representatives are consulted.

Work equipment must comply with the requirements listed below. The owner/user must verify that installation and maintenance of equipment is performed in such a way as to support these requirements:

- control devices must be visible, identifiable, and marked; be located outside dangerous zones; and not give rise to a hazard due to unintentional operation;
- control systems must be safe and breakdown/damage must not result in danger;
- work equipment is to be stabilized;
- protection against rupture or disintegration of work equipment;

- guarding, to prevent access to danger zones or to stop movements of dangerous parts before the danger zones are reached. Guards to be robust; not give rise to any additional hazards; not be easily removed or rendered inoperative; situated at a sufficient distance from the danger zone; not restrict view of operating cycle; allow fitting, replacing, or maintenance by restricting access to relevant area and without removal of guard/protection device;
- suitable lighting for working and maintenance areas;
- maintenance to be possible when work equipment is shut down. If not possible, then protection measures to be carried out outside danger zones;
- work equipment must be appropriate for preventing the risk of fire or overheating; discharges of gas, dust, liquid, vapor, other substances; explosion of the equipment or substances in it.

1.1.1.1. **Laundry Facility**—Provide a supporting floor that is strong and rigid enough to support–with a reasonable safety factor and without undue or objectionable deflection–the weight of the fully loaded machine and the forces transmitted by it during operation. Provide sufficient clearance for machine movement. Provide any safety guards, fences, restraints, devices, and verbal and/or posted restrictions necessary to prevent personnel, machines, or other moving machinery from accessing the machine or its path. Provide adequate ventilation to carry away heat and vapors. Ensure service connections to installed machines meet local and national safety standards, especially regarding the electrical disconnect (see the National Electric Code). Prominently post safety information, including signs showing the source of electrical disconnect.

1.1.1.2. **Personnel**—Inform personnel about hazard avoidance and the importance of care and common sense. Provide personnel with the safety and operating instructions that apply to them. Verify that personnel use proper safety and operating procedures. Verify that personnel understand and abide by the warnings on the machine and precautions in the instruction manuals.

1.1.1.3. **Safety Devices**—Ensure that no one eliminates or disables any safety device on the machine or in the facility. Do not allow machine to be used with any missing guard, cover, panel or door. Service any failing or malfunctioning device before operating the machine.

1.1.1.4. **Hazard Information**—Important information on hazards is provided on the machine safety placards, in the Safety Guide, and throughout the other machine manuals. **Placards must be kept clean so that the information is not obscured. They must be replaced immediately if lost or damaged. The Safety Guide and other machine manuals must be available at all times to the appropriate personnel.** See the machine service manual for safety placard part numbers. Contact the Milnor Parts department for replacement placards or manuals.

1.1.1.5. **Maintenance**—Ensure the machine is inspected and serviced in accordance with the norms of good practice and with the preventive maintenance schedule. Replace belts, pulleys, brake shoes/disks, clutch plates/tires, rollers, seals, alignment guides, etc. before they are severely worn. Immediately investigate any evidence of impending failure and make needed repairs (e.g., cylinder, shell, or frame cracks; drive components such as motors, gear boxes, bearings, etc., whining, grinding, smoking, or becoming abnormally hot; bending or cracking of cylinder, shell, frame, etc.; leaking seals, hoses, valves, etc.) Do not permit service or maintenance by unqualified personnel.

1.1.2. Safety Alert Messages—Internal Electrical and Mechanical Hazards [Document BIUUUS11]

The following are instructions about hazards inside the machine and in electrical enclosures.

WARNING 1: Electrocution and Electrical Burn Hazards—Contact with electric power can kill or seriously injure you. Electric power is present inside the cabinetry unless the main machine power disconnect is off.

- Do not unlock or open electric box doors.
- Do not remove guards, covers, or panels.
- Do not reach into the machine housing or frame.
- Keep yourself and others off of machine.
- Know the location of the main machine disconnect and use it in an emergency to remove all electric power from the machine.

WARNING 2: Entangle and Crush Hazards—Contact with moving components normally isolated by guards, covers, and panels, can entangle and crush your limbs. These components move automatically.

- Do not remove guards, covers, or panels.
- Do not reach into the machine housing or frame.
- Keep yourself and others off of machine.
- Know the location of all emergency stop switches, pull cords, and/or kick plates and use them in an emergency to stop machine motion.

CAUTION 3: Crush and Entrap Hazards—The bell will crush your body or limbs if it descends while you are under it. Bell can descend with power off or on.

- Do not reach into the machine housing or frame.
- Use the factory supplied gaff-hook to move objects inside the housing.

1.1.3. Safety Alert Messages—External Mechanical Hazards [Document BIUUUS12]

The following are instructions about hazards around the front, sides, rear or top of the machine.

CAUTION 4: Fall, Entangle, and Strike Hazards—Machine motion can cause you to fall or become entangled in or struck by nearby objects if you stand, walk, or ride on the machine. Shuttles and conveyor belts move automatically.

- Keep yourself and others off of machine.

1.1.4. Safety Alert Messages—Unsafe Conditions [Document BIUUUS14]

1.1.4.1. Damage and Malfunction Hazards

1.1.4.1.1. Hazards Resulting from Inoperative Safety Devices

WARNING 5: Multiple Hazards—Operating the machine with an inoperative safety device can kill or injure personnel, damage or destroy the machine, damage property, and/or void the warranty.

- Do not tamper with or disable any safety device or operate the machine with a

malfunctioning safety device. Request authorized service.

WARNING 6: Electrocution and Electrical Burn Hazards—Electric box doors—Operating the machine with any electric box door unlocked can expose high voltage conductors inside the box.

- Do not unlock or open electric box doors.

WARNING 7: Entangle and Crush Hazards—Guards, covers, and panels—Operating the machine with any guard, cover, or panel removed exposes moving components.

- Do not remove guards, covers, or panels.

1.1.4.1.2. Hazards Resulting from Damaged Mechanical Devices

WARNING 8: Multiple Hazards—Operating a damaged machine can kill or injure personnel, further damage or destroy the machine, damage property, and/or void the warranty.

- Do not operate a damaged or malfunctioning machine. Request authorized service.

1.1.4.2. Careless Use Hazards

1.1.4.2.1. Careless Operation Hazards—Vital Information for Operator Personnel (see also operator hazards throughout manual)

WARNING 9: Multiple Hazards—Careless operator actions can kill or injure personnel, damage or destroy the machine, damage property, and/or void the warranty.

- Do not tamper with or disable any safety device or operate the machine with a malfunctioning safety device. Request authorized service.
- Do not operate a damaged or malfunctioning machine. Request authorized service.
- Do not attempt unauthorized servicing, repairs, or modification.
- Do not use the machine in any manner contrary to the factory instructions.
- Use the machine only for its customary and intended purpose.
- Understand the consequences of operating manually.

CAUTION 10: Goods Damage and Wasted Resources—Entering incorrect cake data causes improper processing, routing, and accounting of batches.

- Understand the consequences of entering cake data.

1.1.4.2.2. Careless Servicing Hazards—Vital Information for Service Personnel (see also service hazards throughout manuals)

WARNING 11: Electrocution and Electrical Burn Hazards—Contact with electric power can kill or seriously injure you. Electric power is present inside the cabinetry unless the main machine power disconnect is off.

- Do not service the machine unless qualified and authorized. You must clearly understand the hazards and how to avoid them.
- Abide by the current OSHA lockout/tagout standard when lockout/tagout is called for in the service instructions. Outside the USA, abide by the OSHA standard in the absence of any other overriding standard.

WARNING 12: Entangle and Crush Hazards—Contact with moving components normally isolated by guards, covers, and panels, can entangle and crush your limbs. These components move automatically.

- Do not service the machine unless qualified and authorized. You must clearly understand the hazards and how to avoid them.
- Abide by the current OSHA lockout/tagout standard when lockout/tagout is called for in the service instructions. Outside the USA, abide by the OSHA standard in the absence of any other overriding standard.

CAUTION 13: Crush Hazards—The bell will crush your body or limbs if it descends while you are under it. Bell can descend with power off or on.

- Secure both red safety stands in accordance with the instructions furnished, then lock out and tag out power at the main machine disconnect before working under the bell.

— End of BIUUUS27 —

BIPPMS01 (Published) Book specs- Dates: 20101202 / 20101202 / 20101202 Lang: ENG01 Applic: PPM

1.2. Safe Servicing—Vital Information for Personnel Who Maintain and Service the Single Stage Press

This document supplements document BIUUUS27 “Safety—Single Stage Membrane Press” and the safety manual for service personnel. It provides important information regarding:

1. the normally guarded hazards that service personnel must protect themselves and others from in the course of their work and,
2. maintenance issues that can cause costly machine damage and down time.

Do not service the machine until you have read and understand this, and all referenced safety information.

1.2.1. Automated Laundering System Hazards

The press, which is part of an automated laundering system, is located within a protected (usually fenced) area (see safety manual and document BISUUI01 “Proximity Safeguarding for Automatic Shuttle Conveyers” in the installation manual). This enclosure protects personnel from the shuttle conveyor strike and crush hazards described in the safety manual. When you enter this area to perform maintenance, you are responsible to ensure that your work does not compromise the protections provided by the safety fencing.

1.2.2. Door Interlock Bypass Hazards

The press is equipped with a guarded key switch that permits you to operate the press with the normally interlocked access doors open. The bypass procedure, which exposes the normally guarded ram, can, and internal conveyor, is only for maintenance and must never be used during operation. Nor must operators be given access to the key. Use this procedure in strict compliance with document BICP1S01 “SAFETY ALERT for Owner/Managers and Maintenance Personnel: Using the Door Interlock Bypass Key Switch”, in the reference manual and ensure that all personnel understand the hazards associated with these powerful, moving components.

Safety supports are provided for working on the can and ram. Use these safety tools in accordance with document BIUUUS06 “How to Use the Safety Stands...”

WARNING 14: Crush and Sever Hazards—The can and ram move independently. During operation, these components move without warning. These components can also drift down with power off. Any of several closing gaps will crush or sever body parts.

- Proceed only if a qualified service technician, knowledgeable in press manual operation.
- Use the door interlock bypass key switch in strict compliance with the instructions.
- Install the safety supports and lockout/tagout power before reaching into, or working under the can or ram.
- Ensure that personnel and equipment are clear of the press before operating the machine.
- Be prepared to use emergency stop switches.

1.2.3. Top-of-press Hazards

Keep yourself and others off of the press top plate except as stated in the following safety alert message.

CAUTION 15: Multiple hazards—Various components above the press top plate move or become hot or energized. Hydraulic piping may leak. Working area is tight and may be slippery. When maintenance work necessitates getting on top of the press:

- Ensure only qualified service personnel perform top-of-press work.
- Identify and stand clear of components that move (such as the diaphragm rod) or become hot (such as the pump and motor).
- Use safe, appropriate equipment for getting on and off of the machine.
- Ensure solid footing and guard against slippery surfaces. Wash surfaces with detergent.

1.2.4. Hydraulic System Hazards

Milnor single stage presses employ a powerful, high pressure hydraulic system. Because such systems pose special hazards, only service technicians with an in-depth knowledge of hydraulics should service this system. Service technicians must be able to read and understand the hydraulic system explanation and schematic provided in document BIPPMF01 “How the single Stage Press Hydraulic System Works.”

WARNING 16: Crush and Machine Damage Hazards—Removing a drain plug or disconnecting certain piping will release oil and cause an unrestrained ram or can to fall.

- If you do not fully understand the consequences, do not tamper with hydraulic parts.
- Use safety supports.

WARNING 17: Puncture Wound and Poison Hazards—Oil leaking out under high pressure can puncture skin causing serious injury, gangrene or death.

- Do not touch hoses, pipes, or fittings, except in accordance with the service procedures.
- If injured, seek emergency medical help. Immediate surgery is required to remove oil.

CAUTION 18: Risk of costly damage—Hydraulic system servicing requires specialized knowledge and skills. Inexperienced handling of unanticipated problems can destroy the pressure pump or other components. Pressure pump must be primed before commissioning and following certain service work; otherwise, it will quickly burn out.

- Do not service or adjust hydraulic components without appropriate expertise.

1.2.5. Risks When Using *Manual* Mode

Virtually all service procedures require service personnel to operate the press manually. Do not try to learn manual operation as you go. Thoroughly familiarize yourself with these procedures, which are explained in the reference manual, so that you will be comfortable with them when performing press maintenance.

Many procedures require two technicians: one technician operates the controls while the other performs the servicing. These personnel must be able to clearly communicate and be aware of each other's activities at all times, to ensure safe working conditions. Manual operation bypasses certain safeguards.

Notice 19: For safety and convenience—Avoid manually loading goods.

- If the service procedure must be performed with goods in the machine, permit the press to accept a load of goods automatically, then take the machine off-line.
- If it becomes necessary to manually load or adjust goods, use extreme caution. Always follow the published safety precautions (see safety manual).

Notice 20: Risk of damage and misalignment—Moving the ram through the bottom of the can will cause the diaphragm to forcefully rub against the can, possibly causing damage. This does not occur in automatic operation.

- If the maintenance necessitates placing the can up and the ram down: 1) lower the can onto the press bed, 2) lower the diaphragm onto the press bed, 3) raise the can.
- If goods become jammed between the ram and can, withdraw the ram through the **top** of the can. Attempting to push the ram through the bottom will only jam the goods tighter.

1.2.6. Risks from Inattention to Maintenance or Alarms

The best way to avoid costly machine damage and downtime is to abide by the preventive maintenance schedule. The next best measure is to address the warning sign of an impending problem immediately. Educate operator and maintenance personnel to the warning signs addressed by the following:

CAUTION 21: Risk of Early Diaphragm Failure—The diaphragm will stretch too much or tear, reducing service life if it cannot properly conform to the goods. This occurs when it is contains the wrong amount of water. The diaphragm must be filled at minimum, every 40 hours of operation, but **more often if it shows signs of leaking.** See document BIPPMM10 “How to Fill and Maintain the Diaphragm” and reference card B2T2006011.

Notice 22: Attend to alarms—The hydraulic system is equipped with temperature, oil level, and filter pressure alarms

- To avoid damage and preserve the warranty, service machine as soon as an alarm occurs.

Notice 23: If the receiving chute and can assembly becomes “jammed,” STOP!—Before returning to normal operation, inspect for, and correct damage and/or misalignment. See document BIPPMM09 “Servicing a Misaligned ("Jammed") Can Assembly.”

— End of BIPPMS01 —

BICP1S01 (Published) Book specs- Dates: 20101202 / 20101202 / 20101202 Lang: ENG01 Applic: PPM

1.3. SAFETY ALERT for Owner/Managers and Maintenance Personnel: Using the Door Interlock Bypass Key Switch

The hand-operated access doors on this machine are equipped with safety lockout switches that disable the machine if a door is opened. The Door Interlock Bypass key switch permits bypassing this safety feature to allow access to certain moving parts during required maintenance procedures. This key switch, located inside the low voltage control box, is shown in Figure 1.

DANGER 24: Crush Hazard—The "Maintenance Only" position bypasses door interlocks and permits access to moving parts during both manual and automatic operation. **To prevent serious injury or death**, comply with, or ensure compliance with the following:

- **Never use the machine for normal operation with this switch in the "Maintenance Only" position.**
- **Never use this switch to clear faults or for any operational function.**
- **Use this switch *only* if you are a trained, authorized service technician**, and only when performing maintenance that requires immediate access to moving parts normally shielded by the doors.
- Always turn the switch to the "Safe Operation" position **and remove the key** before resuming normal operation or stepping away from the machine.
- Keep the Door Interlock Bypass key secured away from machine operators and all other personnel who do not fully understand the results of using it.
- Keep all electrical and control cabinets closed and securely latched. Keep control cabinet keys away from untrained employees.

Figure 1: Door Interlock Bypass Key Switch and Safety Placard

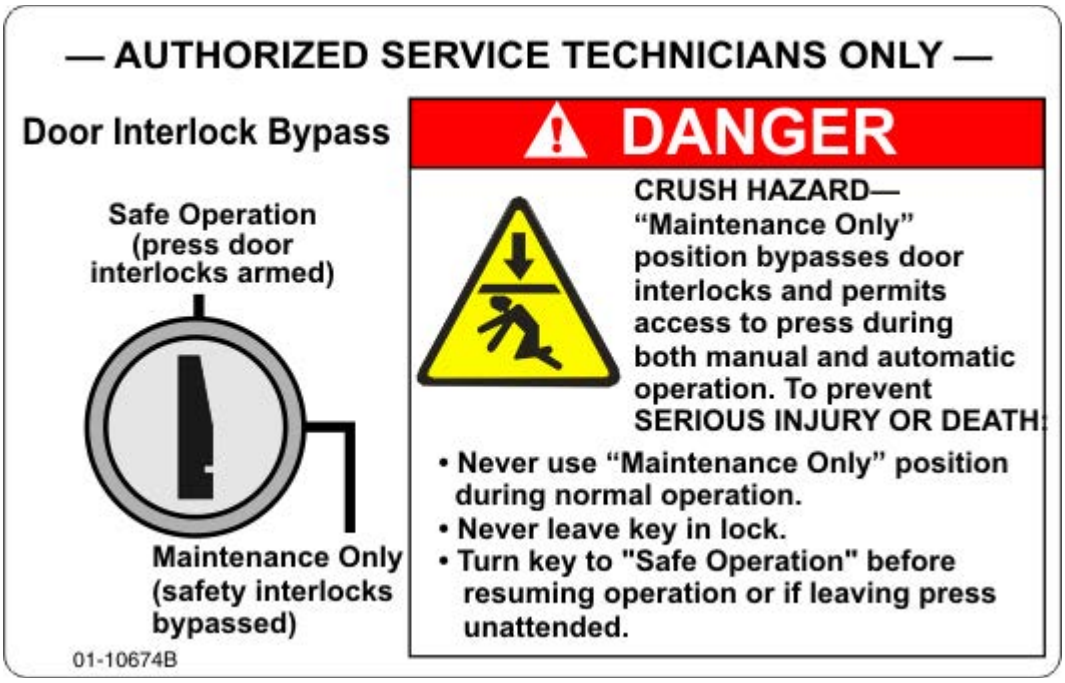

— End of BICP1S01 —

BIUUUS06 (Published) Book specs- Dates: 20101202 / 20101202 / 20101202 Lang: ENG01 Applic: PPM

1.4. How To Use the Safety Stands and Safety Bars on Single-stage Press

These machines are provided with two safety stands and two safety hangar bars (painted red) for maintenance. After the ram is raised, the hangar bars are connected between the platen and the press top plate. After the can is raised, the stands are placed under the can (but not under the ram). Use the safety stands and safety bars to perform maintenance on the machine while the can and ram are raised. A location is provided on the machine for stowing the safety stands when not in use.

WARNING 25: Crush Hazard—The safety stands and bars provide protection against the un-powered drifting down of the can or ram during maintenance in the event of a leak in the hydraulic system. **They are not intended to restrain the can or ram from coming down under power.**

- Never work **under** the raised can and ram unless the safety bars and both safety stands are installed and power is locked out/tagged out. Do not work **near** the raised can and ram with power on unless the safety bars and both safety stands are installed, except where called for in the maintenance instructions.
- Do not attempt to rest the can on the safety stands by lowering it under power. Use care not to manually command the can or ram down with the stands or bars in place.
- When working near the installed safety stands use care not to knock the stands out of position.
- Install these safety components using the procedure prescribed in this document.
- Maintain these safety components in good condition.
- When not in use, stow the safety stands in the location provided on the machine and designate a convenient, secure location to stow the safety bars (see Note 1).

Note 1: You will probably want to designate a single storage area for all loose items supplied with the press, including the safety bars, the disk used when filling the diaphragm, the fill hoses, and the gaff hook.

Figure 2: Safety Stands for Single-stage Press Models

If the ram is to be secured in the full up position for the maintenance to be performed, do this first, as follows:

1. At the controls, use the *Manual* mode to lower the can, if it is up.
2. At the controls, use the *Manual* mode to raise the ram.
3. The safety bars attach between two eye bolts—one on the platten and one on the press top plate. Attach the safety bars as shown in Figure 3. Refer to the safety stands parts drawings for a more detailed depiction of the installed safety bars.
4. Depending on the type of maintenance, it may be necessary to move the can before locking out power to the press. However, **lock out/tag out power before working under the can and ram.**

Figure 3: Safety Bars for Single-Stage Press Models

Install the safety stands as follows:

1. At the controls, use the *Manual* mode to raise the can.
2. In this step, install the stands through the nearest door; do not reach across the bed. Referring to the first figure, place the safety stands on opposite sides of the can (180 degrees apart). Refer to the safety stands parts drawing for a more detailed depiction of the installed stands. Always use both stands. **Do not attempt to rest the can on the safety stands by lowering it under power** (even though it may drift down onto the stands).
3. Lock out/tag out power to the machine.

— End of BIUUUS06 —

Chapter 2
Routine Maintenance

BIPPMM05 (Published) Book specs- Dates: 20101202 / 20101202 / 20101202 Lang: ENG01 Applic: PPM

2.1. Single Stage Press Preventive Maintenance

Notice 26: Understand the press servicing hazards—Before performing press maintenance, review document BIPPMS01 “Safe Servicing...”

2.1.1. Lubricant Specifications

Lubricants used on the press must adhere to the following:

Table 1: Lubricant Specifications

Component	Lubricant	Approximate Quantity			
		MP16xxxx Models		MP1Axxxx Models	
		Tank Only	Entire System	Tank Only	Entire System
Hydraulic system	Shell Tellus 68 or equivalent	55 gallons (208 liters)	70 gallons (265 liters)	98 gallons (371 liters)	115 gallons (435 liters)
Bearings	Shell Alvania LP	--			

2.1.2. Preventive Maintenance Schedule and Maintenance Locations

Table 2 and the figures following it (referred to in the table) describe the routine maintenance needed to keep the press functioning properly and to obtain normal service life. Some common maintenance procedures called for in the schedule are provided in the remainder of this document. Others are explained throughout the service manual. Some preventive maintenance must be performed with the machine running. However, **any maintenance that reqires access to normally guarded areas must be performed in compliance with the safety support and lockout/tagout requirements stated in the safety instructions.**

CAUTION 27: Machine Damage—Failure to perform the maintenance described herein will cause parts to wear prematurely and may void the warranty on these parts.

Table 2: Preventive Maintenance Schedule

Component	Action	See	Frequency
Hydraulic system	Check gauges on gauge cluster. See BIPPMT02 "Setting Single Stage Press Pressures" for proper values (see Note 2 and Note 5).	Figure 4 (items 1, 2, 3)	Daily
	Check oil level and oil temperature with ram up and can down: 140 F (60 C) maximum temperature.	Figure 4 (items 4, 5)	
	Check filter pressure gauge: 25 psi (1.76 Kg/cm sq.) maximum.	Figure 4 (item 7)	
	Look at oil condition (see Section 2.1.3 "About the Press Hydraulic Oil").	Figure 7	40 oper. hours
	Check hoses and connections for leaks, deterioration.		Weekly
	Change oil filter.	Figure 4 (item 6)	Every 500 operating hours
	Have oil sample tested by a reputable testing facility for: viscosity, the presence of insolubles, acid number and spectrographic wear analysis. Retain or replace oil as advised by the testing facility.		Every 2000 operating hours
	Replace system oil breather and moisture filter.	Figure 8	Annually
	Change recirculation oil filter (MP1Axxxx models only): pn#27E7112B	Figure 6	Every 500 operating hours
Screens	Inspect and clean out press screens.	Figure 10	Daily
Oil cooler air filter	Slide filter out and hose filter off. Direct the water stream opposite the air flow arrow stamped on filter.	Figure 7	Weekly (Note 4)
Goods conveyor	Hose off bed with water.	Figure 10	Daily
	Inspect belt condition, tension and tracking (see BIPPMM12 "Servicing the Integral Conveyor"). Inspect and grease bearing fittings (motor side), as necessary.	Figure 10	
Diaphragm	Refill diaphragm via the quick disconnect hoses (see document BIPPMM10 "How to Fill and Maintain the Diaphragm" and reference card B2T2006011).		Every 40 operating hours min. (see Note 3)
	Check diaphragm attachment bolts for tightness. Re-torque as necessary (see BIPPMM03 "Installing the Milnor Diaphragm...")		Weekly
	Check for rubbing against can (see next item)		
Receiving chute and can assy.	Verify that can descends flat and level on press bed. Adjust if required (see BIPPMM09 "Servicing a Misaligned (Jammed) Can Assembly").		Weekly
Discharge door	Check door pressure gauge: 22—25 Psi (1.54—1.75 Kg cm sq.)	Figure 9	Weekly
Prefill pilot	Check pressure gauge: 2000 Psi (139.9 Bar)	Figure 5	
Suppressor (optional)	Check pressure gauge: 2300 Psi (159 Bar). See Section 2.1.4 "Testing the Suppressor Pre-charge "	Figure 11	Annually
Belt brush	Hand wipe off lint and debris	Figure 10	Monthly

Note 2: System pressure is machine model and program-dependent.

Note 3: Diaphragm leaks are difficult to detect and are a leading cause of diaphragm failure. Topping off the diaphragm every 40 hours (or more frequently, if needed) can prevent premature diaphragm failure.

Note 4: Initially inspect weekly. Adjust cleaning schedule according to laundry lint load.

Note 5: Consult factory before ordering a replacement hydraulic pump from others. Pumps are modified at the factory for use in single stage presses. These modifications are not recorded on the pump data plate.

Figure 4: Primary Hydraulic Gauges

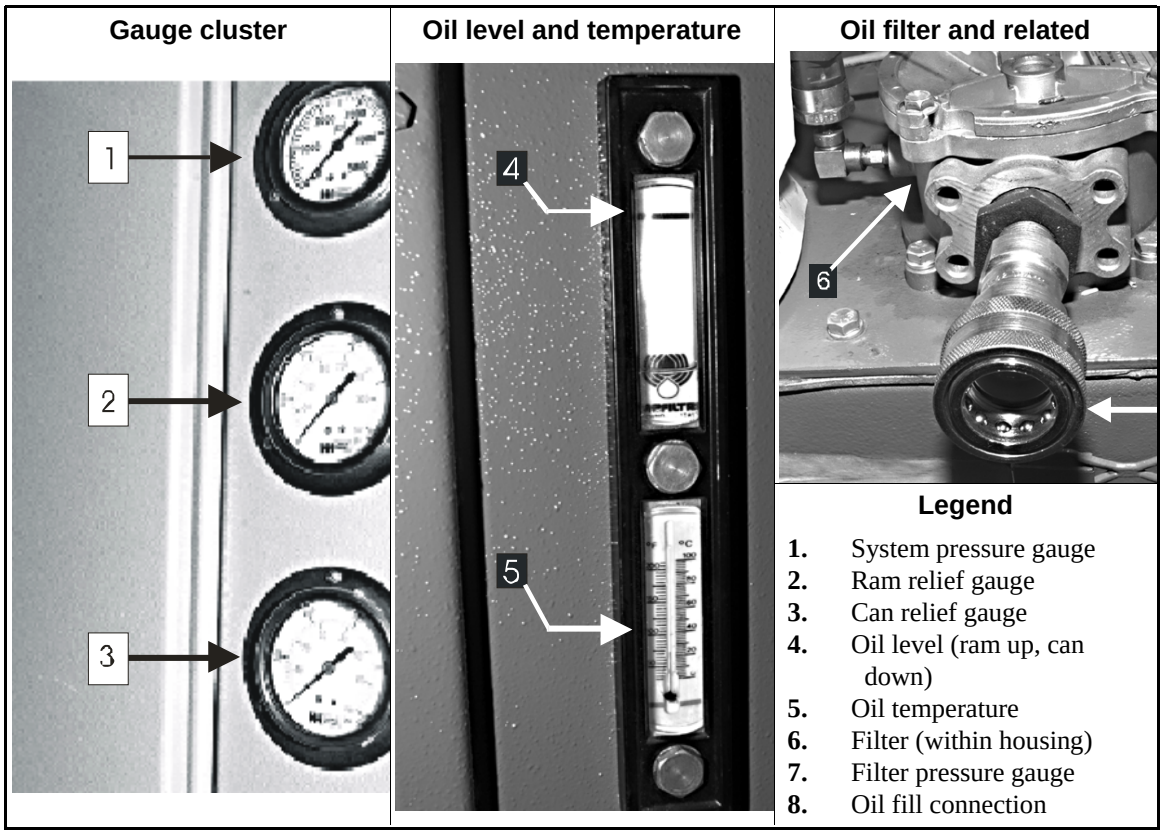

Figure 5: Prefill Pilot Pressure Gauge

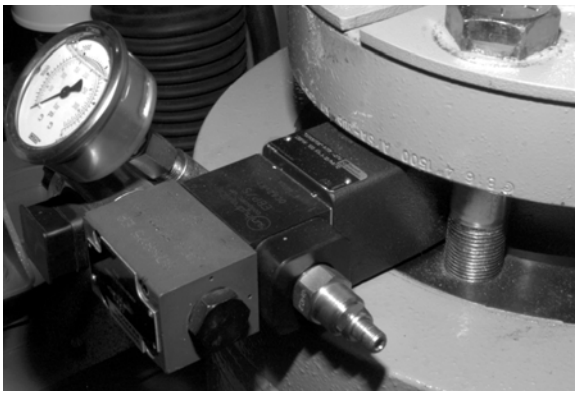

Figure 6: Recirculation filter (MP1Axxxx models)

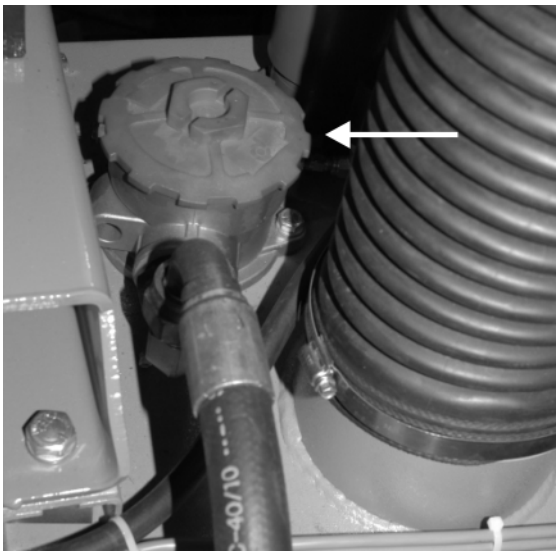

Figure 7: Miscellaneous hydraulic oil maintenance items

Oil view port	Tank drain valve
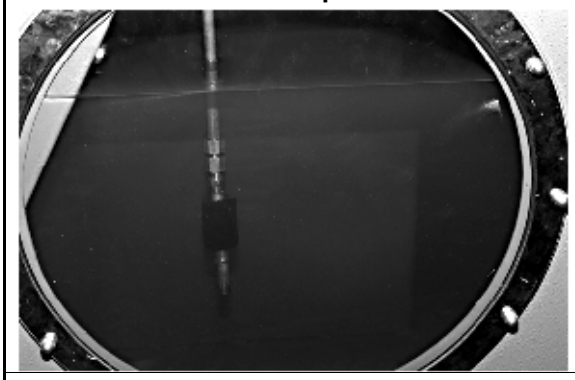	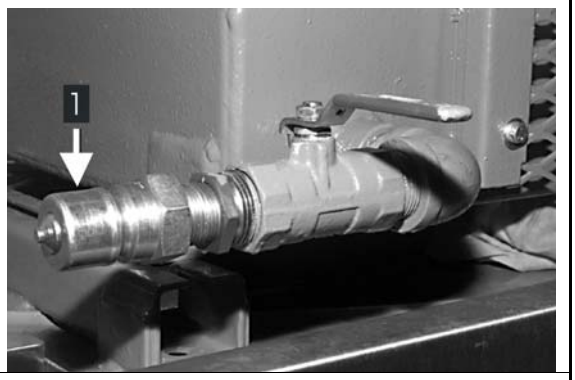
Oil cooler air filter	**Legend**
	1. Oil quick disconnect in storage position

Figure 8: Breather/Moisture Filter

Figure 9: Discharge door pressure regulator, gauge

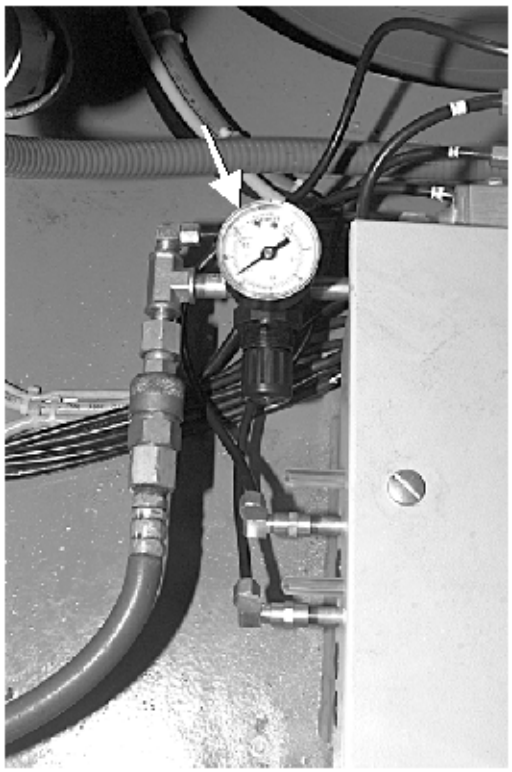

Figure 10: Conveyor maintenance items

Belt grease fitting	Belt brush
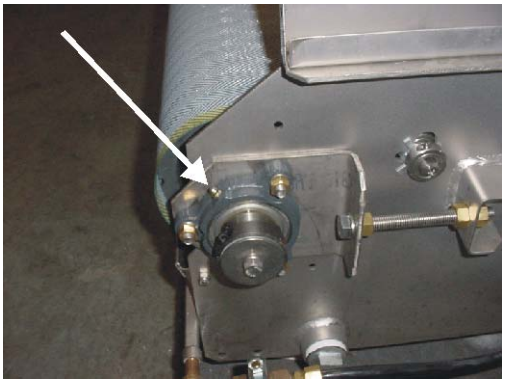	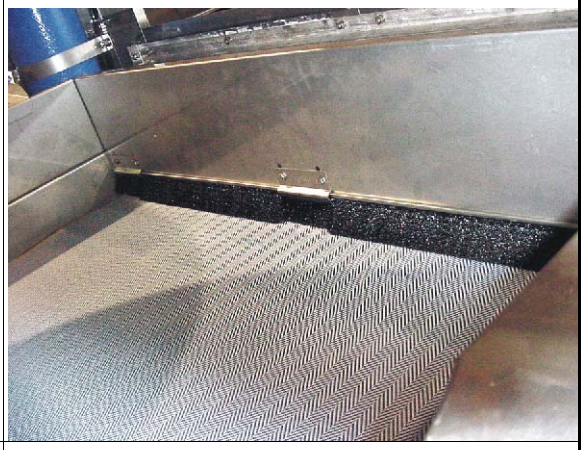
Press bed and conveyor belt	**Press screens**
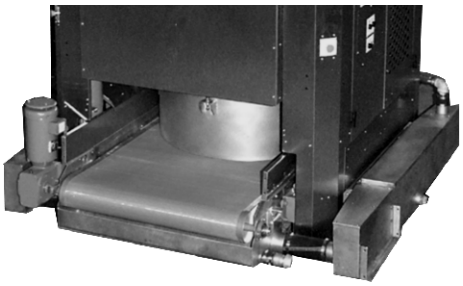	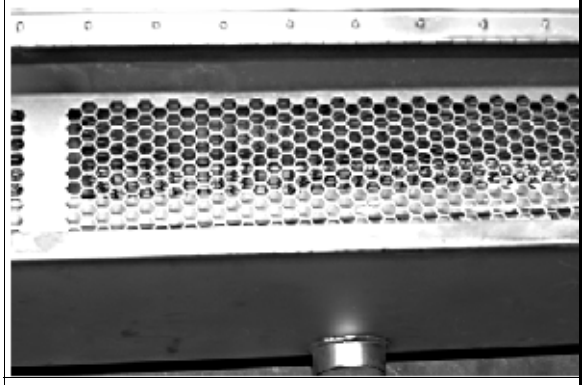
	Legend **1.** Grease fitting

2.1.3. About the Press Hydraulic Oil

Obtaining normal service life from the press hydraulic components depends on maintaining hydraulic oil quality and quantity.

CAUTION 28: Burn Hazard—Hot oil can cause serious burns.

- Allow oil to cool before changing oil.

CAUTION 29: Machine Damage— Mixing different oil types and qualities can cause bearing and seal damage.

2.1.3.1. Inspect Oil—Visually inspect oil after the first forty hours of operation. Afterwards, inspect oil every eighty hours of operation. Evaluate oil quality and take appropriate action, as explained in Table 3, which follows:

Table 3: Assessing Oil Quality

Oil Appearance	Action or Comment
• Clean and clear with few deposits	Permissible to extend time between inspections.
• Slightly dark with no sediment	Oil is normal. Oil darkens with use.
• Very dark with sediment	Filter the oil.
• Contains floating or settled impurities	Filter the oil. Clean the system. Inspect the filter(s)
• Cloudy and discolored with visible water separation	Drain off water. Inspect oil morte frequently.
• Milky with air bubbles	See Section 2.1.3.2 "Air Leaks In the Hydraulic System "
• Dark with sediment and smells sour	Change oil immediately and clean the system.

2.1.3.2. Air Leaks In the Hydraulic System

2.1.3.2.1. Symptoms—Air leaks in the hydraulic system leads to oil leakage and reduced pump life. Although milky oil is a primary symptom of air leaks, some other symptoms are:

- Loud noises as the ram lifts after the pressing cycle. These noises can be best described as "marbles rolling down a pipe" instead of the normal sound of operation.
- Connections loosening and leaking.

2.1.3.2.2. Causes——Likely causes of air in the hydraulic system are:

A loose or leaking gooseneck pipe plug. Since this plug is on top of the gooseneck, air can be sucked in during operation without appearing to leak oil. Fix this by removing the plug, coating it with Loctite 569 ™ thread sealant (or equivalent), and re-installing the plug.

A loose or incorrectly seated gooseneck pre fill flange (machines produced after 5/1/1999 use back-up plates on the flange for additional clamping force). Loosen the flange bolts, step on the flange and use your body weight to center the flange, then tighten the bolts to the correct torque.

2.1.3.2.3. How to Test for Air Leaks—With no air leak, oil will remain in the gooseneck. After a several hour shutdown, remove the gooseneck pipe plug. If you do not detect a strong suction for several seconds as the oil drains to the tank, an air leak exists and must be repaired.

2.1.3.3. Oil Add and Change Procedure

CAUTION 30: Risk of oil spillage—If oil is "topped off" in the tank with the ram down, far too much oil will be added and the oil will overflow when the ram is raised.

- Change oil with ram raised and supported by diaphragm safety bars.
- If OIL LEVEL LOW appears during operation, add oil only until the message clears, then raise the ram and add oil until the tank gauge (Figure 4) indicates proper oil level.

Using the *Manual* mode, raise the ram and can fully, then install the diaphragm safety bars. After the ram and can are raised, and safety bars are in position, change the oil as follows:

1. Remove the oil quick disconnect from the oil tank (Figure 7). Use the tank drain valve to drain oil. Do not loosen hydraulic valves or hoses.
2. If the used oil contains debris, clean oil tank with lint free cloth. Do not use solvents, water, or soap to clean tank.
3. If the main oil filter is dirty, replace it. All oil added to the tank passes through the oil filter.

4. Using the provided oil quick disconnect (Figure 7), fill the tank (approximately 55 gallons, 208 liters) to within one inch (25.4 mm) of the top of the sight glass.
5. Reinstall oil quick disconnect on the tank drain. Installing the oil quick disconnect on the tank drain prevents oil spillage if the drain valve is accidentally opened.

2.1.4. Testing the Suppressor Pre-charge

The optional suppressor (Figure 11) uses a nitrogen charged screen and diaphragm to suppress noise and surges. Periodically check the pre-charge gas pressure inside the suppressor as follows:

1. Locate suppressor charging valve (Figure 11).
2. Remove the valve cover from the valve.
3. Prepare the Schrader-type charging valve block for use by removing the charging hose and installing 1/4" plug in its place. Otherwise, gas will fill the hose during the testing process, significantly reducing the charge inside of the suppressor.
4. Connect the Schrader-type block to the suppressor charging valve (Figure 11).
5. Make sure the gauge, 1/4" hole plug, bleeder valve and block connections are tight.
6. Turn the swivel hex nut counterclockwise approximately three turns. This opens the internal poppet.
7. Read the charge on the gauge. Pressure must be approximately 2300 psi (159 bar).
8. If the charge is low, see “Charging the Suppressor...BIPPMI03,” in the installation manual.
9. After reading the charge, turn the swivel hex nut clockwise approximately three turns to close the internal poppet.
10. Lock swivel hex nut (approximately 50-70 inch/pounds or 5.7-7.9 Newton/meters).
11. Remove the Schrader-type charging valve block and re-install valve cover.

Figure 11: Suppressor Charging and Pressure Testing Items

Optional pump mounted suppressor	Charging valve	Schrader-type charging block (also used to test pressure)
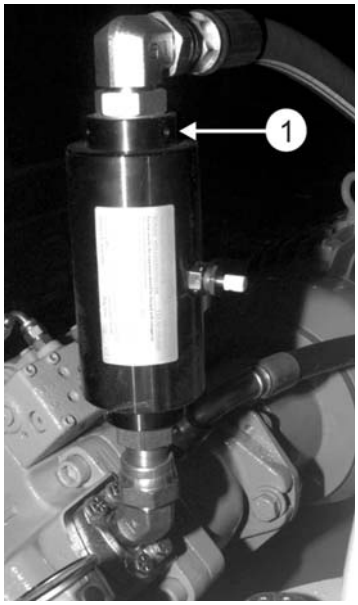	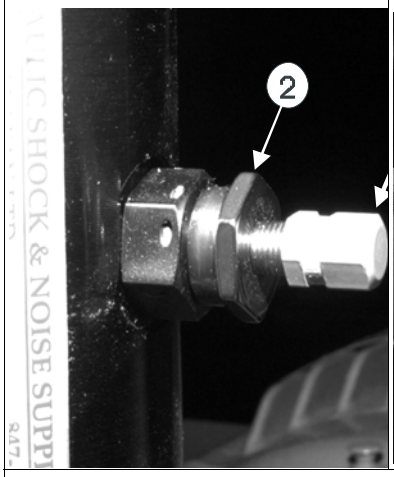	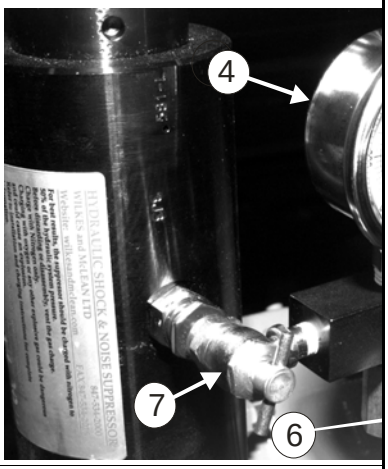

Legend

1. Suppressor
2. Swivel hex nut
3. Valve cover
4. 2300 Psi (159 bar)
5. Schrader-type valve block
6. Bleeder valve
7. T-handle (not used)

— End of BIPPMM05 —

BIPPMM17 (Published) Book specs- Dates: 20101202 / 20101202 / 20101202 Lang: ENG01 Applic: PPM

2.2. The Installation and Replacement of the Diaphragm and Gum Rubber for the 1-Station Membrane Press

This document uses Simplified Technical English.
Learn more at http://www.asd-ste100.org.

NOTICE P1: "Remove power from the machine" means use the necessary safety procedure for your location. In the USA, this is the OSHA lockout/tagout (LOTO) procedure. More local requirements can also apply.

diaphragm (membrane)—the rubber component that pushes on the goods during operation

gum rubber—sheets of soft rubber that go in the diaphragm as an alternative to water

platen—the circular steel plate that the diaphragm attaches to

container (can)—the cylinder that the goods, the diaphragm, and the platen go into during operation

bed—the platform that the goods and the container are on during operation

All models of the 1-station press made during and after November 2008 have diaphragms filled with gum rubber. If you have a 1-station press made before November 2008, you can fill the diaphragm with gum rubber as and alternative to water. This gives easier maintenance. The diaphragm does not change, only the material that fills it.

If your machine uses gum rubber, do not use the documents in the list shown below:

BIPPMM03 "Installing the Milnor Diaphragm in the Single Stage Press"
BIPPMM10 "How to Fill and Maintain the Diaphragm"
B2T2006011—the tag that shows the procedure to fill the diaphragm

2.2.1. Get the necessary personnel and materials.

- Two approved technicians. The technicians must lift the diaphragm and operate the machine manually.
- The manuals for your machine. You will use the documents BMP050065 "Hydraulic Ram and Diaphragm Assembly" and BIUUUS06 "How to Use the Safety Stands..." You may also need BIPPMM20 "The Ratchet Mechanism to Turn the Diaphragm—Components and Adjustment." These are in the maintenance manual. If you do not know how to operate the machine manually, see the reference manual.
- Two tools to clean the holes in the diaphragm for the mounting bolts. The holes are 3/8 inch diameter and 16 threads/inch. The tools include:
  - » A short tool to clean the holes before you install the diaphragm. The tool is available from Milnor (P/N 97C058T).
  - » A long tool to clean the holes through the platen. This tool is available from Milnor (P/N 97C058AT).
- A wrench and a torque wrench for the type of mounting bolts used on your machine—hex head or socket cap.
- The replacement components from Milnor. Table 4 shows the materials that you can get from Milnor. You can replace the diaphragm only, replace the gum rubber only, or replace the two. **Always replace the mounting bolts.** New bolts are supplied with the kits listed in Table 4.

Table 4: The Components for the Replacement of the Diaphragm and Gum Rubber

Range of models	Diaphragm Diameter	Kit	Diaphragm	Set of Gum Rubber Sheets
MP1601xx	39.5 inch (1003 mm)	KYSSPMRA00	ACW10001	ACW10010A
MP1602xx	39.5 inch (1003 mm)	KYSSPMRA00	ACW10001	ACW10010A
MP1603xx	39.5 inch (1003 mm)	KYSSPMRA00	ACW10001	ACW10010A
MP1604xx	39.5 inch (1003 mm)	KYSSPMRA00	ACW10001	ACW10010A
MP1A03xx	48 inch (1219 mm)	KYSSPMRA03	ACW10002	ACW10011A
MP1550xx	35.5 inch (900 mm)	KYSSPMRA04	ACW10003	ACW10012A

The kits in Table 4 have no materials to clean the surfaces between the diaphragm and the platen (these are the "no hazmat" kits). Gum rubber stops the requirement to clean and seal these surfaces.

2.2.2. Remove the used diaphragm.

WARNING 32: Risk of death or serious injury—The container and diaphragm move independently. During operation, these components move without warning. These components can also move down with power off. Spaces can close and cut off your arm.

- Keep personnel not necessary for this maintenance clear of the machine.
- Use special caution when you use the key that bypasses the door guards for maintenance.
- Two qualified technicians are necessary. Each technician must hear the other's voice clearly.

1. Let the machine empty then put it in manual operation.
2. Move the automatic doors up. Hold them up with wood blocks.
3. Bypass the safety switches with the maintenance key. Obey the safety instructions. Open the side doors.
4. Lower the container fully. Lower the diaphragm fully. Move the container up fully. If you try to move the container up when the diaphragm is up, the bottom of the container will rub hard against the diaphragm. It is a tight fit. this can cause damage.
5. **Install the container safety stands.** ***Remove power from the machine (see Notice P1).***

Tip: You will remove the 32 diaphragm bolts in the subsequent step. If your machine has a ratchet mechanism to turn the diaphragm, the diaphragm bolts also hold the four ratchet plates and related components. If these components get out of their necessary positions, you must put them in the correct locations. Do not remove the diaphragm bolts fully. Loosen each bolt until it does not hold the diaphragm, but let it stay in the platen. This will hold the ratchet plates and related components in their positions. When you are prepared to attach the diaphragm, remove one used bolt at a time and put in the new bolt. If you must put the ratchet plates and related components in the correct locations, look at document BIPPMM20.

6. While the diaphragm is on the bed, remove all 32 of the diaphragm bolts (Figure 12). Discard the used bolts.
7. Supply electrical power to the machine.
8. Move the platen up approximately three inches to disconnect the platen from the diaphragm. **Do not put your fingers below the diaphragm.** If the diaphragm does not fall off the platen, use the two push-off holes (Figure 12). You will find a bolt with a spacer and a washer in each push-off hole. Remove the bolt, spacer, and washer. Replace the bolt and tighten it against the diaphragm. After the diaphragm is free, replace the bolt, spacer and washer.

Figure 12: Diaphragm Bolts and Two Push-off Holes

The Edge of the Platen and the Diaphragm

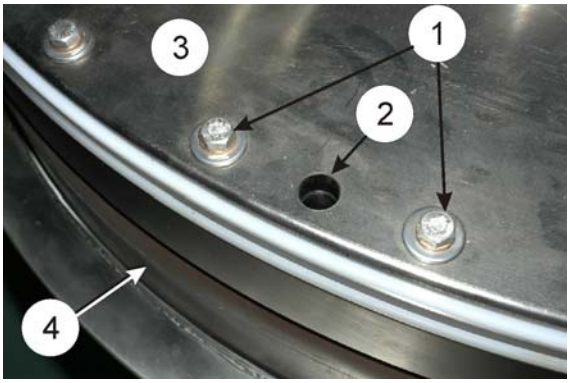

Legend

1. Diaphragm mounting bolts. Newer type platen with hex head bolts and no ratchet mechanism shown.
2. One of two push-off holes
3. Platen
4. Diaphragm

9. After the diaphragm is free of the platen, move the platen up fully.
10. **Install the platen safety bars.** ***Remove power from the machine (see Notice P1).***
11. If you will not use this diaphragm again, move it from the bed. If you will use this diaphragm again, keep it in this position, but remove the water with a siphon.

2.2.3. Clean the holes in the diaphragm for the mounting bolts.

Use the short tool to clean the mounting bolt holes in the diaphragm. This will decrease the risk that a bolt will bond or break off during installation. **Do not turn the tool more than 5/8 inch (16 mm) into the hole. If you do, this can cut into the diaphragm material.**

Tip: If the platen has a groove for an O-ring between the platen and the diaphragm, it is not necessary to install an O-ring.

If you kept the used diaphragm in its position to use it again, ignore Section 2.2.4. Go to Section 2.2.5.

2.2.4. Align the new diaphragm with the platen.

Tip: Do this procedure before you install the gum rubber. If you do not, it will be necessary to move the weight of the diaphragm and the gum rubber together.

1. Move the new diaphragm into its position. Approximately align the new diaphragm with the platen.
2. Supply power to the machine. Remove the platen safety bars.
3. Slowly lower the platen until it is approximately one inch (25 mm) from the diaphragm (Figure 13).
4. ***Remove power from the machine (see Notice P1).***

Figure 13: The platen near the diaphragm

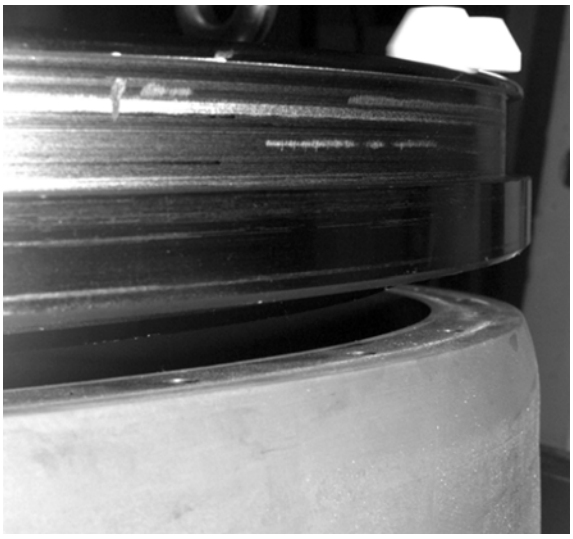

Figure 14: One rod installed

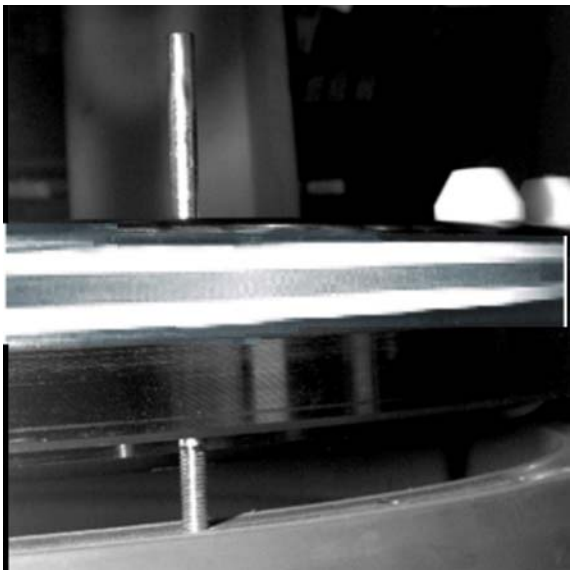

5. Put a rod with threads through one of the bolt holes in the platen. Four rods are supplied with the kit. Move the diaphragm until the rod aligns with a bolt hole in the diaphragm. Turn the rod into the bolt hole (Figure 14). Do this again with the three remaining rods at quarter points around the platen.
6. Supply electrical power to the machine.
7. Carefully lower the platen until it touches the diaphragm.
8. Fully install four mounting bolts at quarter points around the platen. Do not torque the bolts. Move the diaphragm if necessary.

9. Remove the bolts and rods.
10. Move the platen up fully.
11. **Install the platen safety bars.** ***Remove power from the machine (see Notice P1).***

2.2.5. Install the gum rubber in the diaphragm.

The gum rubber is a set of sheets of specified dimensions. The figures that follow show the gum rubber for each 1-station press model. Refer to the figure that agrees with the diaphragm you have. Put the sheets in the diaphragm in the sequence shown in the figure. When you do:

- The sheets will be tight in the diaphragm.
- The sheets will agree with the inner shape of the diaphragm.
- No more adjustment will be necessary.

Do not use adhesive. When you put each sheet in, be careful not to move the diaphragm. If the edge of the sheet catches on the wall of the diaphragm, push down on that edge. Holes in the middle of the sheets release air caught between the sheets. Each sheet will fall flat against the sheet below it. **The top of the top sheet must be between 1/4 inch (25 mm) and 1/2 inch (51 mm) below the top edge of the diaphragm.**

Figure 15: Gum Rubber Installation for the Models MP1601xx, MP1602xx, MP1603xx, and MP1604xx

Cross section: the diaphragm and the gum rubber sheets

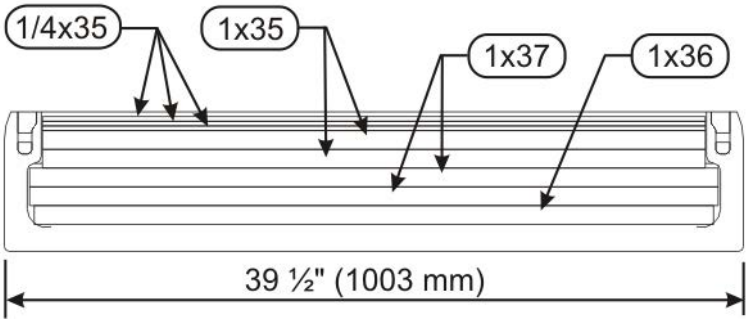

Legend

1/4x35. Three sheets at 1/4" (6 mm) thick x 35-3/8" (899 mm) diameter each.
1x35. Two sheets at 1" (25 mm) x 35-3/8" (899 mm) each
1x37. Two sheets at 1" (25 mm) x 36-3/4" (933 mm) each
1x36. One sheet at 1" (25 mm) x 36-1/4 (921 mm)

Figure 16: Gum Rubber Installation for the Models MP1A03xx

Cross section: the diaphragm and the gum rubber sheets

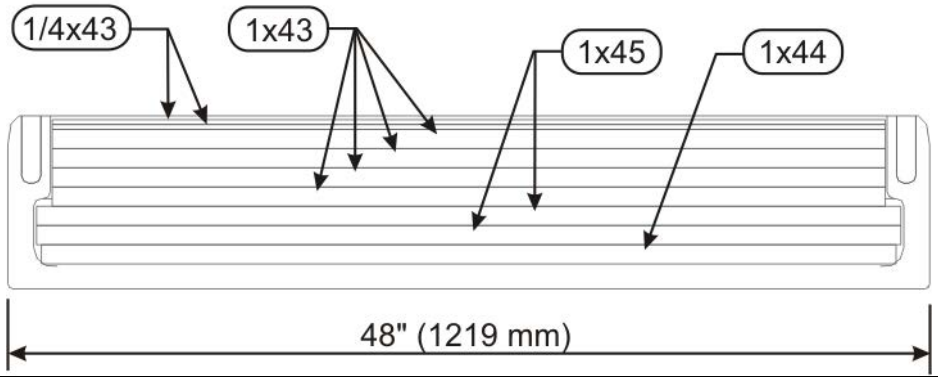

Legend

1/4x43. Two sheets at 1/4" (6 mm) thick x 43-3/8" (1102 mm) diameter each.
1x43. Four sheets at 1" (25 mm) x 43-3/8" (1102 mm) each
1x45. Two sheets at 1" (25 mm) x 44-3/4" (1137 mm) each
1x44. One sheet at 1" (25 mm) x 44-1/4" (1124 mm)

Figure 17: Gum Rubber Installation for the Models MP1550_

Cross section: the diaphragm and the gum rubber sheets

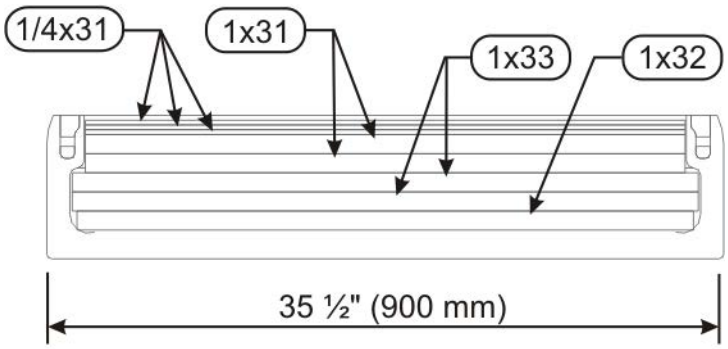

Legend

1/4x31. Three sheets at 1/4" (6 mm) thick x 31-3/8" (797 mm) diameter each.

1x31. Two sheets at 1" (25 mm) x 31-3/8" (797 mm) each

1x33. Two sheets at 1" (25 mm) x 32 3/4" (832 mm) each

1x32. One sheet at 1" (25 mm) x 32-1/4" (819 mm)

2.2.6. Attach the diaphragm to the platen.

CAUTION 33: Risk of a malfunction—The used bolts are weak from tension. They can break easily.

- Use only the new bolts supplied with the kit, not the used bolts.

1. Supply electrical power to the machine. Remove the platen safety bars.
2. Slowly move the platen down until it touches the diaphragm.
3. ***Remove power from the machine (see Notice P1).***
4. Install the diaphragm bolts. Add the bolts with equal space around the platen. Install each bolt as specified in the list that follows.
   a. Apply the thread lock compound supplied with the kit (Loctite 242 or the equivalent).
   b. Install the bolt fully with the wrench, but do not torque it.
   c. If a bolt will not go in fully, remove it. Clean the bolt hole with the long tool. Install the bolt.
   d. Clean the thread lock compound from the platen.
5. Torque the mounting bolts to the value specified in the document BMP050065 (Hydraulic Ram and Diaphragm Assembly). Use a pattern that increases tension equally around the platen. Clean the thread lock compound from the platen.
6. If the platen uses socket cap bolts that go in recesses, put the plastic buttons supplied with the kit in the bolt hole recesses. This decreases the risk of corrosion.
7. Attach the tag B2T2001042 (supplied with the kit) to the machine. This tag shows that it is necessary to tighten the bolts after one week (40 hours) of operation. Tell this to the person that operates the machine.
8. Supply electrical power to the machine. Remove the safety stands.
9. Remove the wood blocks and the maintenance key. Examine the machine for safe operation. Put the machine into operation.

2.2.7. Tighten the diaphragm after one week (40 hours).

CAUTION 34: Risk of a Malfunction—Diaphragm bolts can become loose and break the thread lock material in the first week of operation.

- Do this procedure after one week (40 hours) of operation.

1. Let the machine empty then put it in manual operation.
2. Move the automatic doors up. Hold them up with wood blocks.
3. Bypass the safety switches with the maintenance key. Obey the safety instructions. Open the side doors.
4. Lower the container fully. Lower the diaphragm fully. Move the container up fully. If you try to move the container up when the diaphragm is up, the bottom of the container will rub hard against the diaphragm. It is a tight fit. THis can cause damage.
5. **Install the container safety stands.** ***Remove power from the machine (see Notice P1).***
6. Examine the diaphragm bolts for looseness. If a bolt is loose, do these steps:
   a. Remove the bolt.
   b. Clean the bolt threads. Clean the bolt hole with the long tool.
   c. Apply the thread lock compound supplied with the kit (Loctite 242 or the equivalent) to the bolt threads.
   d. Install the bolt fully with the wrench.
   e. Torque the bolts to the value specified in the document BMP050065 (Hydraulic Ram and Diaphragm Assembly). Clean the thread lock compound from the platen.
7. Supply electrical power to the machine. Remove the safety stands.
8. Remove the wood blocks and the maintenance key. Examine the machine for safe operation. Put the machine into operation.

— End of BIPPMM17 —

BIPPMM13 (Published) Book specs- Dates: 20101202 / 20101202 / 20101202 Lang: ENG01 Applic: PPM

2.3. Adjusting Ram Shaft Seal Tightness (and Free Fall Speed)

The ram shaft seals affect 1) oil retention, 2) un-powered drifting down of the ram, and 3) ram free-fall speed. These seals must be tight enough to prevent significant seepage of oil around the shaft and to minimize the drifting down of the ram when the machine is shut down, but loose enough that the seals do not impede ram “free-fall” during operation (see document BIPPMF01 “How the Single Stage Press Hydraulic System Works”). Seal tightness is adjusted at the Milnor factory but the seals tend to loosen over time. So it is likely that the seals will need periodic tightening. Unless the seals are inadvertently over-tightened when adjusted, they are not likely to need loosening. Shaft seal tightness can be adjusted with the ram in place. There is no need to disassemble ram components or drain hydraulic fluid for this adjustment.

Notice 35: Understand the press servicing hazards—Before performing press maintenance, review document BIPPMS01 “Safe Servicing...”

2.3.1. How the Ram Shaft Seals Work

Referring to Figure 18, the ram shaft seal assembly consists of a stack of alternating soft and hard seals that wrap around the shaft at the bottom of the ram cylinder. A seal tension collar bolted to the bottom of the ram cylinder controls seal tightness. Tightening the collar compacts the seals, pushing the soft seals against the ram shaft (i.e., a tighter fit).

The collar must be uniformly tight around its entire circumference. To ensure this, the collar is tightened against shims—not merely against the seals. The same number and thickness of shims must be used at each bolt location. When tightening is needed, the same thickness shim(s) is removed from each bolt location. The two shim thicknesses listed in Table 5, are available.

However, the machine is shipped with thick shims only. Thin shims are available from from the Milnor parts department.

Table 5: Shims Used on Shaft Seal Tension Collar

Type	Milnor Part Number	Thickness	
		Inch	Metric
Thick	15U314C	0.073	1.85 mm
Thin	07-10237	0.05	1.27 mm

Figure 18: Shaft Seals and Related Components

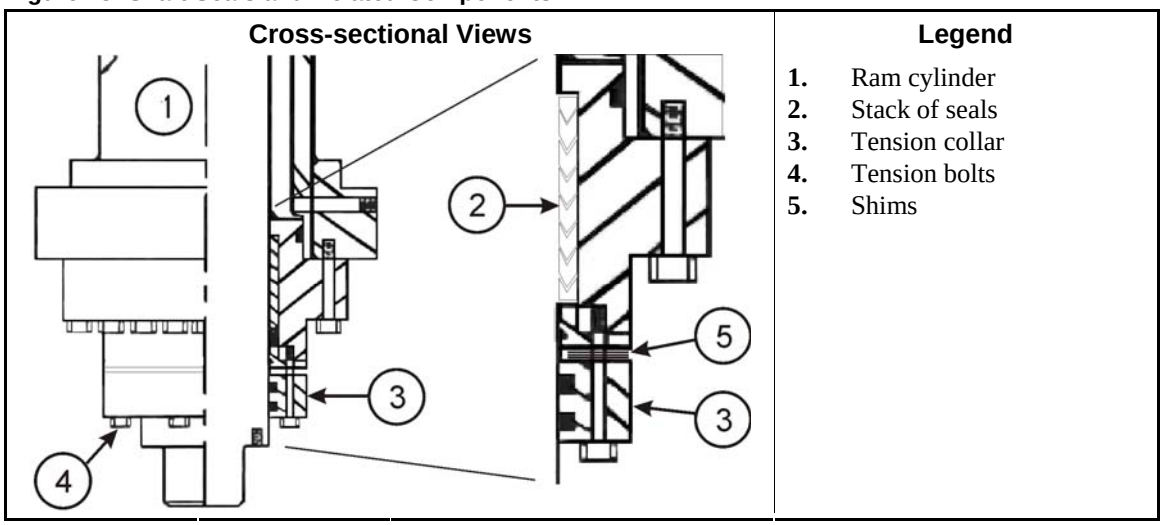

2.3.2. Seal Tightness Adjustment

CAUTION 36: Risk of Costly Machine Damage—A nick or dent in the ram shaft will likely abrade seals and cause the ram to leak oil. The ram shaft may require replacement.

- Use care not to hit the shaft with tools when working close by.

1. Permit the press to empty of goods.
2. use the *Manual* mode to fully lower the can and ram. With the can and ram (diaphragm) resting on the bed, **lockout/tagout power** at the external disconnect switch.
3. Referring to Figure 19, tighten the shaft seals as follows (power locked out / tagged out):
   a. Loosen all of the seal tension collar bolts. Do not remove any bolts yet.
   b. Using a wooden wedge as shown in Figure 19, tap the seal tension collar downward.
   c. Remove one tension bolt, remove a thick shim (see Table 5) from the shim stack above that bolt, then reinstall the bolt.
   d. Repeat Item 3.c, removing one thick shim per stack, until all eight bolts are done.
   e. Tighten the bolts using an alternating bolt tightening pattern as shown in Figure 19. Tighten to the torque specified for this type of bolt in “Fastener Torque Specifications”.
4. Restore power and return to automatic operation. Observe press operation to ensure that ram “free fall” speed is acceptable. If the ram descends too slowly, It will be necessary to repeat this procedure, slightly increasing shim thickness. Use whatever combination of thin and thick shims provides an overall thickness between that before and after the adjustment just made.

Figure 19: Seal Tightness Adjustments

Loosening the Tension Collar

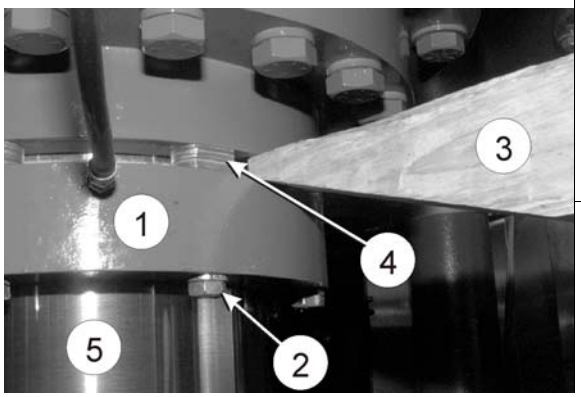

Typical Alternating Bolt Tightening Pattern

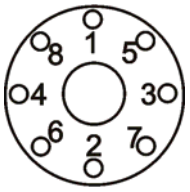

Legend

1. Tension collar
2. Tension bolts
3. Wooden wedge
4. Shims
5. Ram cylinder shaft

— End of BIPPMM13 —

BIPPMM15 (Published) Book specs- Dates: 20101202 / 20101202 / 20101202 Lang: ENG01 Applic: PPM

2.4. Understanding and Setting Press Water Levels

A large amount of reusable water is collected by the Milnor® single stage press during transfer and extraction. The water is held in four water tanks—one on each side and end of the press bed. The water flows from the bed into the two end tanks and from there to the inter-connected side tanks. After the initial in-rush of water at each transfer, the water eventually settles to the same (absolute) level in all four tanks. Water is removed from the tanks through the press return pump, which pumps it to the tunnel washer. A level float assembly with two level settings (commonly used on Milnor machines) provides input to the microprocessor which controls pump operation to prevent overflow and prevent the pump from losing its prime. This requires that levels are set as explained herein when the machine is commissioned. Subsequently, if the tanks overflow, suspect improper levels. Check and adjust accordingly.

2.4.1. Required Levels

In current production machines, the pump outlet and the level float are both located on the larger of the two side tanks. Some older presses have a different arrangement. Although all four tanks share the same absolute level, the water depth can vary from tank to tank. **Regardless of the machine's vintage, always measure levels in the tank that the pump is connected to.** Lift the tank lid and observe the components shown in Figure 20. Level float components must be adjusted so that the low and high levels occur in this tank at the positions shown.

Figure 20: Correct Low and High Levels

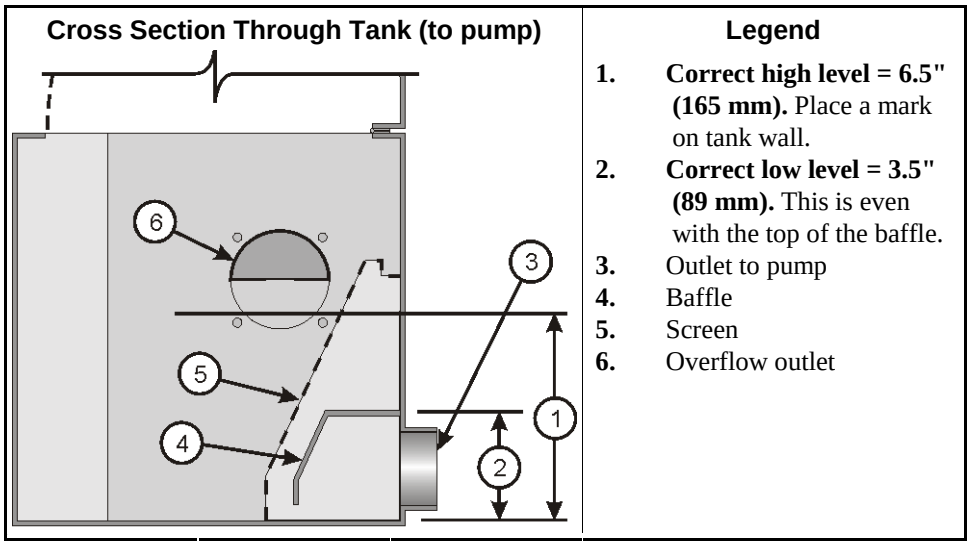

2.4.2. How to Set the Levels Accurately and Avoid Overflow

CAUTION 37: Risk of Overflow—If the pump loses its prime during operation, it can take a minute or more for the pump to self-prime, during which time water entering with an incoming load will likely overflow the tanks.

- Do not allow the pump to suck air. Maintain the specified low level setting.

It is very difficult to achieve accurate settings unless the water is calm and the level remains static. For accuracy and to avoid overflow, do not attempt to adjust levels during operation. Shut the machine down and use a garden hose to fill (or siphon out) the tanks to the specified level.

Figure 21 shows the level float assembly schematically and the relationship between levels, switches, and clips. With the tanks filled to the specified level (low or high), adjust the position of the corresponding clip on the float rod so that the switch contacts make (or break) at that level. If you can hear the switch “click”, adjust levels with power off. Otherwise, run the press at idle but disable the pump by setting the *Press Return Pump* switch *off*. You can then have an assistant observe the switch inputs on the display (see reference manual) and announce when the input changes state (the display changes between + and -). This avoids having the level change due to pump operation. For low level, you should listen for the click (or watch for the display to change) when the float rod is **descending.** For high level, it should be when the rod is **rising.**

Figure 21: Level Float Components Important in Setting Levels

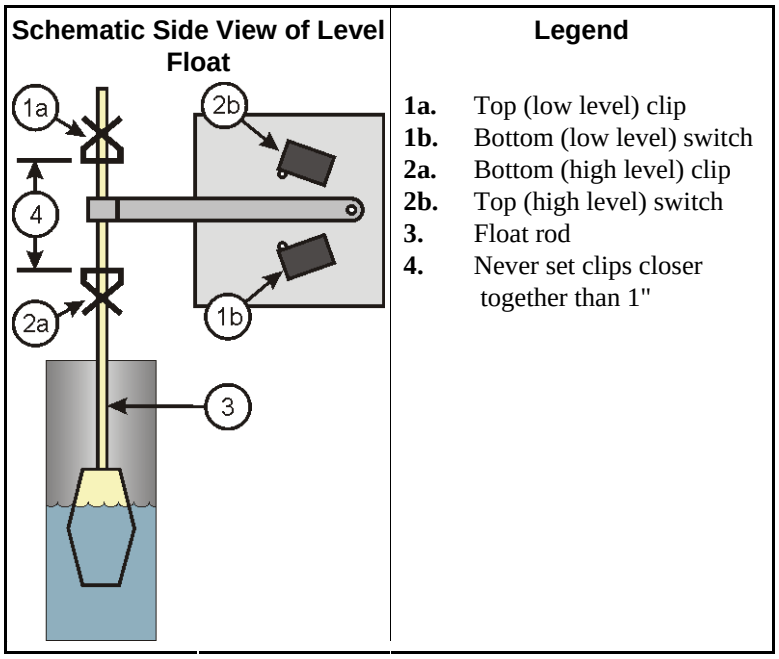

Set **low** level as follows:

1. Fill (or drain) the tanks precisely to low level.
2. Lower the bottom (high level) clip so that is does not interfere with this setting procedure.
3. The setting will be made with the **top** clip. Set this clip so that it is just high enough on the float rod to permit the rod to float.
4. Lift the float rod slightly with your finger, then permit it to slowly descend until either the bottom (low level) switch actuates or the rod floats. If the rod floats before actuating the switch, lower the clip about 1/16" (2 mm) and try again. Repeat this process until the switch actuates when the rod descends.

Set **high** level as follows:

1. Fill the tanks precisely to high level.
2. The setting will be made with the **bottom** clip. Set this clip so that it is just low enough on the float rod that the rod floats unrestrained.
3. Push down on float rod (push the float into the water) slightly, then permit it to slowly rise until either the top (high level) switch actuates or the rod stops rising. If the rod stops rising before actuating the switch, raise the clip about 1/16" (2 mm) and try again. Repeat this process until the switch actuates when the rod rises.

— End of BIPPMM15 —

BIPPMM09 (Published) Book specs- Dates: 20101202 / 20101202 / 20101202 Lang: ENG01 Applic: PPM

2.5. Servicing a Misaligned ("Jammed") Can Assembly

The receiving chute and can assembly (the can) is connected to the can cylinder rods with taper bushings (see Figure 22) that will slip upward on the rod, reducing the risk of damage, in the event that goods or other objects obstruct the can's descent and "jam" it out of alignment.

Notice 38: When the receiving chute and can assembly becomes " jammed", STOP!—Before returning to normal operation, inspect for, and correct damage and/or misalignment, as explained herein.

Notice 39: Understand press servicing hazards—Before performing press maintenance, review document BIPPMS01 “Safe Servicing...”

Figure 22: Can-To-Cylinder Rod Mounting Components

Side View (spacer not used)

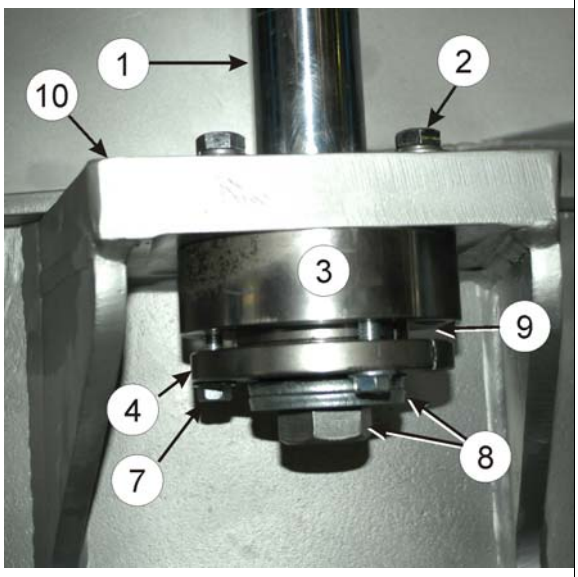

Exploded View

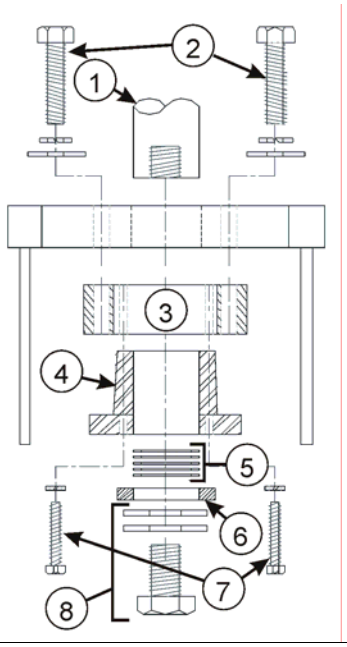

View From Below (spacer used)

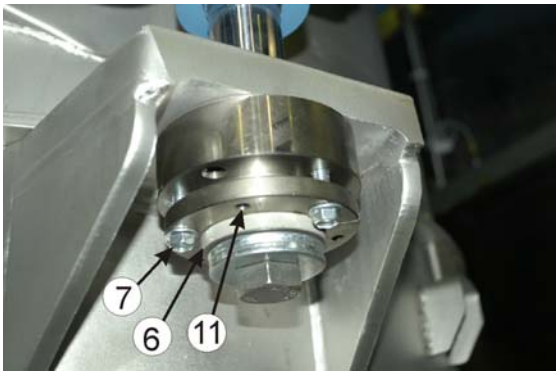

Legend

1. Cylinder rod
2. Hub mounting bolts
3. Hub
4. Taper bushing
5. Shims
6. Spacer (if used)
7. Bushing bolts
8. Large flat washers and rod end bolt
9. Bushing-to-hub air gap
10. Can mounting ear
11. Push-off holes

2.5.1. Inspecting the Can After a “Jam”

Visually inspect the can and the cylinders and rods for damage and misalignment. If the can appears operable, use the *Manual* mode to move the can up and down, observing it carefully. Referring to Figure 22, some problem signs include:

- The spacer (Item 6) or washers (Item 8) are no longer pressed against the bottom of the bushing (Item 4), indicating the bushing has slipped upward on the cylinder rod (Item 1).
- The lowered can assembly does not rest flat against the press bed.
- The can rubs against the ram or other components or moves with a jerking motion. This may indicate a bent cylinder rod (Item 1).
- Can cylinder(s) leak oil.

If the can appears in good working order, return the machine to service. Otherwise, continue.

2.5.2. Dismounting the Can

WARNING 40: Crush and Strike Hazards—A can assembly that is temporarily twisted as a result of a "jam" will forcefully spring back to its original shape when bolts are loosened.

- Disassemble cautiously.

1. Using *Manual* mode, raise the ram and secure it with the safety bars (see safety support instructions). Leave the safety bars in place until the procedures call for removing them.
2. Lower the can onto the press bed. Lock out/tag out power to the machine.
3. Referring to Figure 22, remove the mounting components on **each** side of the can as follows:
   a. Remove the rod-end bolt and attached shims, spacer and washers (Item 6 and Item 8).
   b. Observing warning statement 40 , carefully remove all three bushing bolts (Item 7).
   c. Thread bolts into the three bushing push-off holes (Item 11). Observing warning statement 40 , alternately tighten bolts until the bushing and hub separate.
   d. Restore power. Using *Manual* mode, raise the can cylinder rods until they clear the can mounting ears. Lockout/tagout power.
   e. Unbolt and remove the hub (Item 3).
   f. Clean the bushing, hub and cylinder rod with Loctite Primer N™ (Milnor P/N 20C006P) or an equivalent product.

2.5.3. Replacing Can Cylinder(s), If Required

If a cylinder rod is bent or the cylinder leaks oil, the can cylinder must be replaced with a new or rebuilt one. If the cylinder to be replaced is directly behind the press discharge door (discharge left or discharge right), the discharge door must be removed to provide working room. **Perform this work with the ram secured up with the safety bars, the can dismounted and resting on the press bed, and power locked out/tagged out.** Disassembly and re-assembly are straightforward for the competent technician and not explained here. Refer to the "Receiving Chute and Can" and "Safety Unload Door Assembly" parts documents for more information.

2.5.4. Remounting and Positioning the Can

The can must be mounted on the can cylinder rods so that each rod reaches its internal stop just as the can touches the press bed. The mounting hardware (hub, bushing, bolts, etc.) must be those specified on the "Receiving Chute and Can" parts document for proper strength and fit.

> **Note 6:** The current design uses a hub manufactured by Milnor, attached with 1/2" x 2-1/2", grade 8, chrome-plated mounting bolts, stainless steel flat and lock washers. The bushing is purchased by Milnor, but mounted with 1 3/4" (4.4 cm) flange bolts (not the bolts supplied by the bushing manufacturer).

1. Disconnect the electrical feed to both of the can at bottom (lower) can proximity switches.
2. The can must be resting on the sheet of cardboard on the press bed and positioned so that the cylinder rods (Item 1 in Figure 22) are directly above the can mounting ears (Item 10), so that they will enter the mounting ears. Restore power to the machine and, using *Manual* mode, carefully extend the cylinder rods into the mounting ears fully (until the cylinders "bottom out"). Lockout/tagout power.
3. Referring to Figure 22, install the mounting components on **each** side of the can as follows:

   a. Reinstall the hub. Tighten the mounting bolts only enough to hold the hub snug against the mounting ear. The bolts will be tightened later, but for now, the hub must be able to move slightly, from side to side.
   b. Install the bushing and torque the bushing bolts to **360 inch-pounds.** After tightening, a gap must exist between the bushing and hub (Item 9). If not, replace the hub and bushing.
4. Reconnect the electrical feed to the two can at bottom proximity switches.
5. Restore power then, using *Manual* mode, move the can up and down, looking for signs of improper positioning of the can on the cylinder rods, such as:
   - The can cylinders fail to “bottom out” as the can touches the bed.
   - The can presses into the conveyor belt with enough force to leave an indentation.
   - The can twists as it reaches bottom.
   - Daylight is visible between the fully lowered can and the press bed.
   - An object the thickness of a credit card slides easily under the can. It should be very difficult or impossible to insert the object anywhere around the can.
6. If necessary, readjust mounting components (with power locked out/tagged out), as necessary until the above checks indicate the can is properly positioned.
7. The rod-end bolt, shims, spacer, and washers must be reinstalled onto the end of each cylinder rod, which may be slightly inside of, or protruding from the bottom of the bushing. The bolt, washers and spacer (if used) ensure that the bushing cannot slip off the end of the rod. The shims ensure that the rod-end bolt can be tightened securely without moving the position of the bushing on the rod. Referring to Figure 22, install these components on **each** side of the can, as follows:
   a. If the rod end protrudes from the bushing, install the spacer against the bushing. Otherwise, the spacer is not needed.
   b. Install the number of 1/16" (1.7 mm) shims needed to fill any gap between the rod end and the bottom of the bushing or spacer.
   c. Install the large washers and rod-end bolt. Tighten the bolt.
8. Remove the safety bars that secure the ram then restore power to machine. Fully lower the ram into the can. This will ensure that the can is aligned with the ram when the hub bolts are tightened. Lockout/tagout power to the machine.
9. Tighten the hub mounting bolts left loose in Item 3.a. **Torque bolts to 78 foot-pounds.**
10. Restore power and using *Manual* mode, raise the ram.
11. The bushing bolts will normally loosen after operation. **Repeat the following tightening procedure daily, over the next five operating days.** An assistant is required for this:
   a. Allow a normal load of goods to transfer to the press, or at minimum, place a sufficient quantity of goods in the can so that the ram will not reach the ram full down proximity switch, preventing full pressing pressure from being achieved. This requires about 50 to 60 pounds (23 to 27 kilograms) of goods.
   b. Using *Manual* mode, the assistant lowers the ram and maintains *ram down* pressure by holding the *down* button while bolt torque is checked (next step).
   c. While full pressing pressure is achieved, torque the bushing bolts (to 360 inch-pounds) and the hub mounting bolts (to 78 foot-pounds).
   d. The assistant raises the ram (not the can).
   e. Repeat Item 11.b through Item 11.d two more times.

— End of BIPPMM09 —

BIPPMM12 (Published) Book specs- Dates: 20101202 / 20101202 / 20101202 Lang: ENG01 Applic: PPM

2.6. Servicing the Integral Conveyor

Milnor has continually improved the single stage press integral conveyor to reduce and simplify maintenance, through the following features (listed from most recent to earliest):

- improved belt material with minimal longitudinal shrinkage due to press pressure
- taut belt switches to sense when the belt is too tight and alert the operator, via the “Taut belt - Check belt rollers” error message and the signal lamp.
- a support bracket design that eases removal and replacement of the tension roller
- heftier bearings to help withstand the corrosive environment and severe load conditions
- a plastic scraper on the drive roller that minimizes wrapping of goods around the rollers

This instruction applies to machines that have taut belt switches (presses manufactured after date code 04436, with software version 20006D/WUMILSSPA or later). However, it also, in large part, accommodates older presses with only some or none of the above features. This document supersedes document BIPPMM07 “Installing the Endless, Woven Style Press Belt...” as well as previous versions of this document (titled “Clearing Taut Belt Errors”).

2.6.1. Conditions Requiring Servicing and Summary of Procedures

Section 2.6.1.1 through Section 2.6.1.5 describe the problems that are most likely to require conveyor servicing and summarize their corrective procedures. Detailed instructions follow these sections. All conveyor servicing described herein must be performed with:

1. the ram up and secured with the safety bars,
2. the can up and secured with wood blocking,
3. the discharge door up and secured with a metal rod such as a screwdriver shaft, and
4. the manually-lifted access doors open.

All servicing except for parts of the tracking adjustments must be performed with power locked out/tagged out.

2.6.1.1. Belt Too Tight Causing “Taut Belt...” Error (Tension Adjustment)—The “Taut Belt...” error indicates that the belt is too tight. The controller only monitors the taut belt switches when the belt stops moving (to minimize nuisance trips). Typically a taut belt condition is caused either by goods wrapped around a roller (which the drive roller plastic scraper minimizes) or belt shrinkage (which the improved belt material minimizes). In the first situation, the belt must be partially removed, the roller freed of foreign material and the belt re-installed (see Section 2.6.1.3). In both cases, proper belt tension and taut belt detection sensitivity must be restored via the pre-load and taut belt switch clearance adjustments explained in Section 2.6.4. Once the problem is resolved, the “Taut Belt...” error clears automatically.

2.6.1.2. Belt Not Centered (Tracking Adjustment)—On the load end of the conveyor, pneumatic tracking controls compensate for minor left/right creeping of the belt. However, if these controls actuate frequently or are ineffective in centering the belt, tracking must be adjusted via the belt tracking adjustments explained in Section 2.6.5. The preventive maintenance schedule calls for checking this tracking daily. Selection 10 “Track Belt”, in *Manual* mode is a convenient way to observe belt tracking. Belt tension and tracking must also be checked and adjusted whenever the belt is removed for roller cleaning or the belt is replaced.

There is also a tracking adjustment on the unload end of the conveyor. Once adjusted at the Milnor factory, this tracking should not need subsequent adjustment unless the setting is inadvertently changed. In such case, refer to Section 2.6.6.

2.6.1.3. Foreign Material (Goods) Wrapped Around Rollers—If goods wrap around a conveyor roller, this effectively increases the roller diameter. This can severely increase belt tension and the load on the roller bearings. If this condition is addressed soon enough, goods can be cut and unwrapped from the roller fairly easily. But the longer such a problem is left unresolved, the harder it will be to free the roller of the foreign material, and the more likely that the belt and roller bearings will be damaged. Correct the problem when it first arises. Milnor is not responsible for components damaged through neglect.

Referring to Figure 23, goods wrapping is more likely to occur at the drive roller, but it can occur with any of the four rollers. To gain access to the rollers, the technician first removes the tension roller (load end of a straight-in press). Then, on the discharge end (drive roller end) of the machine, he pulls the belt out of the machine, exposing all of the rollers. This procedure is also used in belt replacement.

Figure 23: Conveyor Belt and Rollers

Schematic Side View

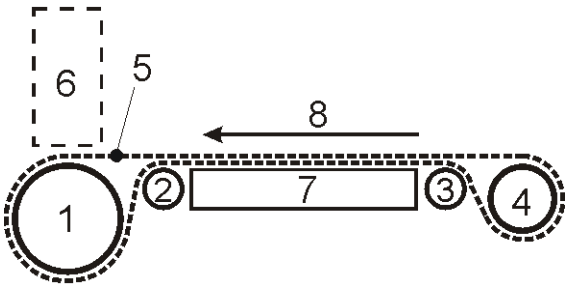

Legend

1. Drive roller (on discharge end)
2. Snubber roller
3. Tracking roller
4. Tension roller (on load end)
5. Endless woven belt
6. Drive motor and gear reducer
7. Press bed
8. Flow of goods

When cleaning rollers, use care not to damage the roller surface, especially the grip surface on the drive roller. No other procedures are provided herein for roller cleaning.

2.6.1.4. Belt Worn or Damaged—As shown in Figure 23, the conveyor uses an endless belt. When replacement is necessary, the tension roller on the load end of the conveyor (the load end of a straight-in press) is removed and the drive roller on the discharge end, partially removed. With the tension roller removed, the old belt is then pulled out of the machine from the discharge end and slipped off of the partially removed drive roller. The new belt is installed in the reverse order. Tension roller removal is made easier by the modified tension roller bracket design (see Section 2.6.3.1). The bracket on older presses can be so modified on site without removing it. After replacement, the new belt must be properly tensioned and the tracking adjusted.

2.6.1.5. Hardware Deteriorated—All conveyor components are susceptible to deterioration from the corrosive and high load environment typically present in this application. Whenever the need arises to remove or replace the belt, the technician may find that related hardware such as bolts, nuts, bracketry, and bearings have deteriorated to the point where they should not be returned to service. It is advisable to assess the condition of this hardware before belt removal or replacement and have any needed replacement parts on hand. Refer to the conveyor parts documents for your machine for part numbers.

2.6.2. Preparing the Press for Safe Conveyor Servicing

Notice 41: Understand the press servicing hazards—Before performing press maintenance, review document BIPPMS01 “Safe Servicing...”

1. Make sure the press is empty of goods and access the *Manual* mode.

2. Set the door interlock bypass key switch to the *Maintenance Only* position and open the press access doors in strict compliance with the safety instructions.
3. Raise the can, then the diaphragm to full up.
4. **Secure the raised ram with the safety bars.** Remember that the unrestrained ram can drift down even with power off.
5. Using two, 2 x 6 inch (minimum) wood planks, lay the planks on end, across the top of the splash guards (Figure 24). Although the can hydraulic cylinders have check valves intended to prevent the can from drifting down, the wood planks protect against drifting down of the can resulting from a hydraulic leak.
6. Raise the discharge door.
7. Secure the discharge door up by inserting a screwdriver through the hole provided in the upper left of the door frame (Figure 25).
8. Shut down the machine and lockout/tagout power at the external disconnect switch.

Figure 24: Wood Planks Under Raised Can

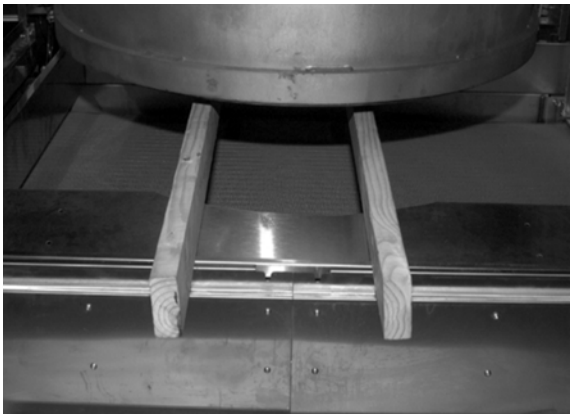

Figure 25: Securing the Door

2.6.3. Belt Removal and Installation (for access to rollers or belt replacement)

The major tasks in belt removal and installation are explained under this section. The specific tasks and the order they are to be done varies with the objective (e.g., belt replacement, roller cleaning, etc.). Hence, you may need to perform only certain tasks and not necessarily in the order presented here.

Notice 42: Malfunction risk—As you work, carefully note the arrangement of all hardware removed for proper replacement. This is especially important for washers, spacers, shaft collars and the like, that must be properly positioned for correct roller alignment and functioning. The conveyor parts documents for your machine will also assist in proper component positioning.

2.6.3.1. Facilitating Tension Roller Removal On Older Presses—The tension and tracking rollers and related hardware mount to the side wall of the load-end water tank. The current design has a slot in the side wall (see Figure 26) through which the roller shaft can be withdrawn upward. If your machine has this slot, proceed to Section 2.6.3.2. Otherwise, your press has an older design. You have the choice of cutting a slot similar to the current design (see Section 2.6.3.1.1), or removing the tension roller by performing additional disassembly (see Section 2.6.3.1.2).

2.6.3.1.1. Cutting a Slot for Roller Removal—Although the current design provides slots on both tank side walls (both ends of the roller), you need only cut a slot on one side (the most convenient side for your situation). With hardware removed as needed, cut the slot as shown in Figure 27. Once this is done, you can follow the instructions in Section 2.6.3.2.

Figure 26: Tank Left Side Wall With Slot

Figure 27: Tank Left Side Wall—Slot Dimensions

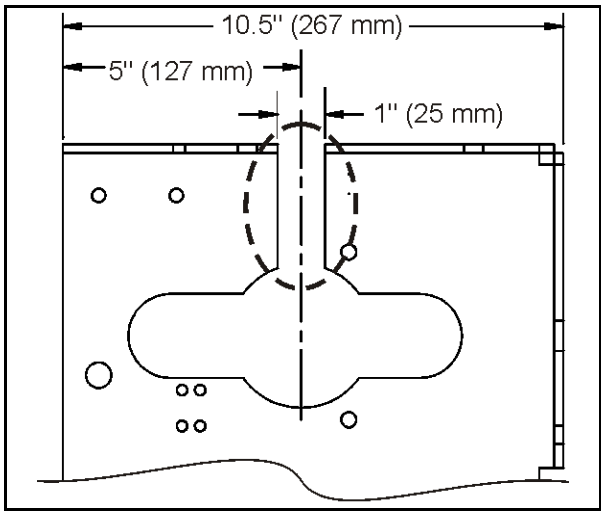

2.6.3.1.2. Performing Additional Disassembly—Step-by-step instructions for removing/replacing the tension roller on older presses (without the slot) varies somewhat with the age (specific design) of your press and is not covered here. However, a capable technician should be able to determine this, observing the following points:

- Although your press may have a hole in the side wall of the tank large enough to withdraw the roller sideward, you would need to remove the side water tank for clearance. You can remove the roller upward more easily.
- You will need to loosen/remove the locking collars on both sides of the tension roller. The ease of roller removal depends on the extent to which you can move the shaft and bearings (one on each end) within the roller. These components may be corroded.
  - » If you can completely remove the tension roller shaft and bearings from within the roller, you should be able to lift the roller out. On older style tension rollers, the roller bearings (one on each end) are held in with set screws. On the newer style roller, the bearings are press fit both around the shaft and within the roller. Using care not to damage components, you should be able to separate these components with a rubber hammer.
  - » Even if you cannot remove the tension roller bearings, you will still need to slide the shaft a small amount in and out of the roller as you work. You will also need to remove the tracking roller to make room for tension roller removal.
- Some aspects of tension roller removal/replacement are the same on older designs as on the current design explained in Section 2.6.3.2.

2.6.3.2. Removing/Replacing the Tension Roller (Current Design)—The following are the steps in order of removal. Replace components in the reverse order.

1. Remove the top and both side cover plates from the load-end water tank.
2. On your machine, identify the components shown in Figure 28.

Figure 28: Left Side, Load End Roller Hardware (right side similar)

Left Side View with Cover Removed

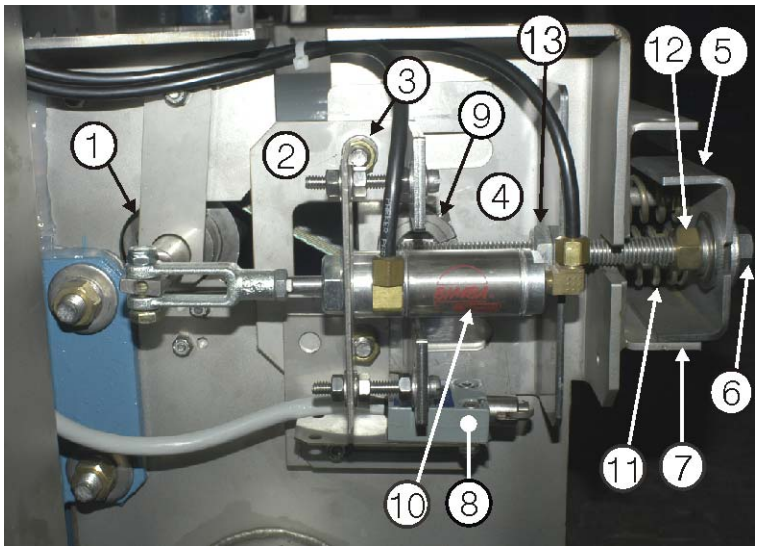

Legend

1. Tracking roller
2. Tracking bracket
3. Bracket retaining nut
4. Tension adjustment bracket
5. Tension bar (channel)
6. Tension bolt (hex tap bolt)
7. Bar support channel
8. Taut belt switch
9. Locking collar on tension roller shaft
10. Air cylinder for automatic tracking
11. Tension springs
12. Tension bolt lock nut
13. Tension bolt clinch nut

3. On both sides of the machine, loosen the tension bolt lock nut (item 12) and relieve belt tension (turn the tension bolt (item 6) counterclockwise) to the point where you can remove the clinch nut (item 13) from the bolt.
4. Remove the tension bar (item 5) with its tension springs (item 11).
5. The tension roller and tension adjustment brackets (item 4) move together. Push these toward the unload end of the conveyor to loosen the belt.
6. Remove the outermost locking collar (item 9) from the tension roller shaft. This is the collar on the outside of the tank side wall, that is only used on one side of the roller. On the current design, the two inner locking collars (the ones on the inside of the tank side walls) do not need to be loosened or removed for roller removal. **On re-assembly, don't forget to re-install this collar.**

Tip: On the current design, the following two steps need only be done on one side of the conveyor (the most convenient side for your situation).

7. Remove the bracket retaining nuts (item 3) and tracking bracket (item 2) with all connected components. Let these hang from the end of the tracking roller shaft as shown in Figure 29. It is not necessary to disconnect the air cylinder pneumatic tubing, but the cut tie wraps from around the tubing as needed for ease of work.
8. Remove the tension adjustment bracket (Figure 28, item 4), taking note of the number and position of the bronze washers on the studs the retaining nuts were removed from. **On re-assembly, don't forget to replace the washers and verify that the tension adjustment bracket still slides freely after the retaining nuts are tightened.**
9. On the free end of the roller, guide the roller shaft upward through the slot in the tank side wall. When the roller is clear of the side wall, withdraw the roller shaft from its retaining bracketry on the other side and withdraw the roller from the belt.

10. On the discharge end, pull the belt through the press and clear of the bed (Figure 30).

Figure 29: Tracking Bracket and Related Components Hanging from Tracking Roller

Figure 30: Pulling Belt Through Press from Unload End

If the work was done for roller cleaning, you can clean the rollers (even the drive roller) without removing the belt completely, provided you use the necessary care not to damage the belt. After re-installing the belt, adjust belt tension and tracking as explained in Section 2.6.4 and Section 2.6.5. For complete belt replacement, proceed to Section 2.6.3.3.

2.6.3.3. Partially Removing/Replacing the Drive Roller (for belt replacement)—

Referring to Figure 31, the drive roller is supported by self-aligning flange bearings (item 5) mounted to the side walls of the unload end water tank. The belt is driven by a motor and gear reducer, which are braced by a torque arm (item 1). With the torque arm loosened or removed (see caution statement **43**) and the bearing on the non-drive end of the drive roller un-mounted, you can pivot that end of the roller away from the machine enough to slip the belt off or onto the roller. Normally, no other disassembly is required.

CAUTION 43: Risk of Injury and Damage—With the torque arm bushing removed, the weight of the gear box/motor will cause it to swing around the shaft, if not otherwise supported.

- Support the gear box on blocking before disconnecting the torque arm.
- Observe all precautions herein.

Refer to the “Unload End Drive Assembly” parts document for your machine for part identification and assembly details. The steps in freeing the drive roller for belt replacement follow. Re-assembly is performed in the reverse order. Refer to Figure 31 for the item numbers listed in these steps:

1. If your machine has a belt scraper assembly (item 12), remove it for clearance. **On re-assembly, set the blade-to-belt clearance as shown in item 13.**
2. Remove the drive-side photoeye (item 2) to protect it from damage and provide clearance.
3. Place wood blocking under the gear box. This blocking must prevent the gear box from rotating on the roller shaft once the torque arm is disconnected.
4. Unbolt and remove the torque arm bushing components (item 3), taking note of how they are assembled (see also your “Unload End Drive Assembly” parts document). Also loosen the torque arm mounting bolts. This will free the gear reducer and motor to move when the drive roller is pivoted outward.

Figure 31: Components Used in Partially Removing Drive Roller (your press may be opposite hand)

Drive Side (can be on either side of press)

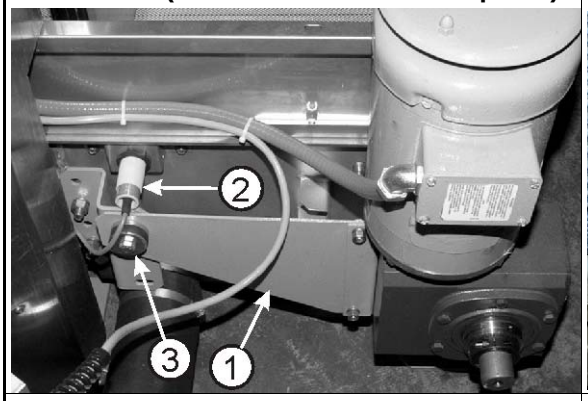

Scraper Assembly

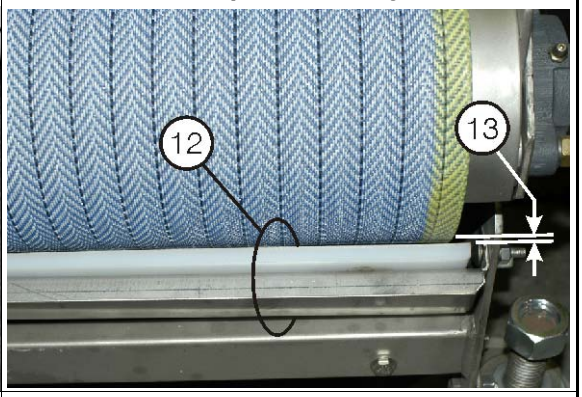

Non-drive Side (either side of press)

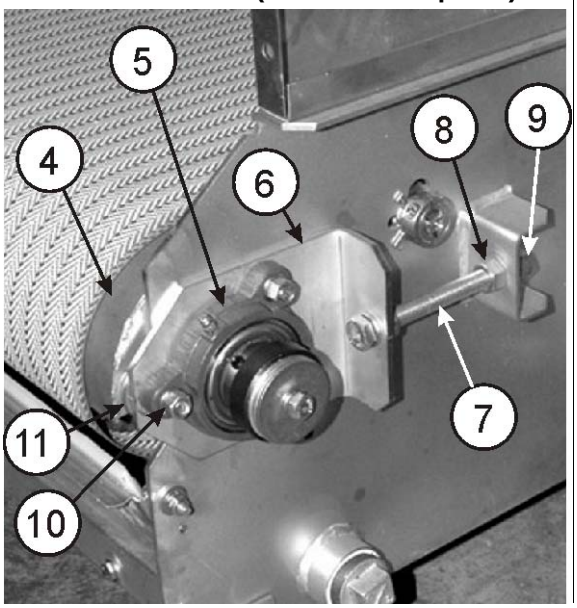

Legend

1. Torque arm
2. Photoeye
3. Torque arm bushing
4. Fender
5. Bearing
6. Tracking adjustment bracket
7. Adjustment bolt
8. Nut used to hold adjustment
9. Outermost nut
10. Mounting bolt closest to unload end
11. Spacers—this bolt only
12. Scraper assembly
13. Blade-to-belt clearance = 1/16" to 1/8" (2 to 3 mm)

Tip: In the next step, you will free the non-drive end of the drive roller so that this end of the roller can pivot outward. Two techniques will save time and possible trouble in re-assembly, if conditions on your machine permit:
1. Do not loosen or remove the bearing, shaft collars or spacers from the roller shaft.
2. Disconnect the roller alignment bracket such that it retains its setting when reassembled

5. On the non-drive end, remove either all three, or only two bearing mounting bolts, depending on whether your machine has fenders (item 4) at the ends of the drive roller, as follows:

   Fenders provided (newer, and retrofitted models)—The bearing mounting bolts also hold the fenders in place. Remove all three bolts, but on the bolt closest to the unload end (item 10), be sure to retrieve all spacers. **These must be replaced on re-assembly.**

   No fenders (older models)—Remove only the two bolts farthest from the unload end.

6. If your machine has fenders, remove the fender on this end of the roller.
7. The roller should now be held only by the tracking adjustment bracket (item 6) and its adjustment bolt (item 7). The adjustment bolt is fastened to a welded bracket with two nuts whose position on the bolt establishes the alignment setting. Wrap tape around the innermost of these two nuts (item 8) to hold its position on the bolt, then remove the outermost nut (item

9) and lock washer. **On re-assembly, the adjustment bolt must be reattached such that this setting is retained. Otherwise, realign the drive roller as explained in Section 2.6.6.**

8. Carefully pull the free end of the drive roller only far enough away from the conveyor bed to be able to slip the belt off of, or onto the roller. As the roller and shaft pivot about the drive-side bearing, make sure that nothing restricts the gear reducer and motor from moving the short distance needed and that they remain supported by the blocking.
9. Remove the old, and install the new belt on the drive roller. If the belt has arrows printed on it to indicate direction of travel, be sure to orient it properly.

2.6.4. Restoring Proper Belt Tension

There are two pair of adjustments (each adjustment is done on both sides of the conveyor) involving belt tension. Each adjustment has a required setting (a specified distance between components), as shown in Figure 32. Check these measurements and if they have changed, restore them to the required values. Referring to Figure 32, the adjustments are:

Pre-load—sets the amount of compression of the belt tension springs (belt tension) with no dynamic load on the conveyor. Measure the horizontal distance between the inside faces of the tension bar support channel and tension bar channel, as shown in item 1. This is the compressed spring length. Belt shrinkage will cause this distance to shorten, causing the springs to compress too much. Regaining the specified dimension restores proper belt tension. Make the adjustment by loosening the lock nut (item 3) and turning the hex tap bolt (item 2).

Taut belt switch clearance—determines the sensitivity of *Taut Belt* error detection; it does not control belt tension. Measure the the gap between the bracket and the switch actuator (item 4). This is distance the tension roller must travel before the tension roller bracket touches the switch actuator. The switch bracket has a slotted mounting hole (item 5) for adjusting the switch position.

Figure 32: Belt Tension Required Settings

Where Adjustments Are Made (on one of two sides)

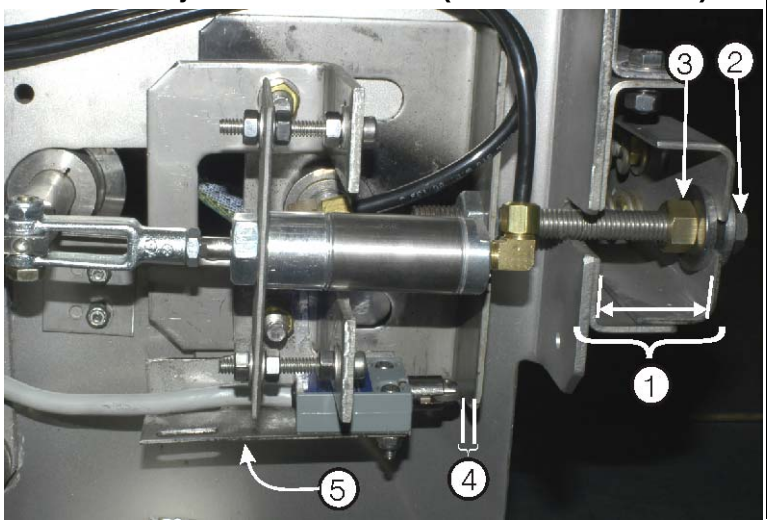

Legend

1. Pre-load = 1 5/8" (41 mm)
2. Hex tap bolt (adjusting bolt)
3. Locking nut
4. Taut belt switch clearance = 1/16" to 1/8" (1.5 to 3 mm)
5. Slotted mounting hole in switch bracket (not seen in this view)

2.6.5. Adjusting Belt Tracking On the Load End

Ideally, the conveyor belt should remain centered on the press bed during operation. Pragmatically, it is likely to creep right or left. The pneumatic tracking system assists in keeping the belt centered. This system consists of a pair of pneumatic switch assemblies (air valve, paddle actuator and hardware) and air cylinders—one set on each side of the belt. When the belt creeps

left or right and pushes on a paddle, that air valve opens, actuating the air cylinder, which changes the angle of the tracking roller slightly, moving the belt away from that side of the bed. If the tracking system actuates frequently or cannot successfully center the belt, adjust belt tracking as explained herein.

Supplement 1

Understanding Left/Right Terminology

When this instruction refers to the conveyor's left side or right side, this means when viewed **in the direction of the flow of goods.** This would be your left or right if you were standing at the load end of the conveyor (the end with the tension roller—see Figure 23) and facing the press. This is physically possible only if you have a left-turning or right-turning press. With a straight-through press, you would be standing where the loading device (e.g., the tunnel washer) is. Although it may not be possible to view the conveyor on your press from this vantage point, imagine it whenever this instruction uses the terms “left” or “right.”

Figure 33 shows how the tracking roller must be angled to compensate for left/right creeping.

Figure 33: How to Angle the Tracking Roller to Correct Belt Creeping

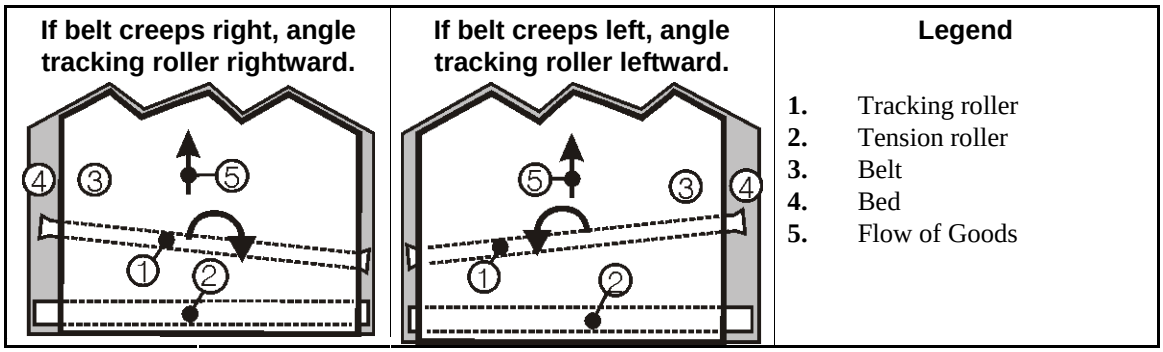

Adjustments are made with the components shown in Figure 34. Referring to this figure, adjust the tracking as follows:

1. Initially, adjust the tracking roller so that it is perpendicular to the press bed. To do so, adjust the air cylinder bracket lock nuts (item 1), on both sides of the conveyor so that there is 1/2" (13 mm) of thread behind the last lock nut, as shown in item 2.
2. Restore power to the machine.
3. Using *Manual* mode and selection 10 “Track Belt”, run the belt and observe how it tracks. The belt will tend to track to the looser side.
4. Lockout/tagout power to the machine.
5. To reposition the tracking roller, you will use the air cylinder bracket lock nuts (item 1) to move the air cylinder mounting bracket (item 3) closer to, or farther away from the load end of the conveyor. **Do not loosen the adjusting bolt lock nuts (item 4).** Use Step 6a or 6b, as appropriate, to adjust the angle of the tracking roller in small increments.

6a. If the belt creeps to the **right**, make the left side looser, as follows:

   1. Adjust the left side air cylinder mounting bracket so it is 1/16" (0.4 mm) farther away from the load end of the conveyor.
   2. Adjust the right side air cylinder mounting bracket 1/16" (0.4 mm) closer to the load end.

6b. If the belt creeps to the **left**, make the right side looser, as follows:

   1. Adjust the right side air cylinder mounting bracket 1/16" (0.4 mm) farther away from the load end of the conveyor.

2. Adjust the left side air cylinder mounting bracket 1/16" (0.4 mm) closer to the load end.

7. The pneumatic switches are properly adjusted when the paddles (item 6) are touching the belt and the the air valve (item 5) will open if the belt moves 1/8" (3 mm) closer to the switch. These switches should not need to be removed or adjusted when performing the servicing described herein. However, if this hardware is removed (as to replace components), adjust the switch assemblies as follows:
   a. Make sure the belt is precisely centered on the bed.
   b. With air on and the assembly mounting bolt loose, move the switch assembly toward the belt just until the air valve opens (as determined by the sound of air flowing), then back the assembly away from the belt 1/8" (3 mm) and tighten the mounting bolt.

Figure 34: Load End Belt Tracking Adjustments

Tracking Roller Adjustment Components On Left Side (right side similar)

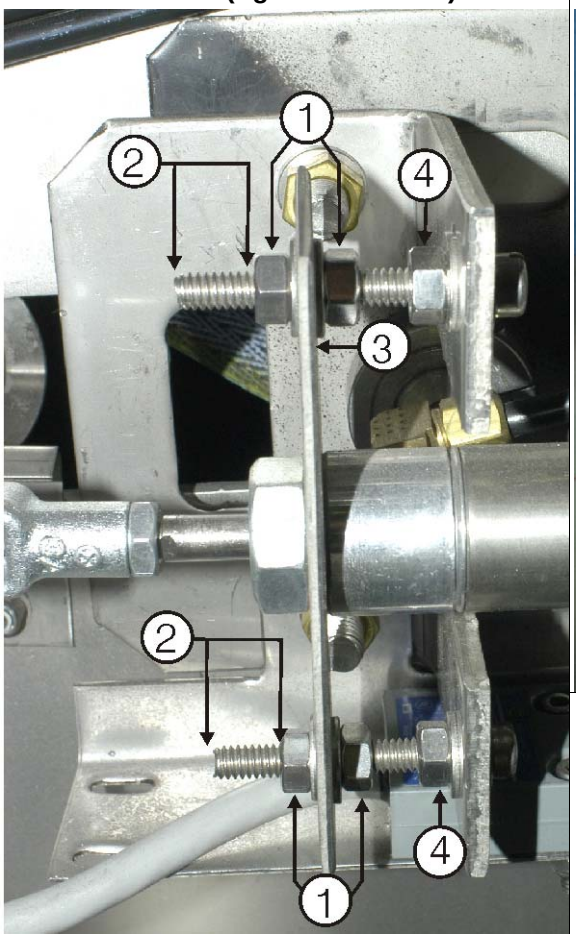

Pneumatic Switch Assembly (air valve, paddle (actuator) and mounting hardware)

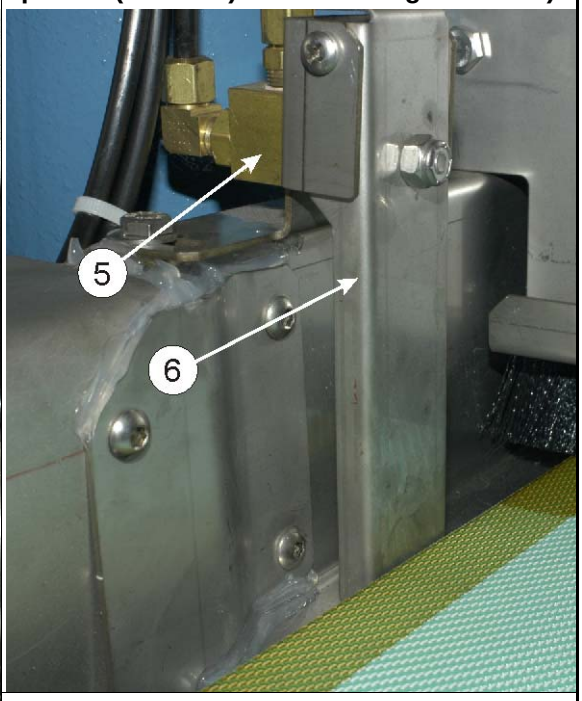

Legend

1. Air cylinder bracket lock nuts
2. Initial setting = 1/2" (13 mm) exposed thread
3. Air cylinder mounting bracket
4. Bracket lock nuts (do not loosen)
5. Air valve
6. Paddle (actuator)

2.6.6. Adjusting Belt Tracking On the Unload End

Unload end tracking is set at the Milnor factory and should not need subsequent adjustment. However, the setting can be lost in the process of belt replacement or other servicing, if not performed carefully.

Unload end tracking is adjusted by moving the non-drive end of the drive roller in or out with the adjustment components shown in Figure 31 (items 6 through 9). The unload end adjustment is correct when the drive roller is exactly perpendicular to the longitudinal centerline of the bed, but because there is no convenient feature of the bed to measure this from (as, for example, with a carpenter's square), adjust the tracking as follows:

1. Visually align the roller with the unload-end water tank. This tank may not be perpendicular to the bed centerline, but it should be close.
2. Run the belt and observe the tracking. If the belt creeps to either side on the unload end, angle the drive roller so that the end of the roller on the side the belt favors extends farther from the machine relative to the other end of the roller. Continue observing and adjusting the tracking until the belt remains centered.

— End of BIPPMM12 —

Chapter 3
Hydraulic System Troubleshooting

BIPPMF01 (Published) Book specs- Dates: 20101202 / 20101202 / 20101202 Lang: ENG01 Applic: PPM

3.1. How the Single Stage Press Hydraulic System Works

The focus of this document is single stage press hydraulic circuitry and how the hydraulic components function during the various parts of the operating cycle. Refer to the electrical schematic manual—particularly the schematics on microprocessor inputs and electrical valves, and to the programming and operating information in the reference manual for a better understanding of the control logic.

Notice 44: Understand the press servicing hazards—Before performing press maintenance, review document BIPPMS01 “Safe Servicing...”

single stage press—a press extractor that squeezes water from successive batches of wet goods at one pressing position (versus a two stage press that first lightly presses the goods at one position, then fully presses them at another). Pressing leaves the batch of goods compressed into a “cake” that must be subsequently broken apart by basket rotation in a dryer.

cake—a load of goods in a batch laundering system (typically a tunnel system) that has been compacted together by a press extractor into a cake shape. Cakes are moved from the press to dryers via shuttle conveyors designed especially to move (and possibly store) such cakes.

press code—a programmable sequence of one or more operating steps that the press uses to process a particular type of goods. Pressing characteristics that can be specified for a step include pressure, how long the pressure is applied, maximum step duration (regardless of programmed pressure) and whether the ram rises at the end of a step. The press code also provides a choice of motions the press will use to dislodge the cake at the end of the cycle.

The major components used to press the goods and shape the cake are shown in Figure 35.

Figure 35: Major Press Components

Viewing Load End of Press	Legend
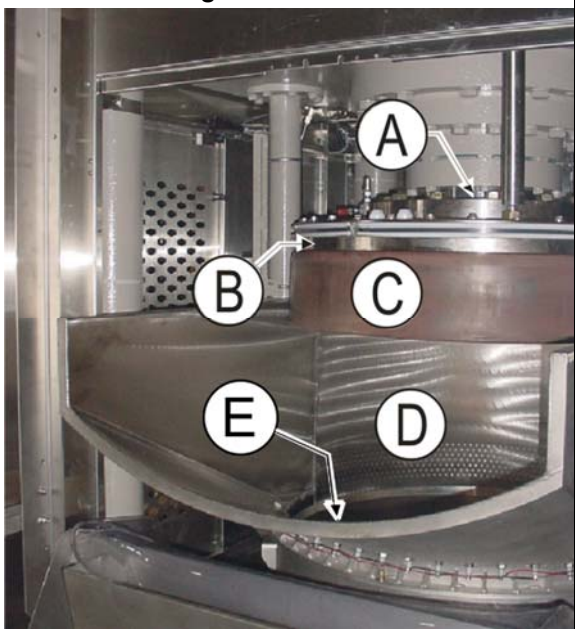	**A.** Ram—large hydraulic cylinder that provides the pressing force. **B.** Platen—round plate attached to the ram cylinder rod. **C.** Diaphragm—flexible, water-filled rubber membrane attached to the platen. In this view, the ram, platen and diaphragm are in the up position. **D.** Receiving chute and can—a metal assembly that moves down and up hydraulically (shown in the down position) and is used to guide the incoming wet goods into the press and shape the cake. **(E).** Not seen are the press bed on which the cake is formed and integral conveyor, which moves the cake out of the press once the can and ram are raised out of the way.

3.1.1. The Pumps and Related Components

The machine uses two hydraulic pumps: a recirculation pump and a pressure pump. The recirculation pump is part of the oil cooling and filtering system. Pressure for can and ram operation is provided by the pressure pump. The pressure pump and its related control components are shown in Figure 36 and include:

variable displacement piston pump (see Notice **45** **)**—a hydraulic pump with multiple pumping pistons whose displacement (stroke), and consequently, output, vary with the back pressure applied to a control port on the pump. This back pressure is determined by the valve position of the external proportional valve.

proportional valve—an electrically operated, modulating hydraulic valve used to vary the oil pressure in a small hydraulic line in proportion to a varying voltage. The voltage read by this valve is produced by a microprocessor controller peripheral board called a DBET card.

DBET card—an electronic circuit board that interprets data from the machine's microprocessor controller (through a D/A peripheral board) to produce a variable voltage. The microprocessor controller uses a pressure transducer to monitor actual hydraulic pressure.

pressure transducer—a sensing device that produces variable voltage in proportion to pressure. This voltage is converted to digital data that the controller interprets as a pressure value.

Notice 45: Pressure pump should not be field-repaired—Because of its complexity, service personnel are advised not to attempt internal repairs to the pressure pump. Take the pump to an authorized service center for your brand of pump (Kawasaki or Rexroth).

Figure 36: Pressure Pump and Related Control Components

Components on Top of Press

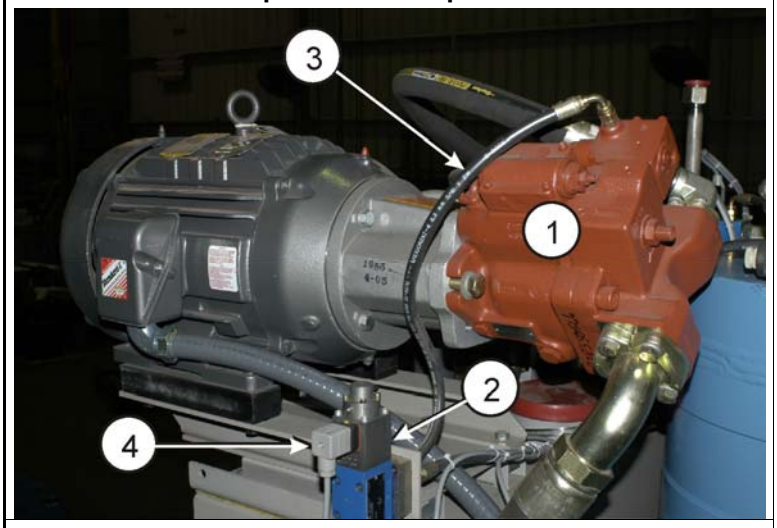

Legend

1. Pressure pump (variable displacement piston pump)
2. Proportional valve
3. Hydraulic line from proportional valve to pump control port
4. Electrical feed from DBET card

DBET Card in Control Box

3.1.2. The Hydraulic System and How It Functions During Operation

The single stage press hydraulic schematic is shown in Figure 37. Following the schematic are descriptions of the various parts of the operating cycle and what the hydraulic system does during each part. Items referenced in the explanations are those shown on the schematic.

Figure 37: Single Stage Press Hydraulic Schematic

Schematic

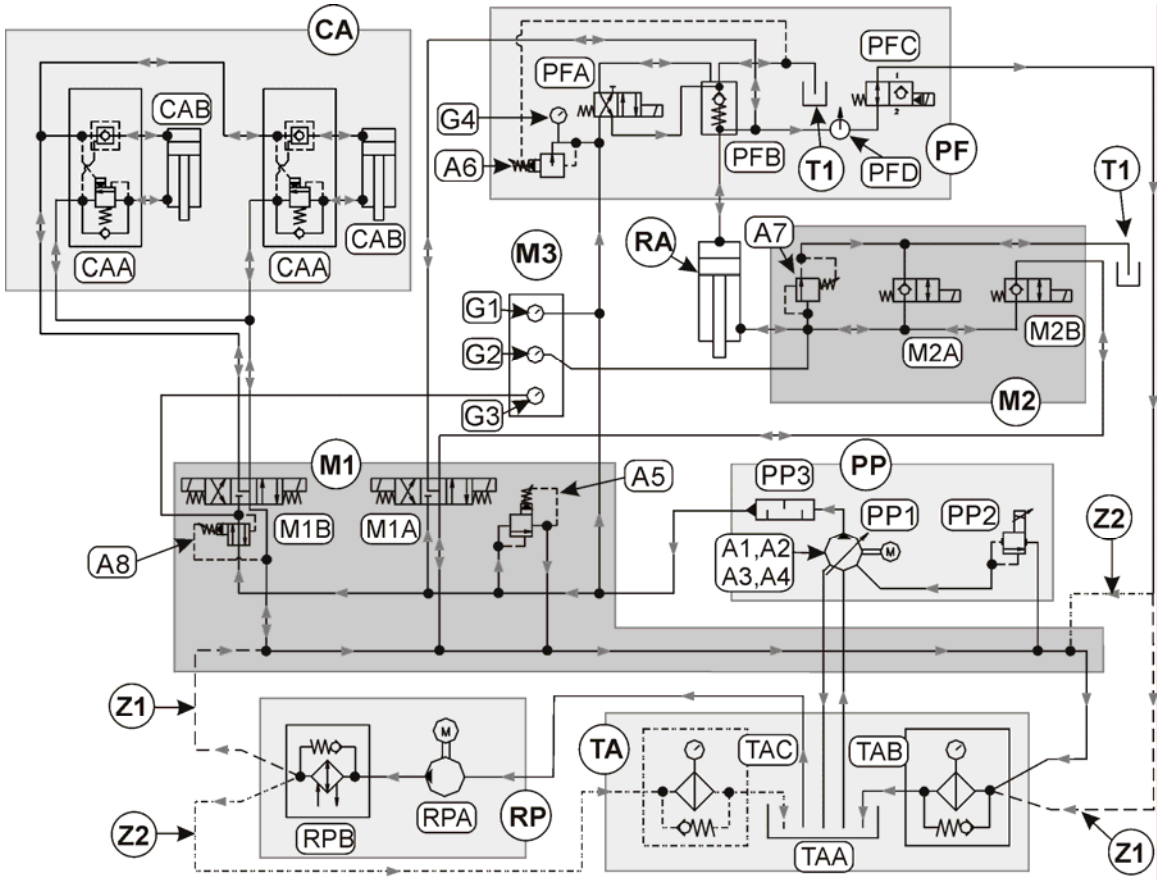

Legend

CA. Can hydraulics below top plate: counter-balance valves (CAA) and can cylinders (CAB)—See BMP980017 "Counterbalance Valves and Fittings" and BMP010009 "Receiving Chute and Can" for parts information.

M1. Manifold with ram directional valve (M1A), can directional valve (M1B), system relief valve (A5) and can pressure regulator (A8)—See BMP010006 "Main Press Manifold" for parts information.

M2. Manifold with poppet valves 1 (M2A) and 2 (M2B) and ram relief valve (A7)—See BMP010006 "Main Manifold."

M3. Gauge cluster with system pressure gauge (G1), ram pressure gauge (G2) and can pressure gauge (G3).

PF. Pre-fill pilot valve (PFA), pre-fill valve (PFB), bypass valve (PFC), pre-fill pressure regulator (A6) and pre-fill pressure gauge (G4)—See BMP010004 "Pre-fill Valve Fittings" for parts information.

PP. Pressure pump (PP1), proportional valve (PP2), optional suppressor (PP3) and pump adjustments, including idle pressure (A1), compensator (A2), stage 1 horsepower (A3) and stage 2 horsepower (A4)—See BMP010003 "Hydraulic Main Pump Assembly" and BMP010001 "Proportional Valve" for parts information.

RP. Recirculation pump (RPA) and oil cooler (RPB)—See BMP010008 "Oil Recirculation Cooler and Fittings."

RA. Hydraulic ram—See BMP010011 "Hydraulic Ram and Diaphragm" for parts information.

TA. Tank (TAA) and filter (TAB). Additional filter–MP1Axxxx models only (TAC)—See BMP010005 "Hydraulic Tank Assembly." for parts information.

T1. To tank (not through filter)

Z1. This piping applies to models with prefix MP16 only.

Z2. This piping applies to models with prefix MP1A only

While the machine is running (idling and operating), the recirculation pump (RPA) and oil cooler (RPB) run to keep the hydraulic oil cool and filtered. The path that oil takes when recirculating

varies with model type (MP16xxxx (Z1) or MP1Axxxx (Z2)). This, and the extra oil filter (TAC) used by MP1Axxxx models, are the only schematic differences between these models.

3.1.2.1. Idling (waiting to load)—While the press, with power on, is waiting for a load, it remains at idle pressure (minimum system pressure) with these conditions in effect:

- The pressure pump (PP1) runs, providing approximately 400 psi (28 bar) pressure (idle pressure) as controlled by the idle pressure adjustment (A1—see caution statement **46**). The small volume of oil flowing from the pump returns directly to the tank (TAA) via the pump's case drain (see Note 7).
- The ram is up (confirmed by the ram full up proximity switch— Figure 38).
- The can rests on the press bed (confirmed by the can at bottom proximity switches— Figure 38), but the can cylinders are not pressurized.
- The can directional valve (M1B) is centered, so no oil flows to the can cylinders, but the ram directional valve (M1A) is spooled to the raise ram position so that idle pressure will help hold the ram up.

Note 7: The pressure pump has two oil lines to the tank—a large suction line and a small case drain return.

CAUTION 46: Risk of machine malfunctions and damage—The various pressure adjustments (items with prefix “A” in the hydraulic schematic) are set at the Milnor factory. Indiscriminate changes to these settings will likely result in impaired performance, malfunctions and/or damage and can void the warranty.

- Do not attempt to change hydraulic pressure settings except in strict compliance with document BIPPMT02 “Setting Single Stage Press Pressures.”

Figure 38: Ram and Can Proximity Switches

Ram Proximity Switches

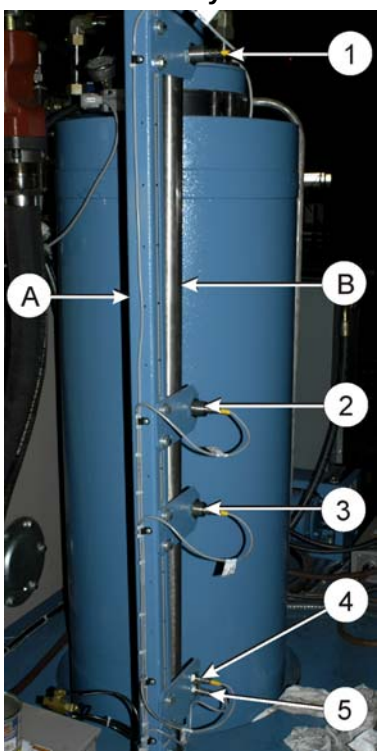

Can Proximity Switches

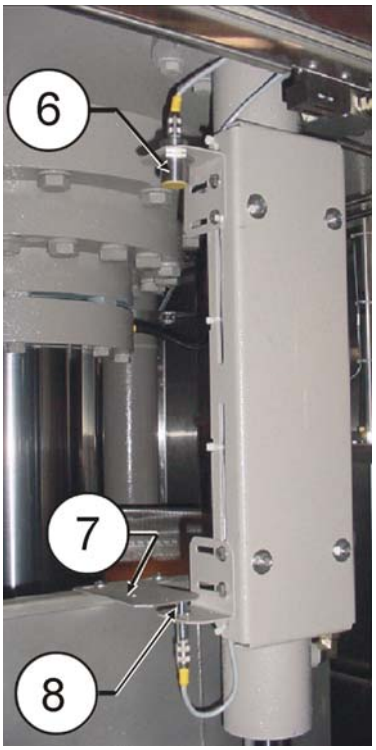

Legend

A. Proximity switch mounting post
B. Ram guide rod (serves as switch target)
1. PXST “Ram full up”
2. PXSM “Ram inside can”
3. PXSU “Ram at unload”
4. BXSL “Ram at low”
5. PXSB “Ram full down”
6. PXCT “Can at top”
7. Proximity switch target
8. One of two switches: PXCB1 and PXCB2 “Can at bottom”

3.1.2.2. **Loading**—The empty press is ready to receive a load when the ram is fully up and the can is fully down, as in Figure 35. During loading, a batch of goods discharged from the washer slides down the receiving chute and into the can. Now, and throughout processing, the can must be held firmly against the bed to prevent the load from causing the can to shift. This occurs as follows:

- The proportional valve opens the amount specified by the *can valve setting* configure decision to produce about 800 psi (55 bar) on the pump side of the directional valves.
- The can directional valve (M1B) spools to the can down position (coil B energized), providing oil to the can cylinders (cap end) and **remains in this position throughout loading and pressing.** As pressure on the pump side of the proportional valves rises during pressing, pressure not exceeding 800 psi is maintained in the can down hydraulic circuit by the can pressure regulator (A8—see caution statement **46**). The regulator valve, along with a check valve within each can counterbalance valve assembly (CAA), also prevents oil pressure within the can cylinders from escaping back through the can down circuit.

3.1.2.3. **Ram "Free-fall"**—Following the configured *loading time* delay, the ram descends by gravity, lowering the diaphragm into the can (see Note 9). The following conditions permit this:

- The ram directional valve (M1A) spools to the ram down position (coil B energized), permitting oil to flow into the ram cylinder (cap end). Although this does not account for the majority of oil filling the cylinder, some oil is pumped in at this time.
- The pre-fill pilot valve (PFA and Figure 39) energizes (valve opens) providing oil pressure to the pre-fill valve actuator. This opens the pre-fill valve (PFB), if it was not already pulled open by suction. The falling ram draws a large volume of oil directly from the tank into the cylinder by suction, through the pre-fill piping and pre-fill valve (see Figure 39).
- Both electrically operated poppet valves (M2A and M2B—see Note 8) energize, permitting oil pushed from the rod end of the ram to quickly return to the tank. Poppet valve #2 (M2B) returns oil through the ram directional valve while valve #1 (M2A) goes directly to the tank.
- The normally open bypass valve (PFC) remains open, acting as a pressure regulator to prevent ram pressure from exceeding about 200 psi (14 bar) during most of the ram's descent. This protects against the rare instance when the diaphragm meets with resistance before it is fully contained by the can (usually the result of an accidental double load).

Note 8: The poppet valves have two positions: When de-energized, the valve permits oil to flow into, but not from the ram cylinder rod end. When the valve is energized, oil can flow in either direction.

Note 9: For proper "free-fall", a set of ram cylinder seals must be maintained at the correct tightness, as explained in BIPPMM13 "Adjusting Ram Shaft Seal Tightness."

Figure 39: Pre-fill Pilot Valve and Pre-fill Valve

Pre-fill Pilot Valve	Pre-fill Valve (pre-fill piping removed)	Legend
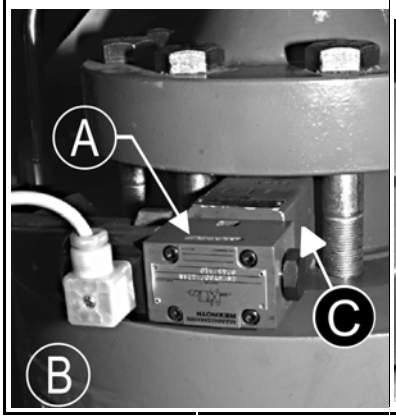	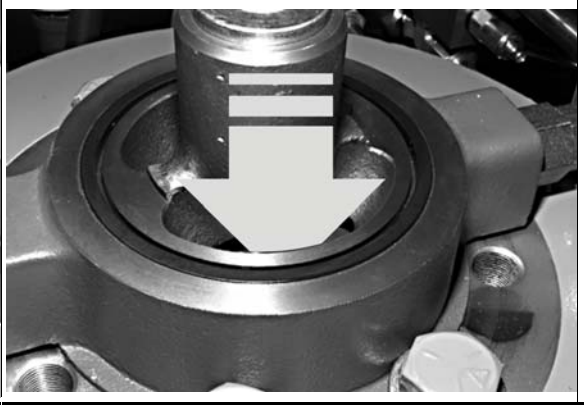	**A.** Pre-fill pilot valve **B.** Ram **C.** Pre-fill valve

3.1.2.4. Preparing to press (pre-fill valve closed, bypass valve permitted to close)—The pre-fill valve and bypass valve must both close, as follows, to permit additional pressure:

- When the diaphragm descends below the ram inside can proximity switch (see Figure 38 and Note 10), this causes the pre-fill **pilot** valve to close. However, the pre-fill valve is held open by the flow of oil through it, so it does not necessarily close immediately.
- The pre-fill valve closes when the ram meets resistance from the goods and the flow of oil into the cylinder slows sufficiently.
- When the diaphragm descends past the ram at unload proximity switch (see Note 10), the bypass valve is permitted to close. As long as the diaphragm is below ram at unload, this valve will close when pressing pressure is commanded and open when pressure is released.

Note 10: If the descending ram is jammed by goods that did not slide completely into the can, the ram inside can proximity switch will not make, and the pre-fill valve will remain open. This protects against further damage by venting pressure to the tank.

3.1.2.5. Processing (extracting)—All of the hydraulic valves that enable high pressure in the ram function according to the press code (see definition at the front of this document and Note 11 below) and the pressure transducer that provides actual pressure data to the microprocessor. These valves include the proportional valve (PP2), ram directional valve (M1A), bypass valve (PFC), and poppet valves (M2A and M2B).

Note 11: If the *Check for ram at low position?* configure decision is affirmed and the ram descends to the ram at low proximity switch (see Figure 38), the pressure specified in the *Max bar at ram low position* configure decision overrides that specified by the press code. If the current press code is not an "empty load" and the ram descends to the ram full down switch (see Figure 38), pressure ceases and an error occurs.

Maximum system pressure, which varies with model, is limited by the pump compensation pressure adjustment (A2), the system relief valve (A5) and other factors (see caution statement **46**). As the ram pressurizes, the diaphragm must distribute the pressure by conforming to the shape of the goods. During processing, the following conditions exist:

- The pre-fill valve remains closed.
- The can down circuit remains pressurized, holding the can against the bed.

3.1.2.6. Discharging—During discharge, both the can and the ram eventually rise to fully up (as confirmed by the can at top and ram full up proximity switches (see Figure 38). How they move depends on which of two end codes is programmed for the current press code: One end code moves the can and ram more forcefully to dislodge the cake; the other moves them more gently to preserve the cake shape, as appropriate for goods type (see reference manual for more on end codes). The following functions occur at various times, depending on end code:

- The bypass valve, which opened when pressing ceased, remains open, ensuring minimum pressure in the ram cylinder (cap end).
- The ram directional valve (M1A) spools to the ram up position (coil A energized), permitting oil to flow through the check valve of de-energized poppet valve #2 (M2B) and into the rod end of the ram cylinder.
- The pre-fill pilot valve (PFA) energizes (valve opens), providing oil pressure to the pre-fill valve actuator and opening the pre-fill valve (PFB). This allows a large volume of oil to flow quickly from the ram through the pre-fill valve and piping, directly to the tank. When this occurs depends on the end code.
- The can directional valve spools to the can up position (coil A energized) permitting oil to flow through the counterbalance valves and into the rod end of the can cylinders (see Supplement 2). Depending on end code, the ram will rise slowly to fully up, or rise quickly to the ram at unload proximity switch position.

- The pressure pump and proportional valve function to pressurize the rod end of the ram (ram up circuit) to a pressure not exceeding 1500 psi (103 bar), as limited by the ram relief valve (A7—see caution statement **46**) and the rod end of the can cylinders (can up circuit) to a pressure not exceeding 800 psi (55 bar), as limited by the can pressure regulator (A8).

Once the can is fully up and the ram is either fully up or at least at the unload position (depending on end code), the cake is discharged in the following sequence:

1. The discharge door opens.
2. The belt runs forward until the discharge end photo eye is blocked and cleared, plus the greater of either two seconds or the configured *belt run time after discharge* value.
3. The discharge door closes.
4. The can is lowered to the bed.

The press is ready for the next load when the can is fully down and the ram is fully up.

Supplement 2

How the Can Assembly is Susceptible to Damage

The can is susceptible to damage primarily from three conditions: 1) some part of the load chute and can assembly meets an obstruction, 2) the diaphragm is manually lowered through the raised can, 3) the can cylinders are not functioning in unison.

The first condition typically results when goods become jammed between the can and ram or between the can and press bed. The machine provides two forms of protection for this:

- If the microprocessor sees more than a three second delay between the two can at bottom proximity switch inputs, it will stop the machine and issue an error.
- The bushings that connect the load chute and can assembly to the can cylinder rods are designed to slip on the rod in the event of a severe jam. Should this occur, the bushings must be re-seated and the bolts properly torqued, as explained in document BIPPMM09 “Servicing a Misaligned (“Jammed”) Can Assembly.”

The second condition, which can also damage the diaphragm, applies to manual operation and is addressed by the following precaution for operators and service technicians.

Notice 47: Risk of Damage and Misalignment—Moving the ram through the bottom of the can will cause the diaphragm to forcefully rub against the can, possibly causing damage. This does not occur in automatic operation.

- If the maintenance work necessitates placing the can up and the ram down: 1) lower the can onto the press bed, 2) lower the diaphragm onto the press bed, 3) raise the can.
- If goods become jammed between the ram and can, withdraw the ram through the **top** of the can. Attempting to push the ram through the bottom will only jam the goods tighter.

If can misalignment does occur, the corrective action is the same as for condition 1, above.

The counterbalance valves (CAA) address the third condition. These valves are intended to ensure that the can remains level as it travels. They are adjusted at the factory and do not normally need subsequent adjustment. However, if the can appears to travel in a jerky, or uneven motion, and can misalignment, as explained above is ruled out, these valves may need adjustment. Contact Milnor Technical Support.

— End of BIPPMF01 —

BIUUUT04 (Published) Book specs- Dates: 20101202 / 20101202 / 20101202 Lang: ENG01 Applic: PPM

3.2. Onboard Troubleshooting Aids for Digital Outputs and Inputs

Milnor machines with Mark V microprocessor controllers and 2-line displays provide visual aids such as those shown in Figure 40, for troubleshooting digital (on/off) output and input circuits. Milnor machines with other types of controllers and displays provide similar features. These aids indicate the current on/off state at various locations in the circuit.

Figure 40: Troubleshooting Aids

On/Off State Indicators

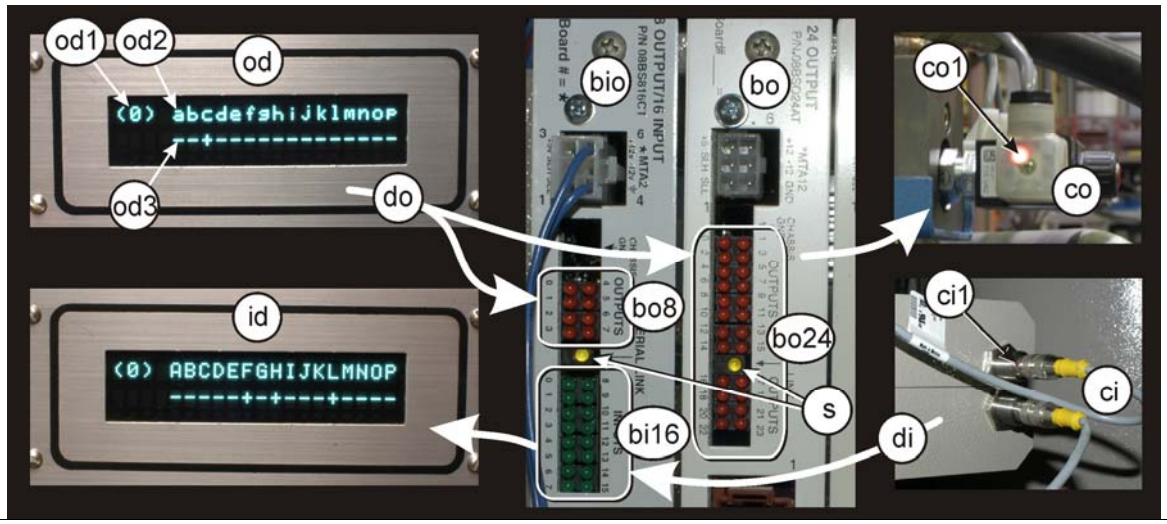

Legend

bio. Input/output board. These are designated BIO-1, BIO-2, etc., for the first, second, etc. I/O board on the machine.
bi16. Sixteen (16) green LED's (zero (0) through 15)–one per input. LED illuminates when input is made.
bo. Output board. These are designated BO24-1, BO24-2, etc., for the first, second, etc. output board on the machine.
bo8. Eight (8) red LED's (zero (0) through 7)–one per output. LED illuminates when output relay is energized.
bo24. Twenty four (24) red LED's–one per output on this board. The outputs are numbered zero (0) through 23.
ci. Electrical components that provide input signals (proximity switches shown).
ci1. LED on proximity switch–illuminates while switch contacts are made. Only certain components provide an LED.
co. Electrical component controlled by an output signal (electrically operated valve shown).
co1. LED on electric valve actuator–illuminates while valve is actuated. Only certain components provide an LED.
di. Direction of input signals.
do. Direction of output signals
id. Input display on controller–shows 16 inputs (identified with upper case letters A through P)
od. Output display on controller–shows 16 outputs (identified with lower case letters a through p)
od1. Display page number. Additional outputs will be on page 1, 2, etc.
od2. Output “a” (on this page)
od3. Output “a” on/off value. A dash (-) means not actuated. A plus sign (+) means actuated.
s. Yellow serial link light–Must blink when machine is on. Otherwise, board is not communicating with processor.

3.2.1. How To Use the Troubleshooting Aids

Use these aids as a quick check of circuit function and integrity. **Observing proper safety precautions** (see safety manual) you can monitor outputs and inputs while the machine is operating or test outputs in *Manual* mode. Observe circuit function at the following locations:

3.2.1.1. **Microprocessor Display**—See the reference manual for instructions on viewing inputs and outputs, and on testing. When you invoke this capability, data similar to that shown on the left side of Figure 40 will appear on the display. Confirm that an output occurs at the expected time. Confirm that an input signal from a component on the machine reaches the controller (e.g., test for an open) or that an input is not seen at the wrong time (e.g., test for a short).

3.2.1.2. **IO Boards**—The boards (center of Figure 40) are typically located in the machine's low-voltage control cabinet. The machine will have whatever combination of boards is needed to handle all digital outputs and inputs. Tags inside the cabinet door identify each board and the circuit functions assigned to the numbered outputs and inputs (numbers printed next to the LED's) on each board. Confirm that an output signal from the controller actuates the output relay on the board. Confirm that an input signal from a component on the machine reaches the board or that an input is not seen at the wrong time.

Supplement 3

About the Yellow Light and Serial Communication

This light tells much about the status of serial communication and the related hardware. Consider three possible conditions: 1) the light blinks, 2) the light remains off, or 3) the light is steady on.

blinks—serial data is passing between this board and its central processor. This board is probably good. However, this condition says nothing about the quality of the serial data. It does not ensure that the data is uncorrupted by, for example, electromagnetic interference (EMI).

steady off—the board has lost serial communication with the processor. If the machine contains at least two boards of this type, make a note of the board addresses, as set on the rotary switches on the boards. Then swap the boards and give each board the address of the board it replaces. If the light that was not blinking is still not blinking (if the problem moved with the board), the board is bad. If the light on the board that now occupies the problem position is not blinking, it is likely that there is an open in the serial link wiring.

steady on—this board is bad **and** the board is interfereing with serial communication throughout the serial link. Replace the board.

3.2.1.3. **Electrical Components**—As shown on the right side of Figure 40, electrical components that provide input signals to the microprocessor, such as proximity switches, may have an LED on the component to indicate it's on/off state. Verify that components are functioning. Similarly, components controlled by digital outputs, such as electrically operated valves, may have an LED to indicate whether the component is energized. Verify that an output signal from the controller reaches the component.

3.2.2. Caveats

These troubleshooting aids have the following characteristics and limitations:

- You cannot determine the position of an output or input on an I/O board from its position on the controller display, or the reverse. Nor do these positions correlate to circuit connector and pin numbers, wire numbers, etc. Ensure that you know which display page/position and board/LED the circuit to be checked corresponds to, as follows:

  Display page and position—Tables in the reference manual (usually under troubleshooting) list outputs and inputs and their positions on these displays.

  Board location in card cage—This is shown on a tag inside electric box door (tag also shown in schematic manual).

Position on board—This is shown on a tag inside electric box door (tag also shown in schematic manual).

Circuit description—Circuit logic, connector and pin numbers, wire numbers, etc. are provided in the schematic manual.

- Some input circuits connect to the controller directly on the processor board (direct inputs). Currently processor boards do not provide LED's for these inputs. If you cannot find an input listed on the electric box tag that identifies the I/O board positions, suspect that this is a direct input. Verify this on the electric schematic for this circuit. Any such input will connect to the processor board via a connector designated 1MTA38 or 1MTA39.
- The troubleshooting aids do not fully replace traditional electrical troubleshooting. For example, if you suspect there is a problem with a proximity switch, you can quickly deduce from the LED's that there is an open in the wiring between the switch and the I/O board. However, you will need to use traditional means to pinpoint the break. “Milnor's Guide to Basic Troubleshooting” (MXUUUU01) provides guidance on using test equipment.

— End of BIUUUT04 —

BIPPMM21 (Published) Book specs- Dates: 20101202 / 20101202 / 20101202 Lang: ENG01 Applic: PPM

3.3. About the Ram Proximity Switches, the Switch Post, and the Switch Operation Rod

This document uses Simplified Technical English.
Learn more at http://www.asd-ste100.org.

NOTICE P1: "Remove power from the machine" means use the necessary safety procedure for your location. In the USA, this is the OSHA lockout/tagout (LOTO) procedure. More local requirements can also apply.

Notice 49: This document applies to Milnor® 1-station press models made after August, 2009. It also applies to machines made before this date that have a ratchet mechanism installed. This mechanism turns the diaphragm. For machines with no ratchet mechanism, see document BIPPMM02 “About the Ram Proximity Switches, Mounting Post, and Guide Rod.”

Notice 50: The diaphragm must be correctly filled before you do this procedure. Refer to the document that applies to your machine: BIPPMM10 “How to Fill and Maintain the Diaphragm” or BIPPMM17 “The Installation and Replacement of the Diaphragm and Gum Rubber for the 1-Station Membrane Press.”

WARNING 51: Risk of death or serious injury—The container and ram move independently. During operation these components move without warning. These components can also move down with power off. Spaces can close and cut off your arm.

- Keep personnel not necessary for this maintenance clear of the machine.
- Use special caution when you use the key that bypasses the door guards for maintenance.
- Two qualified technicians are necessary. Each technician must hear the other's voice clearly.

You must examine and adjust the ram proximity switches when you install the machine or replace related components, or if the ram does not move correctly. Two technicians are necessary for switch adjustment. One technician operates the press controls in the *Manual* mode (manual operation) as told in the reference manual. The other examines and adjusts the switch positions. The two technicians must know and obey the safety requirements for this machine.

diaphragm (membrane)—the rubber component that pushes on the goods during operation

container (can)—the cylinder that the goods, the diaphragm, and the platen go into during operation

switch operation rod (guide rod)—a vertical rod that moves up and down with the movement of the ram. On 1-station presses made after August, 2009, this component is the target for four ram proximity switches, but is not attached to the platen. On machines made before this date, this component is the target for all five ram proximity switches. On these machines, the platen and diaphragm cannot turn because the rod is attached to the platen.

Look at Figure 41. Four of the five ram proximity switches are attached to the switch post above the top plate near the switch operation rod. One switch is attached to the ratchet assembly below the top plate. You install the switch post and the switch operation rod as a part of machine installation. Each ram proximity switch has a name related to its function (example: PXST). This name identifies this component on related electrical schematics.

Figure 41: Ram Proximity Switches, Related Components, and Switch Functions

Switch Post with PXSM, PXSU, PXSL, PXSB

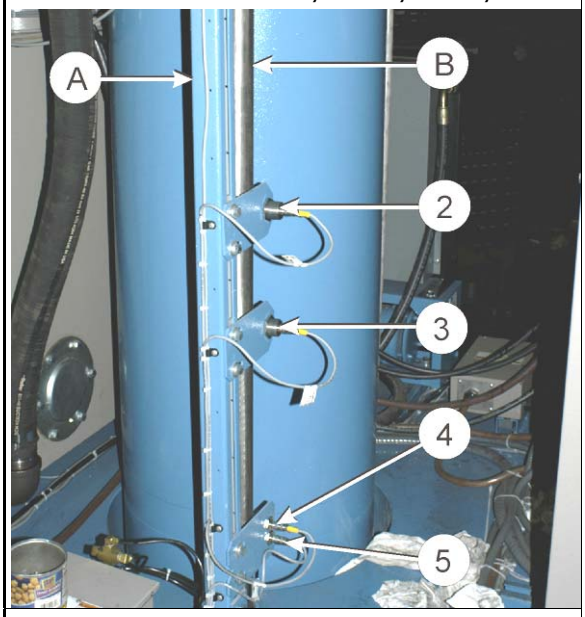

Ratchet Assembly with PXST

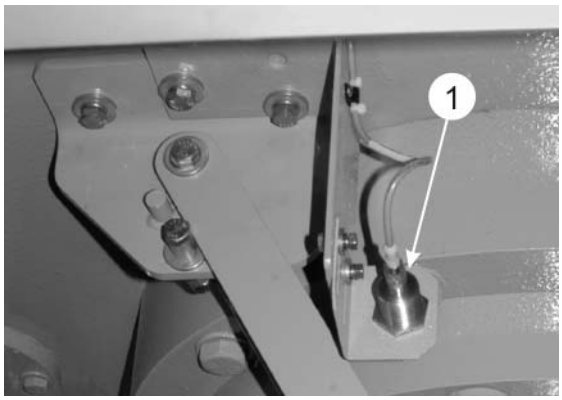

Legend

A. Switch post
B. Switch operation rod
1. PXST "The ram is up fully"—The ram is approximately at its upper mechanical limit of travel.
2. PXSM "The ram is in the container"—This is when the diaphragm is in the descent by gravity and starts to go into the full circle of the receive chute.
3. PXSU "The ram is at the discharge position"
  a. For pressing—The diaphragm parks in the full circle of the container. Here, the ram starts to apply pressure to the goods.
  b. For discharge—The cake has clearance, but if the cake bonds to the container, the ram will push the cake out when the container goes up.
4. PXSL "The ram is low"—The ram moved down more than it could if the container had a full load of goods. The controller decreases pressure, which is correct for a small load.
5. PXSB "The ram is down fully"—The diaphragm is approximately one inch above the bed. This is as low as the ram can go in automatic operation without a risk of component damage.

3.3.1. Install the switch operation rod and the switch post, if necessary

Do this work with electrical power removed (see Notice P1).

Refer to Figure 42. The switch operation rod goes through a hole in the press top plate. Plastic guide plates are attached to the top and bottom of this hole. When you move the rod, make sure that you hold it tightly and that the surface does not become damaged. From above the press top plate, put the end of the rod with the plastic base through the hole. Let it go down slowly until the base is on the ratchet turn plate (which is attached to the platen). During operation, the plastic base will move across the ratchet turn plate while the diaphragm turns.

Put the switch post in its bracket on the top plate as shown in Figure 42. Tighten the post in the bracket.

Figure 42: Installation of the Switch Operation Rod and Switch Mounting Post

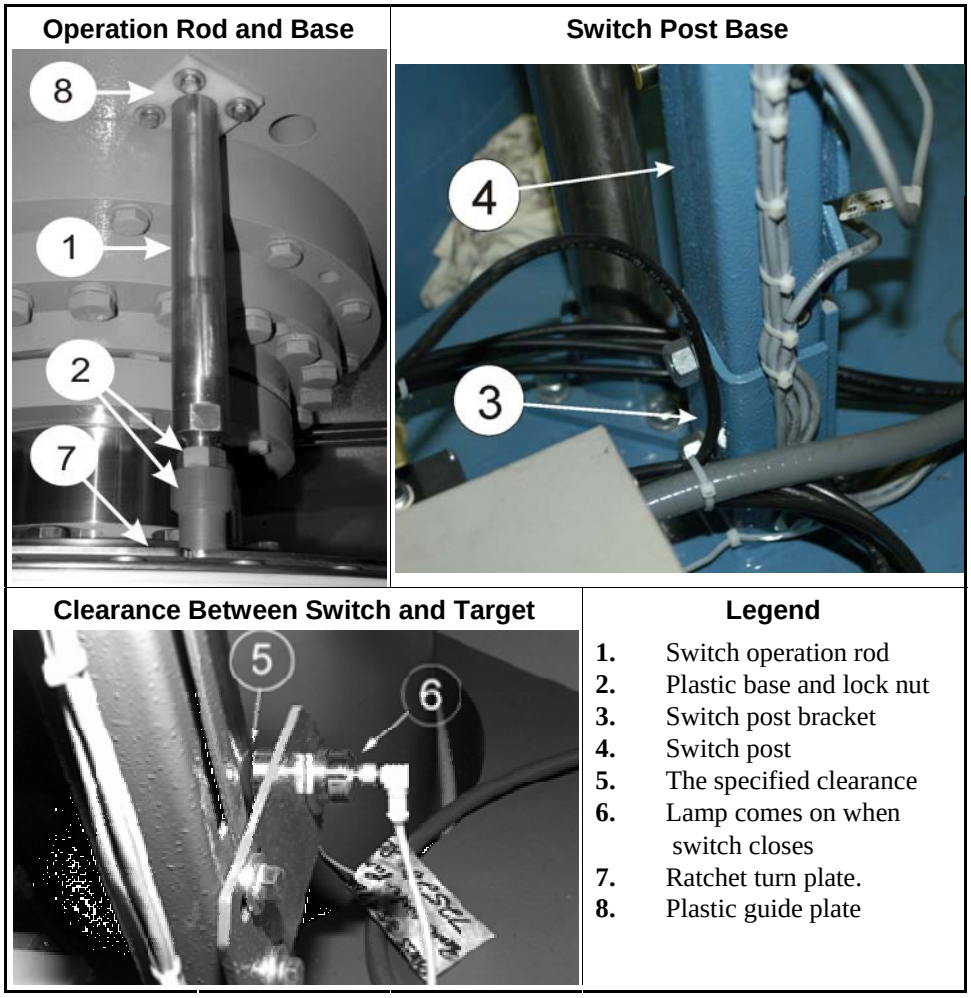

3.3.2. Examine the clearance between each switch and its target

Do this work with electrical power removed (see Notice P1).

The target for the switches on the switch post is the operation rod. The target for PXST is the ratchet arm. Make sure that each of the four switches on the switch post horizontally aligns with the switch operation rod. Examine the clearance between each switch and its target (Figure 42, Item 5). Adjust if necessary. The clearance must be approximately:

PXST, PXSM, and PXSU (large switches) = 0.2" (5 mm)
PXSL and PXSB (small switches) = 0.13" (3 mm)

3.3.3. Examine each switch vertical position

You start each of the switch adjustments with electrical power on. You do some steps with electrical power off, as told in the instructions.

Slots on the switch bracket or on the component it attaches to let you vertically adjust the position of each proximity switch. The press must have a properly filled diaphragm before you examine and adjust the vertical position of the proximity switches (see Notice 50).

3.3.3.1. PXST "The ram is up fully" —This switch is on the ratchet assembly below the top plate (see Figure 41). This is the only ram proximity switch that operates in the *Manual* mode. The switch must close immediately before the ram touches the top mechanical limit of travel.

The container must stay down during this procedure. Use special caution because one technician will be in the path of container movement while the other operates the controls.

1. Move the PSXT switch bracket as high as it will go and tighten the bracket with your hand.
2. The PXST lamp will be off. One technician operates the controls to hold the ram against the top mechanical stop. While this occurs, the other technician slowly moves the switch down until the switch circuit closes (lamp on). Tighten the switch bracket with your hand.
3. **Remove power from the machine (see Notice P1).**
4. Tighten the switch bracket with tools.

3.3.3.2. PXSM "The ram is in the container" and PXSU "The ram is at the discharge position"—These switches are on the switch post. The adjustment procedures are almost the same for each. Start with the container down and the ram up. To adjust PXSM:

1. The PXSM lamp will be on. One technician looks at PXSM and tells the other technician to stop when the switch circuit opens (lamp off). The other technician slowly moves the ram down and stops ram movement when told.
2. Examine the diaphragm position. If the bottom edge of the diaphragm is immediately in the full circle of the receive chute, (Figure 43), the switch position is correct. If not:
   a. Move the ram to the position shown in Figure 43.
   b. Move the switch up on the post. The switch lamp will be on.
   c. Slowly lower the switch until the switch lamp goes off.
   d. Tighten the switch bracket with tools.

Figure 43: Diaphragm is Safely in Container (PXSM)

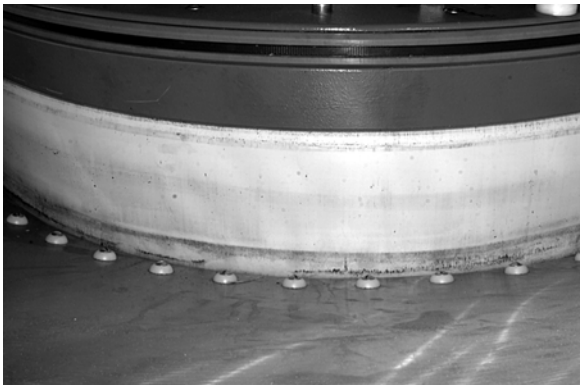

Figure 44: Where to Park the Ram (PXSU)

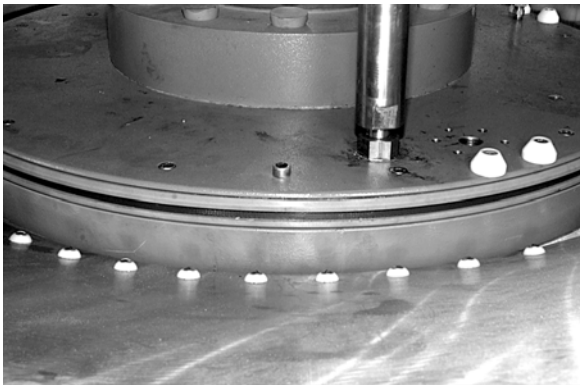

Examine the PXSU switch. This switch must stop ram movement when the diaphragm is in the position shown in Figure 44. Use the same general procedure that you used to adjust PXSM.

3.3.3.3. PXSL "The ram is low" and PXSB "The ram is down fully"—These switches are on the switch post. Adjust switch PXSB first then put PXSL immediately above PXSB (switch brackets touch as shown in Figure 45).

CAUTION 52: Risk of diaphragm damage and unsatisfactory extraction—If the PXSB position is too low, this can decrease diaphragm life. If the PXSB position is too high, this can decrease the extraction. Small loads or an incorrectly filled diaphragm will make these problems worse.

- Do this procedure accurately.
- Fill the diaphragm correctly (see Notice 50).

CAUTION 53: Risk of machine damage—You can bend machine components if you push the expanded diaphragm through the bottom of the container with force.

- The correct sequence to put the ram down and the container up is 1) container down, 2) diaphragm down, 3) container up. The correct sequence to put the container and ram in their usual positions is 1) ram up, 2) container down.

To adjust PXSB:

1. Put the ram down and the container up (see caution statement 53). Install the container safety stands.
2. Move the ram up approximately six inches (150 mm).
3. The PXSB lamp will be on. One technician looks at PXSB and tells the other technician to stop when the switch circuit opens (lamp off). The other technician slowly lowers the ram and stops when told.
4. **Remove power from the machine (see Notice P1).**
5. Measure the clearance between the diaphragm and the bed. If this measures one inch (25 mm) as shown in Figure 46, the switch is adjusted correctly. If not:
   a. Connect electrical power. Put the diaphragm on the press bed.
   b. Move the PXSL switch up approximately six inches (150 mm).
   c. Move the PXSB switch to a position one inch (25 mm) above where the top of the switch operation rod is at this time.
   d. Tighten the switch bracket with your hand.
   e. Do Item 2 through Item 5 again to make sure that this switch position is correct. Adjust the switch position if necessary.
6. When PXSB is in the correct position, tighten the switch bracket with tools.
7. Move the PXSL switch down until the PXSB and PXSL brackets touch, as shown in Figure 45. Tighten with tools.

Figure 45: PXSL and PXSB With Brackets Together

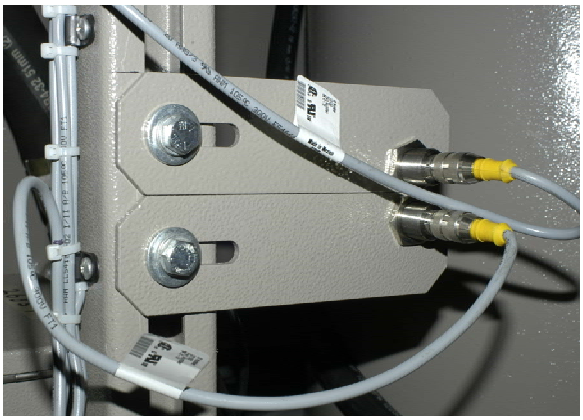

Figure 46: Correct Clearance—PXSB Adjustment

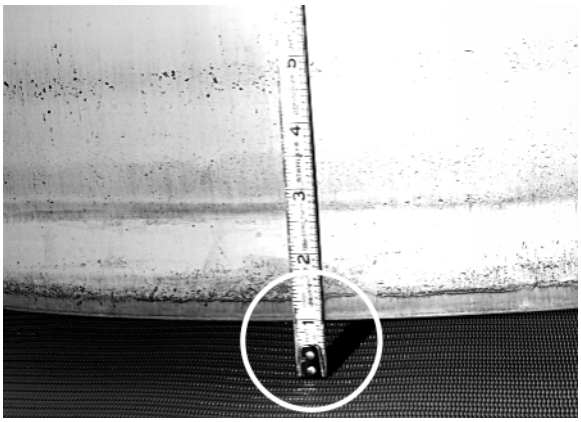

— End of BIPPMM21 —

BIPPMT01 (Published) Book specs- Dates: 20101202 / 20101202 / 20101202 Lang: ENG01 Applic: PPM

3.4. Troubleshooting Ram Malfunctions

This document applies to Milnor® single stage press models with prefixes MP1603, MP1604, MP1A03, and in part, to older MP1601 and MP1602 models. Use this guide if your machine exhibits one of the following symptoms **for no apparent reason** (e.g, the problem cannot be associated with recent servicing):

- Ram will not go down or goes down slowly
- Ram will not go up or goes up slowly
- Ram drifts down at idle
- Neither ram nor can will move
- Little or no extraction
- Commanded pressure not achieved or achieved slowly

Notice 54: Understand the press servicing hazards—Before performing press troubleshooting, review document BIPPMS01 “Safe Servicing...”

3.4.1. What You Should Know Before Troubleshooting

1. These procedures are intended only for qualified service technicians with a knowledge of hydraulic systems. For safety and, in most cases, necessity, two technicians are required.
2. If you are not thoroughly familiar with the press hydraulic system, review document BIPPMF01 “How the Single Stage Press Hydraulic System Works,”.
3. For convenience, kit KYSSTRBLSH is available from Milnor. This provides fittings and other components for use in the test procedures explained in Section 3.4.3 “Functional Tests”.
4. The press has several pressure adjustments which are set at the Milnor factory and not normally readjusted on site. With the few exceptions mentioned herein, pressure adjustments are not a solution when troubleshooting these symptoms. For those few exceptions, comply carefully with document BIPPMT02 “Setting Single Stage Press Pressures.”
5. Often, the first indication of a ram problem will be an error condition and accompanying message such as “E03 Ram Not Fully Raised”. Consult “Troubleshooting” in the reference manual for more information, such as which proximity switch caused the error.

3.4.2. Troubleshooting Procedures

For an overview of symptoms, components and possible causes of ram malfunctions, see Table 6 on the next page. Experienced troubleshooters may wish to use this table as a quick reference. Detailed troubleshooting steps for each symptom follow the table. Some troubleshooting steps require test procedures to be performed. These tests, which are provided in Section 3.4.3, are also helpful for general servicing and preventive maintenance.

Table 6: Ram Symptoms and Causes Cross-reference

Symptom									Possible Cause								
								Pressure not achieved or achieved slowly ⇓	⇓ Stuck valve								
							Little or no extraction ⇓			⇓ Clogged/dirty							
						Neither ram nor can will move ⇓					⇓ Worn/leaking						
					Ram drifts down at idle ⇓							⇓ Open circuit (never on)					
				Ram goes up slowly ⇓									⇓ Short (never off)				
			Ram will not go up ⇓											⇓ Internal damage			
		Ram goes down slowly ⇓													⇓ Mis-adjusted		
	Ram will not go down ⇓															⇓ Bad coil	
Functions and Related Components*																	**Comments**
Pressurize system																	
• Pressure pump						o	o	o						o	o		
• Pressure pump motor						o						o		o			
• System relief valve								o							o		
Control pressure																	
• Proportional valve							o	o	o			o		o			
• Proportional (DBET) card							o	o				o		o	o		
• High resolution D/A board							o	o				o		o			
Sense pressure																	
• Pressure transducer							o	o				o	o	o			
• A/D board							o	o				o		o			
Enable ram rod-side flow																	
• VEPP1 poppet 1 actuator	o	o										o				o	
					o								o				
• Poppet valve 1	o	o	o		o				o	o	o			o			
• VEPP2 poppet 2 actuator	o	o										o				o	
					o								o				
• Poppet valve 2	o	o	o		o				o	o	o			o			
• Ram relief valve			o	o						o	o				o		
Enable ram pressurization																	
• VERDB bypass actuator							o						o				
• Bypass valve							o		o	o	o			o			
• Ram piston seals			o	o	o		o	o			o						
• Ram shaft seals	o	o													o		
Enable ram direction																	
• VERL lower ram (coil B)	o						o					o				o	
			o										o				
• VERR raise ram (coil A)			o		o							o				o	
	o												o				
• Ram directional valve	o		o				o		o					o			
Enable quick fill and exhaust																	
• VERS pre-fill pilot actuator				o			o						o				
• Pre-fill pilot valve		o					o		o					o			
• Pre-fill valve		o		o			o		o					o			

** This column groups related electrical and mechanical components under the function they collectively perform.

3.4.2.1. Ram Will Not Go Down or Goes Down Slowly

—Table 7, referenced in the charts below it, shows the on/off state of the electrically operated hydraulic valves during ram descent.

Table 7: Valve Actuation Sequence for Ram DOWN (observe LED's on actuators)

When During Travel	VERDB "ram down bypass"*	VERS pre-fill	VERL lower ram	VERR raise ram	VEPP1 poppet #1"	VEPP2 poppet #2
1. Start (full up)	off	on	on	off	on	on
2. Ram in can (1/2 down)	off	off	on	off	on	on
3. Ram at unload (2/3 down)	on	off	on	off	on	on
4. End (lowest position)	on	off	on	off	on	on
* The ram down bypass valve is open when VERDB is off and closed when on.						

Chart 1: Ram Will Not Go Down (two technicians required)

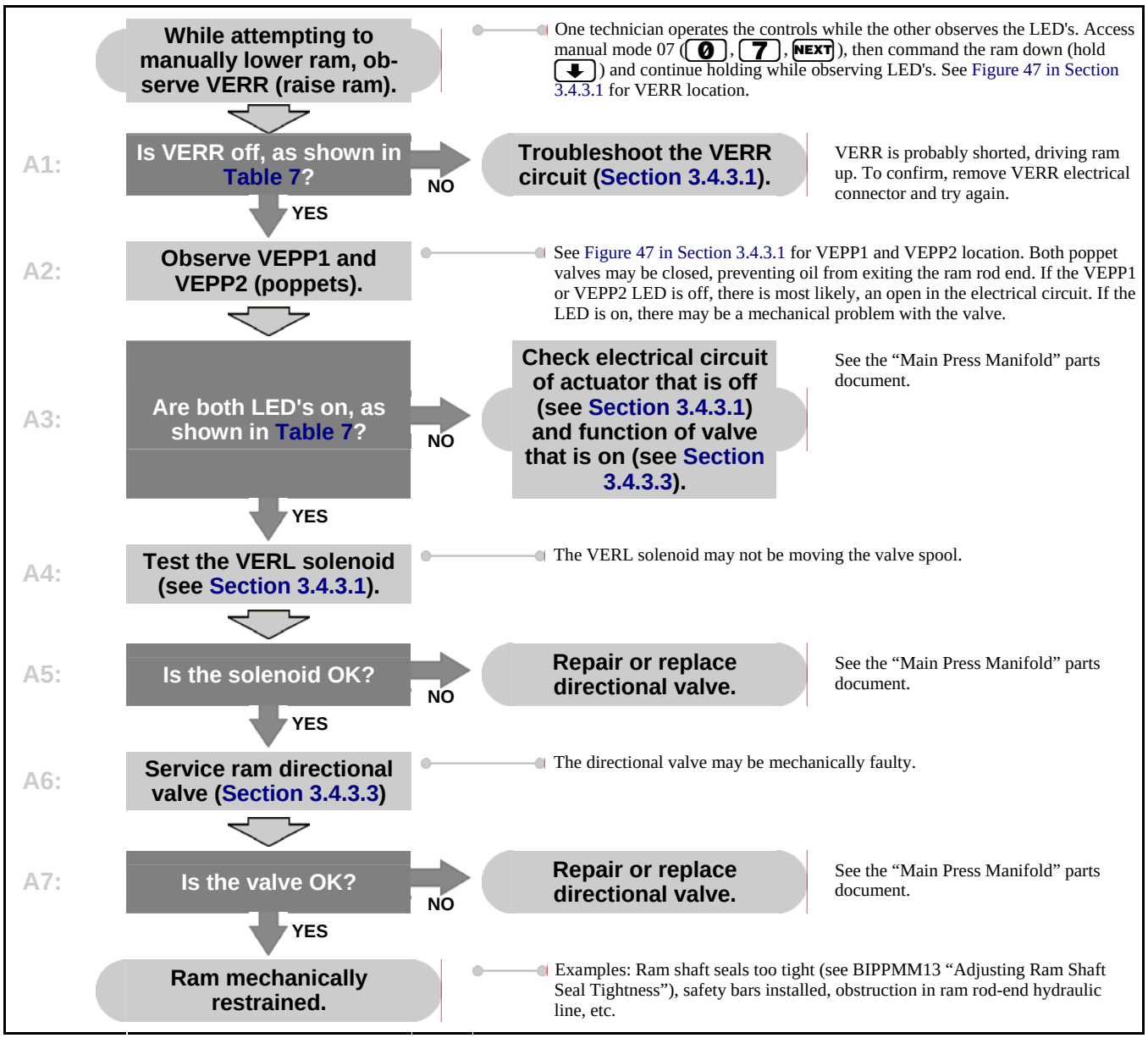

Perform the following troubleshooting if the ram descends significantly slower than it did previously, resulting in longer cycle times.

Chart 2: Ram Goes Down Slowly (two technicians required)

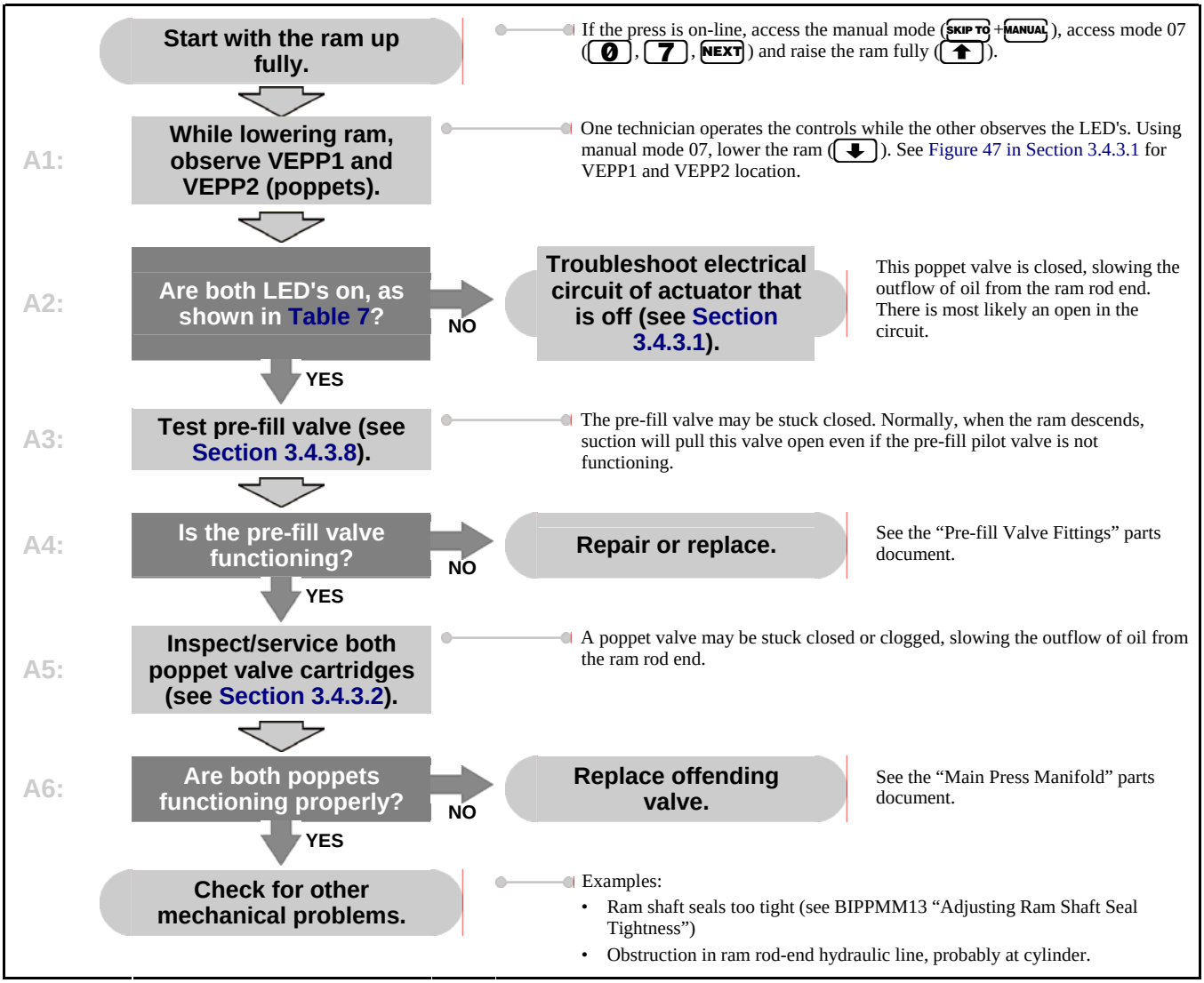

3.4.2.2. Ram Will Not Go Up or Goes Up Slowly—Table 8, referenced in the charts below it, shows the on/off state of the electrically operated hydraulic valves during ram ascent.

Table 8: Valve Actuation Sequence for Ram UP (observe LED's on valve actuators)

When During Travel	VERDB ram down bypass*	VERS pre-fill	VERL lower ram	VERR raise ram	VEPP1 poppet #1***	VEPP2 poppet #2***
1. Start (lowest position)	off	on**	off	on	off	off
2. Ram at unload (1/3 up)	off	on	off	on	off	off
3. End (full up)	off	off	off	off	off	off

* The ram down bypass valve is open when VERDB is off and closed when on.

** When the ram is manually raised, this valve is on at this time. In automatic operation, the timing of valve operation depends on the end code used.

*** Although the poppet valves remain off during ram up, they permit oil to enter the ram rod side because they are always open in this direction.

Chart 3: Ram Will Not Go Up (two technicians required)

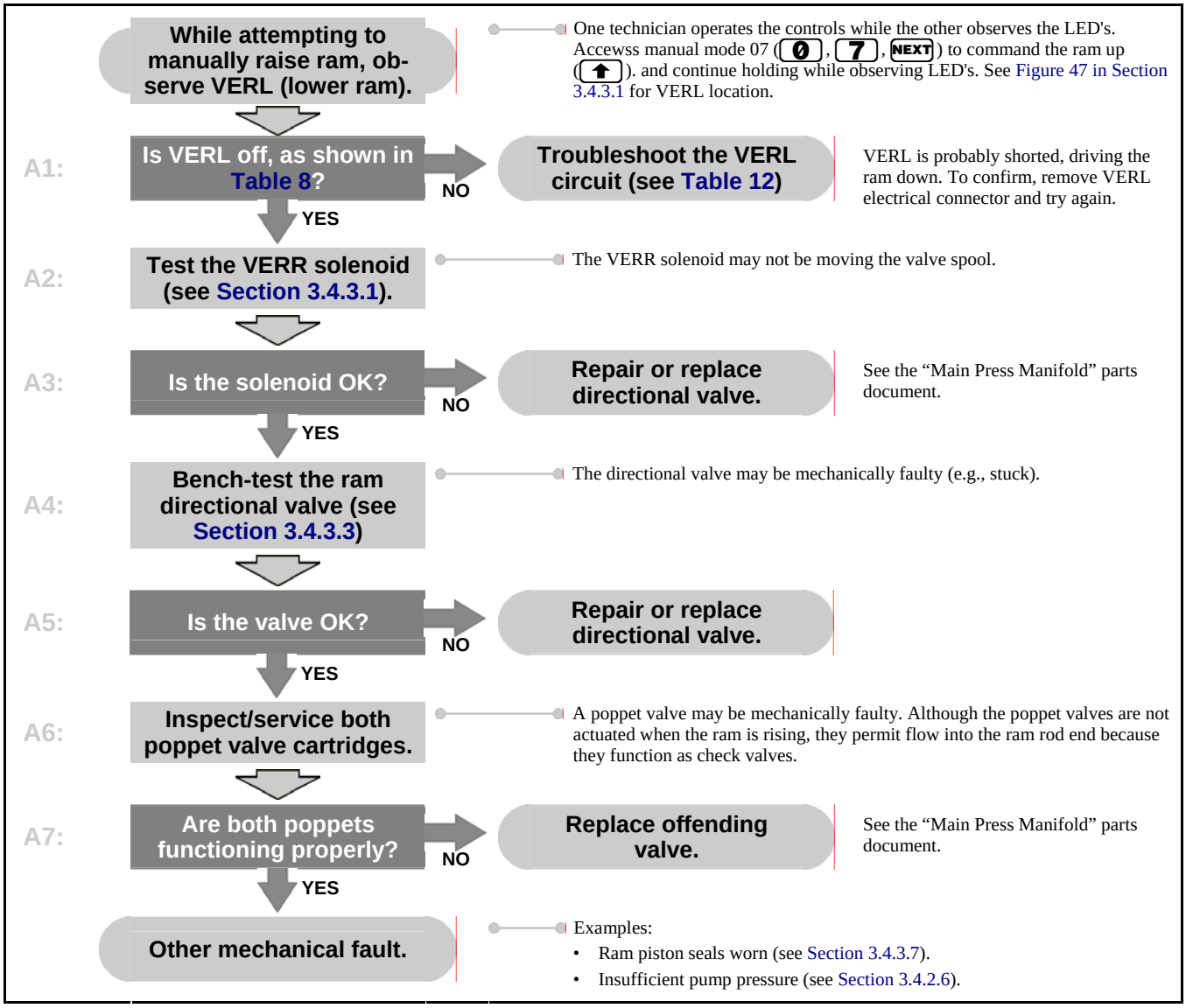

Perform the following troubleshooting if the ram ascends significantly slower than it did previously, resulting in longer cycle times.

Chart 4: Ram Goes Up Slowly (two technicians required)

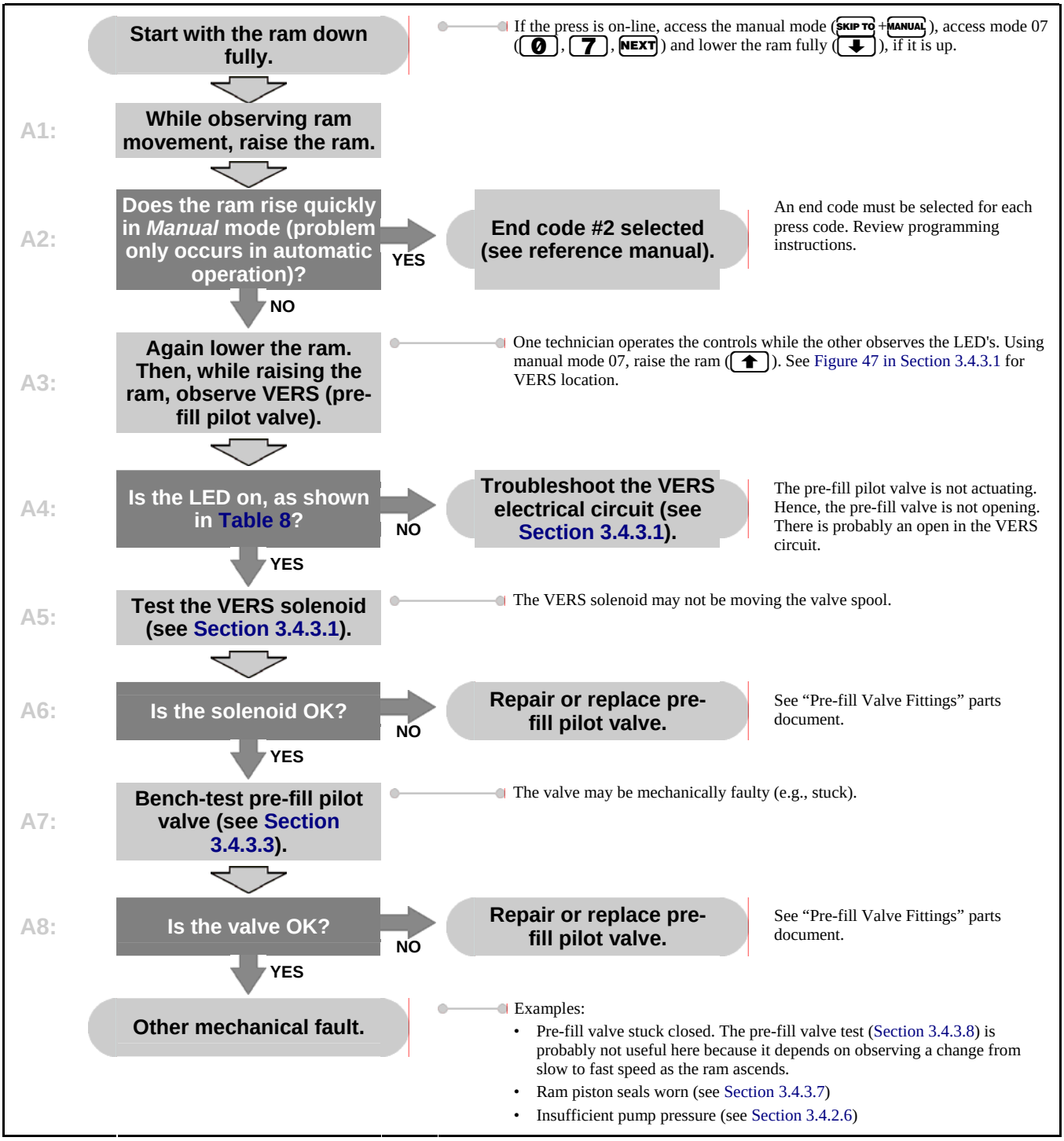

3.4.2.3. **Ram Drifts Down at Idle**—Referring to Table 9, when the press is idling in manual mode, all ram control valves are off. When it is idling in automatic and "Waiting for Load", all except VERR are off. In the latter case, VERR holds the ram directional valve in the "raise ram" position so that idle pressure will help counteract any tendency to drift down.

Table 9: Valve State During Idle

Type of Idle	VERDB "ram down bypass"*	VERS pre-fill	VERL lower ram	VERR raise ram	VEPP1 poppet #1"	VEPP2 poppet #2
Automatic ("Waiting for Load")	off	off	off	**on**	off	off
Manual	off	off	off	off	off	off
* The ram down bypass valve is open whrn VERDB is off and closed when on.						

Chart 5: Ram Drifts Down at Idle

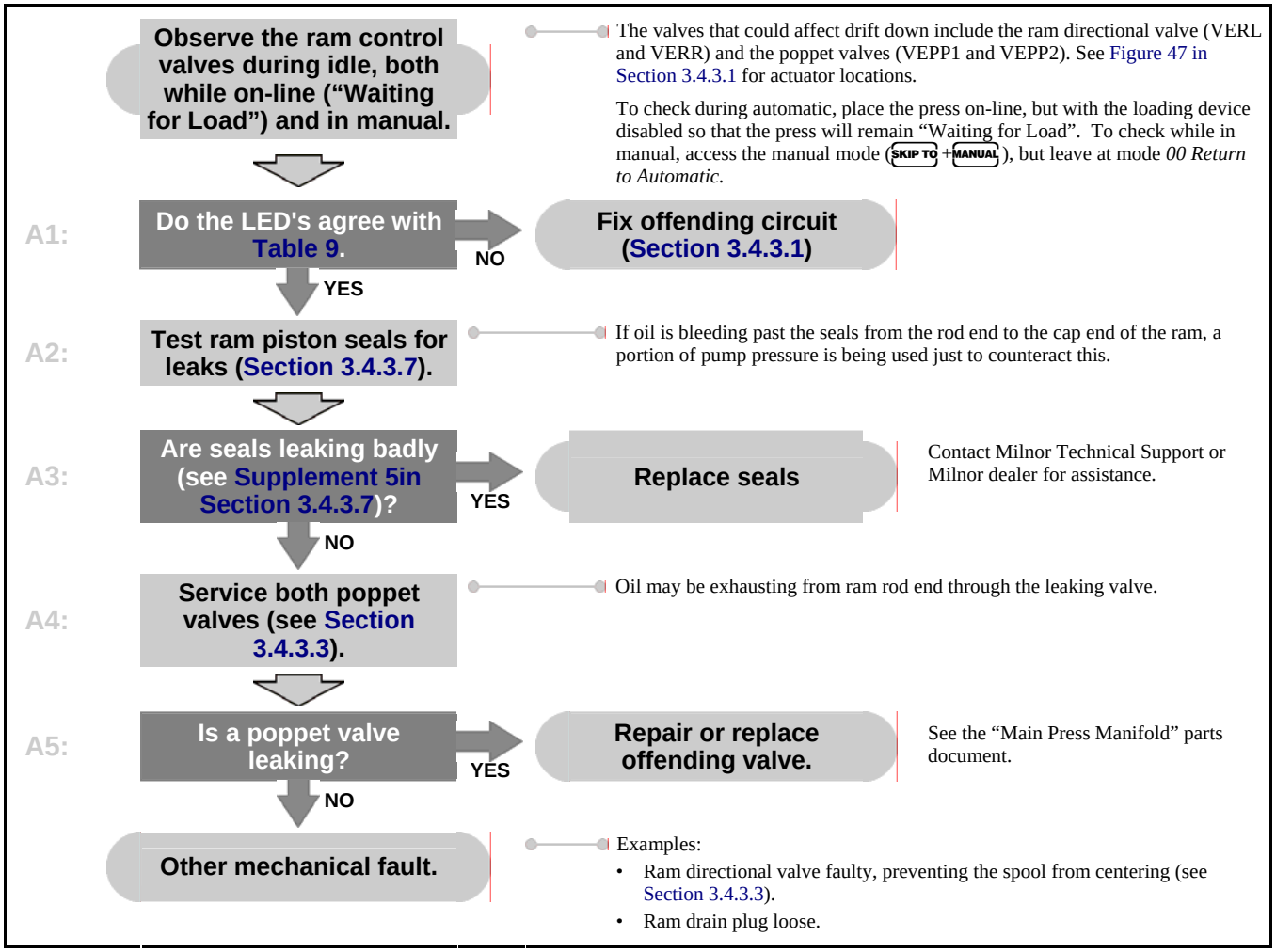

3.4.2.4. Neither the Ram Nor Can Will Move—When functioning properly, the pressure pump will begin producing approximately 400 psi as soon as the *Start* switch (①) is pressed and while idling. Idle pressure is sufficient to raise/lower the can and ram. If neither the ram nor can can be made to move in *Manual* mode (other than ram descent), this likely indicates that the pressure pump is producing llittle or no pressure.

Chart 6: Neither the Ram Nor Can Will Move

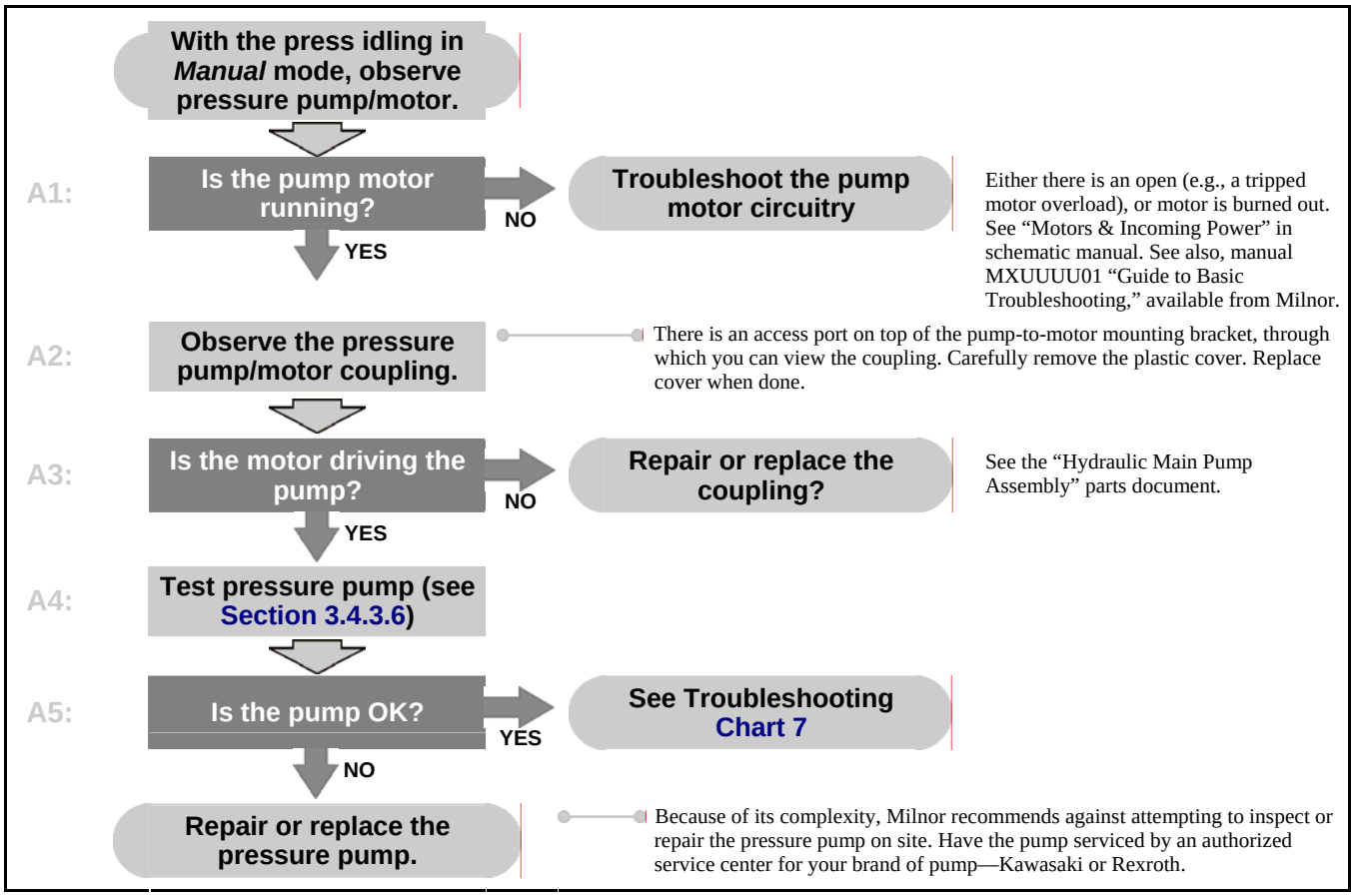

3.4.2.5. **Little or No Extraction**—Perform this troubleshooting if the press cycles successfully, but extraction substantially does not occur, as indicated by:

- press cycle time increases to maximum, causing tunnel hold time to increase
- drying times increase drastically
- cakes appear wet or can be pulled apart easily and pieces feel wet

Table 10: Valve States During Pressing (observe LED's on valve actuators)

When	VERDB ram down bypass*	VERS pre-fill	VERL lower ram	VERR raise ram	VEPP1 poppet #1	VEPP2 poppet #2
While manually pressing	on	off	on	off	on	on
During automatic operation (during production)	**	off	**	**	**	**
* The ram down bypass valve is open when VERDB is off and closed whrn on. ** These valves open and close according to the press code.						

Chart 7: Little or No Extraction (two technicians required)

Test for midrange pressure (see Section 3.4.3.10)

If the press can achieve mid-range pressure, the pressure pump, proportional valve and related control circuitry are likely OK.

A1: **Does press achieve mid-range pressure?**

NO → **Go to B1**

If yes, pressure is escaping from the ram down hydraulic circuit. If no, the pressure pump is producing minimal pressure.

YES ↓

A2: **While manually pressing goods, observe VERL.**

If the press is empty, allow a load to transfer in. One technician operates the controls while the other observes the LED's. Access manual mode 09 (0 , 9 , NEXT) and press the goods (hold ⬇). See Figure 47 in Section 3.4.3.1 for VERL location.

A3: **Is LED illuminated, as shown in Table 10?**

NO → **Troubleshoot VERL circuit (Section 3.4.3.1).**

Ram directional valve is not receiving signal to move to ram down position. This will not prevent the ram from descending, but it will prevent the ram cylinder from pressurizing.

YES ↓

A4: **While manually pressing, observe VERDB & VERS.**

See Figure 47 in Section 3.4.3.1 for VERDB and VERS locations.

A5: **Is VERDB on and VERS off, as shown in Table 10?**

NO → **Fix offending circuit (see Section 3.4.3.1)**

If either valve is open, this will vent pressure, preventing the ram from achieving high pressure.

YES ↓

A6: **Test the bypass valve (see Section 3.4.3.9).**

If this valve is stuck open, this will prevent pressure from exceeding about 400 psi. Refer to Figure 47. The bypass valve consists of an integral pilot solenoid and cartridge that operate a larger cartridge within the manifold.

A7: **Is the bypass valve functioning?**

NO → **Service both cartridges (see Section 3.4.3.2).**

See Section 3.4.3.2 and "Pre-Fill Valve Fittings" parts document.

Note 12: The problem is not a burned out solenoid (see Note 13 below).

YES ↓

A8: **Test the pre-fill valve (see Section 3.4.3.8)**

If this valve is stuck open, this will prevent pressure from exceeding about 200 psi.

A9: **Is the pre-fill valve functioning?**

YES → **Ram directional valve probably faulty**

Valve internal components stuck or damaged. See Section 3.4.3.3. and "Hydraulic Schematic" parts document.

NO ↓

A10: **Bench test the pre-fill pilot valve (Section 3.4.3.3).**

Valve internal components may be stuck or damaged.

Note 13: It is not necessary to test the solenoid because the solenoid holds the valve open against spring pressure. If the solenoid were bad, this would not cause the valve to remain open.

A11: **Is the pre-fill pilot valve functioning?**

NO → **Repair or replace pre-fill pilot valve.**

See "Pre-Fill Valve Fittings" parts document.

YES ↓

A12: **Test ram piston seals for leaks (see Section 3.4.3.7).**

If oil is bleeding past the seals from the rod end to the cap end of the ram, a portion of pump pressure is being used just to counteract this. Another typical symptom of this problem is drifting down of the ram during idle (see Section 3.4.2.3 "Ram Drifts Down at Idle")

Chart 7: Little or No Extraction (two technicians required)

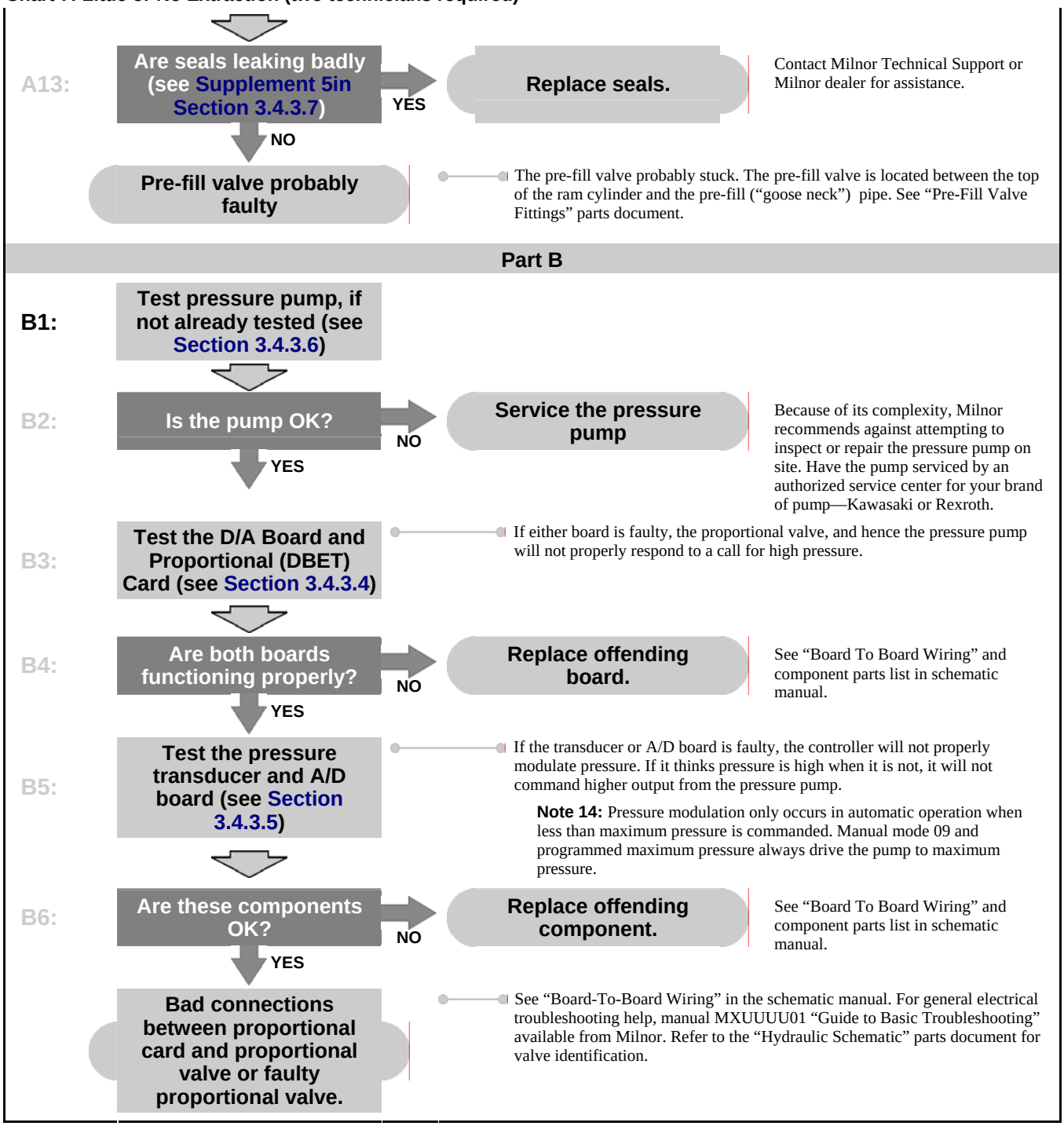

3.4.2.6. Commanded Pressure Not Achieved or Achieved Slowly—Perform the following troubleshooting if the press approaches, but cannot achieve the pressure(s) called for by the press codes (up to rated pressure, as listed in Table 11 below), or takes significnatly longer to achieve pressure (see also Supplement 4 below). This is usually accompanied by an increase in press cycle time, which causes tunnel hold time to increase. If pressure is not achieved, drying times will likely increase.

Table 11: Applicable Milnor® Single Stage Press Models and Pressure Ratings

Model Prefix	Rated (Maximum System) Pressure - psi (bar)	
	Pump (Gauge) Pressure	Diaphragm Pressure
MP1603	4600 (317)	508 (35)
MP1604	4350 (300)	725 (50)
MP1A03	4600 (317)	580 (40)

Supplement 4

About Impaired Pressing

Impaired pressing—the inability of the press to achieve, or quickly achieve **rated** pressure.

Impaired pressing should be rectified if it is serious enough to affect the machine's operating performance (see reference manual) or increase drying times. A small reduction in the maximum achievable pressure will do neither if the pressures specified in all press codes are below the pressure at which the problem is evident. If the machine can quickly achieve any **programmed** pressure, correcting a minor impairment is not likely to provide useful benefits.

Impaired pressing can only be determined from an accurate pressure reading. Neither reduced operating performance nor increased drying times necessarily indicate a pressure problem. These can result from numerous causes such as changes in goods types, load sizes, and/or press codes, none of which relate to the machine's ability to achieve pressure. Nor is there an error condition that signals impaired pressing. If the pressure called for by the press code is not achieved, the step will end at the programmed maximum time (see reference manual) and processing will continue.

For the most accurate pressure reading, observe the system pressure gauge (top gauge on the gauge cluster). The three displays that show pressure (normal run display, viewing analog input..., and manual function 09 *Pressurize Ram*, which get their data from the pressure transducer, are approximate, and the first two display diaphragm pressure. Only manual function 09 displays approximate pump pressure.

Pressing can be impaired by a malfunctioning component or bad pressure setting. If it can be determined at the outset that a pressure setting is the likely cause, do not perform these procedures. Instead, refer to document BIPPMT02, “Setting Single Stage Press Pressures.” Two situations that can cause pressure settings to fall out of adjustment are:

1. **“breaking in” a new press**—The maximum achievable pressure may **gradually** decline during the first few months of operation, as hydraulic components such as seals are “broken in.” In this instance, adjust the pressure settings to restore full pressing capability.
2. **major hydraulic component replacement**—This is especially true for the pressure pump. Four adjustments are located on the pump itself and may be mis-adjusted on the replacement pump. Always check pressures in accordance with document BIPPMT02 following this type of servicing.

Chart 8: Commanded Pressure Not Achieved or Achieved Slowly

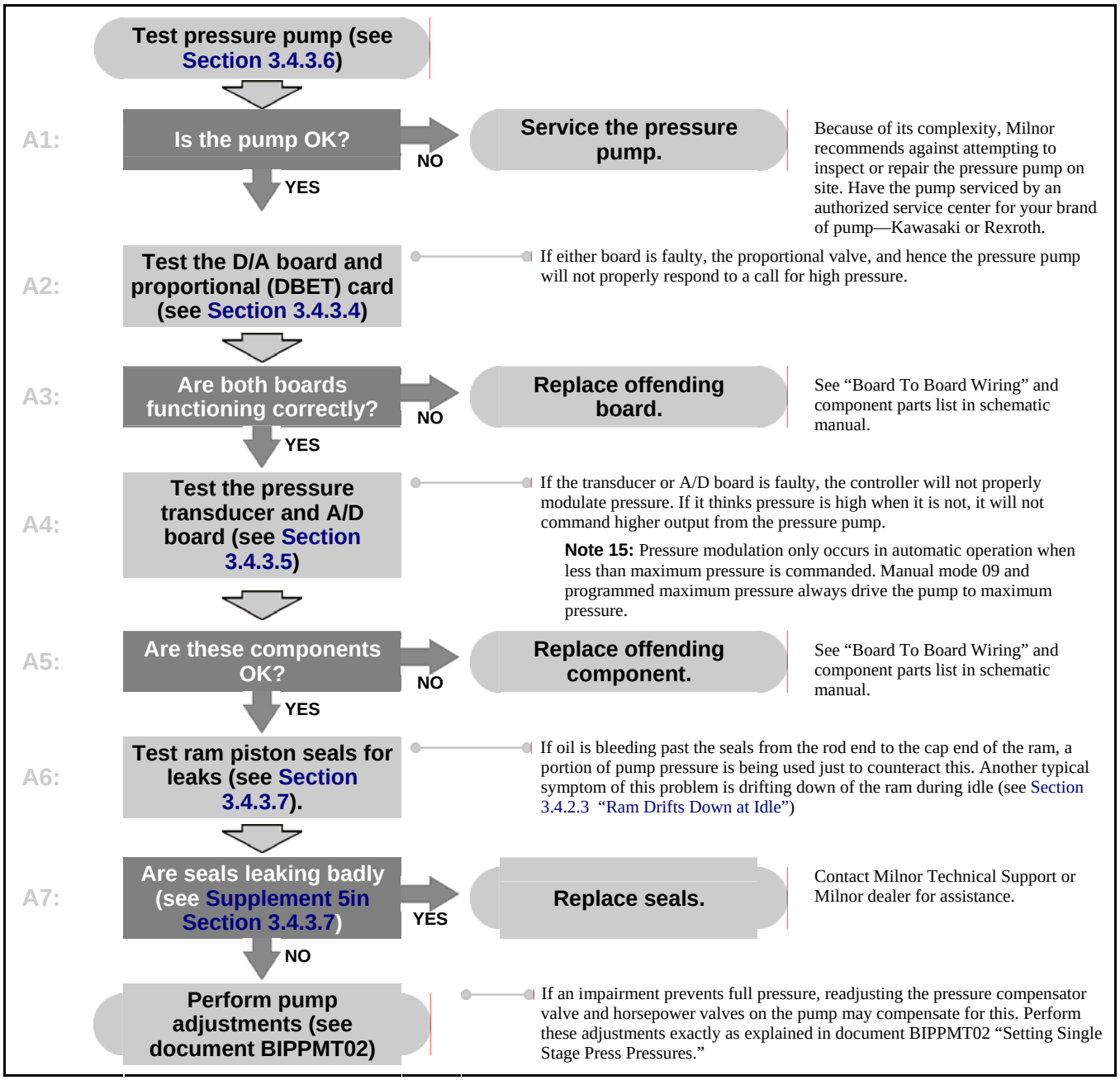

3.4.3. Functional Tests

3.4.3.1. How to Check Electric Valve Actuator Circuits and Test the Solenoids—The six electrically operated, ram hydraulic valves and their actuators are identified in Figure 47. Useful information about the actuator electrical circuits is provided in Table 12.

Figure 47: Ram Electrically Operated Hydraulic Valves

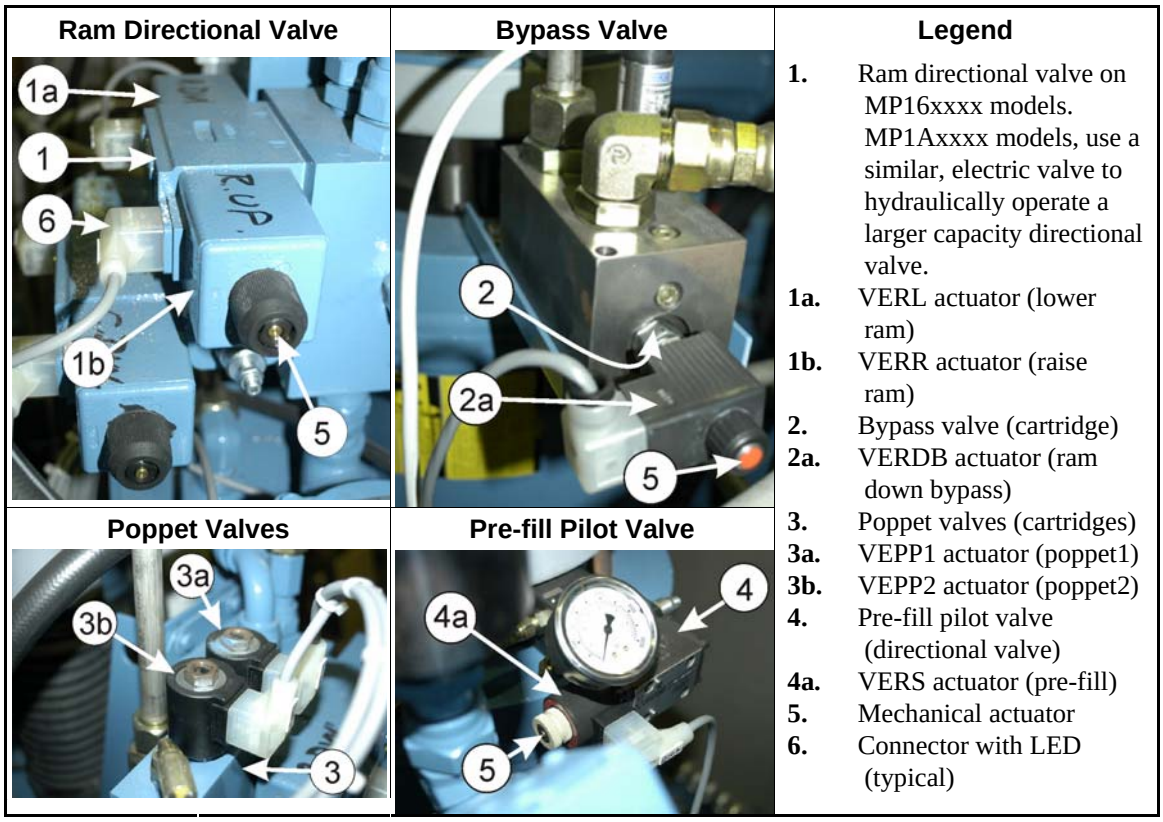

Table 12: Digital Outputs for Ram Functions (electric valves)

Function	Output Display		I/O Board				Wire #	Controlled Components	
	Page	Position	Board #	LED #	Connector	Pins		Actuator	Valve
Lower ram	0	c	BIO-1	2	1MTA5	17-8	30	VERL (lower)	Ram directional valve (coil B)
Raise ram	0	d	BIO-1	3	1MTA5	16-7	31	VERR (raise)	Ram directional valve (coil A)
Pre-fill	0	a	BIO-1	0	1MTA5	19-10	28	VERS	Pre-fill pilot valve
Poppet #1*	0	h	BIO-1	7	1MTA5	11-1	37	VEPP1	Poppet valve #1
Poppet #2*	1	b	BO24-1	9	1MTA13 1MTA14	10 1	38	VEPP2	Poppet valve #2
Ram down bypass	1	f	BO24-1	13	1MTA14	14-4	27	VERDB	Bypass valve
*** The poppet valves, which operate simultaneously, open to allow flow into and out of the ram rod end.**									

Check circuit function by observing the on/off state of any actuator at three locations: the output displays, the LED's on the I/O boards, and the LED's on the actuator electrical connector (see also BIUUUT04 “Onboard Troubleshooting Aids for Digital Outputs and Inputs”).

All of the electrically operated hydraulic valves except the poppet valves have mechanical actuators (see Figure 47). Assuming you have determined that the electrical circuit is functioning properly (the LED on the valve actuator illuminates when it should), use the mechanical actuator to determine if the problem with a valve is due to a non-functioning solenoid. Observing warning statement **55**, carefully press the mechanical actuator (with a tool, if necessary) when you see the LED illuminate. If the valve functions properly, the problem is with the solenoid.

WARNING 55: Crush Hazards—Hydraulic valve mechanical actuators bypass the safety of the electrical controls. Depressing a mechanical actuator may cause immediate movement.

- Use extreme caution when operating a hydraulic valve mechanically.

The bypass valve and poppet valves use removable cartridges that can be inspected and serviced as explained in Section 3.4.3.2, below. The directional valves can be removed and bench tested, as explained in Section 3.4.3.3.

3.4.3.2. How to Inspect and Service Hydraulic Valve Cartridges—Several easily removable hydraulic valve cartridges are used on the press. These are of various designs, depending on their function: operational valve, pressure relief valve, or pressure regulator. The pressure relief valves and pressure regulators are identified in Figure 48. A cartridge can malfunction as a result of contamination (e.g., metal shaving) in the hydraulic fluid, or damage (e.g., worn seals). Additionally, a relief valve or pressure regulator can be improperly adjusted. Cartridges are designed to be inspected, cleaned, and seals replaced, but not rebuilt. With care, pressure relief and pressure regulator cartridges can often be removed, serviced and replaced without changing their adjustment.

Figure 48: Pressure Relief Valves and Regulators

Can and System Pressure Adjustments

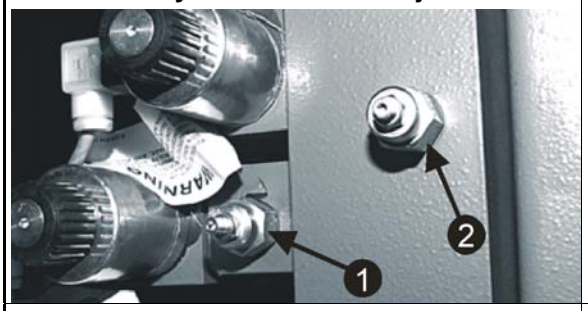

Legend

1. Can pressure regulator
2. System relief valve
3. Ram relief valve
4. Pre-fill pilot pressure regulator
5. Pre-fill pressure gauge

Ram Relief Valve on Poppet Valve Manifold

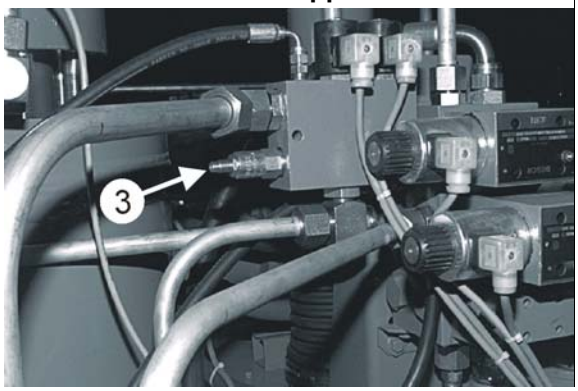

Pre-fill Pilot Valve and Related

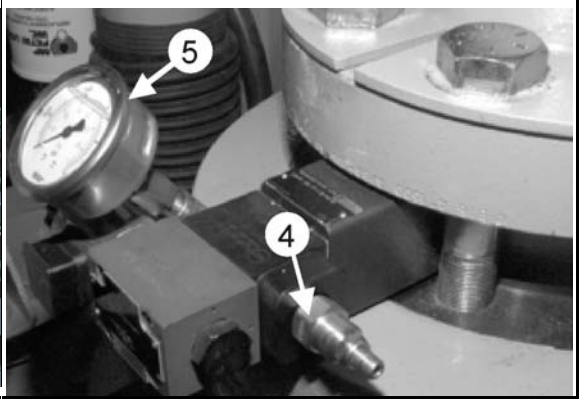

1. Secure the can and ram by lowering them completely or installing the safety stands/bars. Then lockout/tagout power.

2. Each cartridge has a large integral mounting nut. Additionally, pressure relief/regulator cartridges have a smaller lock nut for locking down the setting and a hex socket (Allen) screw for adjusting the pressure setting. Remove the cartridge by turning the mounting nut only.
3. Inspect the cartridge for dirt and wear. If components such as seals appear worn or damaged, Milnor recommends replacing the cartridge. A seal kit may be available from a third party, but this can be done afterward and the old cartridge retained as a spare. If the cartridge appears serviceable, clean it as follows:
   a. Carefully remove obvious particles then submerge the cartridge in clean mineral spirits.
   b. Through the nose of the cartridge, manually operate the working parts several times. Use a piece of plastic tubing (see Figure 49) to avoid damaging sensitive components such as screens. If possible, do this with the cartridge submerged in the mineral spirits.
   c. **Pressure relief/regulators only:** If you must back off on the adjustment screw for effective cleaning, hold the cartridge in a vice, loosen the lock nut, and turn the adjustment screw with a hex head (Allen) screw. **However, once you change the pressure setting, you will need to reestablish the proper setting using the procedures in document BIPPMT02 "Setting Single Stage Press Pressures", after re-installing.**
   d. Use clean (filtered) compressed air to blow dry the cartridge.
4. Dip the dry cartridge in clean hydraulic oil then reinstall.

Figure 49: Operating Valve Cartridge

Figure 50: Bench-testing a Directional Valve

3.4.3.3. How to Bench Test Directional Valves—Assuming you have determined that the valve actuator circuit is functioning properly (the LED on the actuator illuminates when it should), you can bench test a directional valve as follows:

1. **Secure the can and ram by lowering them completely or installing the safety stands/bars. Then lockout/tagout power.**
2. Remove the valve actuator electrical connector(s). Make sure to mark connectors as needed for proper replacement.
3. Remove the valve housing by removing the four mounting bolts.
4. Allow oil to drain from the valve. Remove any seals or o-rings that might otherwise fall off.
5. Carefully clamp the valve to a bench or hold in a vice for inspection. You can:
   - Visually inspect for damage, contaminants, worn seals, etc.
   - Check valve functioning. Press the mechanical actuator(s), looking for spool movement.
   - Blow air into the "P" port (see Figure 50) and, while depressing the actuator, verify that the air exits the proper port ("A," "B," or "T"), or at least moves from port to port.
6. When re-installing the valve, use care to keep the valve clean, replace all seals, and match up electrical connectors properly.

3.4.3.4. How to Test the D/A Board and Proportional (DBET) Card Analog Output—

The pressure pump sends oil to the proportional valve via a small hydraulic control line. When the proportional valve is fully open (maximum oil flow through the control line), the pump produces **minimum** pressure; that is, about 400 psi (idle pressure). When the proportional valve is fully closed (no oil flow through the control line), the pump produces **maximum** pressure; that is, full rated pressure as listed in Table 11 in Section 3.4.2.6. As the voltage supplied by the proportional (DBET) card to the proportional valve **increases**, the valve **closes.** The proper relationship among output board values, valve position and pump output at each end of the range is summarized in Table 13.

Table 13: Relationships Among Pump Control Components at Each End of Range

D/A Board (digital counts)	D/A Board Output (VDC)	Proportional (DBET) Card Output (millivolts)	Proportional Valve Position	Pressure Pump Output
0000	0 (zero) VDC	0 (zero) millivolts	fully open	minimum (idle pressure)
4095	10 VDC	16 millivolts	fully closed	maximum (rated pressure)

Chart 9: How to Test the D to A Board and Proportional (DBET) Card Analog Output

Start with the ram down and a full load of goods

If the press is empty, permit aload of goods to transfer in, then access the manual mode (SKIP TO + MANUAL).

A1: **While manually pressing the goods, take voltmeter reading across DBET card, pins 28C and 30C.**

The proportional (DBET) card is shown at left. See “Board to Board Wiring” in schematic manual. Access manual mode 09 (0, 9, NEXT) and apply press pressure (hold ↓) while reading voltage.

A2: **9 to 10 VDC?**

NO → **D to A board or related circuitry faulty.**

This is the voltage that must be supplied by the high resolution D to A board (BDA-1) to the DBET card (BPC-1) when full pressure is commanded.

YES ↓

A3: **While manually pressing the goods, take voltmeter reading across DBET card, pins 20C and 22C.**

See “Board to Board Wiring” in schematic manual. Access manual mode 09 (0, 9, NEXT) and apply press pressure (hold ↓) while reading voltage.

A4: **12 to 20 millivolts?**

NO → **Proportional card or related circuitry faulty.**

This is the voltage that must be supplied by the DBET card to the proportional valve when full pressure is commanded.

YES ↓

Tip: Although 12 to 20 millivolts is an acceptable range, the optimum value is 16 millivolts. Adjust the maximum pressure potentiometer (labeled GW) on the DBET card to achieve this value, as explained in BIPPMT02 "Setting Single Stage Press Pressures."

D to A board, proportional card and related circuitry OK.

3.4.3.5. How to Test Pressure Transducer and A/D Board Analog Input—The pressure transducer data is used by the controller 1) to show pressure on the controller display and 2) to maintain (modulate) programmed pressure (see Note 16). If you manually press a load of goods using manual mode *09 Pressurize Ram*, displayed pressure should match system gauge pressure. The proper relationship among transducer, A/D board, and pressure values, at each end of the range, for the two types of transducers in current use (see Note 17), is shown in Table 14.

Note 16: The pressure transducer is in the ram down circuit so it only supplies data during ram descent and pressing. Commanding full pressure with manual mode *09*, drives the pump to maximum (no modulation).

Note 17: The *Pressure Sensor Zero Offset* configure decision adjusts for the type transducer installed. Do not use this configure value to attempt to "calibrate" displayed pressure with gauge pressure.

Table 14: Relationships Among Pressure Sensing Components at Each End of Range

Pressure Transducer Output (VDC)		A/D Board (digital counts)	System Pressure (psi)
0 (zero)-based type	0.1 (zero)-based type		
0 VDC	0.1 VDC	0000	0 (zero) psi
5 VDC	5.1 VDC	4095	5000 psi

Chart 10: How to Test Pressure Transducer and A/D board Analog Input

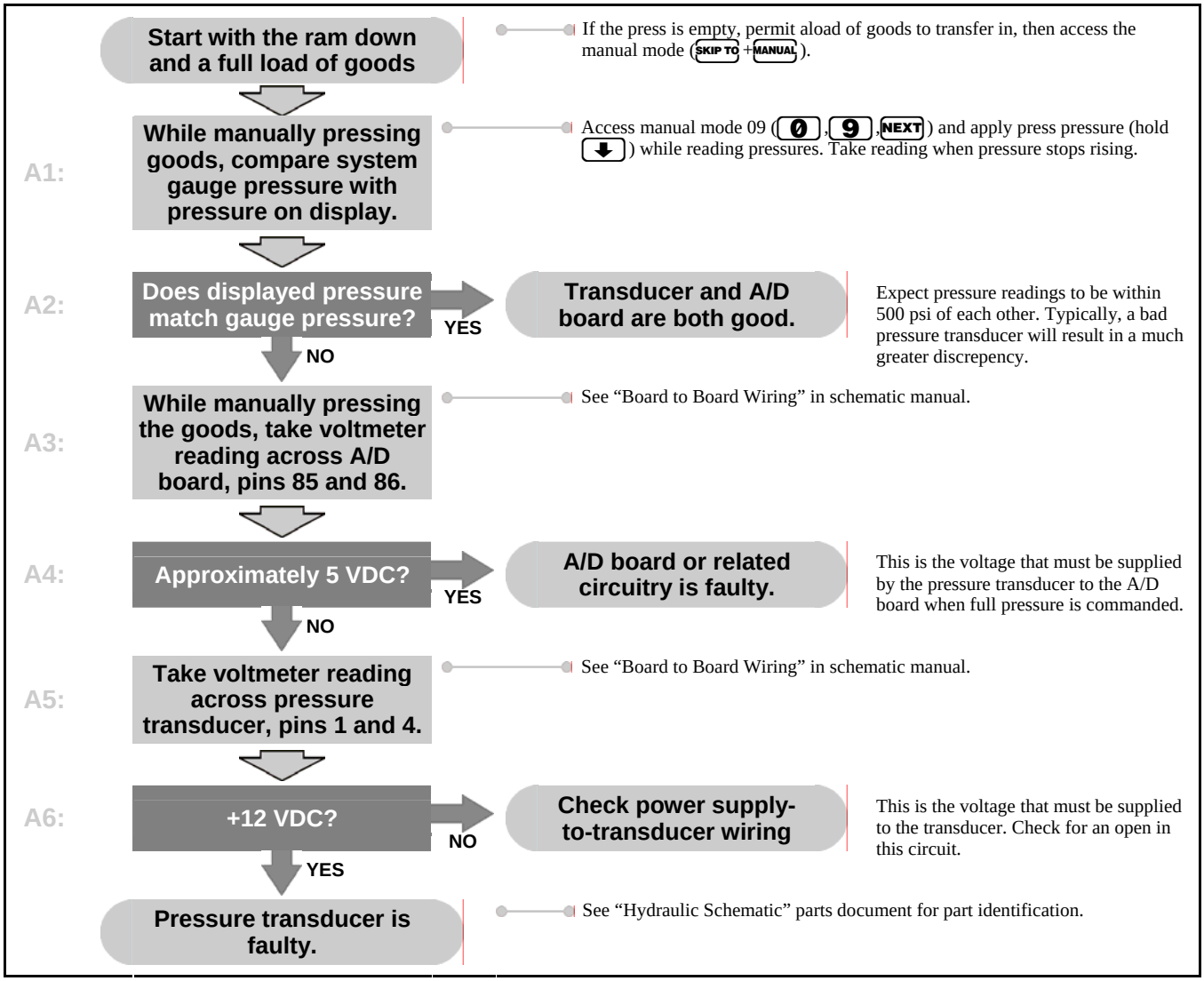

3.4.3.6. How to Test the Pressure Pump—For the press to achieve and maintain commanded pressure while pressing goods, the pressure pump, **along with several other components**, must function properly. Some of the other components are the proportional valve and related electronics, the pressure transducer and related electronics, and the ram piston seals. Use this procedure to test the pressure pump independent of all other components.

Chart 11: Pressure Pump Test

Lockout/tagout power.

A1: **Plug the pressure pump control port.**

The port to be plugged is circled at left. Use a -4 (1/4") o-ring base plug (supplied in kit KYSSTRBLSH). It is not necessary to cap the hose end, but tape over it for cleanliness. This simulates a fully closed proportional valve.

A2: **Restore power and start machine (⊖, ①)**

Allow the machine to remain in *Manual* mode, selection *00 Return to Automatic*. The system should immediately go to full pressure without the need to press a load.

A3: **Compare system pressure with rated pressure.**

Observe the system pressure gauge (top gauge on gauge cluster). See Table 11 "Applicable Milnor® Single Stage Press Models and Pressure Ratings" in Section 3.4.2.6 for the rated pressure for your machine.

A4: **Is rated pressure achieved?**

YES → **Pump OK. Lockout/tagout power. Reconnect hose. Done**

NO ↓

A5: **Service the system relief valve per Section 3.4.3.2 then recheck pressure.**

This ensures that the system relief valve is functioning properly, in the event that it is contaminated or damaged. This is very unlikely because, with proper adjustment, this valve never opens.

A6: **Is rated pressure achieved?**

YES → **Pump OK. Lockout/tagout power. Reconnect hose. Done.**

NO ↓

A7: **Set system relief valve to maximum (5000 psi) then recheck pressure.**

This ensures that the system relief valve is not venting pressure before the full pressure is achieved. It is very difficult to open the valve (turn clockwise) under pressure, but easy to close (turn counterclockwise) under pressure. Stop machine (⓪), turn adjustment screw full clockwise, then start machine (①). See also document BIPPMT02 "Setting Single Stage Press Pressures".

A8: **Is rated pressure achieved?**

NO → **Pressure pump needs servicing.**

YES ↓

A9: **Reset system relief valve**

With the machine running (①), one person turns the adjustment screw counterclockwise while another watches the system pressure gauge. Turn just until pressure falls below rated. With the machine stopped (⓪), make 1/2 clockwise turn of the adjustment screw then tighten the locking nut.

Pump OK. Lockout/tagout power. Reconnect hose. Done

3.4.3.7. How to Test the Ram Piston Seals—As the ram begins pressing a load of goods, the goods compress, and the ram piston moves down slightly, oil in the rod side of the ram exits through the rod-side tubing. As the goods are compacted and ram movement decreases, this flow of oil should decrease. If the flow increases, this indicates that a significant amount of oil is leaking past the piston seals as pressing pressure increases. Test this as follows:

1. Permit a load of goods to transfer into the press, but immediately take the the machine off line. The can will be down and the ram up.
2. Lower the ram (*manual mode 07*) just until the diaphragm is resting on the goods.
3. Lockout/tagout power to the machine.
4. Referring to Figure 51, modify piping as follows (cap and hose are provided in kit KYSSTRBLSH):
   a. Disconnect the ram rod-end (ram up) tubing at the poppet valve manifold.
   b. Cap the manifold connector.
   c. Connect a hose to the disconnected tubing. Run the other end of the hose into a bucket.
5. Restore power and, while observing the flow of oil into the bucket, call for pressure (*Manual mode 09*). If flow decreases as the goods are pressed, the piston seals are good. If it increases, the seals may need to be replaced. However, see Supplement 5.
6. Lockout/tagout power and restore the permanent connections.

Figure 51: Where to Disconnect Tubing to Test Ram Piston Seals

Poppet Valve Manifold

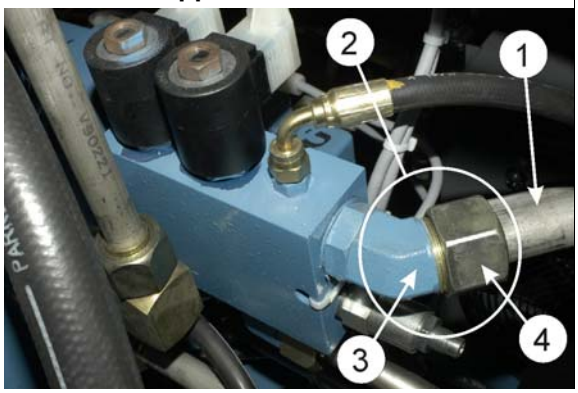

Legend

1. Hydraulic line to ram cylinder rod end
2. Disconnect here.
3. Cap this side.
4. Connect hose this side.

Supplement 5

About Ram Piston Seal Replacement

A certain amount of seal leakage is normal. Ram piston seal replacement is a major service procedure requiring expertise and heavy lifting equipment. Before proceeding with this servicing, evaluate the costs and benefits. As a general rule, avoid this servicing until:

1. all other possible causes are ruled out, and
2. maximum achievable pressing pressure is unacceptable.

3.4.3.8. How to Test the Pre-fill Valve—In a properly functioning press, when the ram rises, the pre-fill valve opens to speed ascent by permitting a large volume of oil to exhaust through the large pre-fill pipe. If the pre-fill valve closes in mid-ascent, the ram will slow down considerably. The following procedure uses this observation to verify that the prefill valve is working:

1. Unscrew the electrical connector for the pre-fill pilot valve actuator (VERS), so that it can be quickly unplugged, but leave it electrically connected.
2. Lower the ram and can fully if they are up (*Manual mode 02*).
3. Call for ram up (*Manual mode 07*).
4. While the ram is rising, unplug the VERS connector. If the ram's speed slows noticeably, the pre-fill valve, and indeed, the pre-fill hydraulic circuit and the pre-fill pilot valve are working. If not, there is a problem with this system.
5. Replace and secure the VERS connector.

3.4.3.9. How to Test the Bypass Valve —The bypass valve remains open except when pressing pressure is called for to prevent ram pressure from exceeding about 200 psi at all other times. If this valve is stuck open, the ram cannot pressurize. If you have determined that the bypass valve electrical circuit is functioning properly by observing the LED on VERDB (VERDB actuates to **close** this normally open valve), you can test this valve for a mechanical problem as follows:

1. Lockout/tagout machine power.
2. Disconnect the bypass valve-to-tank return line at the fittings indicated in Figure 52. Cap the valve side and plug the hose end to simulate a closed bypass valve (cap and plug are provided in kit KYSSTRBLSH).
3. Restore power. If there are no goods in the press, permit a load of goods to transfer to the machine then take the machine off line.
4. Attempt to press the goods using *Manual Mode 09*. If high pressure is achieved (as indicated by the system pressure gauge), the bypass valve is not functioning properly.
5. Lockout/tagout power and reconnect the permanent hose connection.

Figure 52: Bypass Valve: Where to Disconnect Hose

3.4.3.10. How to Test for Mid-range Pressure—This test is part of troubleshooting "Little or No Extraction (no error)," but may be helpful in other situations as well. If the ram is permitted to drive against its upper mechanical limit of travel, ram relief pressure (displayed on the middle gauge on the gauge cluster) should rise to that set on the ram relief valve.

1. Lower the diaphragm onto the press bed.
2. Disconnect the electrical cable to the ram up proximity switch. This is the top switch on the proximity switch mounting plate (see document BIPPMM02 “About the Ram Proximity Switches...”)
3. Raise the ram fully and continue to command ram up once the ram stops at its upper limit.

4. While continuing to command ram up, observe the ram pressure gauge (middle gauge on the gauge cluster).
5. After reading the pressure, lower the ram (diaphragm to the press bed and reconnect the ream up proximity switch.

The specified ram relief valve setting is 1500 psi. If a ram pressure gauge reading of 1200 psi or higher is obtained, it is unlikely that "Little or No Extraction..." is caused by faulty pressure pump.

— End of BIPPMT01 —

BIPPMT02 (Published) Book specs- Dates: 20101202 / 20101202 / 20101202 Lang: ENG01 Applic: PPM

3.5. Setting Single Stage Press Pressures

This document supersedes document IIFUUC02 for all single stage press models with the Kawasaki pump (see IIFUUC02 for the older Rexroth pump). Once set at the factory, pressures do not normally need readjustment unless a major component (e.g., pressure pump) is replaced.

Although these procedures are straightforward, unanticipated problems resulting in costly damage can arise. Personnel must have an in-depth knowledge of hydraulic systems and be familiar with manual operation of the press.

Notice 56: Understand the press servicing hazards—Before performing press maintenance, review document BIPPMS01 “Safe Servicing...”

Table 15, which follows, describes the components that may need adjusting. Table 16, following it, specifies the values to be used. The rows in Table 15 correspond to those in Table 16.

Table 15: List of Adjustments

Adjustment Component	What It Does	Means of Adjusting
Full system pressure (no single adjustment)	Determines maximum programmable pressing pressure.	See four items with asterisk (*) below.
Idle pressure valve	Controls idle (also called standby or minimum) pressure (system pressure while the operating press is idle)	Hex socket screw and locking nut on pump
*** Pump pressure compensator valve**	Limits system pressure once its set point (full system pressure) is achieved.	Hex socket screw and locking nut on pump
1st stage horsepower valve (torque limiter)	Limits motor amperage draw at predetermined midrange (1st stage) and high (2nd stage) pressures by adjusting pump operating characteristics (see Note 18).	Adjustment nut and locking nut on pump
*** 2nd stage horsepower valve (torque limiter)**		Hex socket screw and locking nut on pump
*** System relief valve**	Bleeds off pressure exceeding permissible full system pressure.	Hex socket screw, locking nut on manifold
Pre-fill pilot pressure regulator	Regulates pressure exceeding that permitted for the pre-fill pilot valve.	Hex socket screw, locking nut on valve
Ram relief valve	Bleeds off pressure exceeding that permitted on rod end of ram cylinder.	Hex socket screw, locking nut on manifold
Can pressure regulator	Regulates pressure exceeding that permitted for can cylinders.	Hex socket screw, locking nut on manifold
*** Proportional valve maximum pressure pot.**	Calibrates the DBET card with proportional valve to ensure full valve closure.	Adjustable pot on DBET card
Proportional valve ramp up potentiometer	Sets how fast the proportional valve closes (swash plate moves to increase output).	Adjustable pot on DBET card
Proportional valve ramp down potentiometer	Sets how fast the proportional valve opens (swash plate moves to decrease output).	Adjustable pot on DBET card

Note 18: The horsepower adjustments enable the pump to maintain the maximum permissible load on the motor (full load amperage) as flow decreases and pressure increases (destroke), to ensure that the motor does not stall, but full pressure is achieved.

Table 16: Adjustment Specifications

Adjustable Condition	Specification (Kawasaki pump only)				Means of Measuring
	MP1603 (35 bar)		MP1604 (50 bar)	MP1A03 (40 bar)	
	low flow	high flow			
Full system pressure	4600 psi	4600 psi	4350 psi	4600 psi	See four adjustments with an asterisk (*) below
Idle pressure	400 psi				Observe system pressure (top) gauge
***Pump compen-sation pressure**	4600 psi	4600 psi	4350 psi	4600 psi	
1st stage horsepower (amperage draw)	Achieve full load amperage rating on motor nameplate (+/- 3%) while ram relief pressure at:				Ammeter measurement while ram relief pressure is lowered to value shown
	1200 psi @ 60 Hz	1350 psi @ 50 Hz	625 psi @ 60 Hz	750 psi @ 50 Hz	
	825 psi @ 60 Hz	985 psi @ 50 Hz	880 psi @ 60 Hz	1060 psi @ 50 Hz	
*** 2nd stage horsepower (amp. draw)**	Achieve full load amperage rating on motor nameplate (+ 5% / -0%) while system pressure is 300 to 400 psi below rated full system pressure.				Ammeter measurement while system pressure is lowered to value shown
*** System relief pressure**	Rated full system pressure plus 1/2 clockwise turn of the adjustment screw				Observe system pressure gauge then 1/2 CW turn
Pre-fill pilot max. pressure	2000 psi				Observe pre-fill pressure gauge (near valve)
Ram relief pressure	1200 psi				Observe ram relief pressure (middle) gauge
Can maximum pressure	800 psi				Observe can relief pressure (bottom) gauge
*** Proport. valve max. pressure**	4600 psi	4600 psi	4350 psi	4600 psi	Observe system pressure gauge
Proport. valve ramp up rate	minimum setting (This control must have no effect on valve or pump operation.)				Measurement not needed
Proport. valve ramp down rate					

3.5.1. Preparations, Precautions and Tips

3.5.1.1. Two technicians are needed.—One technician operates the controls and monitors the pressure gauges. The other performs the adjustments, which are located on top of the machine.

CAUTION 57: Multiple hazards—Various components above the top plate move or become hot or energized. Hydraulic piping may leak. Working area is tight and may be slipery. When maintenance work necessitates getting on top of the press:

- Ensure that only qualified service personnel perform top-of-press work.
- Identify and stand clear of components on top of the machine that move (such as the diaphragm rod) or become hot (such as the pump and motor).
- Use safe, appropriate equipment for getting on and off of the machine.
- Ensure solid footing and guard against slippery surfaces. Wash surfaces with detergent.

3.5.1.2. **Be prepared to load goods.**—Several adjustments, starting with the 2nd stage horsepower adjustment, must be done with a full load of wet goods in the machine. All other adjustments except for the last (set can pressure), which should be done with the machine empty, may be done with the machine loaded or empty.

Notice 58: For safety and convenience—Avoid manually loading goods.

- If the service procedure must be performed with goods in the machine, permit the press to accept a load of goods automatically, then take the machine off-line.
- If it becomes necessary to manually load or adjust goods, use extreme caution. Always follow the published safety precautions (see safety manual).

3.5.1.3. **Have needed materials on hand.**—Tools will likely include:

- Ammeter and voltmeter
- Small, flat blade screwdriver
- Hex head (Allen) wrench set
- Closed-end wrenches (various sizes)
- -4 (1/4") O-ring base plug (for the pump control port)

Notice 59: Troubleshooting, not covered here, may be required—This procedure provides minimal troubleshooting and assumes that, aside from the need for adjustment, the press pressure components are functioning properly. If you encounter problems not covered here, refer to the detailed troubleshooting procedures, elsewhere, or contact Milnor technical support. Additional equipment will be needed if more in-depth troubleshooting is required.

Tip: You will need to refer to the pump motor full rated amperage when setting motor horsepower (amperage draw). Write down this value as stated on the motor nameplate.

3.5.1.4. **Get the gist of the procedure.**—The overall procedure is summarized in Section 3.5.2. Each adjustment is explained in a flow chart. Read the left side of the chart for an overview of the adjustment steps. The right side provides details.

All pressure adjustment components are similar to those shown in Figure 53 below.

Figure 53: How Pressure Adjustments Are Made

Typical Adjustment Components (idle pressure (left) and pump compensation pressure (right) adjustments shown)	Legend
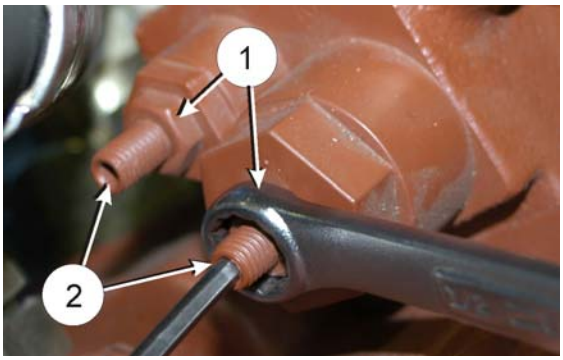	1. **Locking nut**—Turn counterclockwise to unlock before adjustment; turn clockwise to lock after adjustment. 2. **Adjustment screw (hex socket (Allen) screw)**—Turn counterclockwise to lower pressure; turn clockwise to raise pressure.

Tip: Most pressure adjustments can be made with pressure applied, so that when an adjustment screw

is turned, the pressure gauge moves dynamically. An exception is the system pressure relief valve. This valve can be opened (turn counterclockwise) to lower the pressure with pressure applied, but it is difficult, if not impossible, to close (turn clockwise) to raise the pressure with full pressing pressure applied.

All pressures (except pre-fill pilot pressure) are read on the pressure gauges shown in Figure 54. All pressure specifications are in pounds per square inch (abbreviated psi herein).

Figure 54: Where Most Pressures are Read

Gauge Cluster	Legend
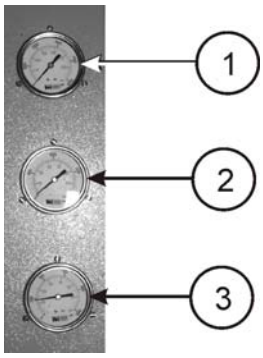	**1.** **System pressure gauge**—used in setting idle pressure, pump compensation pressure, 1st and 2nd stage motor horsepower (amperage draw), proportional valve maximum pressure, and system relief pressure. **2.** **Ram relief pressure gauge**—used in setting ram relief pressure and 2nd stage horsepower (amperage draw) **3.** **Can relief pressure gauge**—used in setting can relief pressure

Tip: It is likely that certain components will already be correctly adjusted. Check first for proper adjustment before changing the adjustment.

3.5.1.5. Adhere to the adjustment order.—This procedure explains the adjustments in the most efficient order. Each subsequent adjustment assumes that certain conditions were verfied and settings were made in previous adjustments. All adjustments should be done, and they should be performed in the order listed.

Tip: Performing only certain adjustments or changing the adjustment order risks leaving certain components improperly adjusted. If you must perform the adjustments differently than presented here, see the prerequisites for each adjustment listed in Section 3.5.2 “Summary of Adjustments”.

3.5.1.6. Ensure minimum ramp rates—These are not part of the adjustment procedure, but it is important to ensure that they are set to the minimum value, as explained below.

Chart 12: Ensure Minimum Ramp Rates

Power on (⊘). Remain in *Manual*.

All mechanical adjustments will be performed with the machine in *Manual* mode.

A1: **Ensure proportional valve ramp rates are at minimum (see Table 16).**

The proportional valve ramp up and ramp down potentiometers on the DBET card, are circled at left. The adjustment screws have no mechanical limits of travel. Turn each screw twenty (20) turns **counter**clockwise. This ensures that these controls have no effect on valve or pump operation.

Done

3.5.2. Summary of Adjustments

With preparations completed...

Prerequisites for all adjustments: Pump and motor functioning properly

A1: Set idle pressure (Section 3.5.3)

Prerequisites:
1. Proportional valve controls functioning properly or controls bypassed (by disconnecting the electrical feed to the valve)
2. Proportional valve mechanically functioning (i.e., fully open)

A2: Set pump compensation (full) pressure (Section 3.5.4)

Prerequisites:
1. Proportional valve bypassed (by plugging the pump control port)
2. System relief valve temporarily set to maximum pressure (5000 psi)
3. 1st and 2nd stage horsepower (amperage draw) properly set

Notice 60: The horsepower adjustments are factory-set and not likely to need major adjustment. On this assumption, pump compensation pressure is set first. However:
- **be aware that if the horsepower settings are significantly out of adjustment, the motor may quickly stall or overheat, in which case, it should be shut down immediately.**
- **the pump compensation pressure and horsepower adjustments are interdependent and may need to be repeated until the specified settings are achieved.**

A3: Set 1st stage motor horsepower (amperage draw) (Section 3.5.5)

Prerequisites:
1. Pump compensation pressure already set or attempted.
2. System relief valve remains sey to maximum pressure (5000 psi).
3. Max pressure pot. bypassed (by temporarily adjusting to highest setting).
4. Ram relief pressure temporarily set to the lower, specified pressure at which 1st stage motor horsepower (amperage draw) should be set..
5. Ram up prox switch disabled and ram pressing against upper limit of travel

A4: Set 2nd stage motor horsepower (amperage draw), system relief pressure, and pre-fill pilot valve relief pressure (Section 3.5.6)

Prerequisites for all:
1. Max pressure pot. remains bypassed (adjusted to highest setting).
2. Ram relief pressure remains temporarily set to lower pressure.
3. Goods loaded in press and ram pressing against load.

Additional prerequisites for 2nd stage motor horsepower adjustment:
1. Compensator valve bypassed by setting system relief valve lower.
2. 1st stage horsepower already adjusted (because it affects 2nd stage setting).

Additional prerequisite for system relief pressure adjustment: horsepower properly adjusted.

A5: Set proportional valve maximum pressure (Section 3.5.7)

Prerequisites:
1. Goods loaded in press and ram pressing against load
2. Pump compensation pressure already adjusted
3. 1st and 2nd stage horsepower already adjusted
4. Proportional valve functioning properly

A6: Set ram relief pressure (Section 3.5.8)

Prerequisites:
1. Configured ram valve setting bypassed
2. Horsepower already adjusted (to avoid running motor above rated amperage)
3. Ram up prox switch disabled and ram pressing against upper limit of travel

A7: Set can pressure (Section 3.5.9)

Prerequisites:
1. Press empty of goods
2. Configured can valve setting bypassed
3. Can up prox switch disabled and can pressing against upper limit of travel

Done

3.5.3. Set Idle Pressure

Start the machine (①)

In a properly functioning machine, idle pressure is controlled by the idle pressure valve. However, a malfunctioning proportional valve will typically prevent the system from falling to idle pressure.

A1: **Is the pump motor energized (running)?**

- NO → **Go to B1**
- YES ↓

A2: **Adjust the idle pressure valve to 400 psi (see Table 16).**

The idle pressure valve adjustment, located on the pump, is circled at left. To adjust, loosen the locking nut then turn the adjustment screw. Observe the system pressure gauge to determine which direction to turn the screw.

A3: **Is idle pressure achievable?**

- YES → **Lock down setting. Stop machine (⓪). Go to next adjustment.**

To lock down the valve setting, tighten the locking nut.

- NO ↓

A4: **Bypass the proportional valve electrical controls by disconnecting the electrical feed to the valve. Try again to adjust the idle pressure valve.**

Unscrew and remove the proportional valve electrical connector, as shown at left. In a properly functioning system, as voltage to the proportional valve increases (from zero to 16 millivolts), the valve closes and the pump swash plate tilts away from vertical. Hence, zero voltage (open circuit) opens the valve completely, returning the swash plate to vertical and minimizing pump pressure.

A5: **Is idle pressure achievable?**

- NO → **Go to C1**
- YES ↓

A6: **Troubleshoot proportional valve controls.**

If a disconnected electrical feed achieves idle pressure, the problem is with the proportional valve controls. Refer to detailed troubleshooting elsewhere. Typical problems are:

1. Incorrect wiring between DBET card and valve.
2. Bad DBET card.

Go to A2

Part B

B1: **Troubleshoot the motor control circuitry.**

If the motor does not energize when *Start* (①) is pressed, a replacement motor or component of the motor control circuitry was improperly wired or it is bad. Refer to detailed troubleshooting elsewhere.

Go to A2

Part C

C1: **Troubleshoot the proportional valve and motor/pump.**

If a disconnected electrical feed does not achieve idle pressure, the problem is probably mechanical. Refer to detailed troubleshooting elsewhere. Some possible problems are:

1. Stuck proportional valve.
2. Motor running backwards (replacement motor improperly phased in).
3. Malfunctioning pump.

Go to A2

3.5.4. Set Pump Compensation (Full System) Pressure

Lockout/tagout power

This procedure will set the first of four components that affect full pressure:

1. **Pump pressure compensator valve**—Adjusted here.
2. **2nd stage horsepower valve**—Adjusted later, but may affect this setting.
3. **System relief valve**—Adjusted later. Bypassed here.
4. **Proportional valve max. pressure potentiometer**—Adjusted later. Bypassed here.

A1: **Bypass the proportional valve by plugging the pump port that sends oil to this valve**

The port to be plugged is circled at left. Plugging this port simulates a fully closed proportional valve (maximum pressure) and facilitates adjustment of the compensator valve. It bypasses any possible problems with the proportional valve and—because it is not necessary to pressurize the ram cylinder—it also bypasses any possible problems with the pre-fill valve and cylinder (e.g., leaking seals).

It is not necessary to plug the hose end, but tape over it for cleanliness.

A2: **Temporarily set the system relief valve to maximum (5000 psi)**

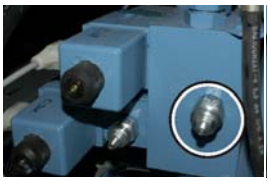

The system relief pressure adjustment is circled at left. Loosen the locking nut then turn the adjusting screw full clockwise. This sets the pressure-limiting effect of this valve far above any other adjustments it could otherwise affect.

A3: **Restore power and start machine (⊖, ①)**

The system immediately goes to full pressure without the need to press a load.

A4: **Adjust pump compensation pressure as needed to achieve specified full system pressure (see Table 16)**

The pump pressure compensator valve adjustment, located on the pump, is circled at left. To adjust, loosen the locking nut then turn the adjustment screw. Observe the system pressure gauge to determine which direction to turn the screw. See Table 16 for the specified full system pressure value.

A5: **Is full system pressure achievable?**

NO → **Continue at left, but repeat this adjustment after setting 2nd stage horsepower (Section 3.5.6)**

Observe the system pressure gauge. If full pressure is not achieved, 2nd stage horsepower may be improperly set, interfering with this setting. These inter-dependent adjustments must be repeated until the proper settings are achieved.

YES

A6: **Lock down the compensator setting**

With the compensator valve adjustment screw properly set, tighten the locking nut.

Lockout/tagout power, reconnect hose then restore power. Proceed to the next adjustment.

Leave the system relief valve set to maximum pressure for the next adjustment.

Notice 61: Troubleshooting May Be Required—The remaining adjustments will be made with proportional valve function restored and ram cylinder (or can cylinders) pressurized. The specified settings can only be achieved if the machine is otherwise, functioning properly. Some possible impediments to proper adjustment are covered herein. If you encounter a problem

not explained here, refer to detailed troubleshooting elsewhere.

3.5.5. Set 1st Stage Horsepower (amperage draw)

Power off (⊗)

A1: **Disable the ram up proximity switch**

This is the top switch on the prox switch mounting post. Disconnect the screw-type electrical connector (see at left). This permits pressure to be sustained as long as the ram is pressing against its upper mechanical limit.

A2: **Start machine (⊖, ①). Bypass the proportional valve max. pressure pot. by setting it to maximum**

The proportional valve max. pressure adjustment, located on the DBET card, is circled at left. The adjustment has no mechanical limits of rotation. To ensure the maximum value, turn the screw twenty (20) clockwise turns.

A3: **Command and maintain *Ram Up***

In *Manual* mode, raise the ram ([7], [↑]). Maintain ram up force by holding [↑] even after the ram reaches its upper mechanical limit, **and for the following adjustment, except where stated otherwise.**

A4: **Is system pressure higher than idle?**

NO → **Go to B1**

YES ↓

Observe the system pressure gauge. System pressure should be substantially higher than 400 psi (idle pressure).

A5: **While maintaining *Ram Up*, set ram relief pressure as specified for setting 1st stage horsepower (see Table 16)**

The ram relief valve adjustment is circled at left. Loosen the locking nut then turn the adjustment screw. Observe the ram relief pressure gauge (middle gauge on the gauge plate) to determine which direction to turn the screw. See Table 16 for the specified value. Re-tighten locking nut to lock down setting.

A6: **While maintaining *Ram Up*, adjust 1st stage horsepower to the motor's rated amperage (see motor and Table 16)**

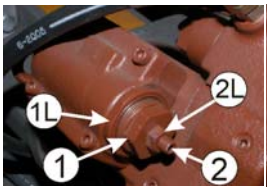

The horsepower adjustment, located on the pump, is shown at left. Loosen outermost locking nut 1L then turn adjustment nut 1. (Items 2 and 2L are for 2nd stage adjustment.) One person measures the motor amperage while the other turns the adjustment nut. Re-tighten locking nut to lock down setting.

A7: **Power off (⓪, ⊗). Restore ram up prox switch function, then restore power (⊖).**

To restore prox switch function, reconnect the switch wiring.

Leave the proportional valve max. pressure adjustment at maximum and ram relief pressure at the lower setting.

Proceed to the next adjustment

Part B

B1: **Release *Ram Up* and troubleshoot the proportional valve**

If system pressure remains at or near idle pressure, there is a problem with the proportional valve or related hardware. Some possible problems:

1. Max pressure potentiometer not set properly (to maximum)
2. Incorrect wiring between the DBET card and valve
3. Bad DBET card
4. Proportional valve stuck open

Go to A5

3.5.6. Set 2nd Stage Horsepower (amperage draw), System Relief Pressure and Pre-fill Pilot Pressure

Chart 17: Set 2nd Stage Horsepower (amperage draw), System Relief Pressure and Pre-fill Pilot Relief Pressure

Load wet goods (full load)

Machine safeties will not permit pressing without a load. If the press is not already loaded, load it now (see Section 3.5.1.2 "Be prepared to load goods."). The press must be loaded for most of the remaining procedures.

A1: **Apply and maintain pressing pressure**

In *Manual* mode, lower the ram (9 , ⬇). **Maintain pressure by holding ⬇ throughout the following adjustments, except where stated otherwise.**

A2: **Is system pressure at or near specified full pressure?**

NO → **Go to B1**

YES ↓

A3: **While pressing, bypass the pump pressure compensator valve by lowering system relief pressure to 400 psi below full pressure.**

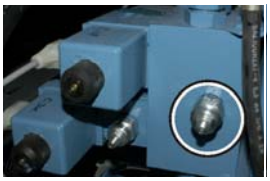

The system relief pressure adjustment, which was previously set to its highest setting, is circled at left. For example, if full pressure for your machine is 4600 psi, lower to 4200 psi (observe system pressure gauge). Turn the adjustment screw counterclockwise to lower pressure. If you overshoot, release pressure, turn clockwise, then, with pressure applied (⬇) continue turning counterclockwise.

A4: **While pressing, adjust 2nd stage horsepower to the motor's rated amperage (see motor nameplate and Table 16)**

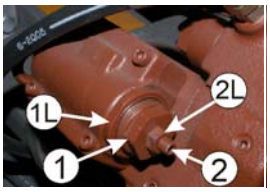

The horsepower adjustment, located on the pump, is shown at left. Loosen small locking nut 2L then turn adjustment screw 2. (Items 1 and 1L are for 1st stage adjustment.) One person measures motor amperage while the other turns the adjustment screw. Re-tighten the locking nut to lock down the setting.

A5: **With pressure released, return system relief pressure to maximum**

Release ⬇ . Loosen the system relief valve locking nut, then turn the adjustment screw full clockwise.

A6: **While pressing, lower system relief pressure just until it matches full system pressure.**

While holding ⬇ , slowly open the system pressure relief valve (turn counterclockwise) just until system pressure begins to drop, then release pressure. Remember that it is possible to open this valve (turn counterclockwise) while maintaining pressure, but not to close it.

A7: **With pressure released, set system relief pressure 1/2 CW turn above full pressure (see Table 16) and lock down.**

Release ⬇ . Turn the adjustment screw 1/2 clockwise turn (as specified in Table 16) then tighten the locking nut.

A8: **While pressing, set pre-fill pilot pressure to 2000 psi (see Table 16)**

The pre-fill pilot pressure gauge (1) and adjustment (2) are shown at left. Loosen the locking nut then turn the adjustment screw. Observe the gauge to determine which direction to turn the screw. Tighten the locking nut to lock down the setting.

Chart 17: Set 2nd Stage Horsepower (amperage draw), System Relief Pressure and Pre-fill Pilot Relief Pressure

Proceed to the next adjustment.

Leave the proportional valve max. pressure adjustment at maximum and ram relief pressure at the lower setting for the next adjustment.

Part B

B1: **Troubleshoot the ram hydraulic circuitry and components.**

If the system does not approach full pressure, refer to detailed troubleshooting elsewhere. Some possible problems are:

- Bypass valve not closing. LED on valve must be illuminated, as shown at left.
- Pre-fill valve stuck open
- Pre-fill pilot valve not functioning.
- Ram cylinder seals leaking.

Go to A3

3.5.7. Set Proportional Valve Maximum Pressure

With the machine running (①)...

Goods remain in the machine from the previous procedure. Machine safeties will not permit pressing without a load. Also, the proportional valve max. pressure adjustment remains at maximum and ram relief pressure at the lower setting, from previous procedures.

A1: **Apply and maintain pressing pressure.**

In *Manual* mode, lower the ram (9, ⬇). **Maintain pressure by holding ⬇ throughout the following adjustment, except where stated otherwise.**

A2: **Lower proportional valve max. pressure just until it matches full system pressure (see Table 16).**

Previously, the max. pressure pot, circled at left, was adjusted to its highest setting. Carefully turn the adjustment screw counterclockwise just until system pressure begins falling below full pressure (see Table 16 for the specified value).

A3: **Does max. pressure pot respond to adjustment?**

YES → **Stop machine (⓪). Go to next adjustment.**

Leave the ram relief pressure at the lower setting for the next adjustment.

NO ↓

A4: **Look for 16 millivolts across proportional valve coil**

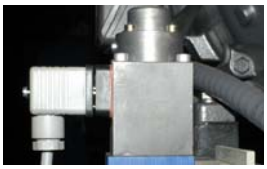

Separate the electrical connector from the valve, as shown at left, just enough to provide a gap for the voltmeter leads. **Reading must be taken with the coil in the circuit.** Read the voltage across the left and right prongs.

A5: **Is the proper voltage achievable?**

NO → **Go to B1**

YES ↓ **Go to C1**

Part B

B1: **Troubleshoot valve electrical controls.**

If you cannot achieve 16 millivolts across the coil, the problem is electrical. Refer to detailed troubleshooting elsewhere. Some possible problems:

- Faulty wiring between the DBET card and the valve.
- Bad DBET card

Go to A3

Part C

C1: **Troubleshoot proportional valve.**

If you read 16 millivolts across the coil, the problem is mechanical. Refer to detailed troubleshooting elsewhere. Some possible problems:

- Proportional valve seals leaking.
- Proportional valve stuck open.

Go to A3

3.5.8. Set Ram Relief Pressure

Notice 62: Goods remain in the machine from the previous procedure. These are not needed for the remaining adjustments and may be removed. However, if this procedure is being done in the field, leave the goods in the machine for this adjustment.

Chart 19: Set Ram Relief Pressure

Power off (⊗)

The ram relief pressure adjustment may be performed with goods in the machine or with the machine empty.

A1: **Disable the ram up proximity switch**

This permits pressure to be sustained as long as the ram is pressing against its upper mechanical limit of travel. The ram up prox switch is the top switch on the prox switch mounting plate. Disconnect the screw-type electrical connector, as shown at left.

A2: **Restore power (⊗). Record, then bypass the can and ram valve configure values by temporarily setting them to 4095 (maximum)**

In *CONFIGURE* (this is selection 3 on the *Program* menu—see reference manual), go to the *CAN VALVE SETTING* decision, **write down its current value,** then change the value to 4095 (maximum = fully open). Do the same for the *RAM VALVE SETTING* decision. These will be returned to their previous values at the completion of the adjustments. This change bypasses these settings when making the following adjustments. In normal operation, the configure values control how fast the can or ram travels.

A3: **Start machine (⊗). Command and maintain Ram Up**

In *Manual* mode, raise the ram (7, ↑). Maintain ram up force by holding ↑ even after the ram reaches its upper mechanical limit, **and for the following adjustment.**

A4: **While maintaining Ram Up, adjust ram relief pressure to 1200 psi (see Table 16)**

The ram relief pressure adjustment is circled at left. Loosen the ram relief valve locking nut then turn the adjustment screw. Previously, this component was set to a lower pressure and will probably need to be raised, but observe the ram relief pressure gauge (middle gauge) to determine which direction to turn the screw. Re-tighten the locking nut to lock down the setting.

A5: **Power off (⊗, ⊗), restore ram up prox switch function, then restore power (⊗).**

To restore prox switch function, reconnect the switch wiring.

Proceed to the next adjustment

Leave the can and ram valve configure values at their temporary settings.

3.5.9. Set Can Pressure

CAUTION 63: Risk of damage to machine or goods—This adjustment will be done with the can up. If goods remain in the machine, this will not prevent the can from being raised in *Manual* mode, but damage may occur when the can is lowered again.

- Place the machine on-line so that the machine can complete processing of this load. When this load is discharged from the press and before the next load enters, take the machine off-line (return to *Manual* mode) and perform the last adjustment, which follows.
- Never manually lower the can onto a load of goods.

Chart 20: Set Can Pressure

Power off (⊗)

The can pressure adjustment should be performed with the machine empty of goods.

A1: **Disable the can up proximity switch**

The can up prox switch, located adjacent to one of the can cylinders, is shown at left. The prox switches have screw-type electrical connectors. Unscrew the connector. This permits pressure to be sustained as long as the the can is pressing against its upper mechanical limit of travel.

A2: **Restore power and start machine (⊗, ①). Command and maintain *Can Up***

In *Manual* mode, raise the can (3, ⬆). Maintain can up force by holding ⬆ even after the can reaches its upper mechanical limit, **and for the following adjustment.**

A3: **Adjust can pressure to 800 psi (see Table 16)**

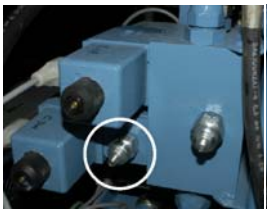

The can pressure valve adjustment is circled at left. Loosen the locking nut then turn the adjustment screw. Observe the can relief pressure gauge (bottom gauge) to determine which direction to turn the screw. Re-tighten the locking nut to lock down the setting.

A4: **Stop the machine and power off (⓪, ⊗). Restore can up prox switch function, then restore power (⊗).**

To restore prox switch function, reconnect the switch wiring.

A5: **Restore the can and ram valve configure values to their previous settings.**

In *Configuration* return the *CAN VALVE SETTING* and *RAM VALVE SETTING* configure decisions to their previous values (the values you wrote down).

If this procedure is being performed in the field, the machine may now be placed on-line (returned to normal, automatic operation).

Done

— End of BIPPMT02 —

Part 2

Mechanical Parts and Repair Procedures

A table of contents follows this page.
Locate information by page number.

BMP060041/2006324A

PELLERIN MILNOR CORPORATION
LIMITED STANDARD WARRANTY

We warrant to the original purchaser that MILNOR machines including electronic hardware/software (hereafter referred to as "equipment"), will be free from defects in material and workmanship for a period of one year from the date of shipment (unless the time period is specifically extended for certain parts pursuant to a specific MILNOR published extended warranty) from our factory with no operating hour limitation. This warranty is contingent upon the equipment being installed, operated and serviced as specified in the operating manual supplied with the equipment, and operated under normal conditions by competent operators.

Providing we receive written notification of a warranted defect within 30 days of its discovery, we will—at our option—repair or replace the defective part or parts, EX Factory (labor and freight specifically NOT included). We retain the right to require inspection of the parts claimed defective in our factory prior to repairing or replacing same. We will not be responsible, or in any way liable, for unauthorized repairs or service to our equipment, and this warranty shall be void if the equipment is tampered with, modified, or abused, used for purposes not intended in the design and construction of the machine, or is repaired or altered in any way without MILNOR's written consent.

Parts damaged by exposure to weather, to aggressive water, or to chemical attack are not covered by this warranty. For parts which require routine replacement due to normal wear—such as gaskets, contact points, brake and clutch linings, belts, hoses, and similar parts—the warranty time period is 90 days.

We reserve the right to make changes in the design and/or construction of our equipment (including purchased components) without obligation to change any equipment previously supplied.

ANY SALE OR FURNISHING OF ANY EQUIPMENT BY MILNOR IS MADE ONLY UPON THE EXPRESS UNDERSTANDING THAT MILNOR MAKES NO EXPRESSED OR IMPLIED WARRANTIES OF MERCHANTABILITY OR FITNESS FOR ANY PARTICULAR USE OR PURPOSE OR ANY OTHER WARRANTY IMPLIED BY LAW INCLUDING BUT NOT LIMITED TO REDHIBITION. MILNOR WILL NOT BE RESPONSIBLE FOR ANY COSTS OR DAMAGES ACTUALLY INCURRED OR REQUIRED AS A RESULT OF: THE FAILURE OF ANY OTHER PERSON OR ENTITY TO PERFORM ITS RESPONSIBILITIES, FIRE OR OTHER HAZARD, ACCIDENT, IMPROPER STORAGE, MIS-USE, NEGLECT, POWER OR ENVIRONMENTAL CONTROL MALFUNCTIONS, DAMAGE FROM LIQUIDS, OR ANY OTHER CAUSE BEYOND THE NORMAL RANGE OF USE. REGARDLESS OF HOW CAUSED, IN NO EVENT SHALL MILNOR BE LIABLE FOR SPECIAL, INDIRECT, PUNITIVE, LIQUIDATED, OR CONSEQUENTIAL COSTS OR DAMAGES, OR ANY COSTS OR DAMAGES WHATSOEVER WHICH EXCEED THE PRICE PAID TO MILNOR FOR THE EQUIPMENT IT SELLS OR FURNISHES.

THE PROVISIONS ON THIS PAGE REPRESENT THE ONLY WARRANTY FROM MILNOR AND NO OTHER WARRANTY OR CONDITIONS, STATUTORY OR OTHERWISE, SHALL BE IMPLIED.

WE NEITHER ASSUME, NOR AUTHORIZE ANY EMPLOYEE OR OTHER PERSON TO ASSUME FOR US, ANY OTHER RESPONSIBILITY AND/OR LIABILITY IN CONNECTION WITH THE SALE OR FURNISHING OF OUR EQUIPMENT TO ANY BUYER.

BMP720097/19036

BIUUUD19 (Published) Book specs- Dates: 20081231 / 20081231 / 20081231 Lang: ENG01 Applic: UUU

How to Get the Necessary Repair Components

This document uses Simplified Technical English.
Learn more at http://www.asd-ste100.org.

You can get components to repair your machine from the approved supplier where you got this machine. Your supplier will usually have the necessary components in stock. You can also get components from the Milnor® factory.

Tell the supplier the machine model and serial number and this data for each necessary component:

- The component number from this manual
- The component name if known
- The necessary quantity
- The necessary transportation requirements
- If the component is an electrical component, give the schematic number if known.
- If the component is a motor or an electrical control, give the nameplate data from the used component.

To write to the Milnor factory:

Pellerin Milnor Corporation
Post Office Box 400
Kenner, LA 70063-0400
UNITED STATES

Telephone: 504-467-2787
Fax: 504-469-9777
Email: parts@milnor.com

— End of BIUUUD19 —

BIUUUI02PP (Published) Book specs- Dates: 20170824 / 20170824 / 20170824 Lang: ENG01 Applic: PPM

Tag Guidelines for the Models Listed Below

MP1540CL	MP1540CR	MP1540L-	MP1540R-	MP1550CL	MP1550CR	MP1550L-
MP1550R-	MP1556CL	MP1556CR	MP1556L-	MP1556R-	MP1601CL	MP1601CR
MP1601LF	MP1601R-	MP1601RT	MP1602CL	MP1602CR	MP1602LF	MP1602RT
MP1603CL	MP1603CR	MP1603L-	MP1603R-	MP1604CL	MP1604CR	MP1604L-
MP1604R-	MP1640CL	MP1640CR	MP1640L-	MP1640R-	MP1656CL	MP1656CR
MP1656L-	MP1656R-	MP1A03CL	MP1A03CR	MP1A03L-	MP1A03R-	MP1A50CL
MP1A50CR	MP1A50L-	MP1A50R-	MP1A56CL	MP1A56CR	MP1A56L-	MP1A56R-

Notice 1: This information may apply to models in addition to those listed above. It applies to paper tags. It does not apply to the vinyl or metal safety placards, which must remain permanently affixed to the machine and replaced if no longer readable.

Paper tags on the machine provide installation guidelines and precautions. The tags can be tie-on or adhesive. You can remove tie-on tags and white, adhesive tags after installation. Yellow adhesive tags must remain on the machine.

The following entries explain the installation tags. Each entry includes: 1) the tag illustration, 2) the tag part number displayed st the bottom of the tag, and 3) the meaning of the tag.

Display or Action	Explanation
	Read the manuals before proceeding. This symbol appears on most tags. The machine ships with safety, operator, and routine maintenance guides for customer use. Milnor dealer manuals for installing, servicing, and commissioning this machine are also available from the Milnor Parts department.
	B2TAG88005: This carefully built product was tested and inspected to meet Milnor® performance and quality standards by (identification mark of tester).
	B2TAG94078: Do not forklift here; do not jack here; do not step here—whichever applies.
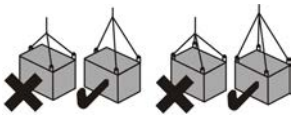	B2TAG94079: Rig for crane lifting (either 3-point or 4-point, depending on the number of lifting eyes provided) using a steep angle on the chains (closer to vertical than horizontal).
	B2TAG94081: Motor must rotate in this direction. On single motor washer-extractors and centrifugal extractors, the drive motor must turn in this direction during draining and extraction. This tag is usually wrapped around a motor housing. If the motor turns in the opposite direction when the machine is first tested, the electrical hookup is incorrect and must be reversed as explained in the schematic manual.
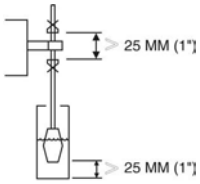	B2TAG94082: Maintain a 25 millimeter (1") minimum clearance between level float clips. Set low level so that the bottom of the float is always at least 25 millimeters (1") above the bottom of the float tube.
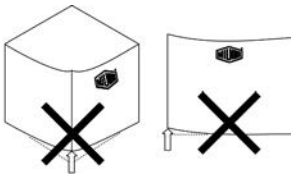	B2TAG94084: Do not lift from one corner of the machine, as this can cause the frame to rack, damaging it.

Display or Action	Explanation
	B2TAG94102 shown—others similar: Match up the components with this number. These tags are used to pair up electrical or hose connections between major components of a machine shipped dis-assembled.
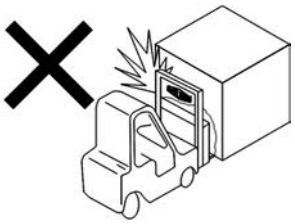	B2TAG94118: Do not strike shipping container during fork-lifting. Fragile components inside.
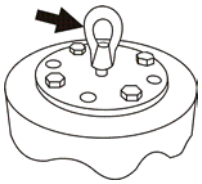	B2TAG98037: Read the installation instructions. Do not attempt to lift the machine with this component. Do not remove this component unless the ram cylinder is mounted to the top plate, the ram is raised fully **and the platen safety bars are installed**. Use this component to raise the ram cylinder for mounting, during installation.
35 - 40 psi 241316 - 275790 Pa (N/m²) 	B2TAG98039: Verify that discharge door pressure is within the range shown.
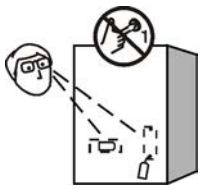	B2T2001028: Look for tags inside the machine. These tags may identify shipping restraints to be removed or components to be installed. Do not start the machine until these actions are completed.
  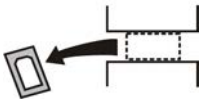	B2T2002013: Do not start the machine until shipping restraints are removed. This tag will appear on the outside of the machine to alert you to the presence of internal shipping restraints. A tag will also appear on the restraint to help identify it. Most, but not all shipping restraints display the color red. Some shipping restraints are also safety stands. Do not discard these.

Display or Action	Explanation
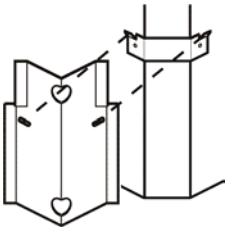	B2T2002016: Store safety stands as shown when not in use.
	B2T2003014: Make sure that you use the specified hydraulic oil.
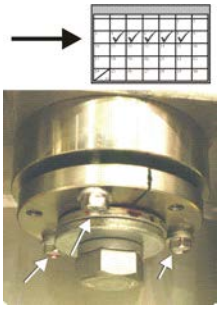	B2T2004028: Read the service instructions. Retighten the can bushing bolts to the torque shown after each of the first five days of operation following installation.
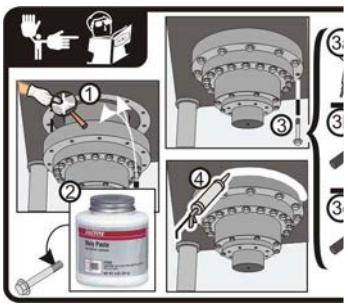	B2T2007017: Read the installation instructions. When mounting the ram, use LocTite moly paste on mounting surfaces. Torque the bolts three times as shown.
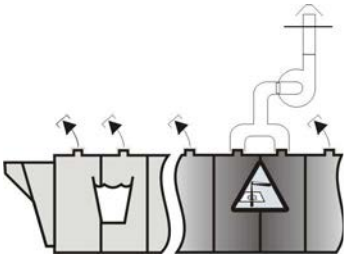	B2T2008001: Read the installation instructions. Remove temporary vent covers. Install a powered vent unit on the oxidation zone modules and a separate powered vent unit on the finish zone module and adjacent press, if there is one.
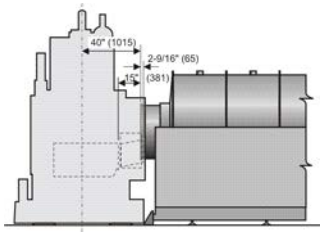	B2T2008006: When installing a G3 CBW tunnel washer behind a 1-stage press, maintain the dimensions shown.

Display or Action	Explanation
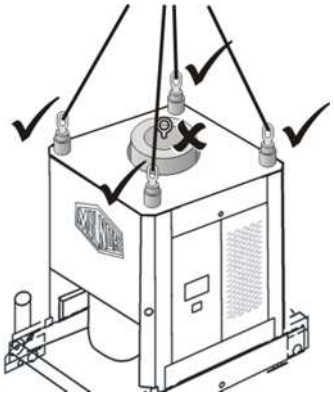	B2T2009017: Lift the press frame from the eye bolts on the four columns. Never attempt to lift the press from the eye bolt on top of the ram cylinder. This eye bolt is used to raise the ram into position.
	B2T2010023: Set the press frame in accordance with this instruction and the installation manual.
	B2T2011015: Attach hydraulic components as explained. This procedure is critical.
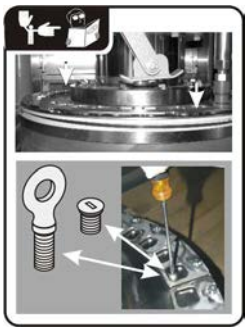	B2T2012012: When you remove the safety bar eye bolts for automatic operation, install the O-ring plugs fully in the two threaded holes.
	B2T2016041: Find pressure gauge instructions here.

Display or Action	Explanation
	B2T2017010: All hydraulic oil added to the 1-station press must be passed through a 10 micron filter.

— End of BIUUUI02 —

Safety Placard Use and Placement

Mp15xx, MP16xx, MPL5xx, MPL6xx, MP1Axx

BMP040036/2020275B
(Sheet 1 of 2)

Pellerin Milnor Corporation
P. O. Box 400, Kenner, LA 70063-0400

Litho in U.S.A.

Notes:
1. **Replace placard immediately, if removed or unreadable.**
2. **Approximate locations of placards are shown. Mounting holes are provided on machine. If aluminum placard use #8 self-tapping screws.**

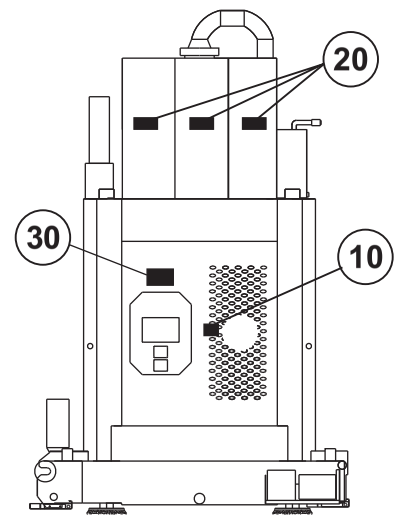

REAR VIEW

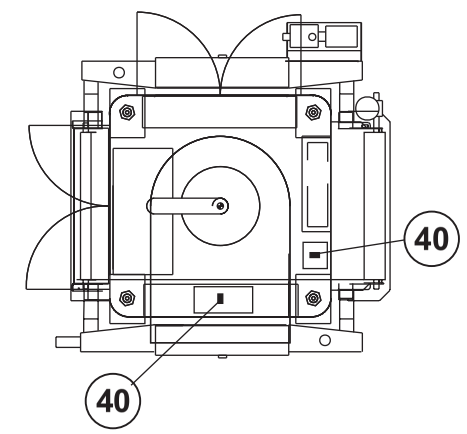

PLAN VIEW

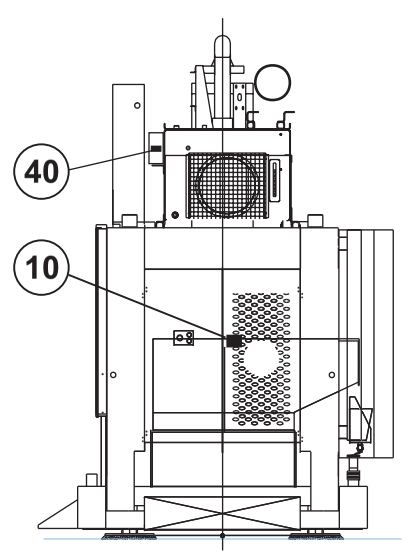

LEFT VIEW

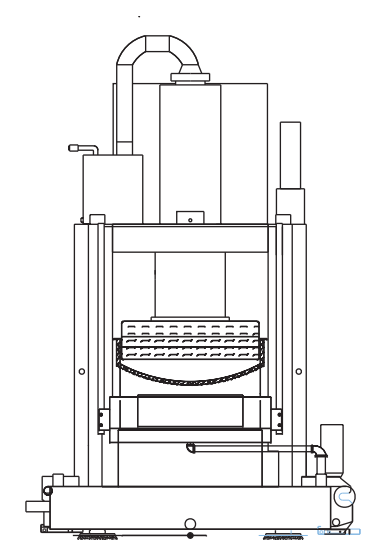

FRONT VIEW

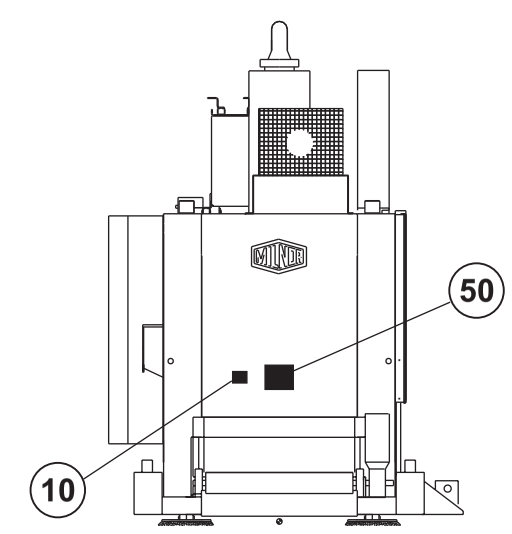

RIGHT VIEW

Safety Placard Use and Placement

Mp15xx, MP16xx, MPL5xx, MPL6xx, MP1Axx

BMP040036/2020275B
(Sheet 2 of 2)

Pellerin Milnor Corporation
P. O. Box 400, Kenner, LA 70063-0400

Litho in U.S.A.

Parts List—Safety Placard Placement

Find the correct assembly first, then find the needed components. The item letters (A, B, C, etc.) assigned to assemblies are referred to in the "Used In" column to identify which components belong to an assembly. The item numbers (1, 2, 3, etc.) assigned to components relate the parts list to the illustration.

Used In	Item	Part Number	Description	Comments
			----------COMPONENTS----------	
all	10	01 10668A	NPLT:PRESS DOOR HAZARD-TCATA	
all	20	01 10377A	NPLT:ELEC HAZARD LG-TCATA	
all	30	01 10699A	NPLT:SERV HZRD-PLYEST-TCATA	
all	40	01 10375B	NPLT:ELEC HAZARD SMALL-TCATA	
all	50	01 10634A	NPLT:CONVEYOR HAZARDS-TCATA	

Safety Placard Use and Placement ISO

MP15xx, MP16xx, MPL5xx, MPL6xx, MP1Axx

Pellerin Milnor Corporation
P. O. Box 400, Kenner, LA 70063-0400

Litho in U.S.A.

ISO Placards shown on this page

Notes:

1. **Replace placard immediately, if removed or unreadable.**
2. **Approximate locations of placards are shown. Mounting holes are provided on machine. If aluminum placard use #8 self-tapping screws.**

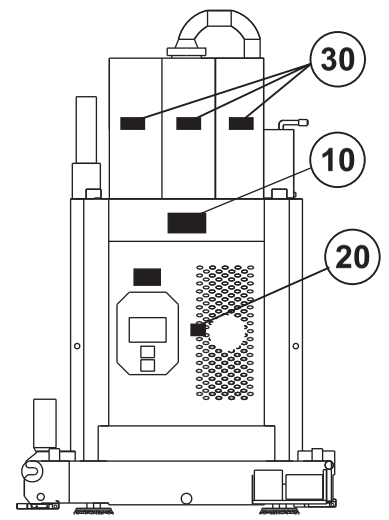

REAR VIEW

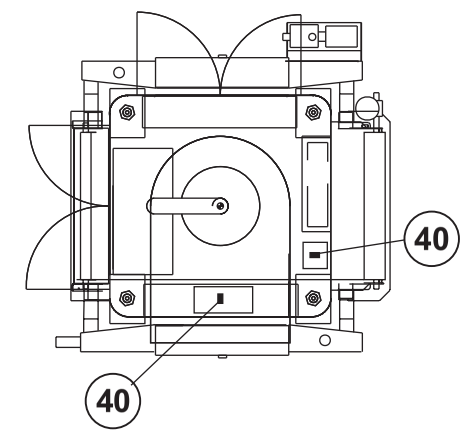

PLAN VIEW

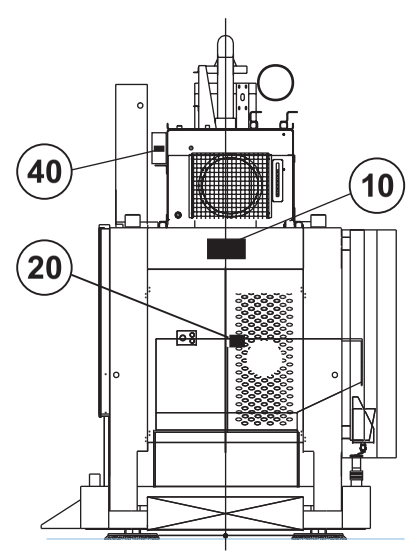

LEFT VIEW

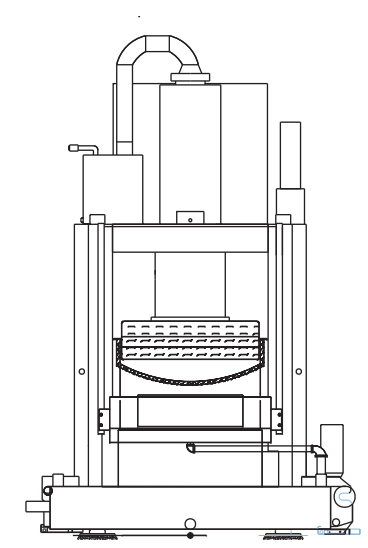

FRONT VIEW

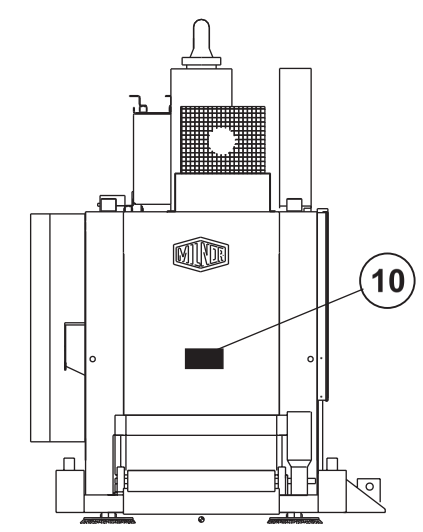

RIGHT VIEW

Safety Placard Use and Placement ISO

BMP040037/2020275B
(Sheet 2 of 2)

Pellerin Milnor Corporation
P. O. Box 400, Kenner, LA 70063-0400

Litho in U.S.A.

Parts List—Safety Placard Placement

Find the correct assembly first, then find the needed components. The item letters (A, B, C, etc.) assigned to assemblies are referred to in the "Used In" column to identify which components belong to an assembly. The item numbers (1, 2, 3, etc.) assigned to components relate the parts list to the illustration.

Used In	Item	Part Number	Description	Comments
			----------COMPONENTS----------	
all	10	01 10668X	NPLT:S.S.PRESS WARNINGS-ISO	
all	20	01 10577X	NPLT:PRESS WRNG CRUSHING-ISO	
all	30	01 10377	NPLTE:"WARNING" 4X4	
all	40	01 10375	NPLTE:"WARNING" 2X2	

BIUUUM04 (Published) Book specs- Dates: 20180109 / 20180109 / 20180109 Lang: ENG01 Applic: UUU

Torque Requirements for Fasteners

This document uses Simplified Technical English. Learn more at http://www.asd-ste100.org.

The document about the assembly gives the torque requirements for other fasteners. **If fastener torque specifications or threadlocker requirements in an assembly document are different from this document, use the assembly document.**

Figure 1: The Bolts in Milnor® Equipment

The Marks on Bolt Heads	Legend
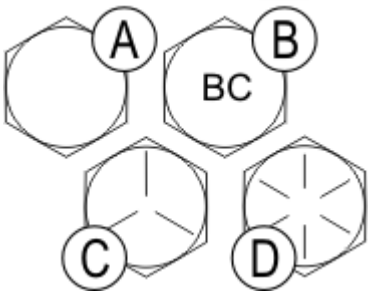	**A.** SAE Grades 1 and 2, ASTM A307, and stainless steel **B.** Grade BC, ASTM A354 **C.** SAE Grade 5, ASTM A449 **D.** SAE Grade 8 and ASTM A354 BD

1. Torque Values

These tables give the standard dimension, grade, threadlocker, and torque requirements for fasteners frequently used on Milnor® equipment.

Note 1: Data from the Pellerin Milnor® Corporation "Bolt Torque Specification" (bolt_torque_milnor.xls/2002096).

1.1. Fasteners Made of Carbon Steel

1.1.1. Without a Threadlocker

Table 1: Torque Values for Standard Fasteners with Maximum 5/16-inch Diameters and No Lubricant

	The Grade of the Bolt							
	Grade 2		Grade 5		Grade 8		Grade BC	
Dimension	**Pound-Inches**	**N-m**	**Pound-Inches**	**N-m**	**Pound-Inches**	**N-m**	**Pound-Inches**	**N-m**
1/4 x 20	66	7	101	11	143	16	126	14
1/4 x 28	76	9	116	13	163	18	--	--
5/16 x 18	136	15	209	24	295	33	258	29
5/16 x 24	150	17	232	26	325	37	--	--

Table 2: Torque Values for Standard Fasteners Larger Than 5/16-inch Diameters and No Lubricant

	The Grade of the Bolt							
	Grade 2		Grade 5		Grade 8		Grade BC	
Dimension	Pound-feet	N-m	Pound-feet	N-m	Pound-feet	N-m	Pound-feet	N-m
3/8 x 16	20	27	31	42	44	59	38	52
3/8 x 24	23	31	35	47	50	68	--	--
7/16 x 14	32	43	49	66	70	95	61	83
7/16 x 20	36	49	55	75	78	105	--	--
1/2 x 13	49	66	75	102	107	145	93	126
1/2 x 20	55	75	85	115	120	163	--	--
9/16 x 12	70	95	109	148	154	209	134	182
9/16 x 18	78	106	121	164	171	232	--	--
5/8 x 11	97	131	150	203	212	287	186	252
5/8 x 18	110	149	170	231	240	325	--	--
3/4 x 10	172	233	266	361	376	510	329	446
3/14 x 16	192	261	297	403	420	569	--	--
7/8 x 9	167	226	429	582	606	821	531	719
7/8 x 14	184	249	473	641	668	906	--	--
1 x 8	250	339	644	873	909	1232	796	1079
1 x 12	274	371	704	954	994	1348	--	--
1 x 14	281	381	723	980	1020	1383	--	--
1 1/8 x 7	354	480	794	1077	1287	1745	1126	1527
1 1/8 x 12	397	538	891	1208	1444	1958	--	--
1 1/4 x 7	500	678	1120	1519	1817	2464	1590	2155
1 1/4 x 12	553	750	1241	1682	2012	2728	--	--
1 3/8 x 6	655	888	1469	1992	2382	3230	2085	2827
1 3/8 x 12	746	1011	1672	2267	2712	3677	--	--
1 1/2 x 6	869	1178	1949	2642	3161	4286	2767	3751
1 1/2 x 12	979	1327	2194	2974	3557	4822	--	--

Table 3: Torque Values for Plated Fasteners with Maximum 5/16-inch Diameters and No Lubricant

	The Grade of the Bolt							
	Grade 2		Grade 5		Grade 8		Grade BC	
Dimension	Pound-Inches	N-m	Pound-Inches	N-m	Pound-Inches	N-m	Pound-Inches	N-m
1/4 x 20	49	6	76	9	107	12	95	11
1/4 x 28	56	6	88	10	122	14	--	--
5/16 x 18	102	12	156	18	222	25	193	22
5/16 x 24	113	13	174	20	245	28	--	--

Table 4: Torque Values for Plated Fasteners Larger Than 5/16-inch Diameters and No Lubricant

	The Grade of the Bolt							
	Grade 2		Grade 5		Grade 8		Grade BC	
Dimension	Pound-feet	N-m	Pound-feet	N-m	Pound-feet	N-m	Pound-feet	N-m
3/8 x 16	15	20	23	31	33	44	29	38
3/8 x 24	17	23	26	35	37	49	--	--
7/16 x 14	24	32	37	50	52	71	46	61
7/16 x 20	27	36	41	55	58	78	--	--
1/2 x 13	37	49	56	76	80	106	70	93
1/2 x 20	41	55	64	85	90	120	--	--
9/16 x 12	53	70	81	110	115	153	101	134
9/16 x 18	59	79	91	122	128	174	--	--
5/8 x 11	73	97	113	150	159	212	139	186
5/8 x 18	83	110	127	172	180	240	--	--
3/4 x 10	129	173	200	266	282	376	246	329
3/14 x 16	144	192	223	297	315	420	--	--
7/8 x 9	125	166	322	430	455	606	398	531
7/8 x 14	138	184	355	474	501	668	--	--
1 x 8	188	250	483	644	682	909	597	796
1 x 12	205	274	528	716	746	995	--	--
1 x 14	210	280	542	735	765	1037	--	--
1 1/8 x 7	266	354	595	807	966	1288	845	1126
1 1/8 x 12	298	404	668	890	1083	1444	--	--
1 1/4 x 7	375	500	840	1120	1363	1817	1192	1590
1 1/4 x 12	415	553	930	1261	1509	2013	--	--
1 3/8 x 6	491	655	1102	1470	1787	2382	1564	2085
1 3/8 x 12	559	758	1254	1672	2034	2712	--	--
1 1/2 x 6	652	870	1462	1982	2371	3161	2075	2767
1 1/2 x 12	733	994	1645	2194	2668	3557	--	--

1.1.2. With a Threadlocker

Table 5: Threadlocker by the Diameter of the Bolt (see Note 2)

	Dimension			
LocTite Product	1/4-inch	1/4- to 5/8-inch	5/8- to 7/8-inch	1-inch +
LocTite 222	OK			
LocTite 242		OK		
LocTite 262			OK	
LocTite 272			High temperature	
LocTite 277				OK

Note 2: The acceptable bolt size ranges for various LocTite® threadlocking products is the LocTite manufacturer's **general** recommendation. Specific applications sometime require that a LocTite product is applied to a bolt size outside the ranges shown here. For example, Milnor specifies LocTite 242 for use on certain 1" bolt applications and has confirmed this usage with the LocTite manufacturer. You may see variances such as this in the documentation for specific machine assemblies.

Table 6: Torque Values if You Apply LocTite 222

Dimension	The Grade of the Bolt							
	Grade 2		Grade 5		Grade 8		Grade BC	
	Pound-inches	N-m	Pound-inches	N-m	Pound-inches	N-m	Pound-inches	N-m
1/4 x 20	60	7	96	11	132	15	108	12
1/4 x 28	72	8	108	12	144	16	--	--

Table 7: Torque Values if You Apply LocTite 242

Dimension	The Grade of the Bolt							
	Grade 2		Grade 5		Grade 8		Grade BC	
	Pound-feet	N-m	Pound-feet	N-m	Pound-feet	N-m	Pound-feet	N-m
5/16 x 18	11	15	17	23	25	34	22	30
5/16 x 24	13	18	19	26	27	37	27	37
3/8 x 16	20	27	31	42	44	60	38	52
3/8 x 24	23	31	35	47	50	68	--	--
7/16 x 14	32	43	49	66	70	95	61	83
7/16 x 20	36	49	55	75	78	106	--	--
1/2 x 13	49	66	75	102	107	145	93	126
1/2 x 20	55	75	85	115	120	163	--	--
9/16 x 12	70	95	109	148	154	209	134	182
9/16 x 18	78	106	121	164	171	232	--	--
5/8 x 11	97	132	150	203	212	287	186	252
5/8 x 18	110	149	170	230	240	325	--	--

Table 8: Torque Values if You Apply LocTite 262

Dimension	The Grade of the Bolt							
	Grade 2		Grade 5		Grade 8		Grade BC	
	Pound-feet	N-m	Pound-feet	N-m	Pound-feet	N-m	Pound-feet	N-m
3/4 x 10	155	210	240	325	338	458	296	401
3/4 x 16	173	235	267	362	378	512	--	--
7/8 x 9	150	203	386	523	546	740	477	647
7/8 x 14	165	224	426	578	601	815	--	--

Table 9: Torque Values if You Apply LocTite 272 (High-Temperature)

	The Grade of the Bolt							
	Grade 2		Grade 5		Grade 8		Grade BC	
Dimension	Pound-feet	N-m	Pound-feet	N-m	Pound-feet	N-m	Pound-feet	N-m
1 x 8	350	475	901	1222	1272	1725	1114	1510
1 x 12	383	519	986	1337	1392	1887	--	--
1 x 14	393	533	1012	1372	1428	1936	--	--
1-1/8 x 7	496	672	1111	1506	1802	2443	1577	2138
1-1/8 x 12	556	754	1247	1691	2022	2741	--	--
1-1/4 x 7	700	949	1568	2126	2544	3449	2226	3018
1-1/4 x 12	774	1049	1737	2355	2816	3818	--	--
1-3/8 x 6	917	1243	2056	2788	3335	4522	2919	3958
1-3/8 x 12	1044	1415	2341	3174	3797	5148	--	--
1-1/2 x 6	1217	1650	2729	3700	4426	6001	3873	5251
1-1/2 x 12	1369	1856	3071	4164	4980	6752	--	--

Table 10: Torque Values if You Apply LocTite 277

	The Grade of the Bolt							
	Grade 2		Grade 5		Grade 8		Grade BC	
Dimension	Pound-feet	N-m	Pound-feet	N-m	Pound-feet	N-m	Pound-feet	N-m
1 x 8	325	441	837	1135	1181	1601	1034	1402
1 x 12	356	483	916	1242	1293	1753	--	--
1 x 14	365	495	939	1273	1326	1798	--	--
1-1/8 x 7	461	625	1032	1399	1674	2270	1464	1985
1-1/8 x 12	516	700	1158	1570	1877	2545	--	--
1-1/4 x 7	650	881	1456	1974	2362	3202	2067	2802
1-1/4 x 12	719	975	1613	2187	2615	3545	--	--
1-3/8 x 6	851	1154	1909	2588	3097	4199	2710	3674
1-3/8 x 12	970	1315	2174	2948	3526	4781	--	--
1-1/2 x 6	1130	1532	2534	3436	4110	5572	3597	4877
1-1/2 x 12	1271	1723	2852	3867	4624	6269	--	--

1.2. Stainless Steel Fasteners

Table 11: Torque Values for Stainless Steel Fasteners 5/16-inch and Smaller

	316 Stainless		18-8 Stainless		18-8 Stainless with Loctite 767	
Dimension	Pound-Inches	N-m	Pound-Inches	N-m	Pound-Inches	N-m
1/4 x 20	79	9	76	9	45	5
1/4 x 28	100	11	94	11	56	6
5/16 x 18	138	16	132	15	79	9
5/16 x 24	148	17	142	16	85	10

Table 12: Torque Values for Stainless Steel Fasteners Larger Than 5/16-inch

Dimension	316 Stainless		18-8 Stainless		18-8 Stainless with Loctite 767	
	Pound-feet	N-m	Pound-feet	N-m	Pound-feet	N-m
3/8 x 16	21	28	20	27	12	16
3/8 x 24	23	31	22	29	13	18
7/16 x 14	33	44	31	42	19	25
7/16 x 20	35	47	33	45	20	27
1/2 x 13	45	61	43	58	26	35
1/2 x 20	47	64	45	61	27	37
9/16 x 12	59	81	57	77	34	46
9/16 x 18	66	89	63	85	38	51
5/8 x 11	97	131	93	125	56	75
5/8 x 18	108	150	104	141	62	84
3/4 x 10	132	179	128	173	77	104
3/4 x 16	130	176	124	168	75	101
7/8 x 9	203	275	194	263	116	158
7/8 x 14	202	273	193	262	116	157
1 x 8	300	406	287	389	172	233
1 x 14	271	367	259	351	156	211
1-1/8 x 7	432	586	413	560	248	336
1-1/8 x 12	408	553	390	529	234	317
1-1/4 x 7	546	740	523	709	314	425
1-1/4 x 12	504	683	480	651	288	390
1-1/2 x 6	930	1261	888	1204	533	722
1-1/2 x 12	732	992	703	953	422	572

2. Preparation

WARNING 2: Fire Hazard—Some solvents and primers are flammable.

- Use threadlocker and primers with sufficient airflow.
- Do not use flammable material near ignition sources.

1. Clean all threads with a wire brush or a different tool.
2. Remove the grease from the fasteners and the mating threads with solvent. Make the parts dry.

   Note 3: LocTite 7649 Primer™ or standard solvents will remove grease from parts.

3. Apply a spray of LocTite 7649 Primer™ or equal on the fasteners and the mating threads. Let the primer dry for one minute minimum.

3. How to Apply a Threadlocker

CAUTION 3: Malfunction Hazard—Heat, vibration, or mechanical shocks can let the fasteners loosen if you do not apply the threadlocker correctly. Loose fasteners can cause malfunctions of the equipment.

- Read the threadlocker manufacturer's instructions and warnings. Obey these instructions.

Apply the threadlocker only to the areas where the fastener threads and the mating threads engage.

Figure 2: Blind Hole

Application	Coverage
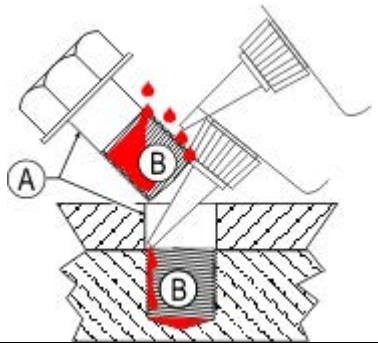	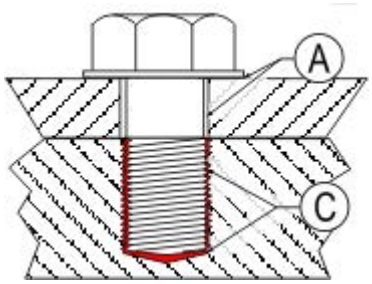

Legend

A. No threadlocker here
B. Apply here
C. Fill all space with threadlocker

3.1. Blind Holes

1. Apply the threadlocker down the threads to the bottom of the hole.
2. Apply the threadlocker to the bolt.
3. Tighten the bolt to the value shown in the correct table (Table 5 to Table 11).

3.2. Through Holes

1. Put the bolt through the assembly.
2. Apply the threadlocker only to the bolt thread area that will engage the nut.
3. Tighten the bolt to the value shown in the correct table (Table 5 to Table 11).

Figure 3: Through Hole

Application	Legend
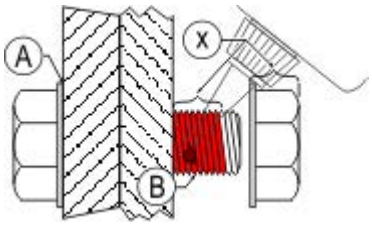	**A.** No threadlocker here **B.** Apply the threadlocker to this area **x.** Nut depth

3.3. Disassembly—For high-strength threadlocker, apply heat for five minutes. Disassemble with hand tools while the parts are hot.

For low-strength and moderate-strength threadlocker, disassemble with hand tools.

Figure 4: Disassembly

Apply Heat to a Small Area	Legend
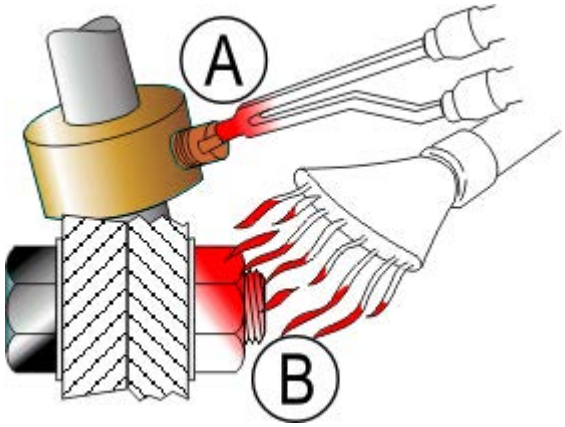	**A.** How to apply heat to a small fastener **B.** How to apply heat to a large fastener

— End of BIUUUM04 —

Housing Assemblies 1

Pellerin Milnor Corporation
P. O. Box 400, Kenner, LA 70063-0400

Litho in U.S.A.

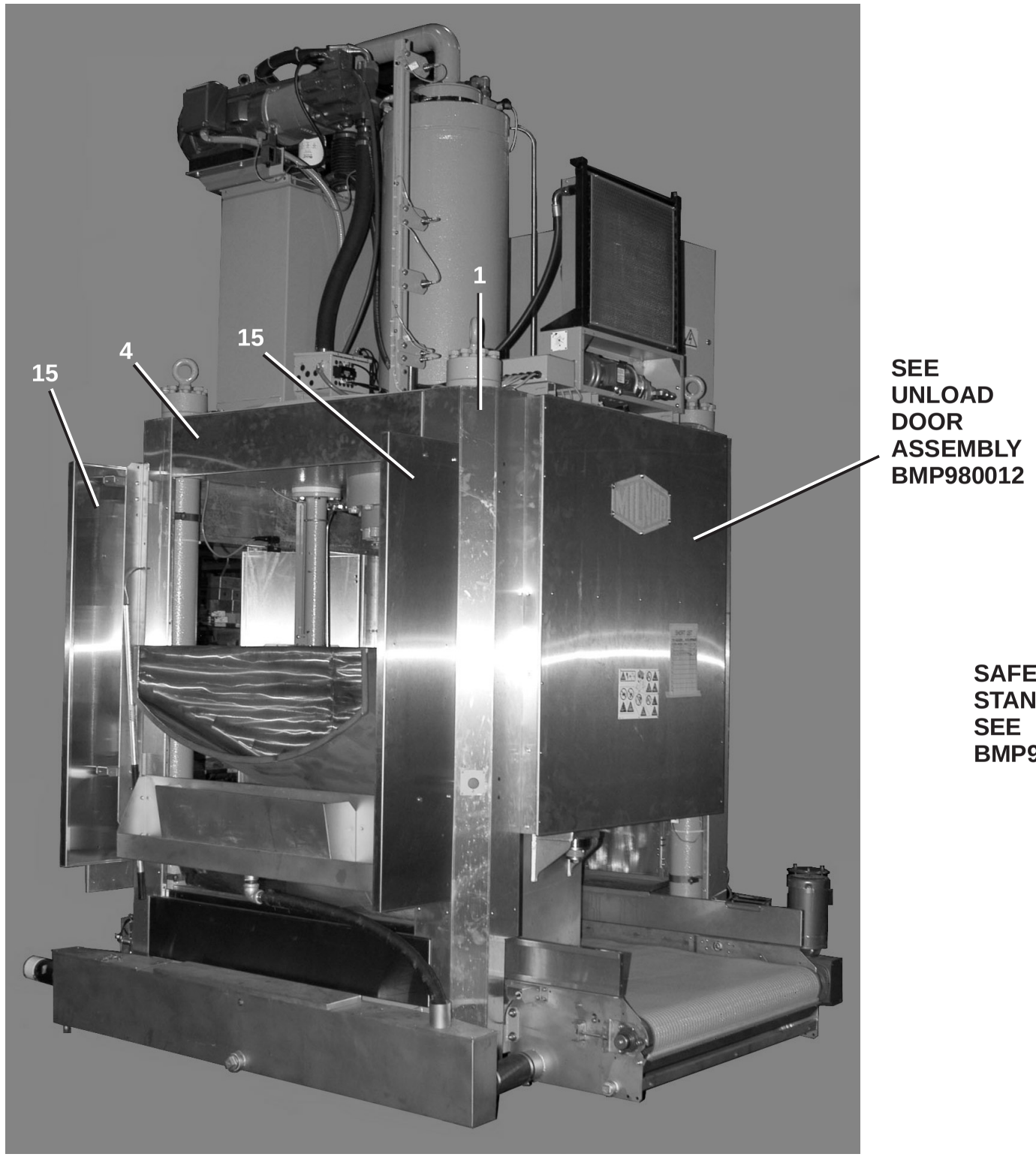

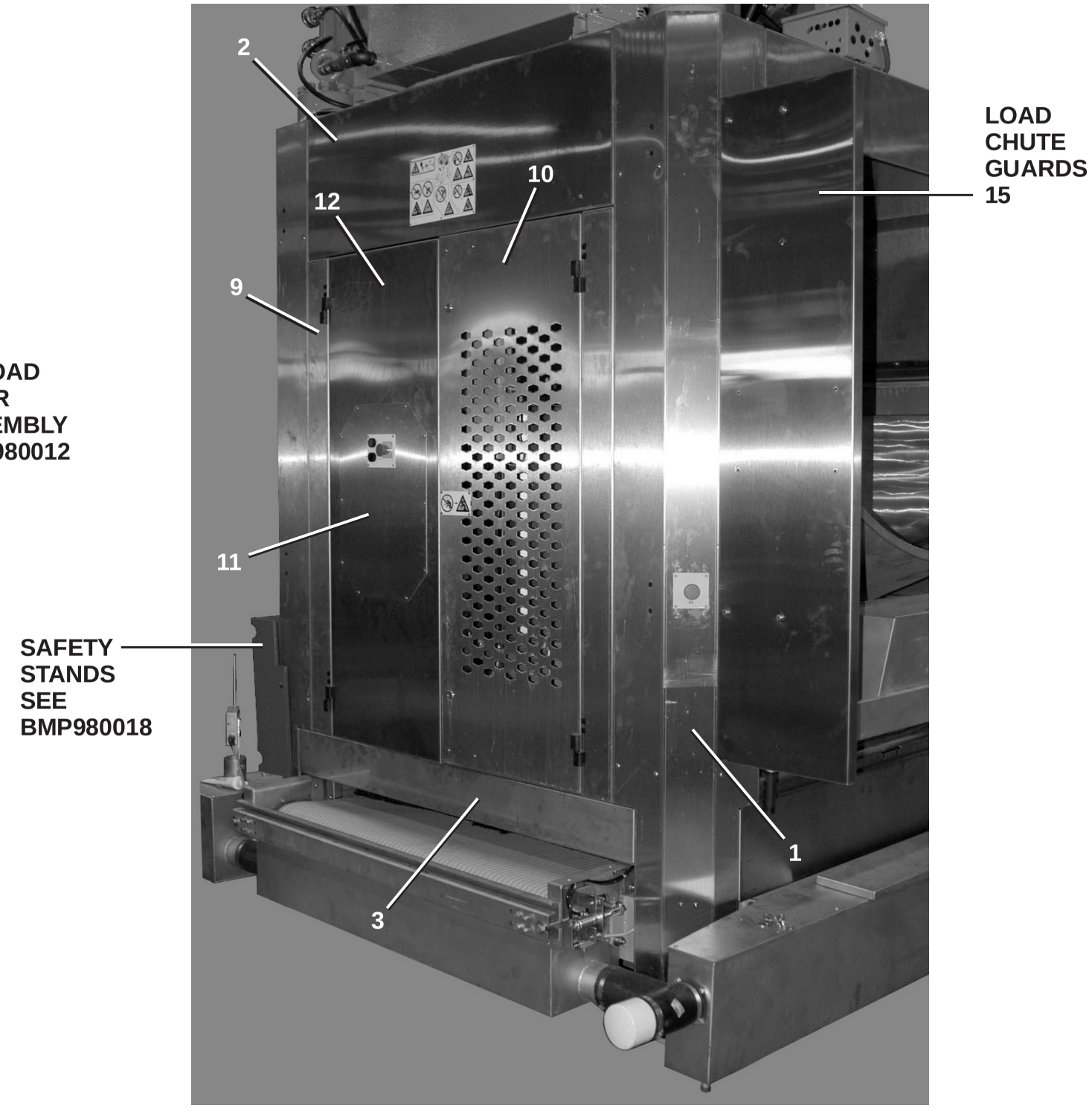

Pellerin Milnor Corporation
P. O. Box 400, Kenner, LA 70063-0400

Litho in U.S.A.

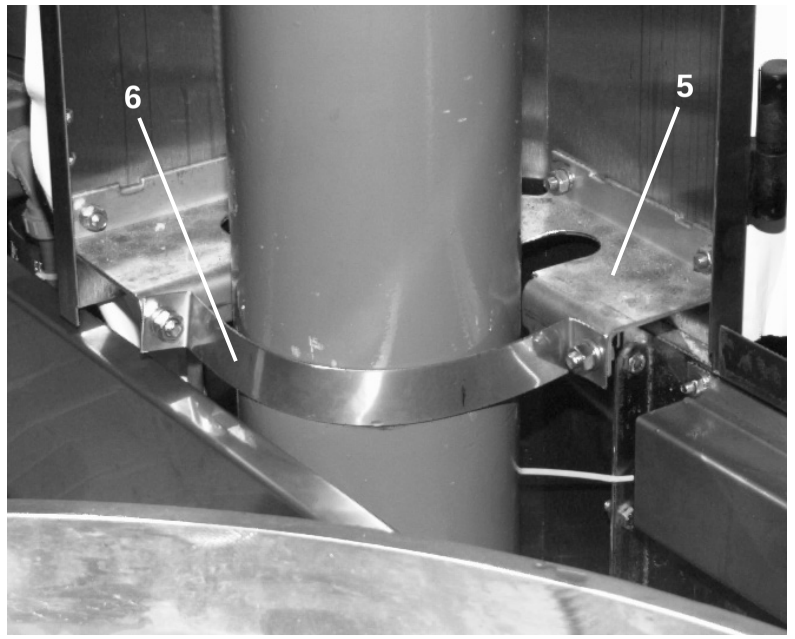

TYPICAL COSMETIC TO FRAME CONNECTIONS

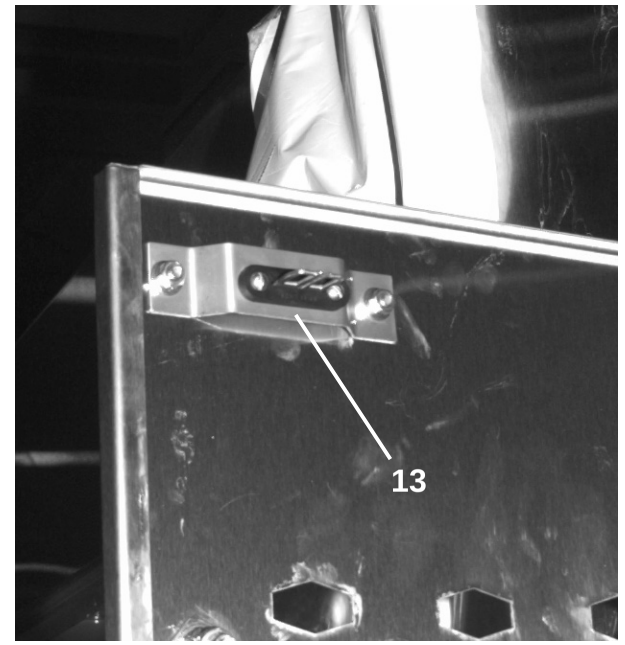

TYPICAL DOOR STRIKER MOUNTING

SAFETY STAND STORAGE BRACKET
(SAFETY STANDS, SEE BMP980018)

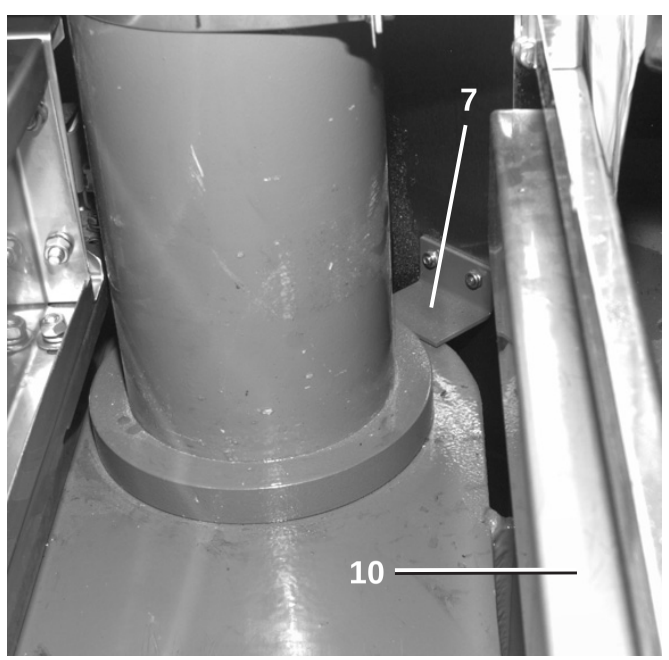

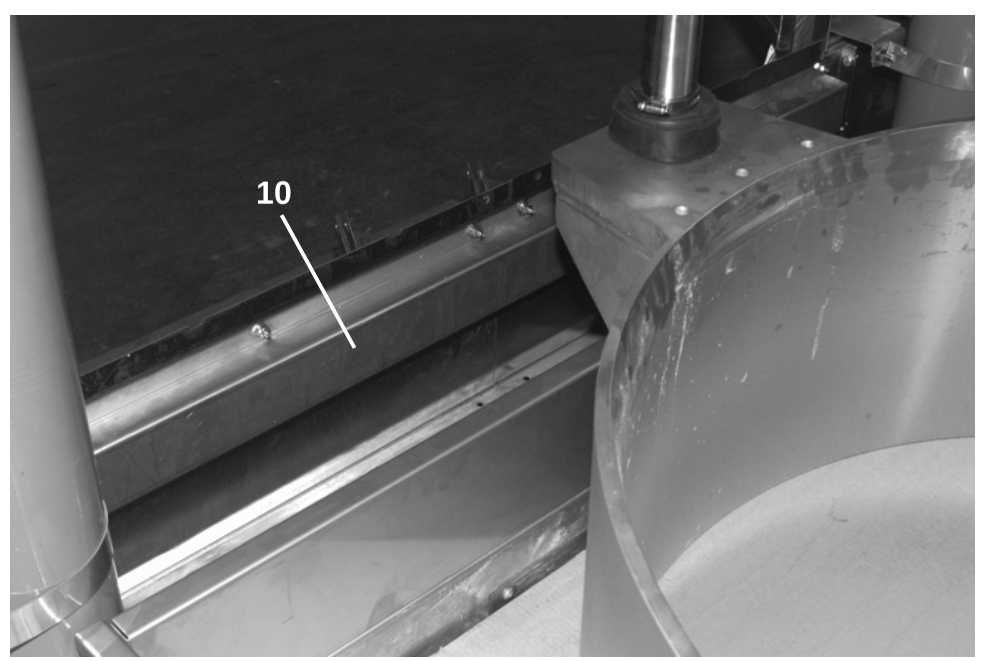

Pellerin Milnor Corporation
P. O. Box 400, Kenner, LA 70063-0400

Litho in U.S.A.

Parts List—Guards, Covers & Cosmetics

Find the correct assembly first, then find the needed components. The item letters (A, B, C, etc.) assigned to assemblies are referred to in the "Used In" column to identify which components belong to an assembly. The item numbers (1, 2, 3, etc.) assigned to components relate the parts list to the illustration.

Used In	Item	Part Number	Description	Comments
			----------ASSEMBLIES----------	
	A	ACS10003	SSPRESS COSMETIC ASSY-MP1A03	
			----------COMPONENTS----------	
all	1	07 10291	COSMATIC CORNER-MP1A03 SSPRESS	
all	2	07 10294	COSM TOP DOOR FRAME-MP1A03	
all	3	07 10292	CONV LOADEND FRAME-MP1A03	
all	4	07 10297	LOADCHUTE TOP FRAME-MP1A03	
all	5	07 10205	COSM CORNER ATTACH BRKT	
all	6	07 10206	COSMETIC CORNER STRAP	
all	7	07 10200B	COSMETIC CORNER SUPPORT BRKT	
all	9	07 10299	DOOR SIDE FRAME-MP1A03	
all	10	07 10378	DOOR PANEL-MP1A03	
all	11	07 10255A	PLATE=SSPRESSS FLT REC SWPNL	
all	12	07 10379	DOOR W/ CTRL PANEL-MP1A03	
all	13	07 10363	DOOR STRIKER MTG BRKT	
all	14	07 10204	SAFETY STAND HANGER-SSPRESS	
all	15	07 10018	LOADCHUTE GUARD 7632	

Can Safety Stands and Diaphragm Bar

MP1601CL,CR,L,R MP1602CL,CR,L,R MP1603CL,CR,L,R MP1604CL,CR,L,R MP1A03CL,CR,L,R

Pellerin Milnor Corporation
P. O. Box 400, Kenner, LA 70063-0400

Litho in U.S.A.

⚠ DANGER ⚠

CRUSH HAZARD - Descending can and/or platen will crush anyone under it. Can and/or platen can descend even with power off.

NEVER crawl or reach under the can and/or platen.

Lock OFF and tag out power and secure factory-supplied safety supports in place before crawling or reaching under the can and/or platen to perform service or maintenance.

ALWAYS ensure all personnel are clear of the press and receiving conveyor before returning power to either machine for service or maintenance.

CAN SAFETY STAND INSTALLATION

(ALWAYS INSTALL BEFORE SERVICING, SEE BIUUUS27.)

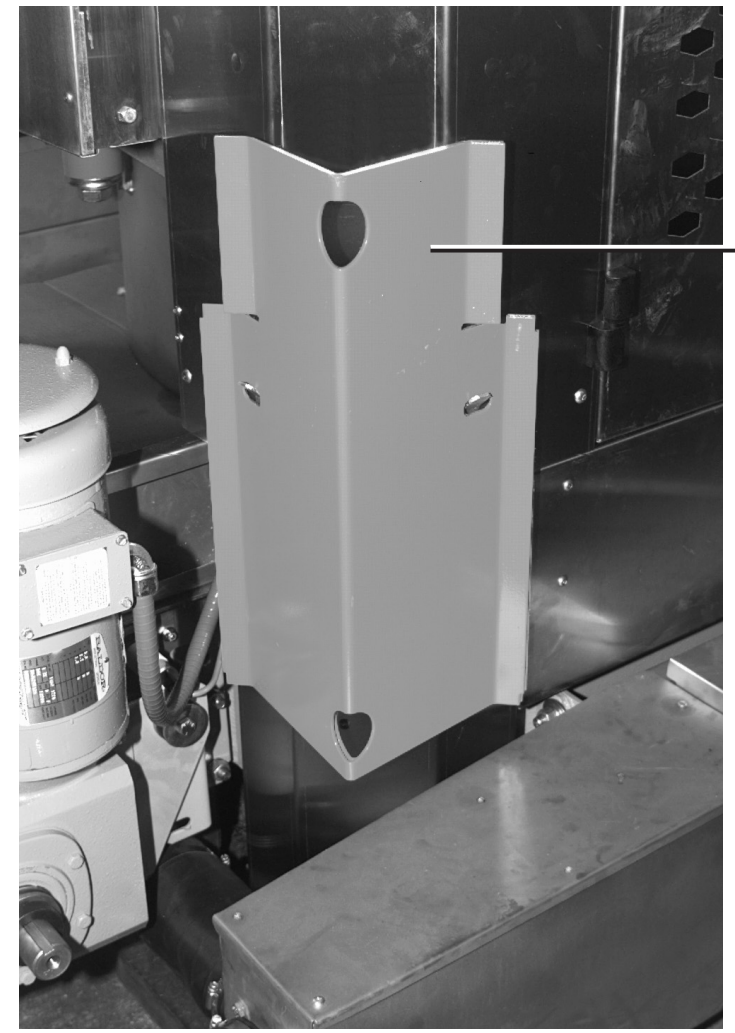

SAFETY STAND STORAGE

Safety stands are to be stored on bracket provided. The storage bracket is located on the corner post near the can. Stored properly the safety stands are extremely visible and easy to access.

Can Safety Stands and Diaphragm Bar

MP1601CL,CR,L,R MP1602CL,CR,L,R MP1603CL,CR,L,R MP1604CL,CR,L,R MP1A03CL,CR,L,R

Pellerin Milnor Corporation
P. O. Box 400, Kenner, LA 70063-0400

Litho in U.S.A.

(ALWAYS INSTALL SAFETY DEVICES BEFORE SERVICING, SEE BIUUUS27, SAFETY FOR SERVICE PERSONNEL.)

DIAPHRAGM SAFETY BAR (ALL MODELS EXCEPT MPIA03CL,CR,L,R)

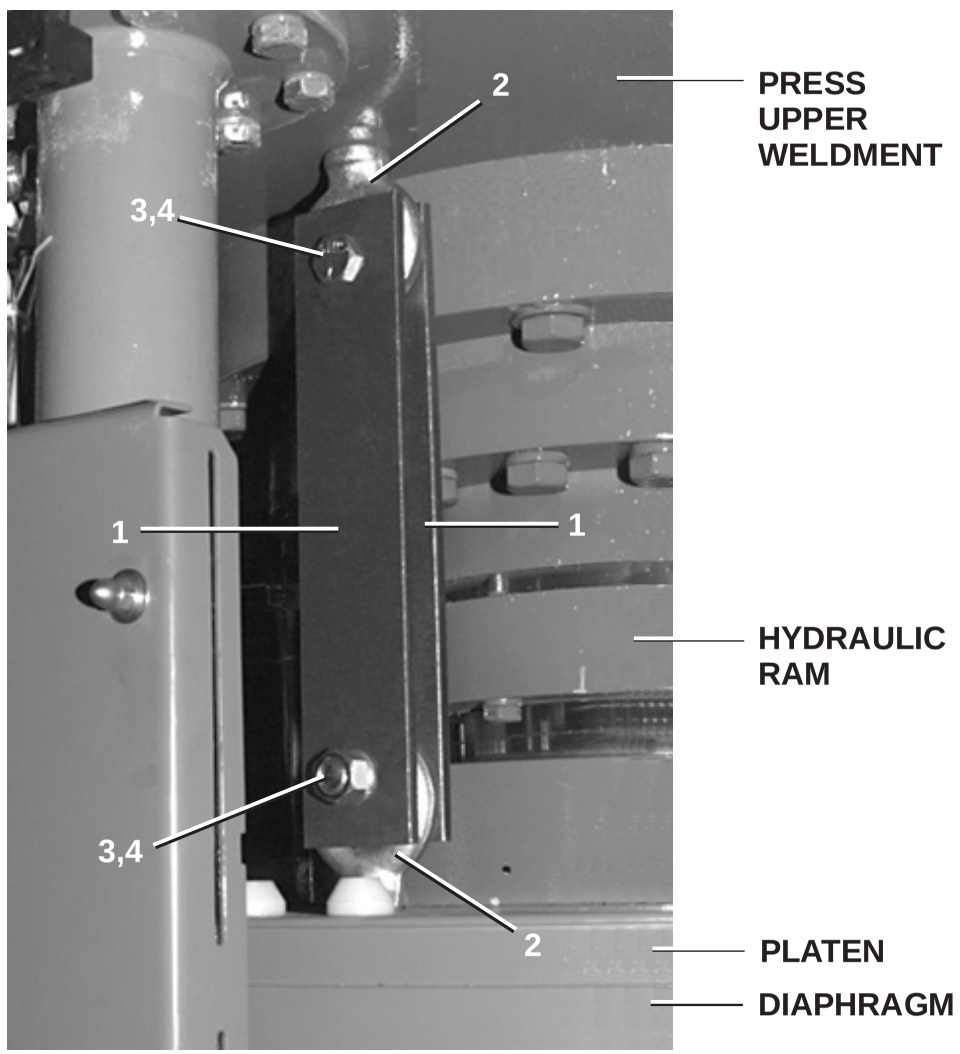

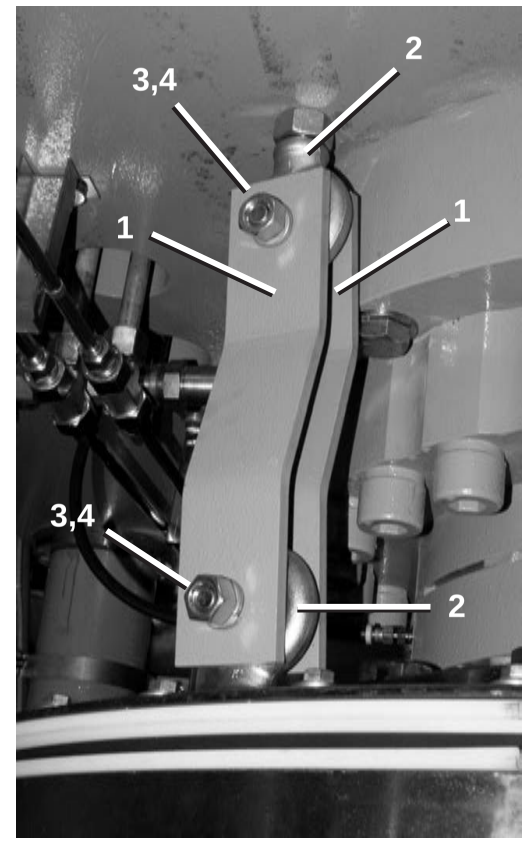

DIAPHRAGM SAFETY BAR (MPIA03CL,CR,L,R ONLY)

Parts List—Safety Stand & Diaphragm Bar

Find the correct assembly first, then find the needed components. The item letters (A, B, C, etc.) assigned to assemblies are referred to in the "Used In" column to identify which components belong to an assembly. The item numbers (1, 2, 3, etc.) assigned to components relate the parts list to the illustration.

Used In	Item	Part Number	Description	Comments
			ASSEMBLIES	
	A	AHT10031	SHIP WITH MACHINE-SSPRESS	MP1601,2,3,4
	B	AHT10030	DIAPHRAM SAFETY BAR ASSY-13RAM	MP1601,2,3,4
	C	AHT10036	SHIP WITH MACHINE-MP1A03	MP1A03CL,CR,L,R
	D	AHT10030B	DIAPHM SAFETY BAR ASSY-MP1A03	MP1A03CL,CR,L,R
			COMPONENTS	
AB	1	07 10262	DIAPHRAM SAFETY BAR	
CD	1	07 10262B	DIAPHRAM SAFETY BAR-14"LG	
all	2	17A054	EYEBOLT 1-8 UNC ZINC PLATED	
all	3	15K235AB	HXCAPSCR 3/4-10UNC2AX3"GR8 ZIN	
all	4	15G240	HXNUT 3/4-10UNC2B SAE ZINC GR2	
AB	5	07 30093	SAFETY SUPPORT-BELL TF60	
CD	5	07 10385	SAFETY STAND-48"CAN MP1A03	
all	6	07 10204	SAFETY STAND HANGER-SSPRESS	

Ship With

MP1603, MP1604, MP1A03CL,CR,L,R

Pellerin Milnor Corporation
P. O. Box 400, Kenner, LA 70063-0400

Litho in U.S.A.

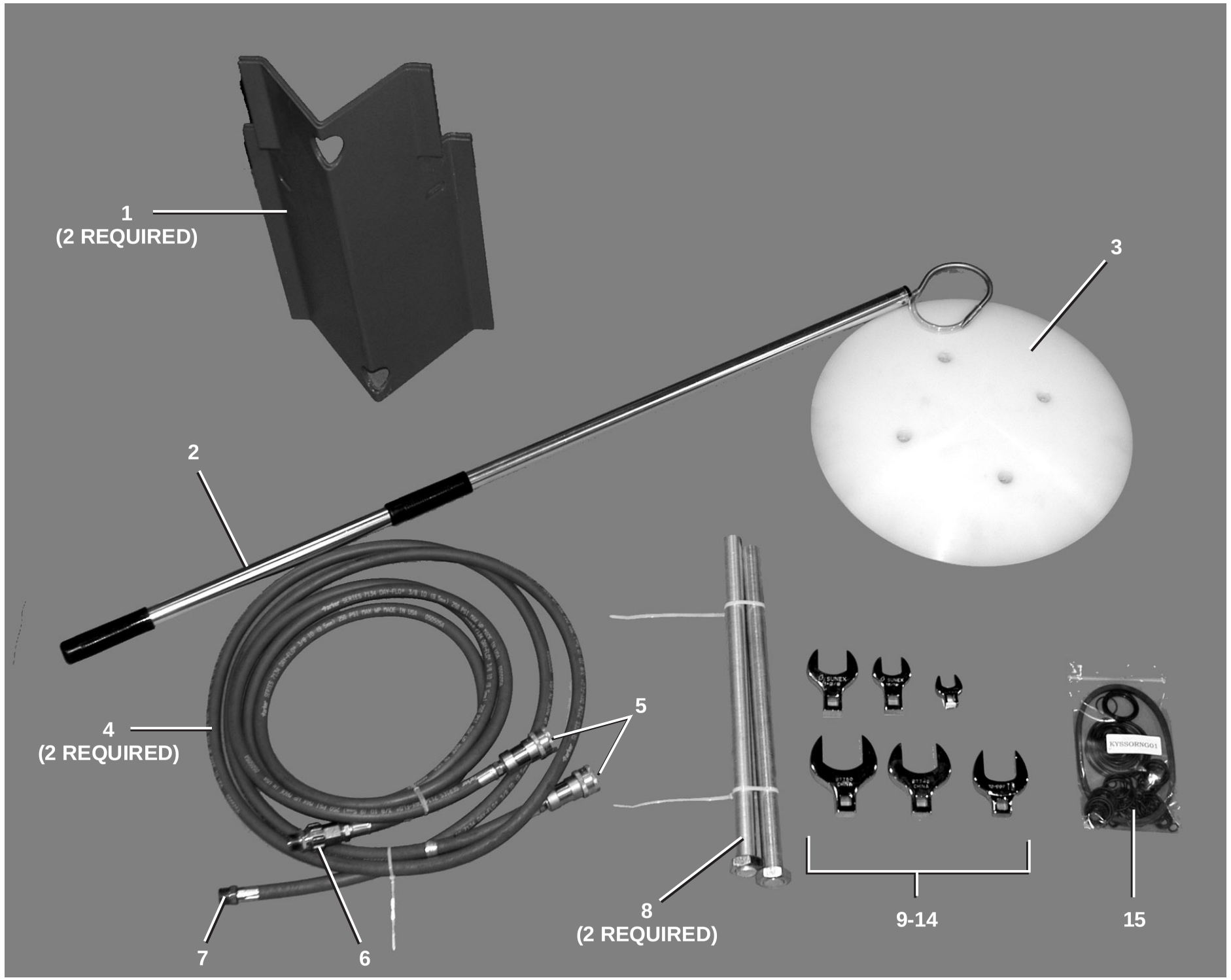

PLUGS
ITEMS 16-24
(NOT SHOWN)
SEE PARTS LIST

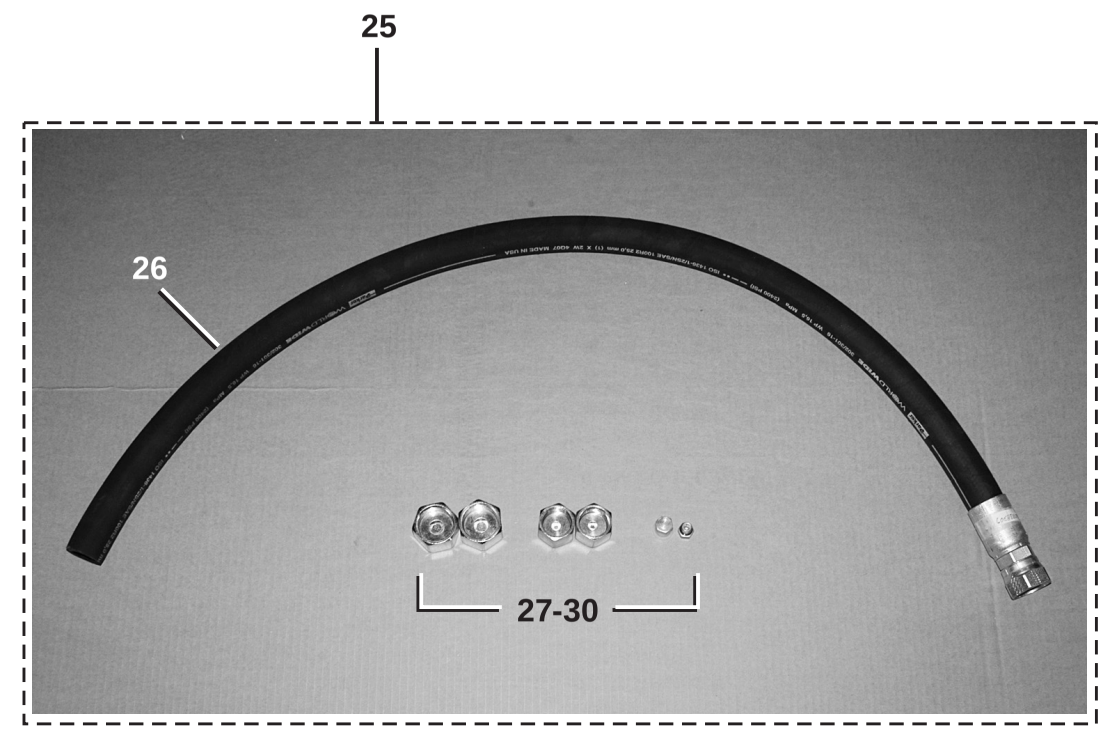

Pellerin Milnor Corporation
P. O. Box 400, Kenner, LA 70063-0400

Litho in U.S.A.

Parts List—Ship With

Find the correct assembly first, then find the needed components. The item letters (A, B, C, etc.) assigned to assemblies are referred to in the "Used In" column to identify which components belong to an assembly. The item numbers (1, 2, 3, etc.) assigned to components relate the parts list to the illustration.

Used In	Item	Part Number	Description	Comments
			----------ASSEMBLIES----------	
	A	AHT10031	SHIP WITH MACHINE-SSPRESS	MP1603, MP1604
	B	AHT10036	SHIP WITH MACHINE-MP1A03	MP1A03
	C	A80DF002	DIAPHRAM FILL ASSY SHIPWITH	MP1603, MP1604, MP1A03
			----------COMPONENTS----------	
A	1	07 30093	SAFETY SUPPORT-BELL TF60	
B	1	07 10385	SAFETY STAND-48"CAN MP1A03	
all	2	27A900	ALUM. GAFF 5/16"DIAX48"L W/3"	
A	3	X7 10055	MEMBRANE SUPPORT DOME-UHMW	
B	3	X7 10055A	MEMBRANE UHMW DOME-MP1A03	
C	4	60E077B120	DIA FILLHOSE 120 LG+ENDS	
C	5	52XY0GP00X	3/8"QUICK DISCONN.FEM#H3-62	
C	6	51E513	3/4HX1/2FP-SWIVEL AND#5AS-12D	
C	7	51E508A	GARDEN HOSE-BRASS 1/2MP X 3/4H	
All	8	17R036A18A	THRD ROD 1-14X18" ZINC	
all	9	97G006C	11/16" X 3/8"DR CROWSFOOT	
all	10	97G010C	15/16" X 1/2"DR CROWSFOOT	
all	11	97G014C	1-3/8"X 1/2"DR CROWSFOOT	
all	12	97G021A	1+1/2" X 1/2" DR CROWSFOOT	
all	13	97G022C	1-5/8" X 1/2"DR CROWSFOOT	
all	14	97G023C	1-7/8" X 1/2"DR CROWSFOOT	
all	15	KYSSORNG01	SS PRESS HYD ORING ASST KIT	
all	16	51P081	PLUG TAPERED 5.7"CAPLUG#T1092	
all	17	51P082	PLUGCAPNOTHD 1.437"CAPLUG#EC23	
all	18	51P083	PLUGCAPNOTHD 1.187"CAPLUG#EC19	
all	19	51P084	PLUGTHD.3/4"O.R.CAPLUG#PDF-120	
all	20	51P085	PLUGTHD.1/4"JIC CAPLUG#PD40	
all	21	51P086	PLUGTHD.1"O.R.CAPLUG#PDF160	
all	22	51P087	PLUGTHD.1"JIC CAPLUG#PD-160	
all	23	51P088	PLUGCAPSLV 13/16 #SC-13/16	
all	24	52PY0LR001	HEXPLUG 1/4"ORING#4-P50N-S	
all	25	KYSSTRBLSH	TROUBLE SHOOTING KIT SSPRESS	

Parts List, cont.— Ship With

Used In	Item	Part Number	Description	Comments
all	26	60EH80C48B	ASSY=HYDHOSE+ONE END 1"X48"LG	(PART ITEM 25)
all	27	52ZN1AS003	TUBEFIT NUT+CAP #16-FNL-S	(PART ITEM 25)
all	28	52ZN0PS003	TUBEFIT NUT+CAP 3/4" 12 FNL-S	(PART ITEM 25)
all	29	52ZP0ES001	TUBEFITPLUG 1/4" #4-PNLO-S	(PART ITEM 25)
all	30	52PY0LR001	HEXPLUG 1/4"ORING#4-P50N-S	(PART ITEM 25)

Safety Unload Door Assembly

MP1601CL,CR,L,R MP1602CL,CR,L,R MP1603CL,CR,L,R MP1604CL,CR,L,R MP1A03CL,CR,L,R

BMP980012/2005352B
(Sheet 1 of 1)

Pellerin Milnor Corporation
P. O. Box 400, Kenner, LA 70063-0400

Litho in U.S.A.

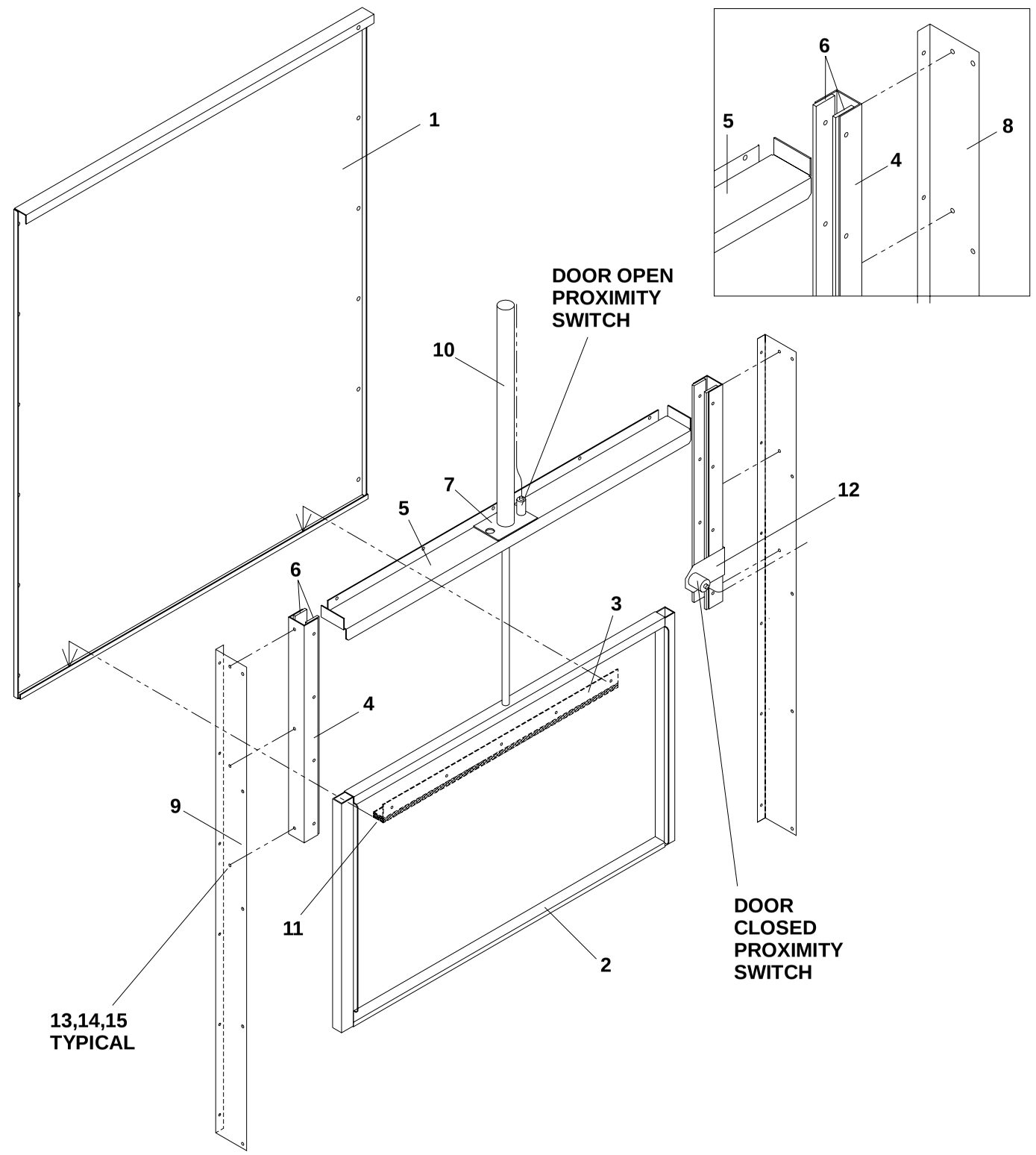

Parts List—Safety Unload Door Assembly

Find the correct assembly first, then find the needed components. The item letters (A, B, C, etc.) assigned to assemblies are referred to in the "Used In" column to identify which components belong to an assembly. The item numbers (1, 2, 3, etc.) assigned to components relate the parts list to the illustration.

Used In	Item	Part Number	Description	Comments
			----------ASSEMBLIES----------	
	A	ACS10001	CONV UNLOAD DOOR ASSEMBLY	MP1601,2,3,4
	B	ACS10004	CONV UNLOAD DOOR ASSY-MP1A03	MP1A03CL,CR,L,R
			----------COMPONENTS----------	
A	1	07 10215	CONV UNLOAD PANEL-SSPRESS	
B	1	07 10295	CONV UNLOAD PANEL-MP1A03	
A	2	07 10216	CONV UNLOAD DOOR-SSPRESS	
B	2	07 10296	CONV UNLOAD DOOR-MP1A03	
all	3	07 10217	DOOR TRACK-OUTSIDE	
all	4	07 10218	DOOR TRACK-INSIDE	
A	5	07 10219	AIR CYL MTG CHANNEL	
B	5	07 10298	AIRCYL MTG CHANNEL-MP1A03	
all	6	07 10220	DOOR TRACK UHMW LINER	
all	7	07 10221	AIR CYL MTG ADJ PLATE	
A	8	07 10212	UNLOAD DOOR MTG ANGLE-RT	
B	8	07 10375	UNLOAD DOOR MTG RT-MP1A03	
A	9	07 10212A	UNLOAD DOOR MTG ANGLE-LF	
B	9	07 10375A	UNLOAD DOOR MTG LF-MP1A03	
all	10	27C120	AIRCYL 1.5"BORE X 20"STROKE	
A only	11	27A680	FELT 1/4"THK X 1"W SAE F-6	
all	12	07 10263	PROX.SW BKT-DISC DOOR DOWN	
all	13	15K052	HXCAPSCR 5/16-18UNC2AX3/4 SS18	
all	14	15U205	LOCKWASHER MEDIUM 5/16" 18-8SS	
all	15	15G186	HEXNUT 5/16-18UNC2 SS18-8	

Frame Assembly

MP1601CL,CR,L,R MP1602CL,CR,L,R MP1603CL,CR,L,R MP1604CLR,L,R MP1A03CL,R,L

Pellerin Milnor Corporation
P. O. Box 400, Kenner, LA 70063-0400

Litho in U.S.A.

Notes:

1. The supernuts should be hand tightened all the way down to the washer. Do not leave a gap between the supernut and the washer.

2. Torque the 6-BOLT supernut bolts using the following sequence. This sequence is required to “seat” the bolts properly and prevent binding. DO NOT use a torque device that has not been calibrated in the last 12 months.
   A. Torque to 25-35 ft-lbs. in pattern shown.
   B. Torque to 65-75 ft-lbs. in pattern shown.
   C. Torque to 500 ft-lbs. in pattern shown.
   D. Final torque to 840-860 ft-lbs. in pattern shown.
   E. Repeat final torque 5 rounds in pattern shown.

3. Torque the 8-BOLT supernut bolts using the following sequence. This sequence is required to “seat” the bolts properly and prevent binding. DO NOT use a torque device that has not been calibrated in the last 12 months.
   A. Torque to 25-35 ft-lbs. in pattern shown.
   B. Torque to 65-75 ft-lbs. in pattern shown.
   C. Torque to 500 ft-lbs. in pattern shown.
   D. Final torque to 1,450-1,470 ft-lbs. in pattern shown.
   E. Repeat final torque 5 rounds in pattern shown.

6-BOLT SUPERNUT TORQUE SEQUENCE

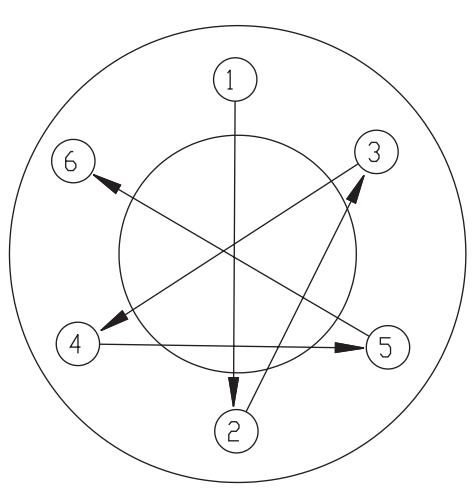

8-BOLT SUPERNUT TORQUE SEQUENCE

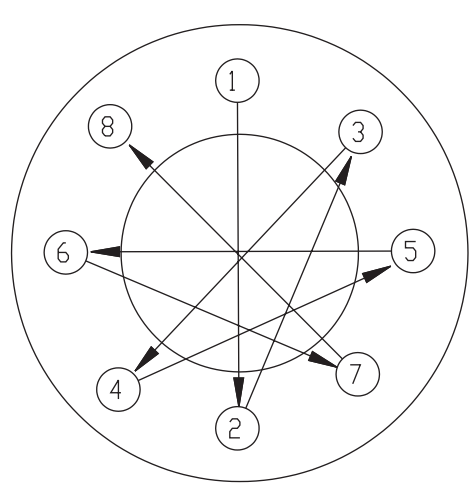

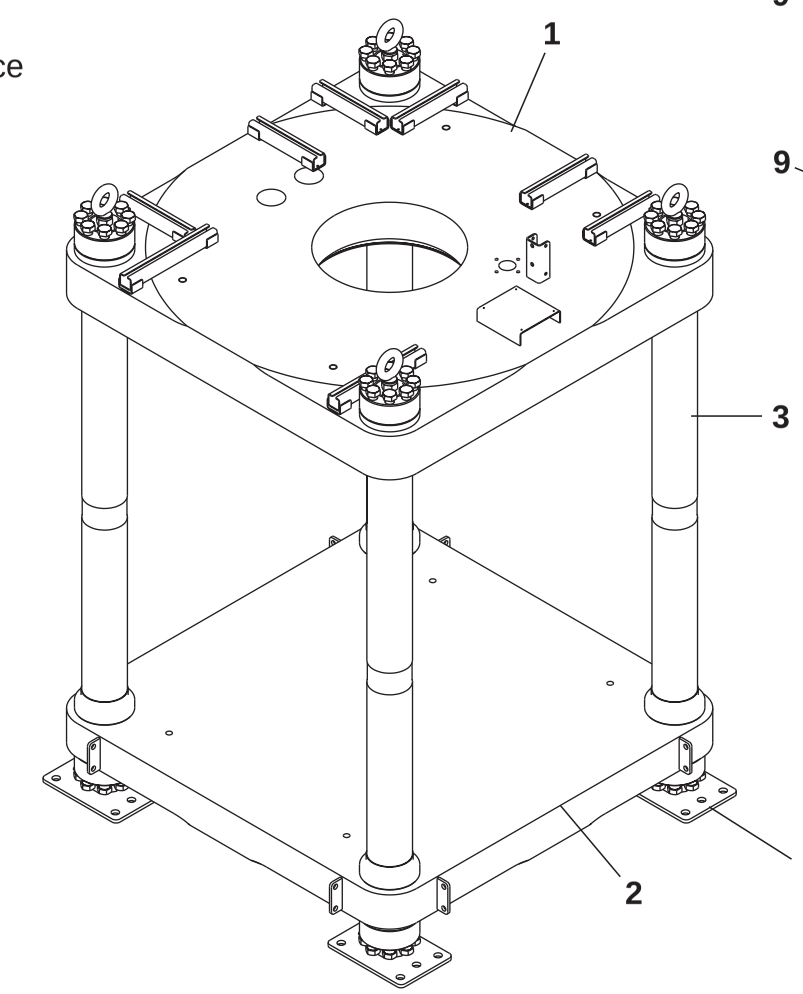

Footpads are threaded to allow vertical adjustments

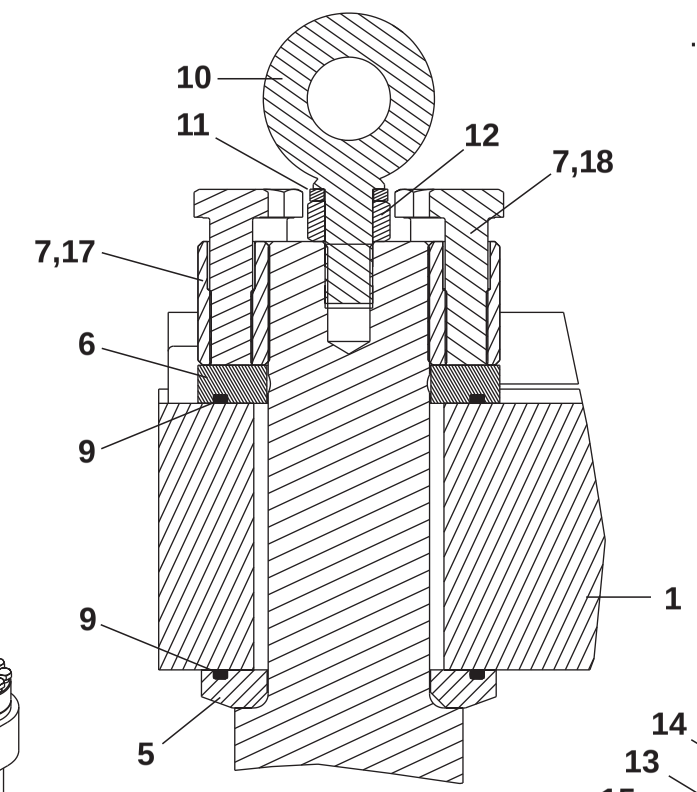

SECTION: COLUMN TOP

Note: ⁎Clean area with degreaser, fill cavity and seal rubber boot with silicone, item 16.

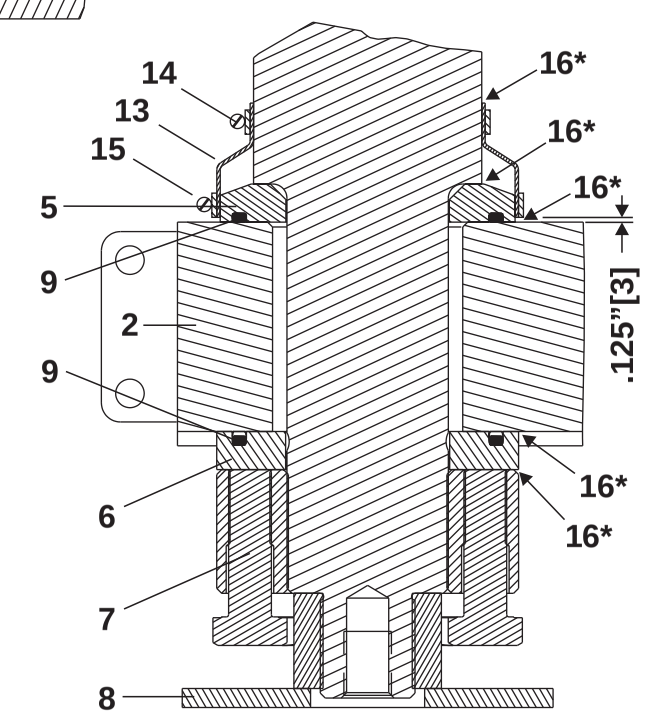

SECTION: COLUMN BOTTOM

Pellerin Milnor Corporation
P. O. Box 400, Kenner, LA 70063-0400

Litho in U.S.A.

Parts List—Frame Assembly

Find the correct assembly first, then find the needed components. The item letters (A, B, C, etc.) assigned to assemblies are referred to in the "Used In" column to identify which components belong to an assembly. The item numbers (1, 2, 3, etc.) assigned to components relate the parts list to the illustration.

Used In	Item	Part Number	Description	Comments
			ASSEMBLIES	
	A	GHG10000	SSPRESS FRAME ASSY-31/35BAR	MP1601, MP1603
	B	GHG10002	SSPRESS FRAME ASSY-47/50BAR	MP1602, MP1604
	C	GHG10003	SSPRESS FRAME ASSY-110KG	MP1A03CL,CR,LR,R
			COMPONENTS	
A	1	W7 10060	PRESS HEAD WELDMENT-35BAR	
B	1	W7 10009	PRESS HEAD WELDMENT-45BAR	
C	1	W7 10036	PRESS HEAD WELDMENT-110KG	
A	2	W7 10008	PRESS BASE WELDMENT	
B	2	W7 10010	SSPRESS BASE WELDMENT-45BAR	
C	2	W7 10037	SSPRESS BASE WELDMENT-110KG	
A	3	X7 10020	MACH=SSPRESS COLUMN +3, 35BAR	
B	3	X7 10021	MACH=SSPRESS COLUMN +3, 50BAR	
C	3	X7 10038	MACH=SSPRESS COLUMN 110KG	
all	5	07 10100D	MACH=SSPRESS COLUMN RING	
all	6	07 10100A	MACH=SSPRESS SUPERNUT RING	
all	7	AHG10000	SSPRESS SUPER NUT ASSEMBLY	
all	8	W7 10103	SSPRESS FOOT WELDMENT	
all	9	60C196	ORING SQUARE 6.475ID #Q439-75N	
all	10	17A054A	EYEBOLT W/SHOULDER 1.25-7X3 ST	
all	11	15U425	LOCKWASHER MEDIUM 1+1/4"ZINC P	
all	12	15G260	HXNUT 1+1/4-7UNC2B BLK GR2	
all	13	07 10119	COLUMN WASHER RUBBER BOOT	
all	14	27A083S	HOSECLAMP 5+1/8-7"SSSCR#HSS104	
all	15	27A089	HOSECLAMP S.S.SCREW 6+5/8-8.5	
all	16	20C040B	SUPERFLEX CLR RTV SIL 10.2OZ	
all	17	X7 10012	MACH=SUPERNUT SSPRESS, 50BAR	PART OF 7
all	18	X7 10013	MACH=SSPRESS SUPERNUT BOLT	PART OF 7

Reuse Tanks

MP1603CL,CR,L,R MP1604CL,CR,L,R MP1A03CL

BMP070039/2008084B
(Sheet 1 of 2)

Pellerin Milnor Corporation
P. O. Box 400, Kenner, LA 70063-0400

Litho in U.S.A.

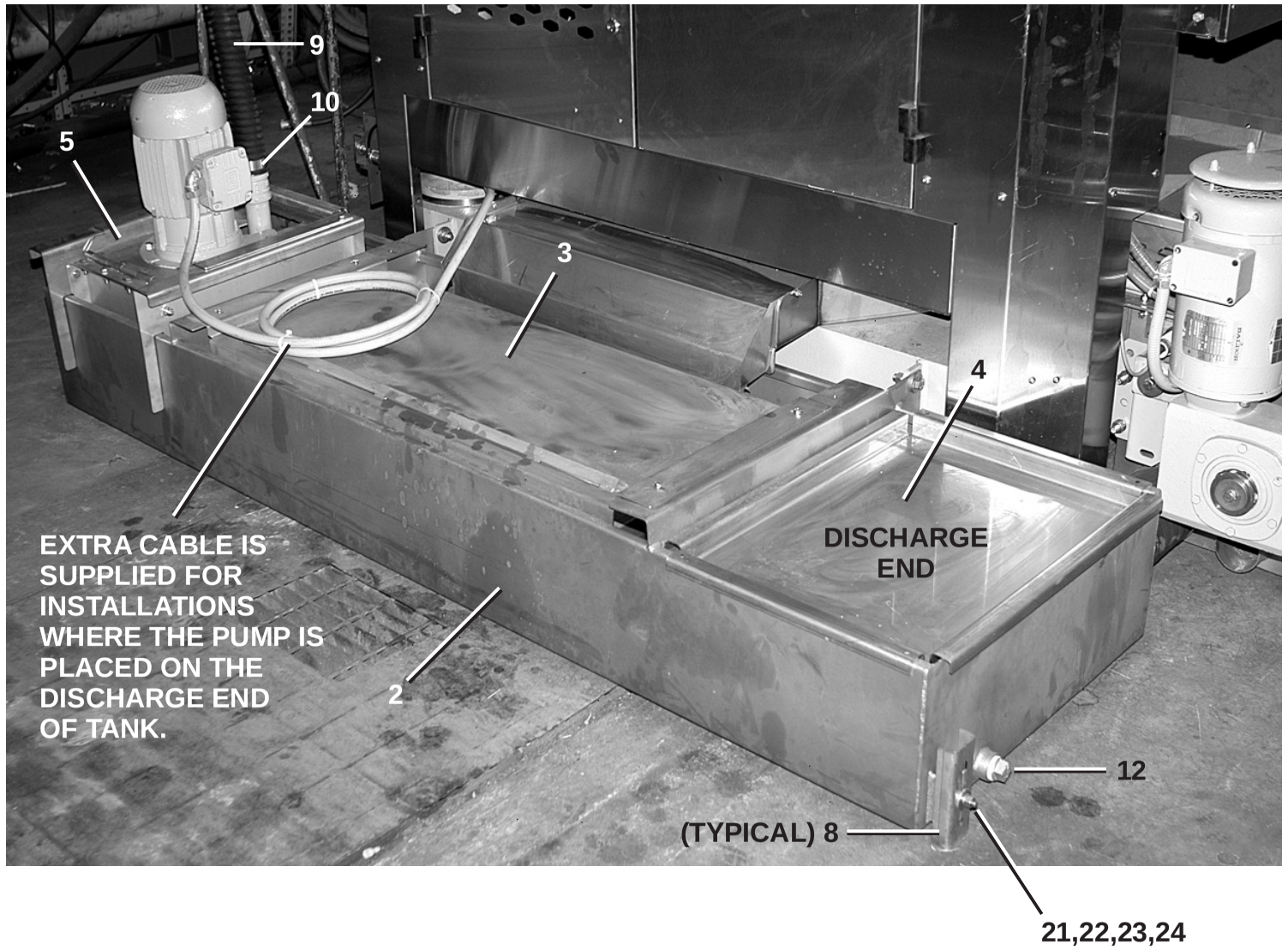

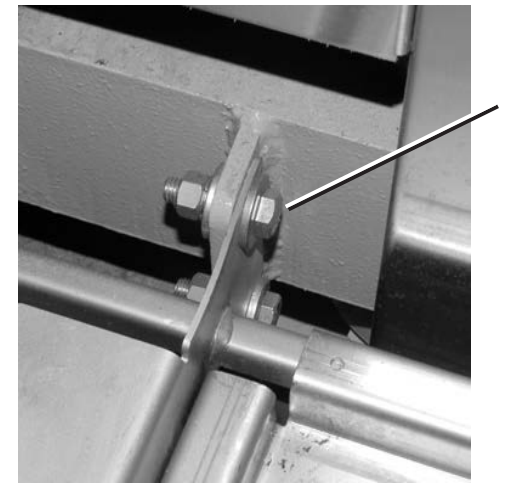

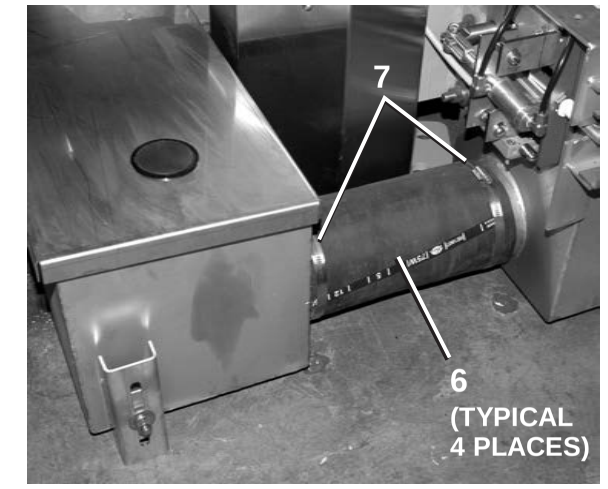

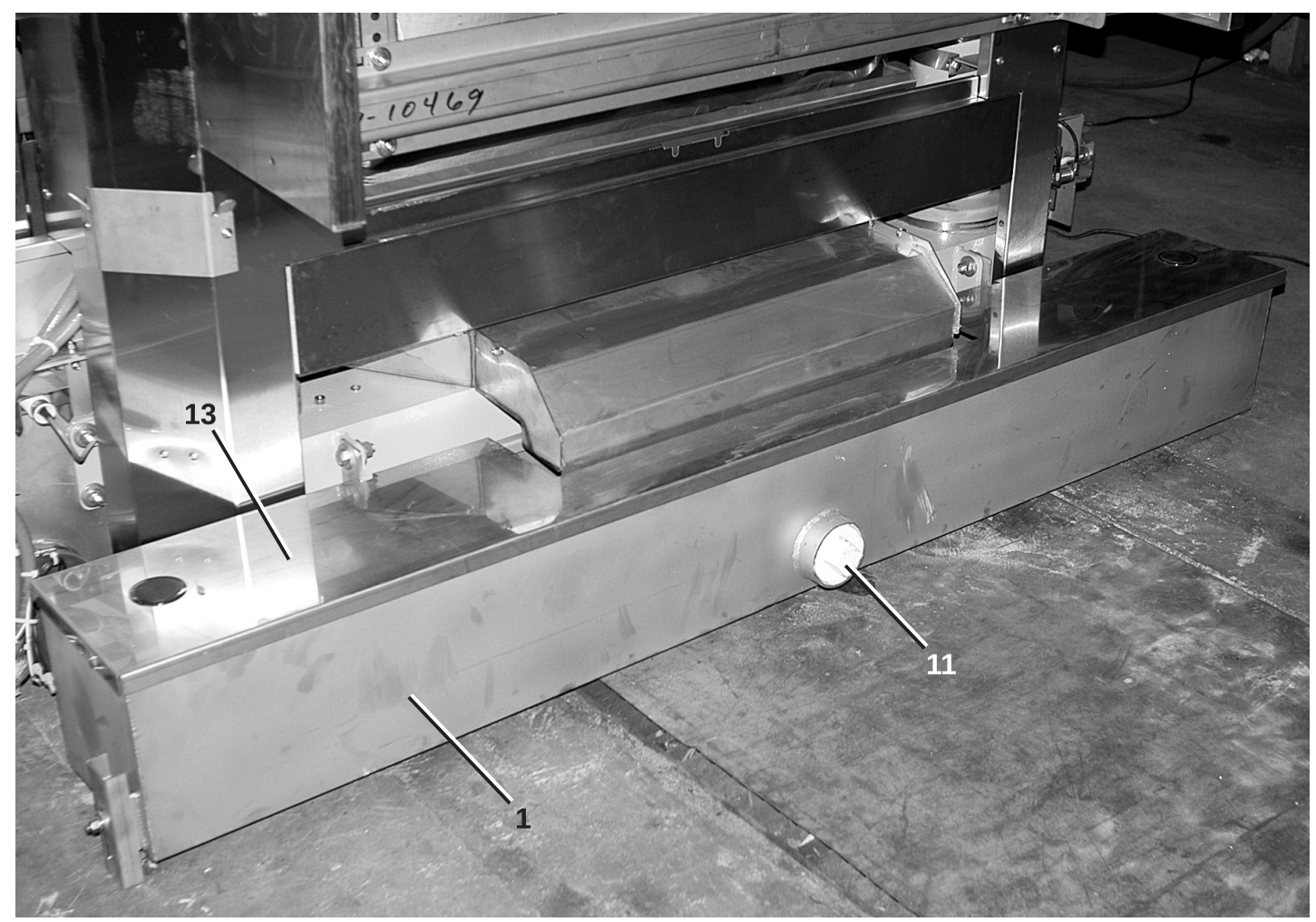

MP1603 AND MP1604 REUSE TANKS ARE SHOWN.
MP1A03CL REUSE TANKS ARE SIMILIAR, SEE PARTS LIST

Pellerin Milnor Corporation
P. O. Box 400, Kenner, LA 70063-0400

Litho in U.S.A.

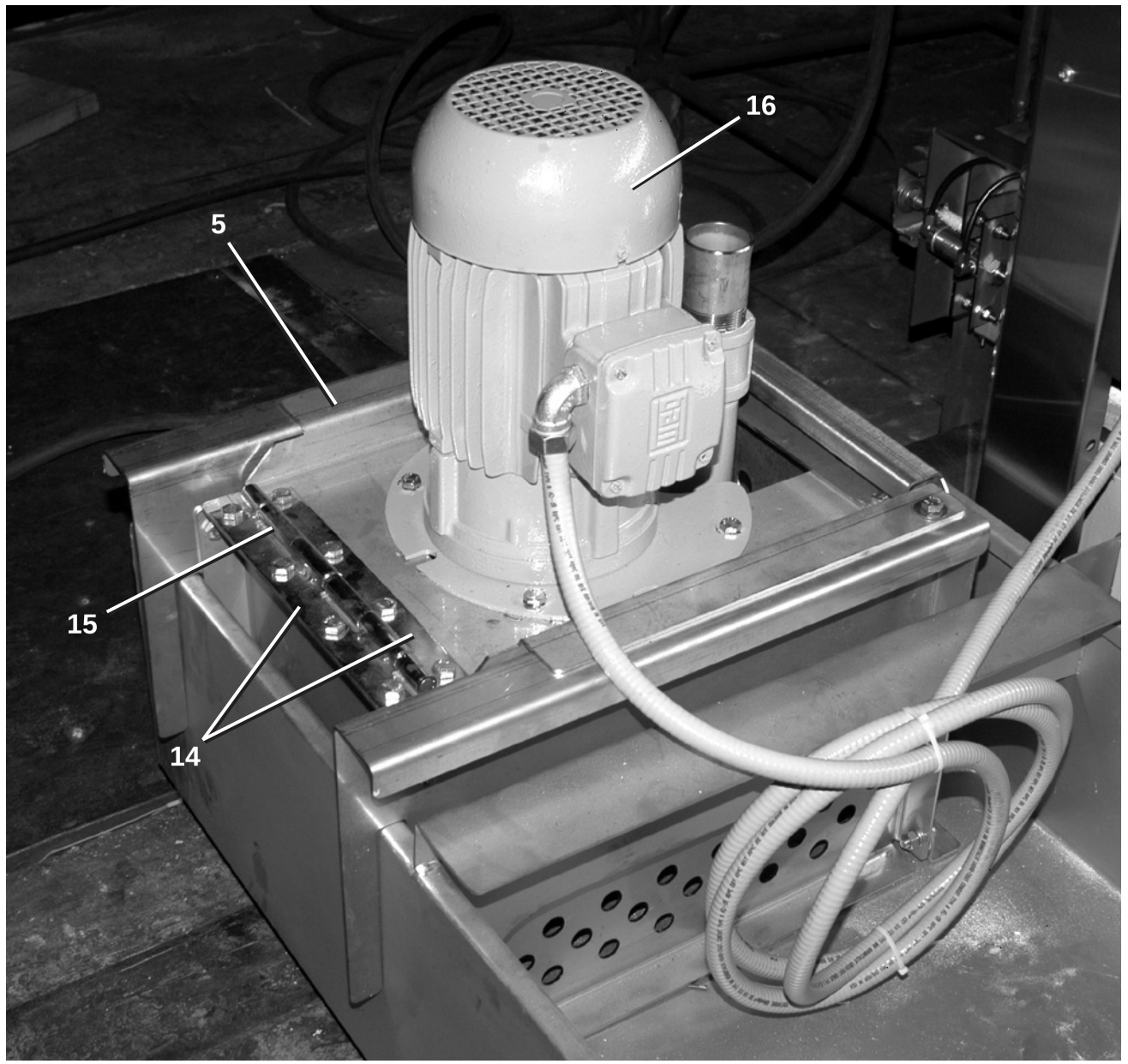

Parts List—Reuse Tanks

Find the correct assembly first, then find the needed components. The item letters (A, B, C, etc.) assigned to assemblies are referred to in the "Used In" column to identify which components belong to an assembly. The item numbers (1, 2, 3, etc.) assigned to components relate the parts list to the illustration.

Used In	Item	Part Number	Description	Comments
			ASSEMBLIES	
	A	ALC420175	SIDE TANK+PUMP LAYT-MP1603	MP1603, MP1604
	B	ALC420172	SIDE TANK+PUMP LAYT-MP1A03	MP1A03
			COMPONENTS	
A	1	W4 23593	SIDE TANK NARROW	
B	1	W4 23638	MP1A03 SIDE TANK NARROW	
A	2	W4 23594	SIDE TANK WIDE WLDMNT	
B	2	W4 23640	MP1A03 SIDE TANK WIDE WLDMNT	
A	3	W4 23548	SIDE TANK COVER WLDMT	
B	3	W4 23643	MP1A03 SIDE TANK COVER WLDMT	
all	4	07 10495	BLANK PUMP STAND COVER	
A	5	ALC420171	REUSE PUMP STAND ASSEMBLY	
B	5	ALC420173	REUSE PUMP STAND ASSY MP1A03	
all	6	60E312A12A	HOSE 5"ID X 12"LG GATES 75W	
all	7	27A086	HOSECLAMP 3+1/8-6"CADSCR#HS-88	
all	8	04 23474	CLEANOUT TANK LEG 4840M	
all	9	60E201	HOSE 2"ID W/S GATES#4686-0200	
all	10	27A072	T-BOLT HOSECLAMP2.16-2.47CADSC	
all	11	5SP3AP4SC	NPT PLUG 3" SQ SK40 PVC	
all	12	5SP1ADESC	NPT PLUG 1" SQ CORED GAL CI	
A	13	04 23629	SMALL SIDE TANK COVER	
B	13	04 23650	MP1A03 SMALL SIDE TANK COVER	
all	14	W4 23539	WLMT=HINGE PRESS TANK	
all	15	04 23540	PIN=HINGEPUMP MOUNT	
all	16	27E940A96	2X1-6.35PUMP W/3HP TEFC MOTOR	
all	17	15K171	HEXCAPSCR 1/2-13UNC2X1+3/4 SS1	
all	18	15U310S	FLATWASH-SS .53 X 1.37 .187T	
all	19	15U310	LOKWASHER REGULAR 1/2 SS18-8	
all	20	15G231S	HXFINJAMNUT 1/2-13UNC2B SS18-8	
all	21	15A020S	CARBOLT 3/8-16X1" SS18-8	
all	22	15U245	FLTWASH 3/8 STD COMM 18-8 SS	
all	23	15U260	LOCKWASHER MEDIUM 3/8 SS18-8	
all	24	15G206	HEXNUT 3/8-16 UNC2 SS 18-8	

Hydraulic Piping and Assemblies

2

Hydraulic Schematic

MP1550CL,CR,L,R MP1603CL,CR,L,R (35BAR) MP1604CL,CR,L,R (50BAR) MP1A03CL,CR,L,R

Pellerin Milnor Corporation
P. O. Box 400, Kenner, LA 70063-0400

Litho in U.S.A.

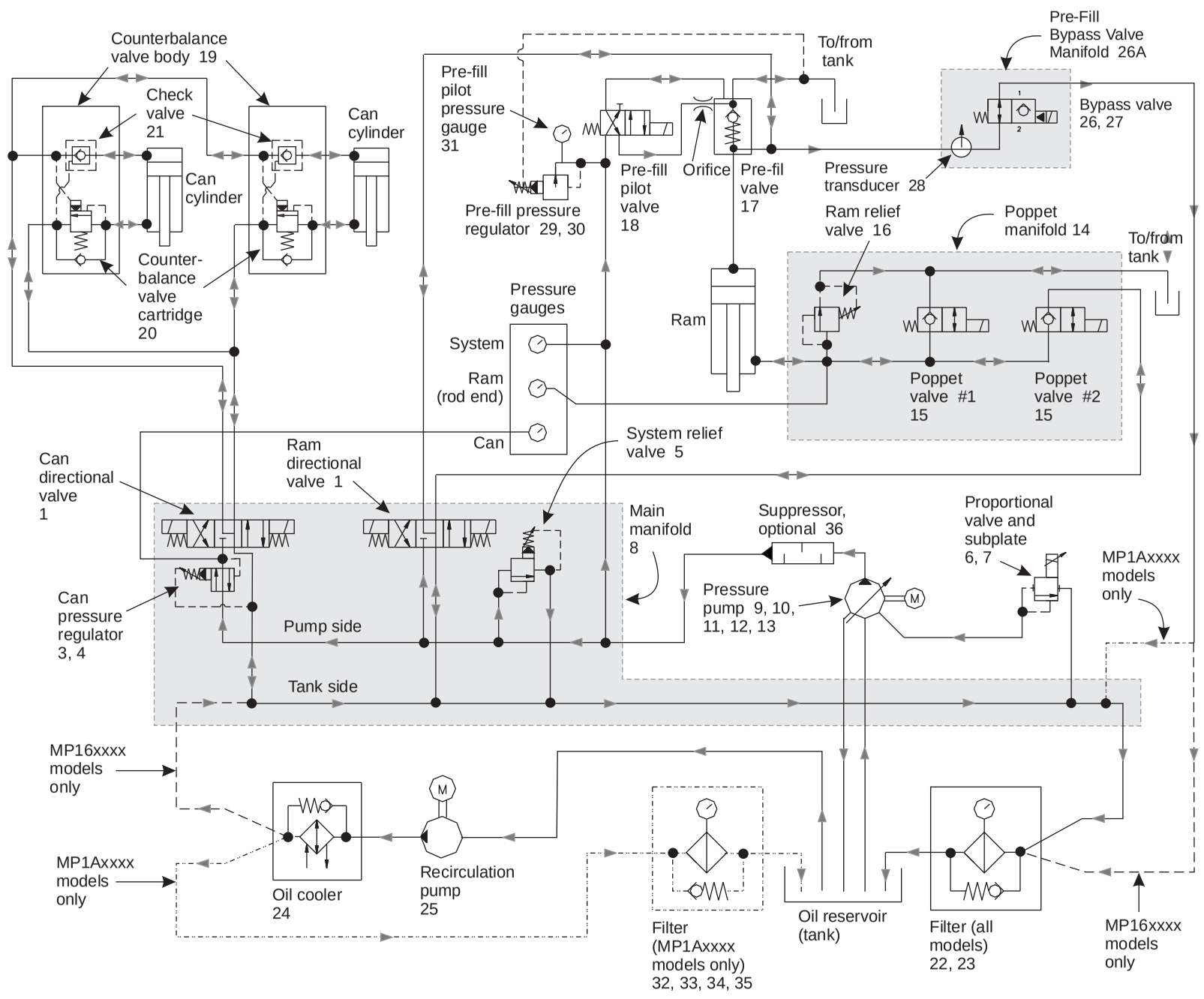

Parts List—Hydraulic Schematic

Find the correct assembly first, then find the needed components. The item letters (A, B, C, etc.) assigned to assemblies are referred to in the "Used In" column to identify which components belong to an assembly. The item numbers (1, 2, 3, etc.) assigned to components relate the parts list to the illustration.

Used In	Item	Part Number	Description	Comments
			ASSEMBLIES	
	A	AHT10000C	HYDRAULIC PACKAGE-35BAR	MP1550, MP1603
	B	AHT10032B	HYDRAULIC PACKAGE-50BAR	MP1604
	C	AHT10034	HYDRAULIC MP1A03-35BAR	MP1A03
	D	AHT10033B	OIL RESERVOIR ASSY-35/50BAR	MP1550, MP1603, MP1604
	E	AHT10035	OIL RESERVOIR MP1A03-35BAR	MP1A03
	F	AHT10004D	HYD MAIN PUMP ASSY-35/50BAR	MP1550, MP1603, MP1604
	G	AHT10004E	HYD MAIN PUMP ASSY-MP1A03	MP1A03
	H	AHT10002D	MAIN PRESS MANIFOLD-35/50BAR	MP1550, MP1603, MP1604
	I	AHT10002E	MAIN PRESS MANIFOLD-MP1A03	MP1A03
	J	AHT10007	PROPOR'L VALVE ASSY-MK2 35/50	MP1550, MP1603, MP1604
	K	AHT10007A	PROPOR'L VALVE ASSY-MP1A03	MP1A03
	L	AHT10012	GAGE ASSEMBLY 35/50BAR SSPRESS	MP1550, MP1603, MP1604
	M	AHT10012A	GAGE ASSEMBLY-MP1A03	MP1A03
	N	AHT10010B	PREFILL VALVE MANIFOLD	MP1550, MP1603, MP1604
	O	AHT10010C	PREFILL VALVE ASSEMBLY-MP1A03	MP1A03
	P	G80CT001	GEN ASSY COOLING TOWER	MP1550, MP1603, Mp1604, MP1A03
	Q	A80CC001	CAN CYL-COUNTERBAL ASSY	MP1550, MP1603, MP1604
	R	A80CC005	CAN CYL-COUNTERBAL ASSY-MP1A03	MP1A03
			COMPONENTS	
H,I	1	96RH709E37	DIRECT.VALVE CENTER OP 24VDC	CAN + RAM DIRECTIONAL MP1550, MP1603, MP1604
I	2	96RH720	DIRECT.CONT.VLV.ATOS(D08)	RAM DIRECTIONAL MP1A03
H,I	3	96DH475A	CARTRIDGE,PRESS.REDUCING VALVE	
H,I	4	96DH475	PRESS.REDUCING VLV-SUN=BODY	
H,I	5	96DH440A	CARTRIDGE,DIRECT RELIEF VALVE	
J,K	6	96RH708E38	PROP.RELIEF VALVE 6X DESIGN	
J,K	7	96DH457A	SUBPLATE D03-DAMAN#DD03SPB6S	
H	8	96DH453	MANIFOLD,DAMAN #DD05HP023S/S	
I	8	96DH485	MANIFOLD-DAMAN DD08P025S/S	
A	9	27E5510C	PUMP-TO-MOTOR MOUNT 6.00"LG	
B	9	27E5507JA	MAGNALOY M284682C ADAPTER	
C	9	27E5507A	PUMP-TO-MOTOR MOUNT 7.88"LG.	
A	10	27E5510	COUP.ASSY.=1+5/8"BOREX3/8KW	
B,C	10	27E5507C	MAGNLOY COUP.M50012816 HUBONLY	
A	11	27E5510A	COUP.ASSY.=1+1/4"BOREX5/16KW	
B	11	27E5507J	MAGNALOY M50010810 HUB KEYED	
C	11	27E5507B	MAGNLOY COUP.M50012414 HUBONLY	

Pellerin Milnor Corporation
P. O. Box 400, Kenner, LA 70063-0400

Litho in U.S.A.

Parts List—Hydraulic Schematic

Find the correct assembly first, then find the needed components. The item letters (A, B, C, etc.) assigned to assemblies are referred to in the "Used In" column to identify which components belong to an assembly. The item numbers (1, 2, 3, etc.) assigned to components relate the parts list to the illustration.

Used In	Item	Part Number	Description	Comments
A	12	27E5510B	HYTREL INSERT-MAGNA#M370H5	
B,C	12	27E5507D	MAGNALOY M570-U9 INSERT	
	13	27E550566U	PSTN PUMP-KAWASAKI 60HZ TESTD	MP1550, MP1603
	13	27E550566X	PSTN PMP-KAWASAKI 60HZ20HPTEST	MP1604
	13	27E550766	PISTON PUMP-KAWASAKI(110K)	MP1A03
H,I	14	96DH452	MANIFOLD, MACH-V	
H,I	15	96DH452A01	POPPET=COIL + CARTRIDGE	
H,I	16	96DH452A02	CARTRIDGE,RELIEF CARTRIDGE VLV	
N,O	17	X7 10416	PREFILL VALVE REXROTH-MACHINED	
N,O	18	96RH712A02	DIRECTIONAL VALVE PREFIL PILOT	
Q,R	19	96DH471	COUNTERBALANCE VALVE-SUN BODY	
Q,R	20	96DH471A	CARTRIDGE-COUNTERBAL.SUN	
Q,R	21	96DH410	CART., SUN CHECKVALVE CKCB-XCN	
D,E	22	27E7106	IN-LINE RETURN FILTER	INCLUDED 22A
	22A	27E7106C	EPS-1 - SWITCH=27E7106 STAUFF	PRESSURE SWITCH FOR 22
D,E	22B	30N101	PRESSGAUGE 1/8"BACKCN.0-60PSI	
D	23	27E7106A	FILTER ELEMENT-REPLACEMENT	
E	23	27E7106B	FILTER ELEMENT-STAUFF 25MIC	
	24	27HS091AAU	OIL COOLER 8HP AT 15GPM 50/60	MP1550, MP1603
	24	27HS091A98	OIL COOLER 8HP AT 15GPM 575V	MP1550, MP1603
	24	27HS092AAU	OIL COOLER 20HP AT 10GPM 50/60	MP1604, MP1A03
	24	27HS092A98	OIL COOLER 20HP AT 10GPM 575V	MP1604, MP1A03
P	25	27E5506	GEAR PUMP-RECIRC.PUMP-EATON	
N,O	26	96RH713A01	SUN CARTRIDGE#L0DA-8DN	
N,O	26A	96RH713	DAMAN MANIFOLD C-30448	
N,O	27	96RH713A02	SUN CART&COIL#DAAAMHN211	
	28	09N700B	PRESS TRANDUCER 0-5000PSI 5V	MP1550, MP1603, MP1604, MP1A03
N,O	29	96DH430B	BODY, SUN(STEEL) #EBP/S	
N,O	30	96DH430C	CARTRIDGE, SUN #PBDB-LAN	
N,O	31	30N127W	WIKAGAGE 7/16-20SAE 10000PSI/B	
E	32	27E7112	INTANK RETURN FILTER 1+1/4”	
E	33	27E7112B	FILTER ELEMENT-REPLACEMENT	
E	34	27E7112A	FILTER GAUGE-DONALDSON#P171956	
E	35	27E7112C	ELEC.INDICAT-DONALDSON#P171966	
	36	27E5512	HYD.NOISE SUPPRESSOR-WILKES	OPTIONAL MP1550,MP1603, MP1604, MP1A03
	36A	27E5512A	KIT-NITROGEN CHG-WILKES#SV1KIT	CHARGING KIT

Hydraulic Power Unit Installation

MP1A03CL,CR,L,R

Pellerin Milnor Corporation
P. O. Box 400, Kenner, LA 70063-0400

Litho in U.S.A.

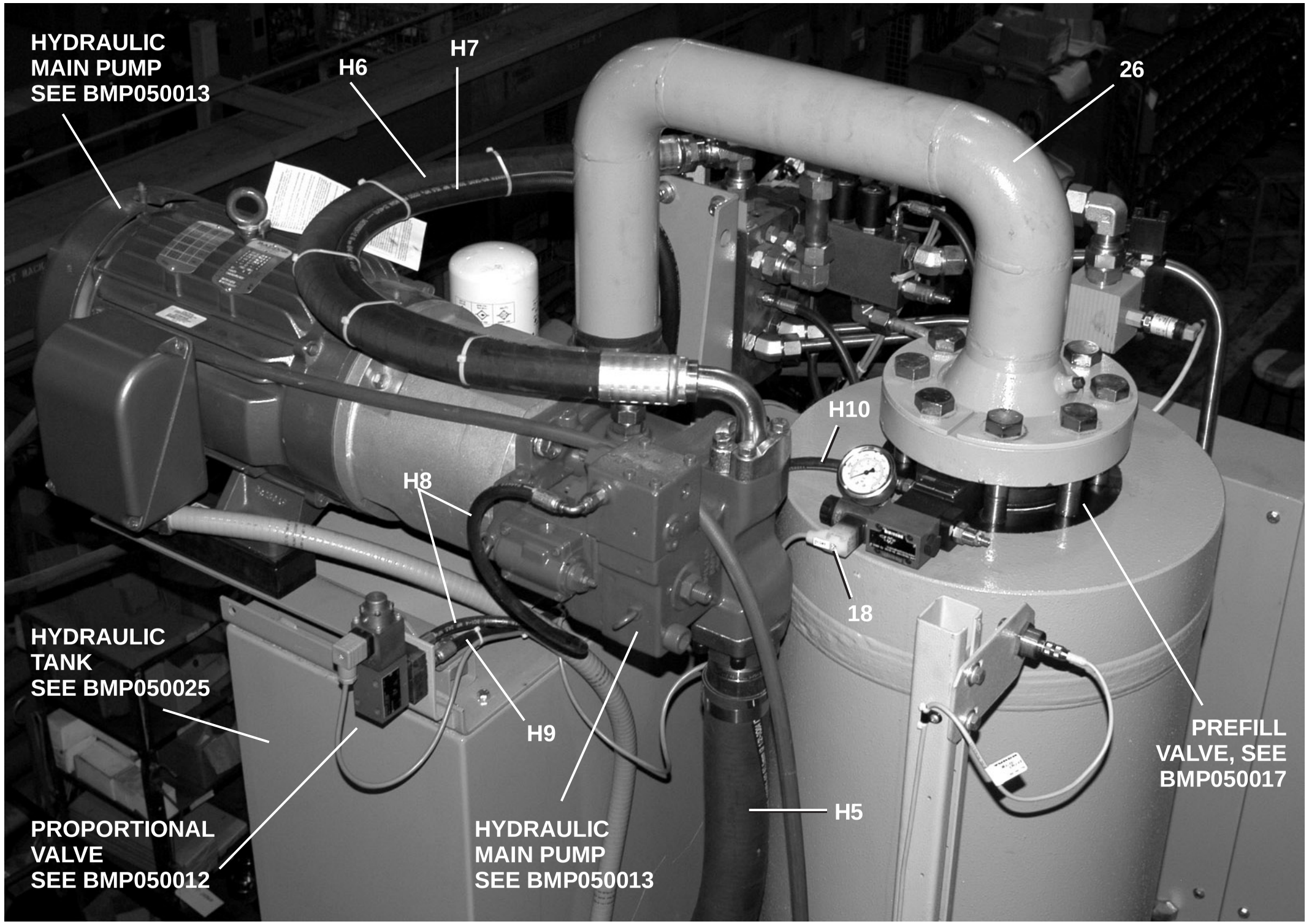

HOSES:

H1	From Prefill to top Main Manifold 3/4” x 28”
H2	From Tank to Recirculation Pump 1”x48”
H3	From Recirculation Pump to Cooler 3/4”x36”
H4	From Cooler to Tank Filter 3/4”x96”
H5	From Tank to Pressure Pump 2.5”x36”
H6	From Pressure Pump to Main Manifold 1.25 x48”
H7	From Pressure Pump to Tank 3/4”x56”
H8	From Pressure Pump to Proportional Valve 1/4”x36”
H9	From Proportional Valve to top Main Manifold 1/4”x40”
H10	From Prefill to bottom Main Manifold 1/4”x36”
H11	From Ram to Tank 1/4” x 108”(9’)
H12	Main System Pressure, 1/4” x 90”
H13	Ram Relief, 1/4”x 90”
H14	Can Relief, 1/4”x 90”
H15	From Side Manifold to Prefill, 1.25”x36”
H16	Prefill Pipe to Tank

Pellerin Milnor Corporation
P. O. Box 400, Kenner, LA 70063-0400

Litho in U.S.A.

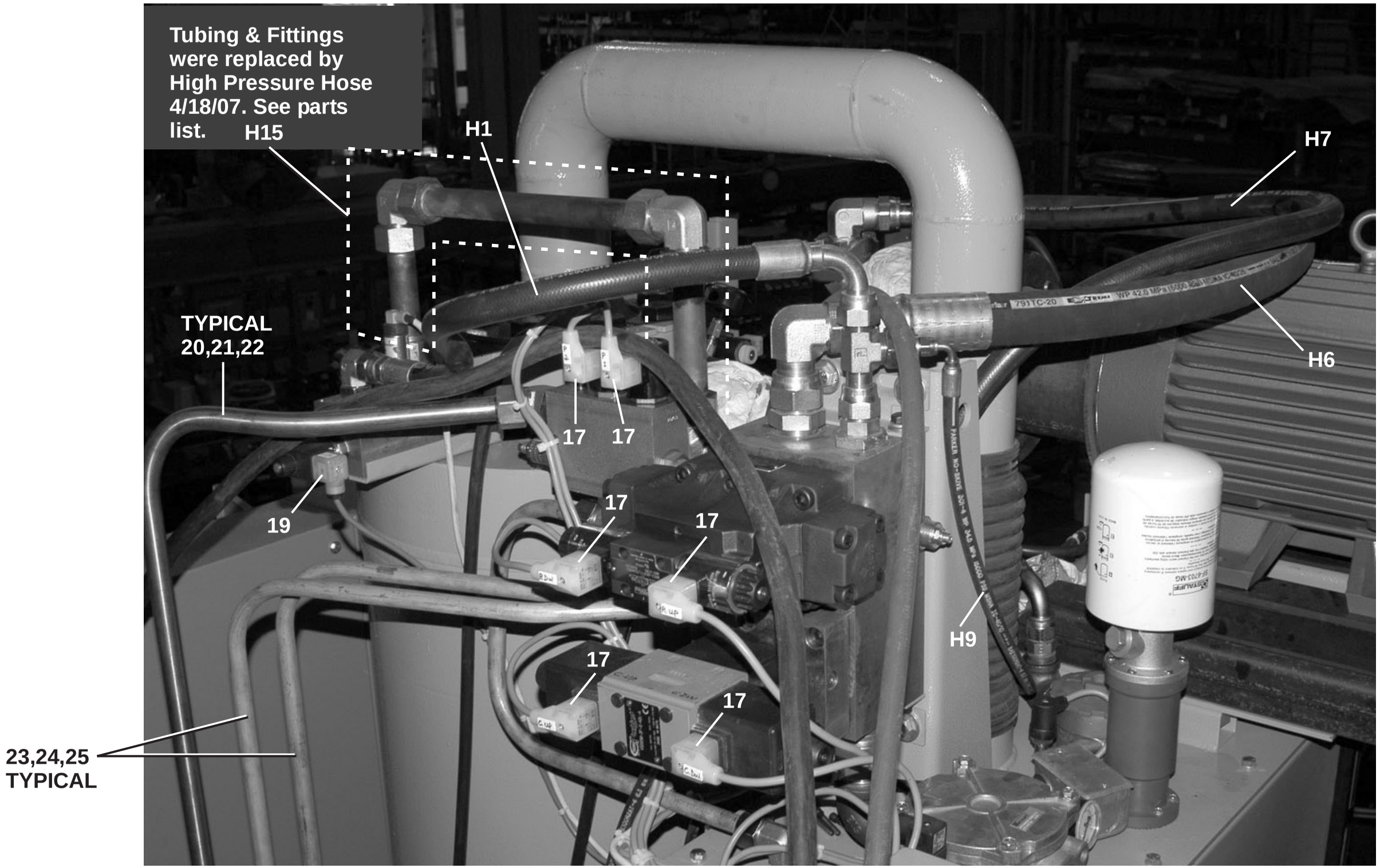

Pellerin Milnor Corporation
P. O. Box 400, Kenner, LA 70063-0400

Litho in U.S.A.

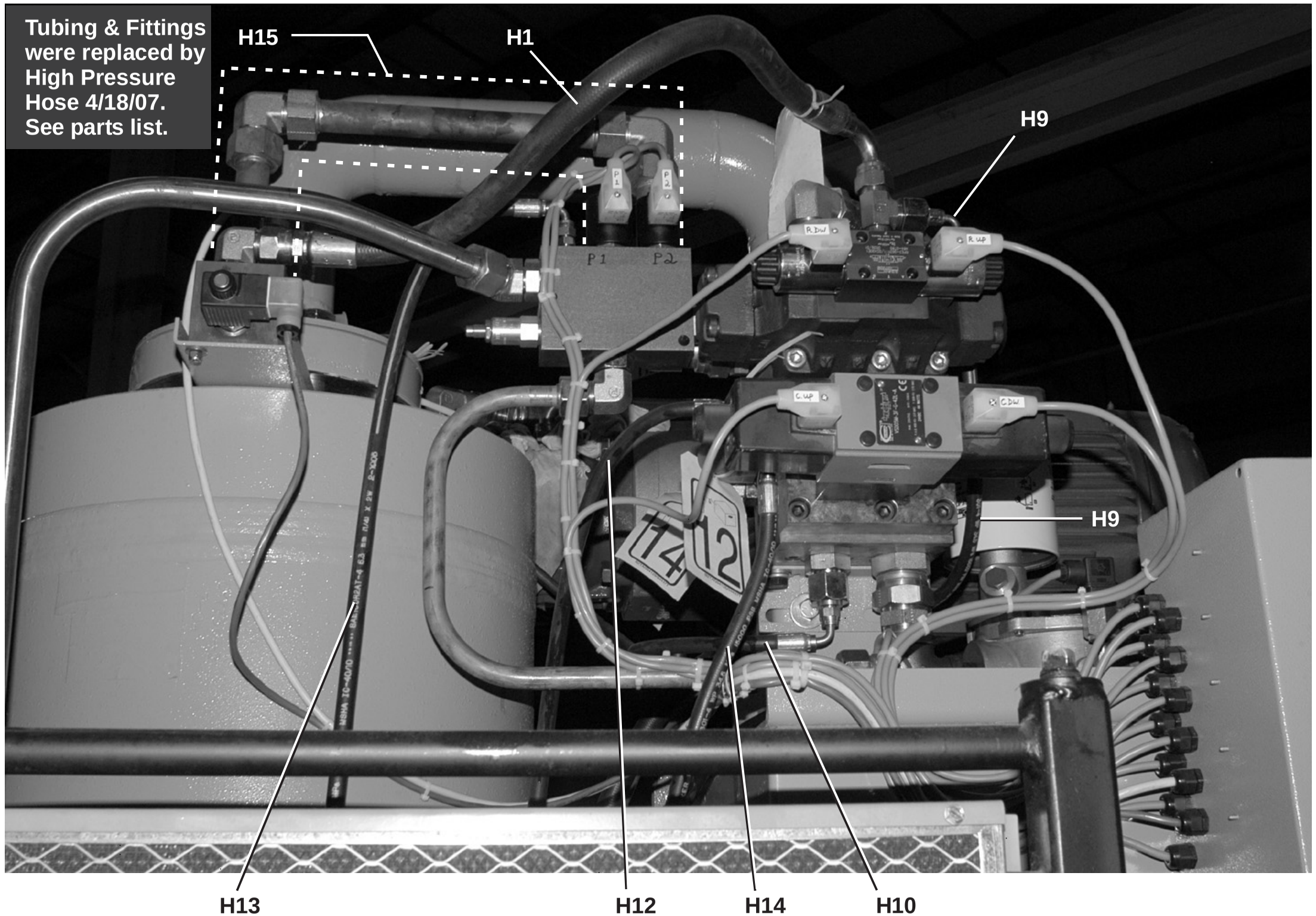

Hydraulic Power Unit Installation

MP1A03CL,CR,L,R

Pellerin Milnor Corporation
P. O. Box 400, Kenner, LA 70063-0400

Litho in U.S.A.

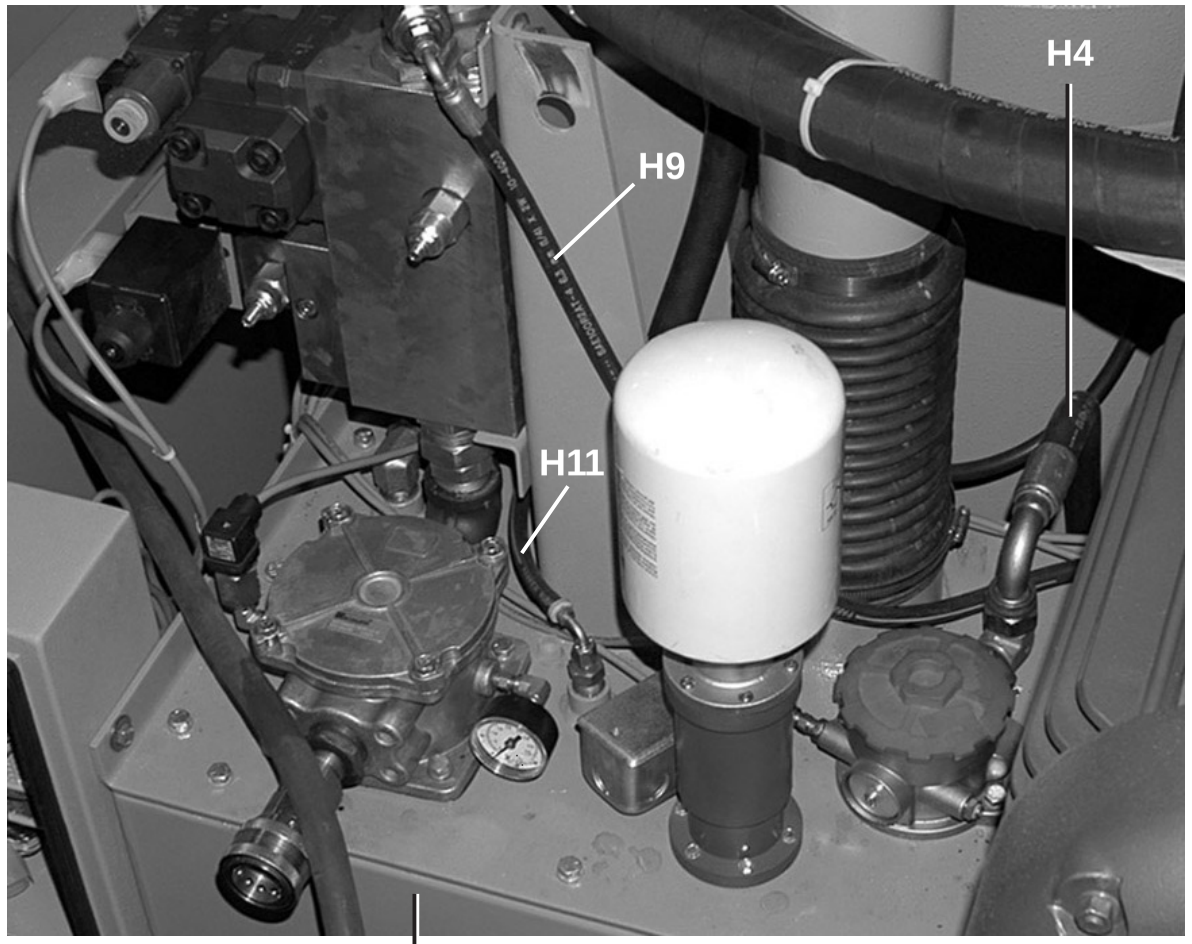

HYDRAULIC TANK
ASSEMBLY
SEE BMP050015

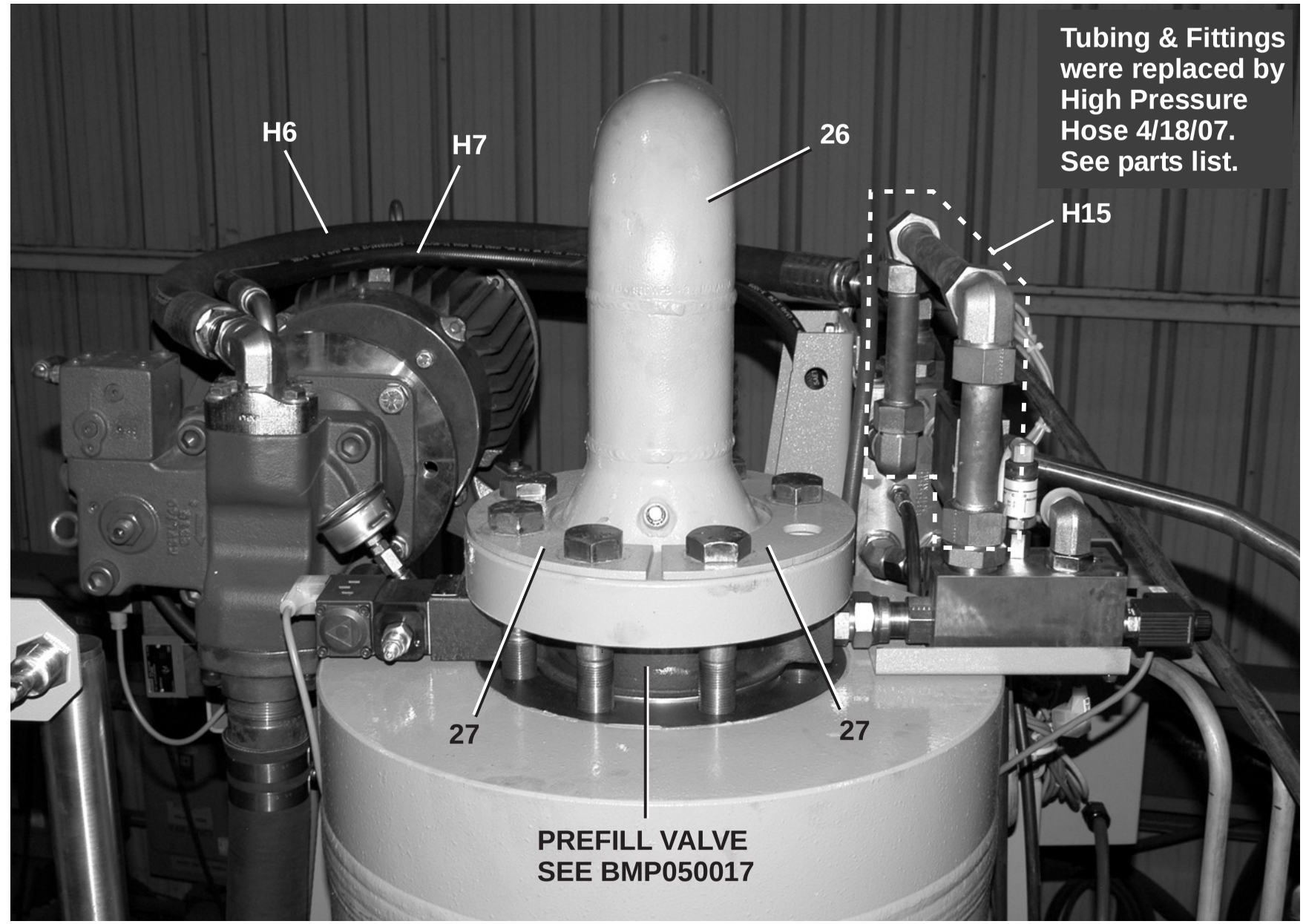

Hydraulic Power Unit Installation

MP1A03CL,CR,L,R

Pellerin Milnor Corporation
P. O. Box 400, Kenner, LA 70063-0400

Litho in U.S.A.

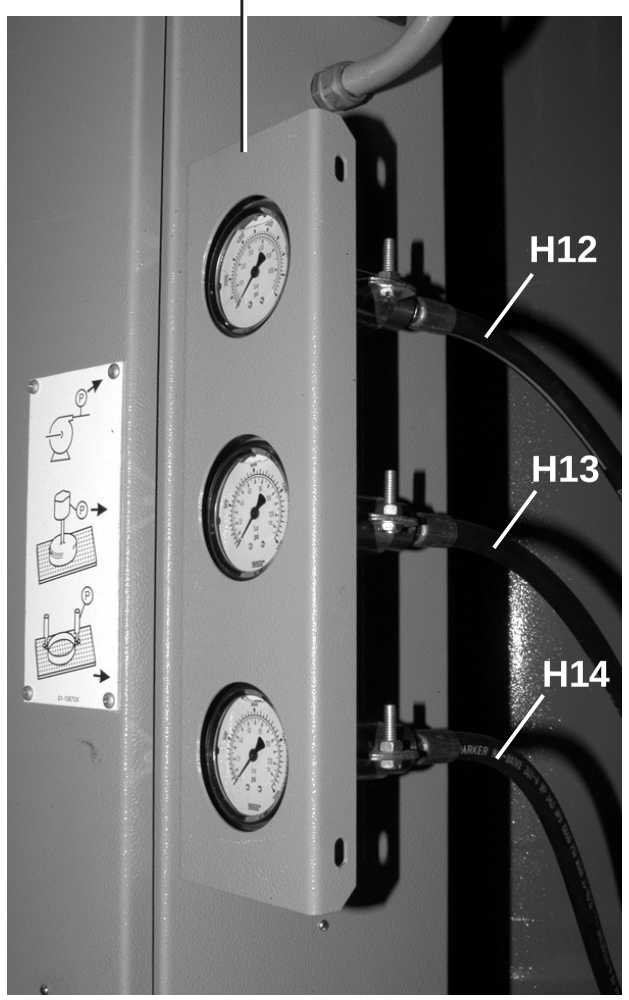

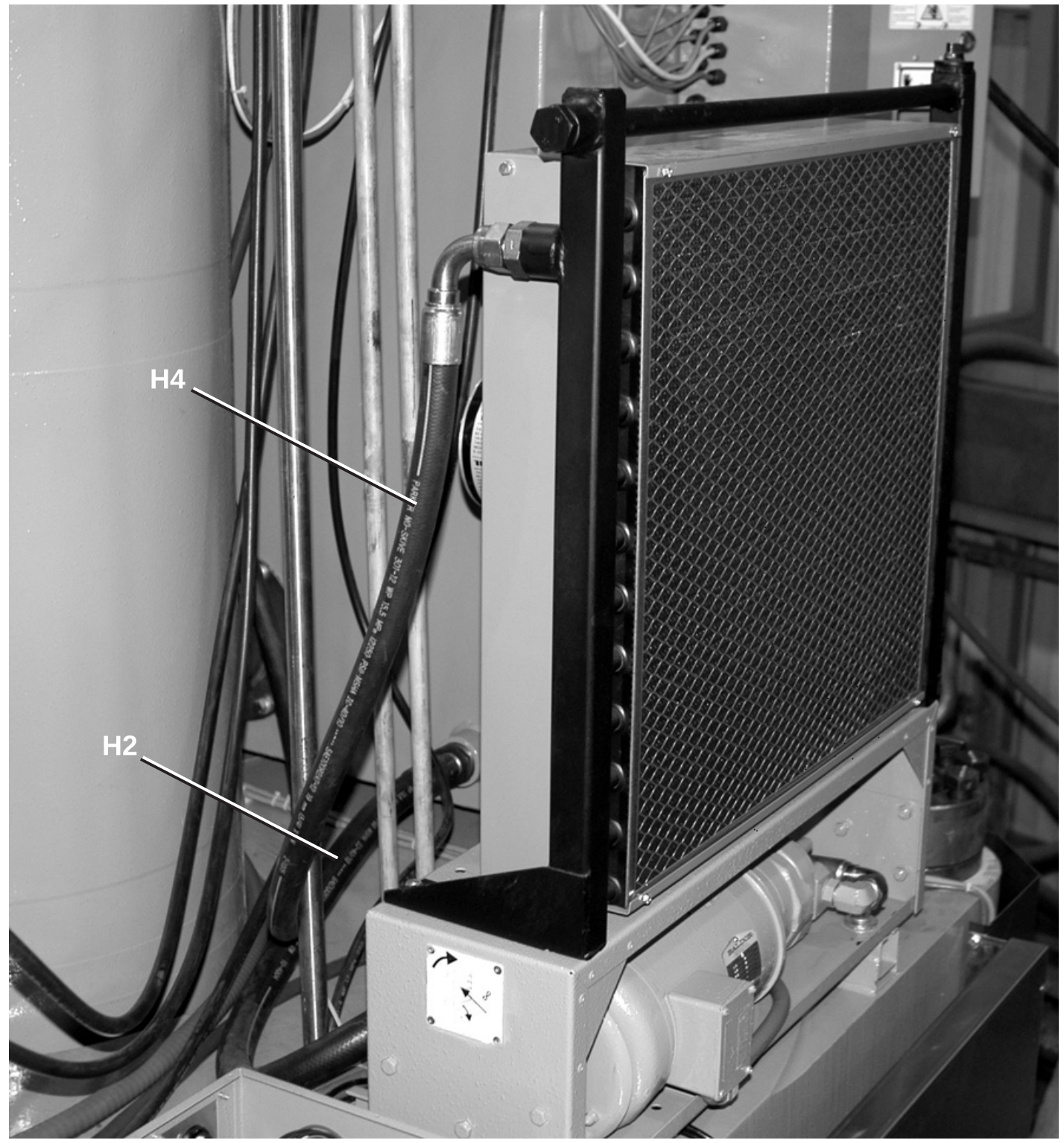

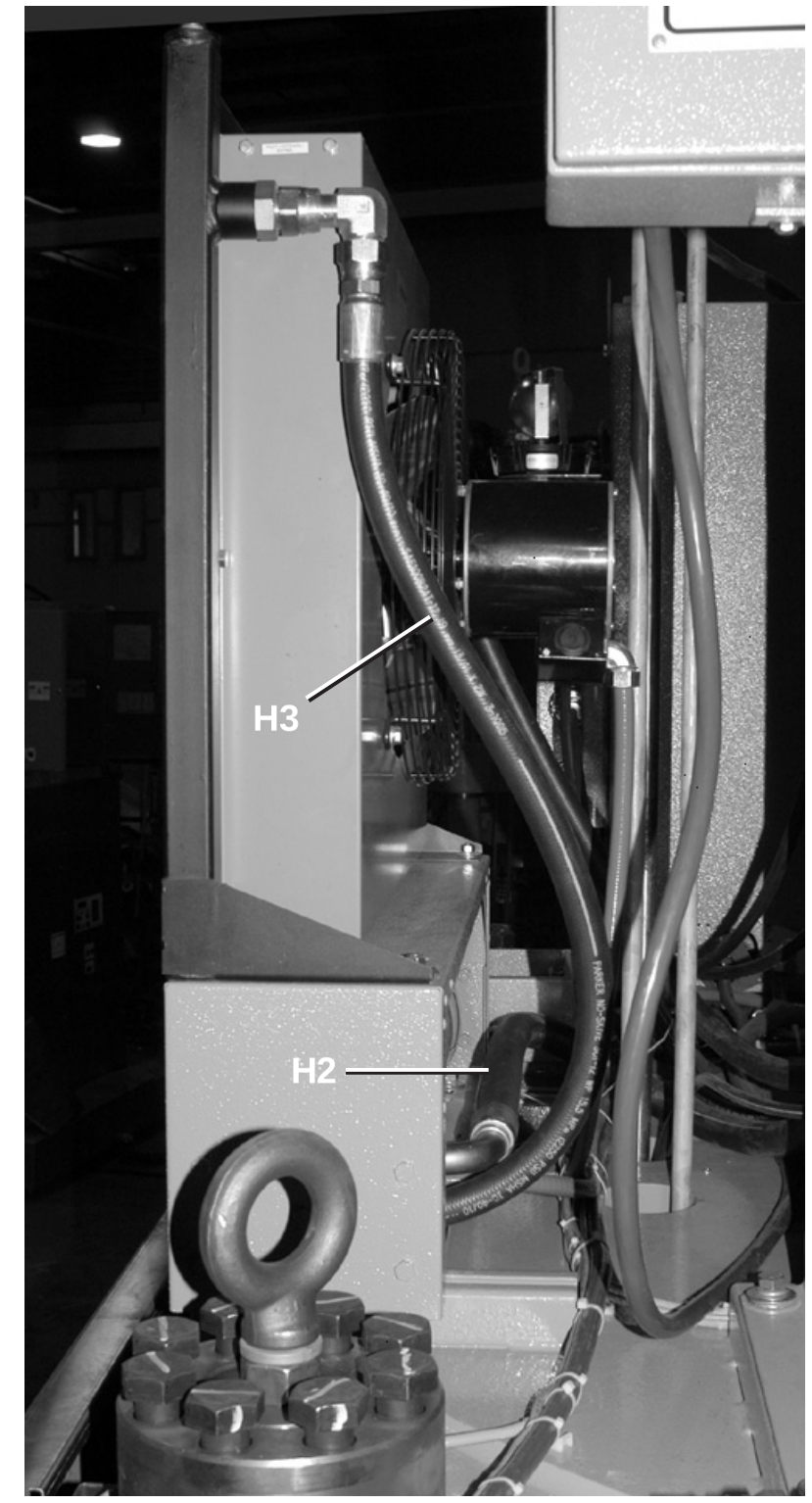

Pellerin Milnor Corporation
P. O. Box 400, Kenner, LA 70063-0400

Litho in U.S.A.

Parts List—Hydraulic Power Unit Installation

Find the correct assembly first, then find the needed components. The item letters (A, B, C, etc.) assigned to assemblies are referred to in the "Used In" column to identify which components belong to an assembly. The item numbers (1, 2, 3, etc.) assigned to components relate the parts list to the illustration.

Used In	Item	Part Number	Description	Comments
			---ASSEMBLIES---	
	A	AHT10034	HYDRAULIC MP1A03-35BAR	
			---COMPONENTS---	
all	1	60EH50C28A	ASSY=HYD HOSE 3/4"X28"LG	
all	2	60EH80C48A	ASSY=HYDRAULIC HOSE 1"X48"LG	LEFT/RIGHT DISCHARGE
all	2	60EH80C48	HYD. HOSE 1"+ENDS = 48"LG	CENTER DISCHARGE
all	3	60EH50C36A	HYD.HOSE 3/4"+90FSWXFORSW=36"	
all	4	60EH50C96A	ASSY=HYDRAULIC HOSE 3/4X96LG	
all	5	60EH96	HYD.HOSE 2+1/2"ID SUCTION100R4	
all	6	60EH84C48A	ASSY=HYDRAULIC HOSE 1.25"X48"L	
all	7	60EH50C56A	HYD.HOSE 3/4"+90FSWXFORSW=56"	
all	8	60EH21C36A	ASSY=HYDRAULIC HOSE 1/4 X36LG	
all	9	60EH21C40A	ASSY=HYDRAULIC HOSE 1/4 X40LG	
all	10	60EH21C36A	ASSY=HYDRAULIC HOSE 1/4 X36LG	
all	11	60E076B108	HOSE ASSY 1/4"X108"LG+ENDS	
all	12	60EH21C90C	ASSY=HYD HOSE 1/4X90 GA MP1A03	
all	13	60EH21C90B	ASSY=HYD HOSE 1/4X90 GA MP1A03	
all	14	60EH21C90B	ASSY=HYD HOSE 1/4X90 GA MP1A03	
all	15	60EH84C36A	ASSY=HYDRAULIC HOSE 1.25"X36"L	
all	16	60E025	4.5"/5.75" X 12"LG.#45A450575	
all	17	12M348V3F	SOLE.CONN.6-48VDC/VAC 2M	
all	18	12M348V9F	SOLE.CONN.6-48VDC/VAC 5M	
all	19	12M3240V6F	SOLE.CONN. 100-240VAC 6 FT.	
all	20	87Z1X095	TUBE 1"ODX.095WL 304SMLS *	
all	21	52ZN1AS001	TUBEFIT 1"NUT #16-BL-S	
all	22	52ZN1AS002	TUBEFIT 1"SLEEVE #16-TPL-S	
all	23	87Z075X095	SS TUBE 3/4"ODX.095 WL304SMLS*	
all	24	52ZN0PS002	TUBEFIT 3/4"SLEEVE #12-TPL-S	
all	25	52ZN0PS001	TUBEFIT 3/4"NUT #12BL-S	
all	26	W7 10288A	PREFILL PIPE 15.63 HT-MP1A03	
all	25	X7 10267	PREFILL PIPE FLANGE WASHER	

Hydraulic Tank Assembly

MP1A03CL,CR,L,R

Pellerin Milnor Corporation
P. O. Box 400, Kenner, LA 70063-0400

Litho in U.S.A.

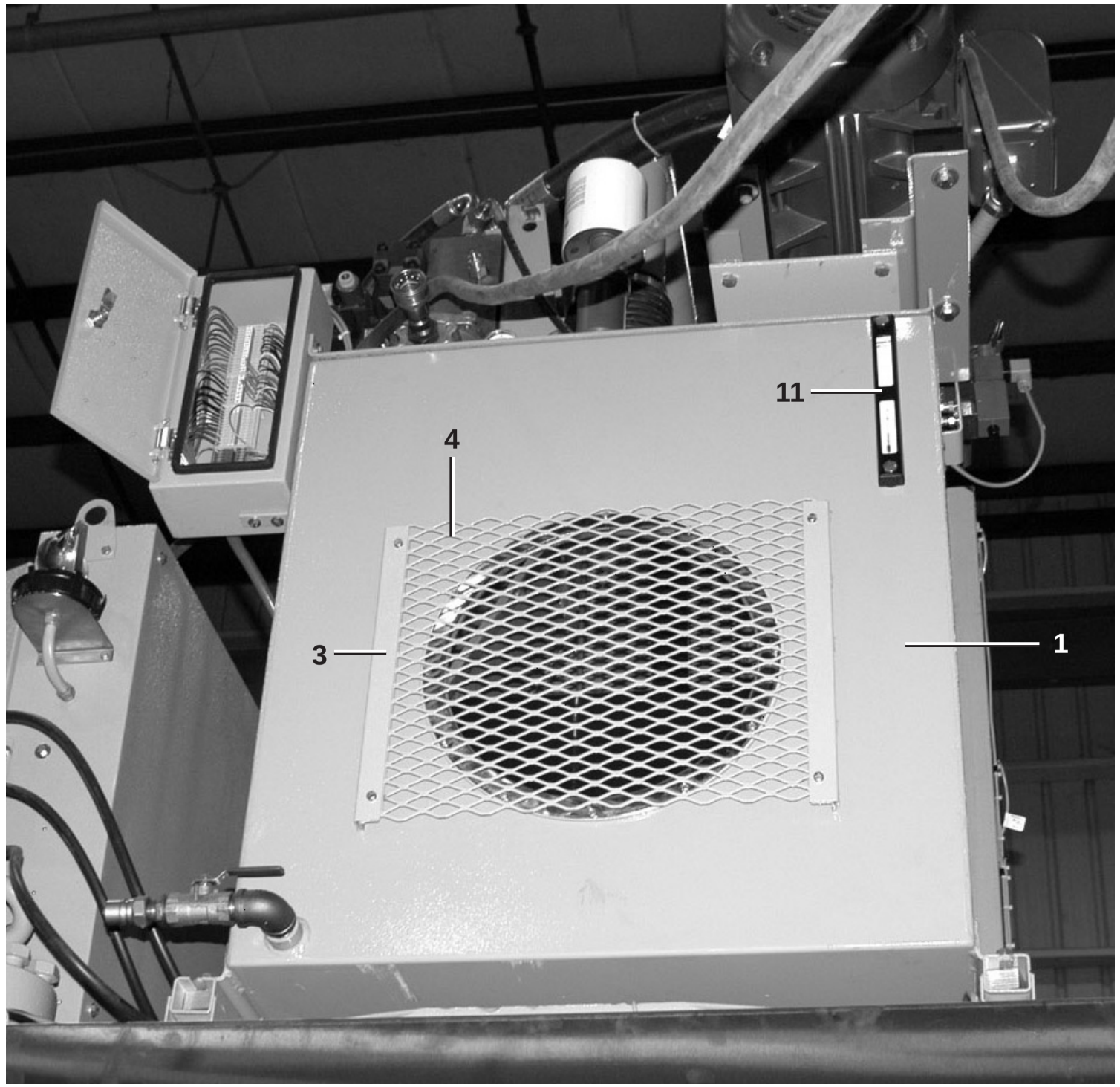

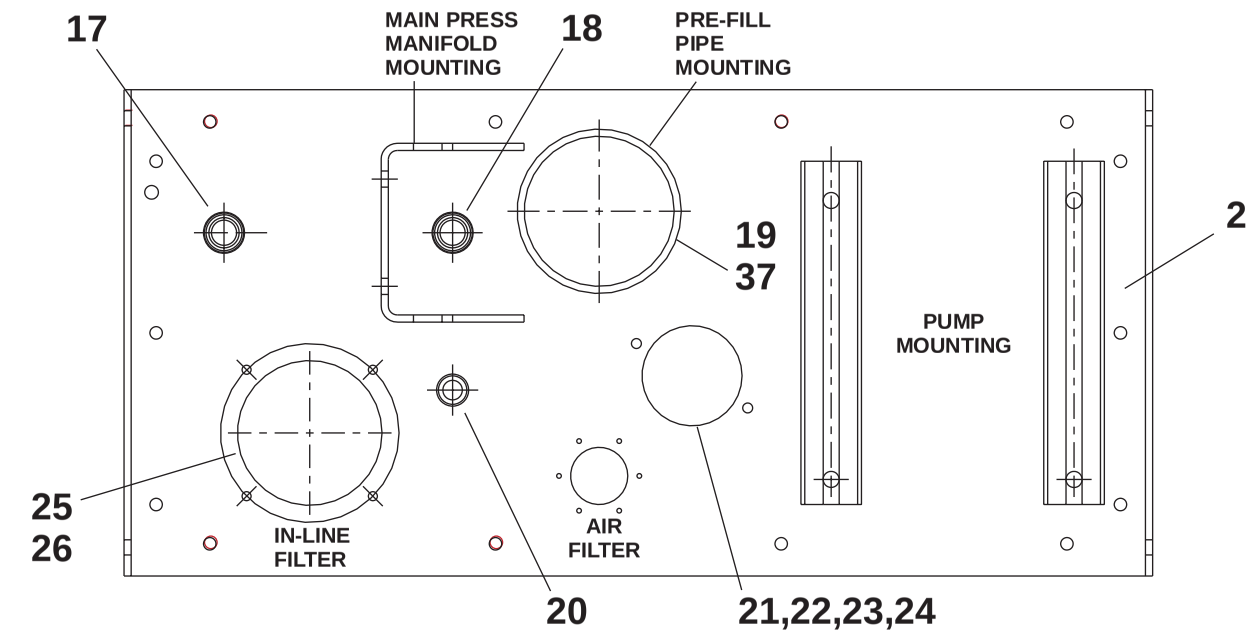

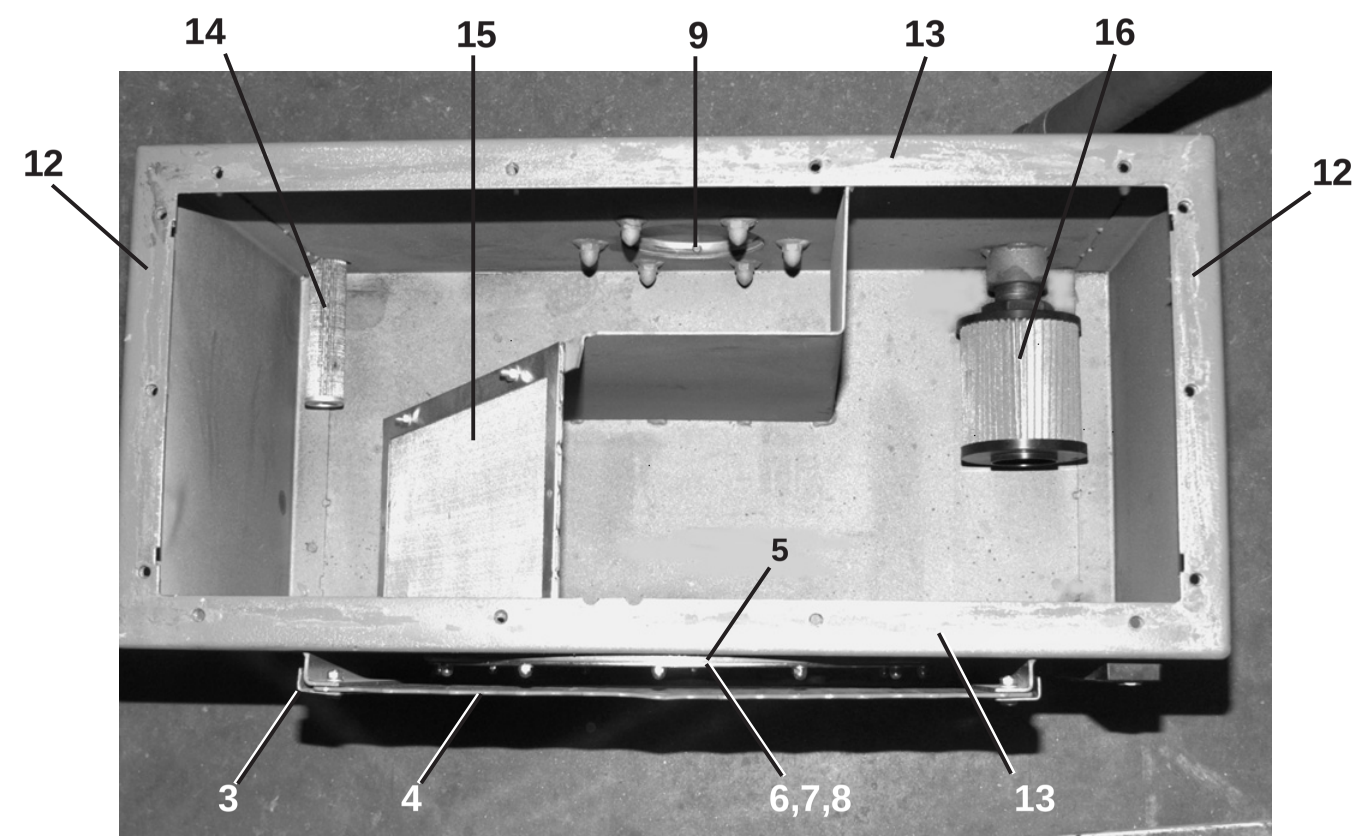

Pellerin Milnor Corporation
P. O. Box 400, Kenner, LA 70063-0400

Litho in U.S.A.

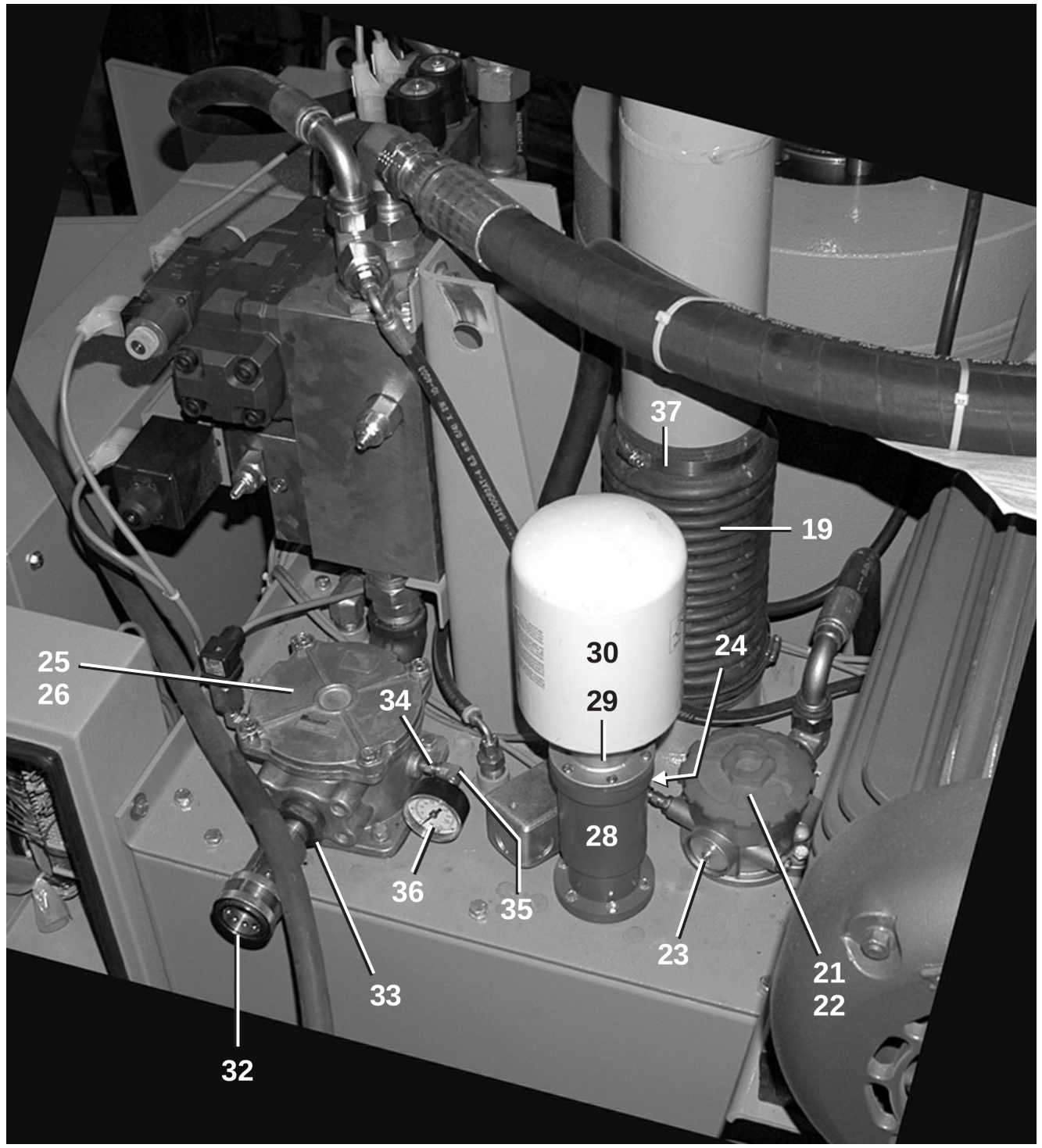

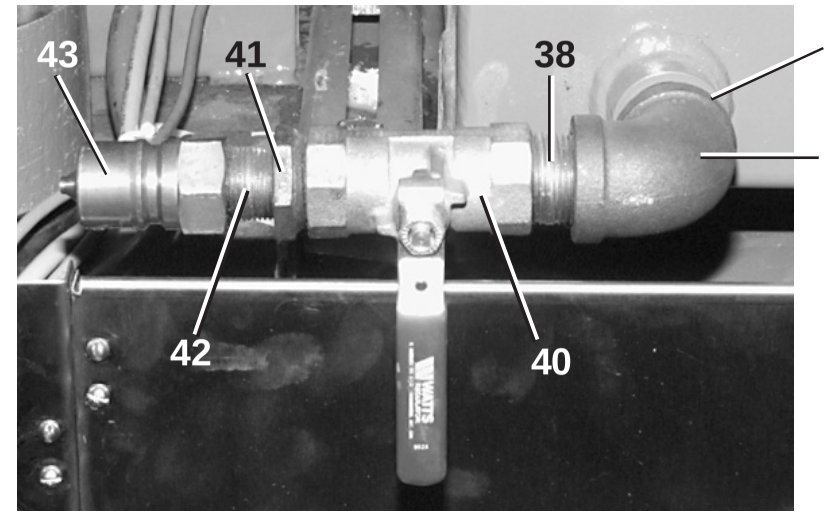

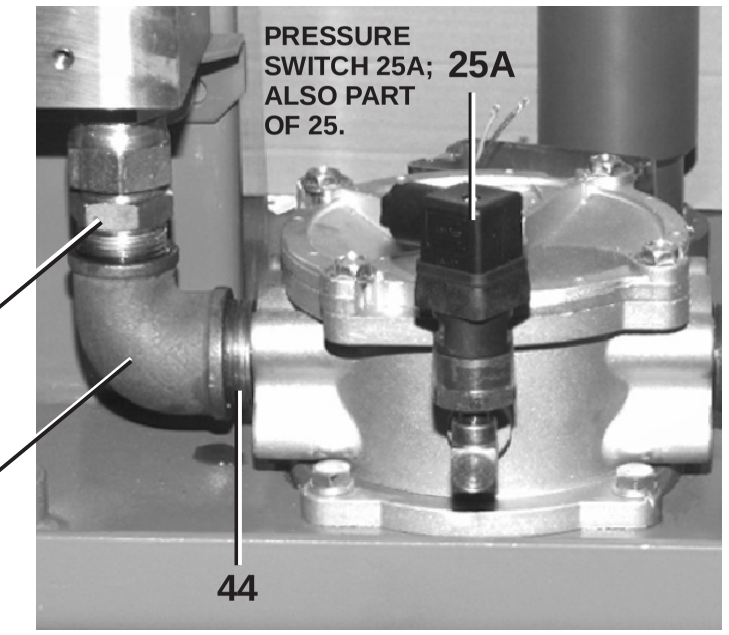

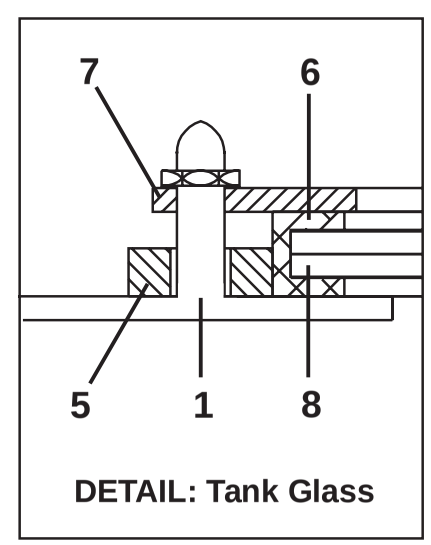

DETAIL: Tank Glass

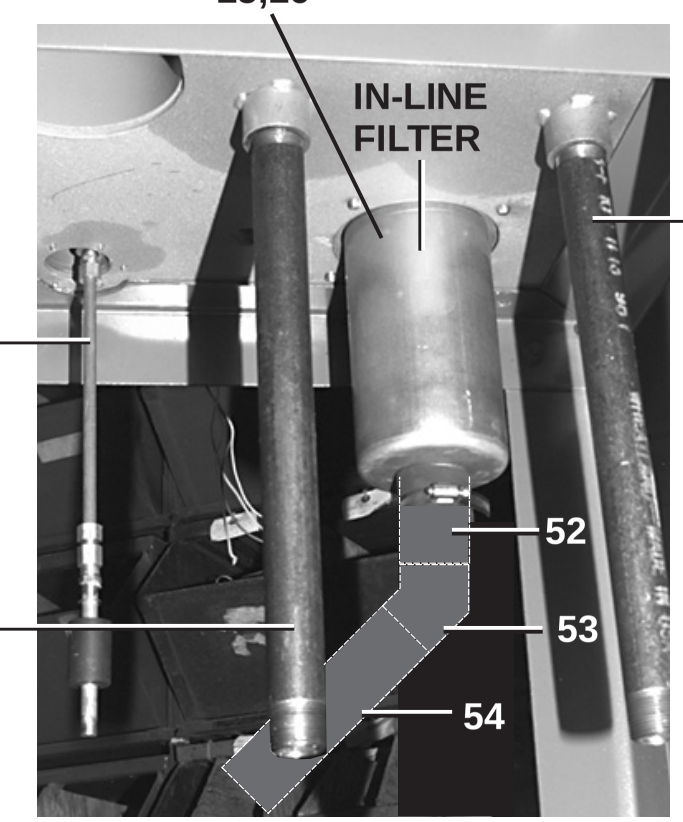

Pellerin Milnor Corporation
P. O. Box 400, Kenner, LA 70063-0400

Litho in U.S.A.

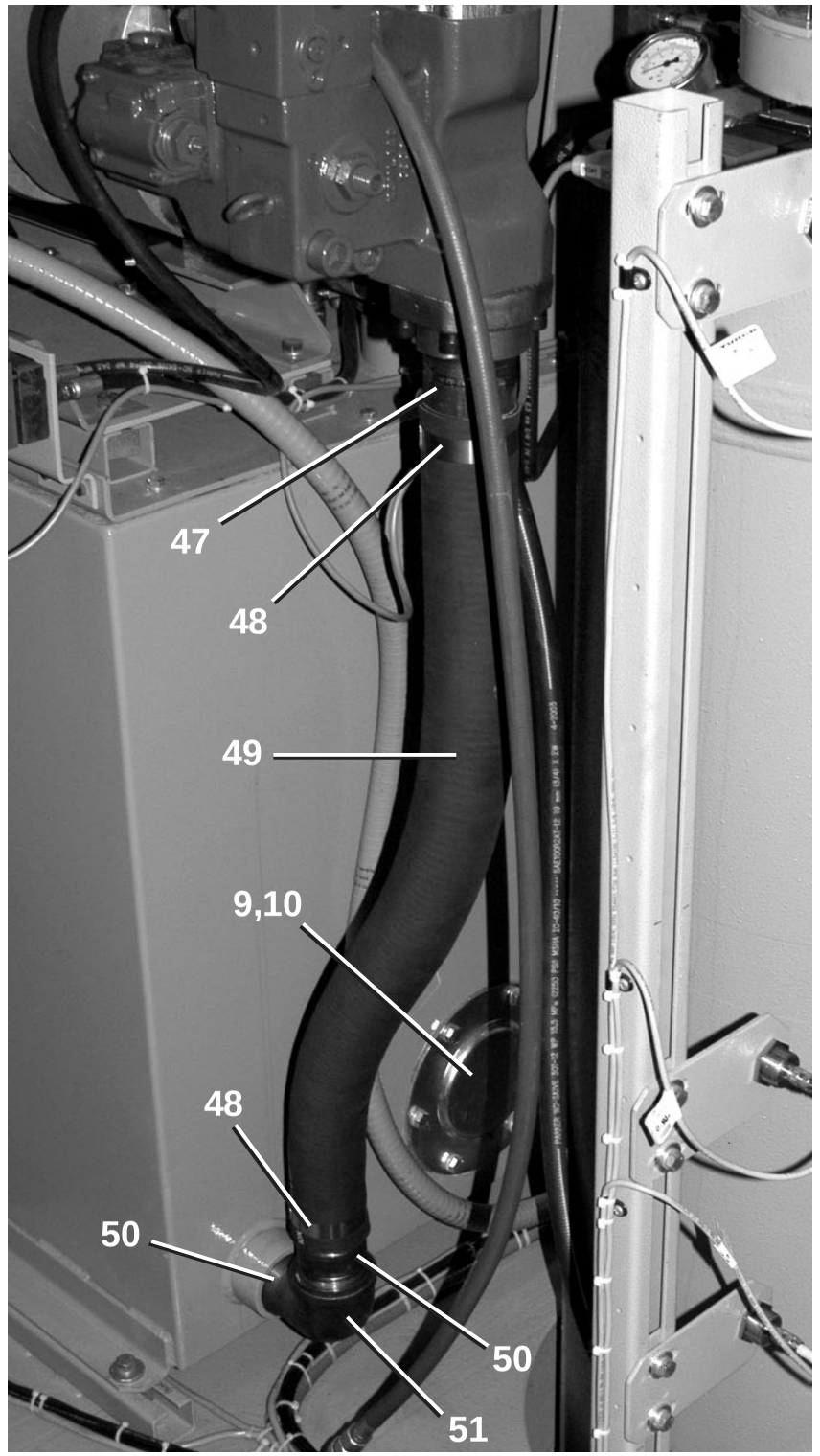

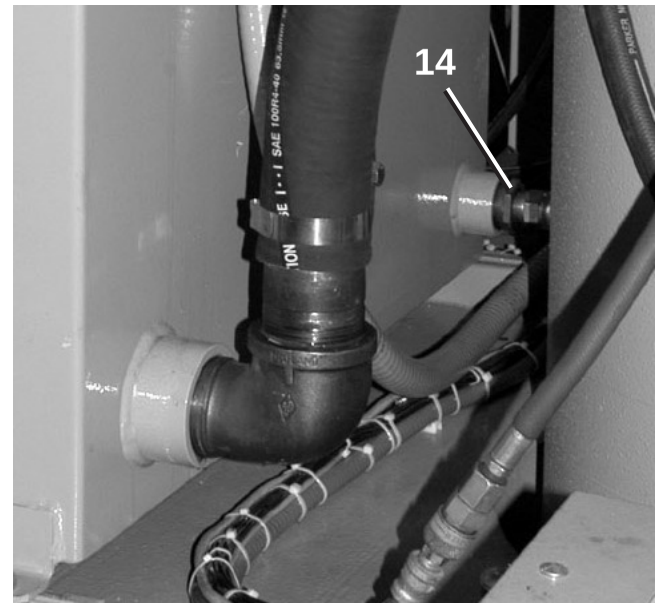

Parts List—Hydraulic Tank Assembly

Find the correct assembly first, then find the needed components. The item letters (A, B, C, etc.) assigned to assemblies are referred to in the "Used In" column to identify which components belong to an assembly. The item numbers (1, 2, 3, etc.) assigned to components relate the parts list to the illustration.

Used In	Item	Part Number	Description	Comments
			----------ASSEMBLIES----------	
	A	AHT10035	OIL RESERVOIR MP1A03-35BAR	
			----------COMPONENTS----------	
all	1	W7 10285	HYD OIL TANK WLMT-MP1A03	
all	2	W7 10223B	OIL RESERVOIR TOP WLMT-MP1A03	
all	3	07 10244	DOOR GLASS COVER ANGLE	
all	4	07 10245	DOOR GLASS COVER	
all	5	X7 10311	DOOR GLASS SPACER -MACHINED	
all	6	02 12054A	DOORGLASS GASKET-NITRILE BLK	
all	7	02 11904P	RING=GLASS RETAINER-4226RWP	
all	8	02 12008	DOORGLASS 17"DIA=4226W DOOR	
all	9	02 18105A	HYD TANK COVER GASKET	
all	10	02 18618	COVER=BEARHOUSE CAD+$18 SU	
all	11	27E7303	LEVEL INDICATOR W/THERM-STAUFF	
all	12	03 16532	HYDR TANK SM TOP GASKET	
all	13	03 16531	HYDR TANK LG TOP GASKET	
all	14	27E7111	SUCT.STRAINER=EZYFLO#S-15-100	
all	15	W7 60256	*COMB AIR SCREEN WLMT 5840GAS	
all	16	27E7114	SUCT.STRAIN.2+1/2"FLOWEZY	
all	17	52ZJ00S007	TUBEFIT90ELFCSL3/4"#12CLO-S	
all	18	52ZC0PS001	TUBEFITSTR3/4"#12-FLO-S	
all	19	60E025	4.5"/5.75" X 12"LG.#45A450575	
all	20	52AY0ER009	STR.1/4"MJICX1/2MP#2404-4-8	
all	21	27E7112	INTANK RETURN FILTER 1+1/4"	
all	22	27E7112B	FILTER ELEMENT-REPLACEMENT	
all	23	27E7112A	FILTER GAUGE-DONALDSON#P171956	
all	24	27E7112C	ELEC.INDICAT-DONALDSON#P171966	
all	25	27E7106	IN-LINE RETURN FILTER	INCLUDES 25A
All	25A	27E7106EPS	INLINE FILTER PRES.SW EPS-1	PRESSURE SWITCH FOR 25
all	26	27E7106B	FILTER ELEMENT-STAUFF 25MIC	
all	26	27E7106A	FILTER ELEMENT-REPLACEMENT	

Pellerin Milnor Corporation
P. O. Box 400, Kenner, LA 70063-0400

Litho in U.S.A.

Parts List—Hydraulic Tank Assembly

Find the correct assembly first, then find the needed components. The item letters (A, B, C, etc.) assigned to assemblies are referred to in the "Used In" column to identify which components belong to an assembly. The item numbers (1, 2, 3, etc.) assigned to components relate the parts list to the illustration.

Used In	Item	Part Number	Description	Comments
all	28	27E7200	TEMPLEVEL/FILLER INDICATOR-KIP	
all	29	27E7202	AIR FILTER ADAPTER	
all	30	27E7104	AIR FILTER ELEMENT-SF6704MG	
all	31	5N0P22AF41	NPT NIP 3/4X22 TOE BLKSTL SK40	
all	32	52XY0BP00X	3/4"QUICK DISCONN.FEM #H6-62	
all	33	5SB1E0PMFO	NPTHEXBUSH 1.25X3/4 BLKML 150#	
all	34	52LY0CR001	HEXPIPNIP 1/8"XCLOSE#5404-2-2	
all	35	52JY0CR001	ELBOW 1/8"FEM.#5504-02-02	
all	36	30N101	PRESSGAUGE 1/8"BACKCN.0-60PSI	
all	37	27A086	HOSECLAMP 3+1/8-6"CADSCR#HS-88	
all	38	5N1ACLSF42	NPT NIP 1X CLS TBE BLKSTL SK40	
all	39	5SL1AMFA	NPT ELBOW 90DEG 1" BLKMAL 150#	
all	40	96D084	BALL VALVE 1" WATTS#B6100 BRZ	
all	41	5SB1A0PFEO	NPTHEXBUSH 1X3/4 BLKSTL 125#	
all	42	5N0PCLSF42	NPT NIP 3/4XCLS TBE BLKSTLSK40	
all	43	52XY0BP00Y	3/4"QUICK DISCONN.MALE#H6-63	
all	44	5N1ECLSF42	NPT NIP 1.25XCLS TBE BLKSTLS40	
all	45	5SL1EMFA	NPTELB 90DEG 1.25 BLKMAL 150#	
all	46	52ZX00S010	TUBEFITMALCN1.25#20-FTX-S	
all	47	51E098C	KINGCOMNIP 2.5"IDXNPT #ST30	
all	48	27A074	HOSECLAMP 2+1/16-3"CADSC#62040	
all	49	60EH96	HYD.HOSE 2+1/2"ID SUCTION100R4	
all	50	5N2KCLSB42	NPTNIP 2.5XCLS TBE BLKSTL SK40	
all	51	5SL2KMFC	NPTELB 90DEG STR 2.5 BLKM150#	
all	52	5N1K05KF42	NPT NIPPLE 1.5X5.5 TBE BLKSTL	
all	53	5SL1KMFK	NPT ELBOW 45DEG 1.5" BLK	
all	54	5N1K11AF42	NPT NIPPLE 1.5X11 TBE BLKSTL	
.				

Proportional Valve

MP1A03CL,CR,L,R

Pellerin Milnor Corporation
P. O. Box 400, Kenner, LA 70063-0400

Litho in U.S.A.

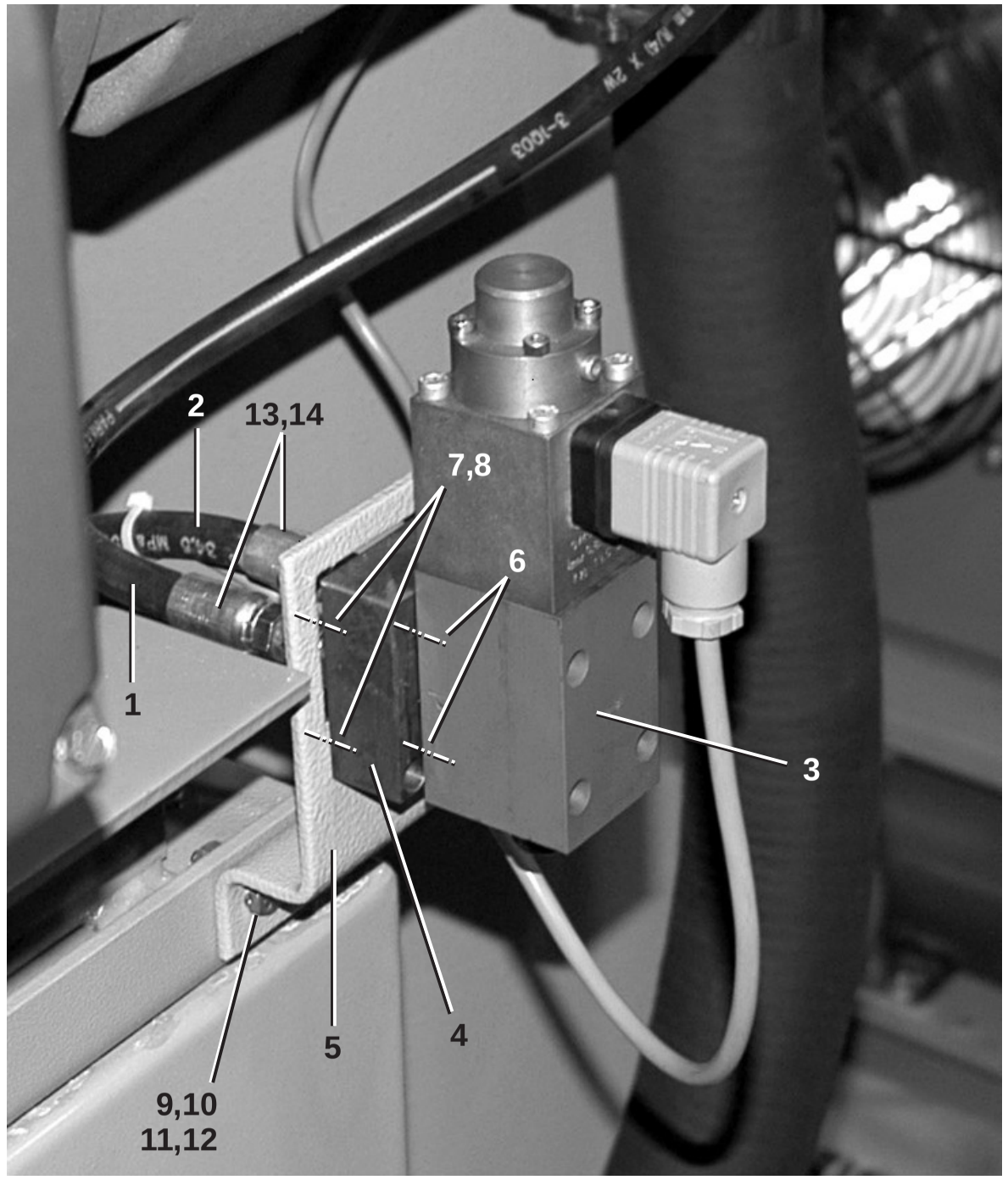

Parts List—Proportional Valve

Find the correct assembly first, then find the needed components. The item letters (A, B, C, etc.) assigned to assemblies are referred to in the "Used In" column to identify which components belong to an assembly. The item numbers (1, 2, 3, etc.) assigned to components relate the parts list to the illustration.

Used In	Item	Part Number	Description	Comments
			----------ASSEMBLIES----------	
	A	AHT10007A	PROPOR'L VALVE ASSY-MP1A03	
			----------COMPONENTS----------	
all	1	60EH21C36A	ASSY=HYDRAULIC HOSE 1/4 X36LG	
all	2	60EH21C40A	ASSY=HYDRAULIC HOSE 1/4 X40LG	
all	3	96RH708E38	PROP.RELIEF VALVE 6X DESIGN	
all	4	96DH457A	SUBPLATE D03-DAMAN#DD03SPB6S	
all	5	07 10279	SUBPLATE MTG BRKT	
all	6	15K022A	SOKCAPSCR10-24X1.25BLKGR8	
all	7	15K041E	SKCPSCR 1/4-20X1+1/4"BLK	
all	8	15G166A	HXLOKNUT NYL1/4-20 UNC2A STL/Z	
all	9	15K065	HEXCAPSCR 5/16-18UNC2AX1 GR5 Z	
all	10	15G185	HXNUT 5/16-18UNC2B SAE ZINC GR	
all	11	15U200	FLATWASHER(USS STD) 5/16"ZNC P	
all	12	15U210	LOKWASHER MEDIUM 5/16 ZINCPL	
all	13	52ZC0ES003	TUBEFITSTR1/4X3/8#4-6F50LO-S	
all	14	52PY0GR001	HEXPLUG 3/8"OR#6408-H06-0	

Main Press Manifold

MP1A03CL,CR,L,R

Pellerin Milnor Corporation
P. O. Box 400, Kenner, LA 70063-0400

Litho in U.S.A.

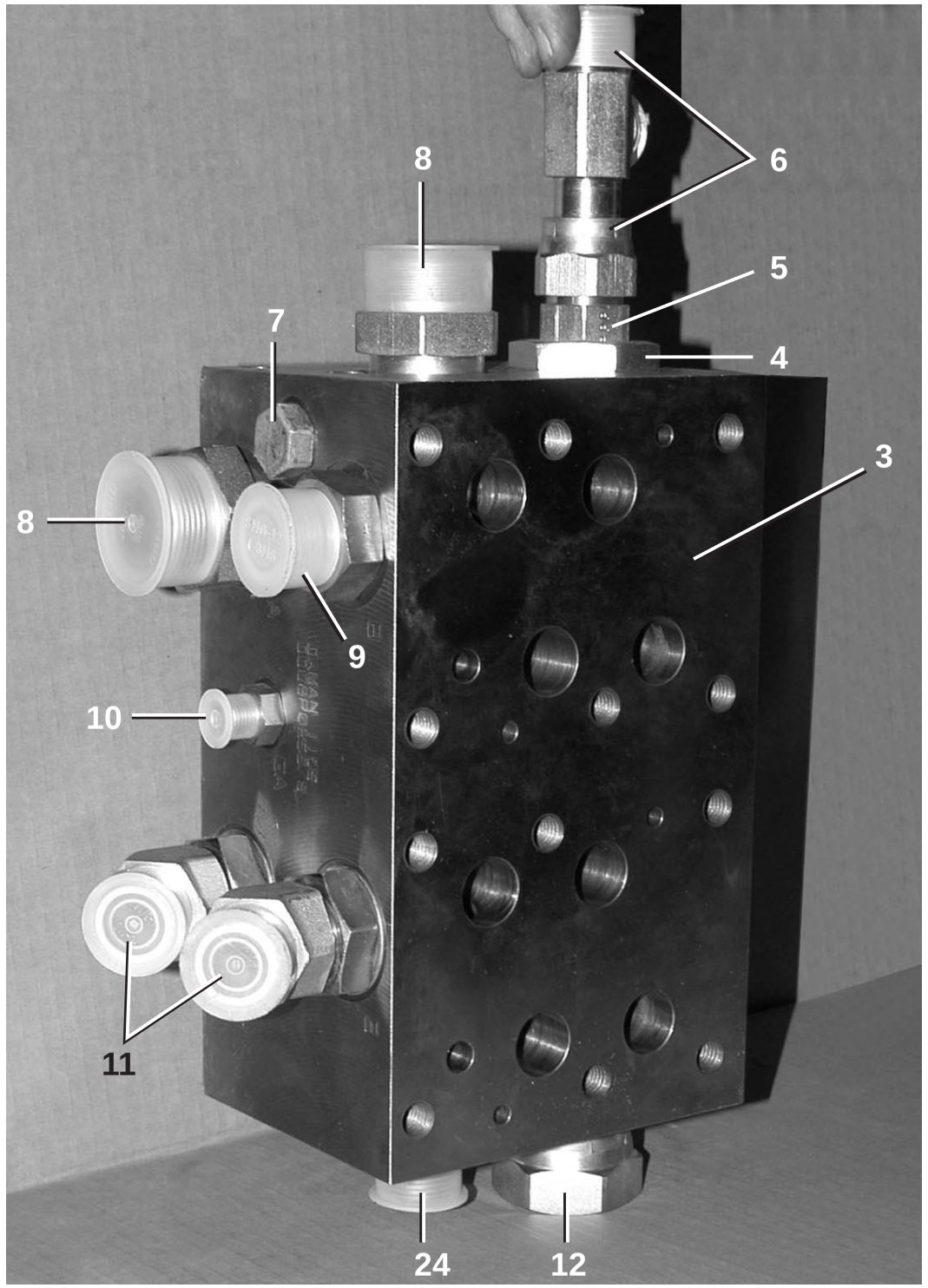

MAIN MANIFOLD BLOCK

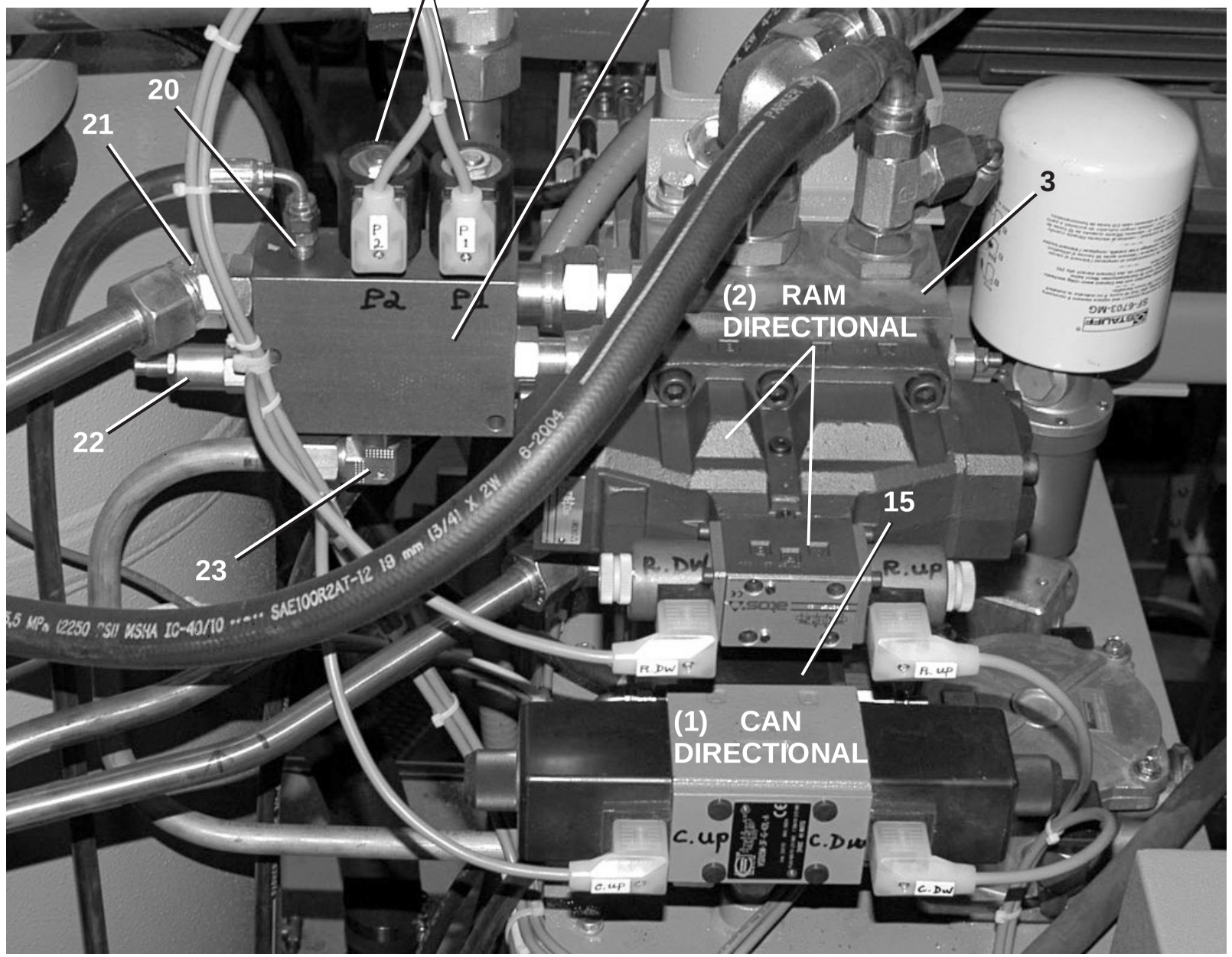

Main Press Manifold

MP1A03CL,CR,L,R

Pellerin Milnor Corporation
P. O. Box 400, Kenner, LA 70063-0400

Litho in U.S.A.

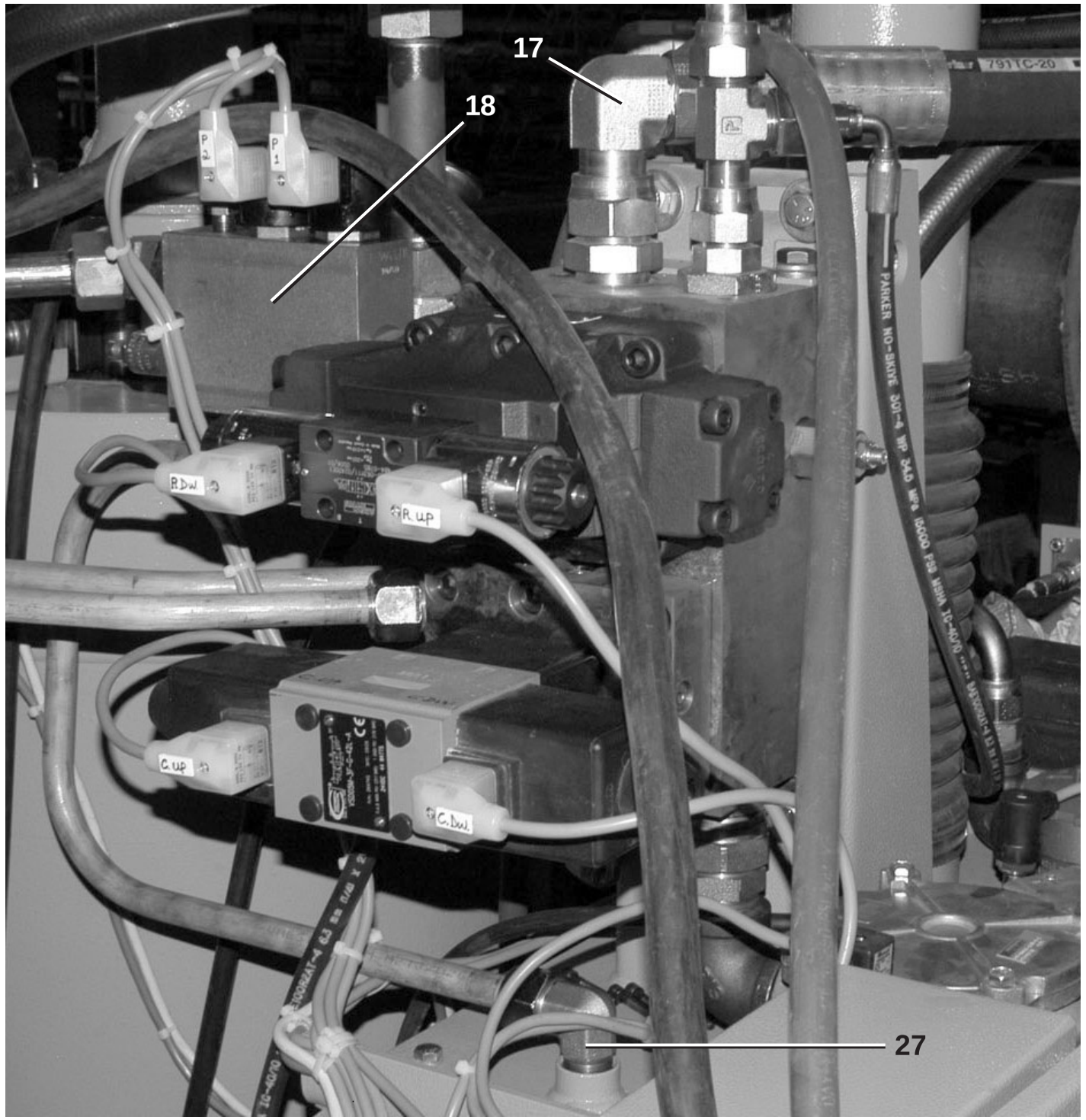

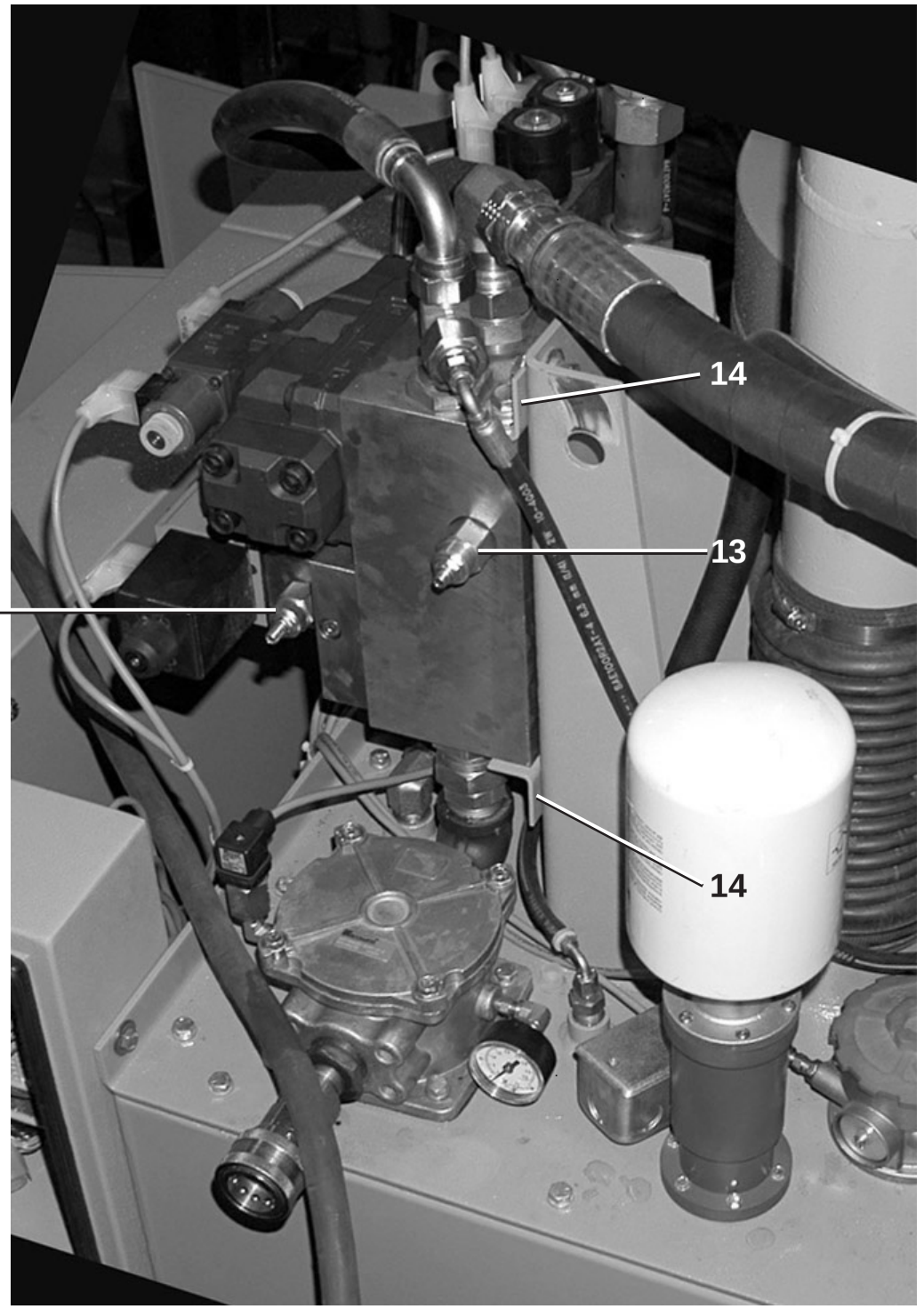

Main Press Manifold

MP1A03CL,CR,L,R

Pellerin Milnor Corporation
P. O. Box 400, Kenner, LA 70063-0400

Litho in U.S.A.

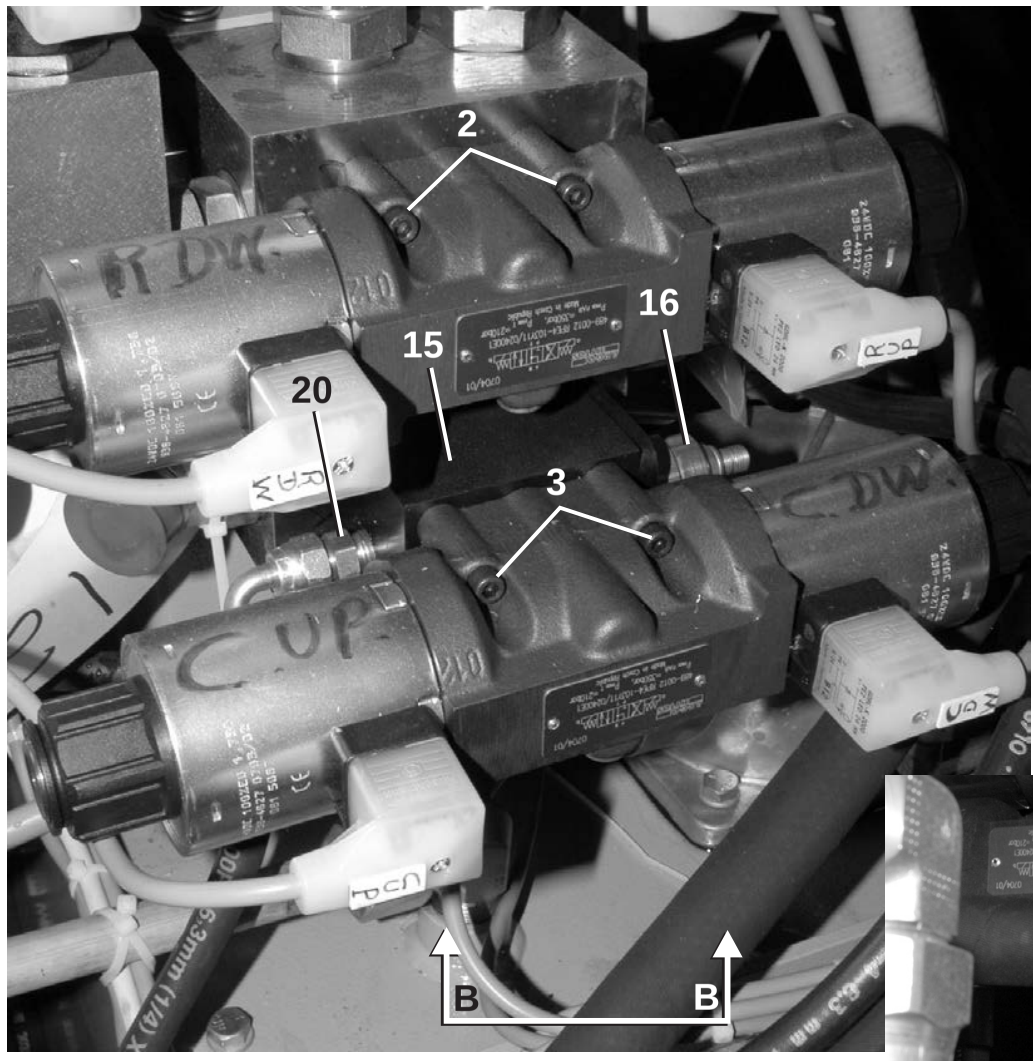

VIEW A-A:

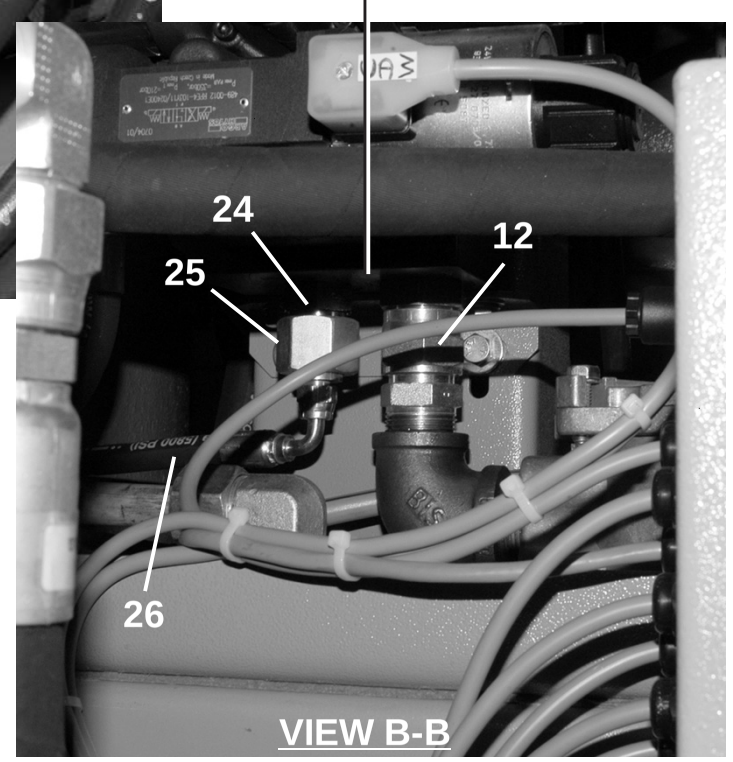

VIEW B-B

Parts List—Main Manifold MP1A03

Find the correct assembly first, then find the needed components. The item letters (A, B, C, etc.) assigned to assemblies are referred to in the "Used In" column to identify which components belong to an assembly. The item numbers (1, 2, 3, etc.) assigned to components relate the parts list to the illustration.

Used In	Item	Part Number	Description	Comments
			----------ASSEMBLIES----------	
	A	AHT10002E	MAIN PRESS MANIFOLD-MP1A03	
			----------COMPONENTS----------	
all	1	96RH709E37	DIRECT.VALVE CENTER OP 24VDC	
all	2	96RH720	DIRECT.CONT.VLV.ATOS (D08)	
all	3	96DH485	MANIFOLD-DAMAN DD08P025S/S	
all	4	96DH485A	DAMAN ADAPTOR #DD05D08VAAB	
all	5	52ZC00S003	TUBEFIT STRTHDCN3/4"#12F50L0-S	
all	6	52ZT00S001	TUBEFIT TEESWNUT 3/4"FACESL OR	
all	7	52PY0GR001	HEXPLUG 3/8"OR#6408-H06-0	
all	8	52ZC1ES002	TUBEFITSTRTH1.25X1#20-16F50L0S	
all	9	52ZC00S004	TUBESTRCON3/4X1"OR#12-16F50L0S	
all	10	52ZC0ES003	TUBEFITSTR1/4X3/8#4-6F50LO-S	
all	11	52ZJ0PS001	TUBEFIT45EL3/4"X1"#12-16V50L0S	
all	12	52ZX00S010	TUBEFITMALCN1.25#20-FTX-S	
all	13	96DH440A	CARTRIDGE,DIRECT RELIEF VALVE	
all	14	07 10410	PRESSURE MANIFOLD MTG MP1A03	
all	15	96DH475	PRESS.REDUCING VLV-SUN=BODY	
all	16	96DH475A	CARTRIDGE,PRESS.REDUCING VALVE	
all	17	52ZJ1ES001	TUBEFIT90ELSWNT 1.25"#20C6LO-S	
all	18	96DH452	MANIFOLD, MACH-V	
all	19	96DH452A01	POPPET=COIL + CARTRIDGE	
all	20	52AY0ER011	STRCONSEALOC 1/4"#4-F50LO-S	
all	21	52ZJ1AS001	TUBEFIT45EL #16-12V50L0-S	
all	22	96DH452A02	CARTRIDGE,RELIEF CARTRIDGE VLV	
all	23	52ZJ00S011	TUBEFIT90EL3/4"FACESEAL ORING	
all	24	52ZL00S006	TUBEFITENDRED3/4TX1/4T FACESL	
all	25	52ZC1AS006	TUBEFITSTR1X3/4#16-12F50LO-S	
all	26	60EH21C36A	ASSY=HYDRAULIC HOSE 1/4 X36LG	
all	27	52ZJ00S007	TUBEFIT90ELFCSL3/4"#12CLO-S	

Hydraulic Main Pump Assembly

MP1A03CL,CR,L,R

Pellerin Milnor Corporation
P. O. Box 400, Kenner, LA 70063-0400

Litho in U.S.A.

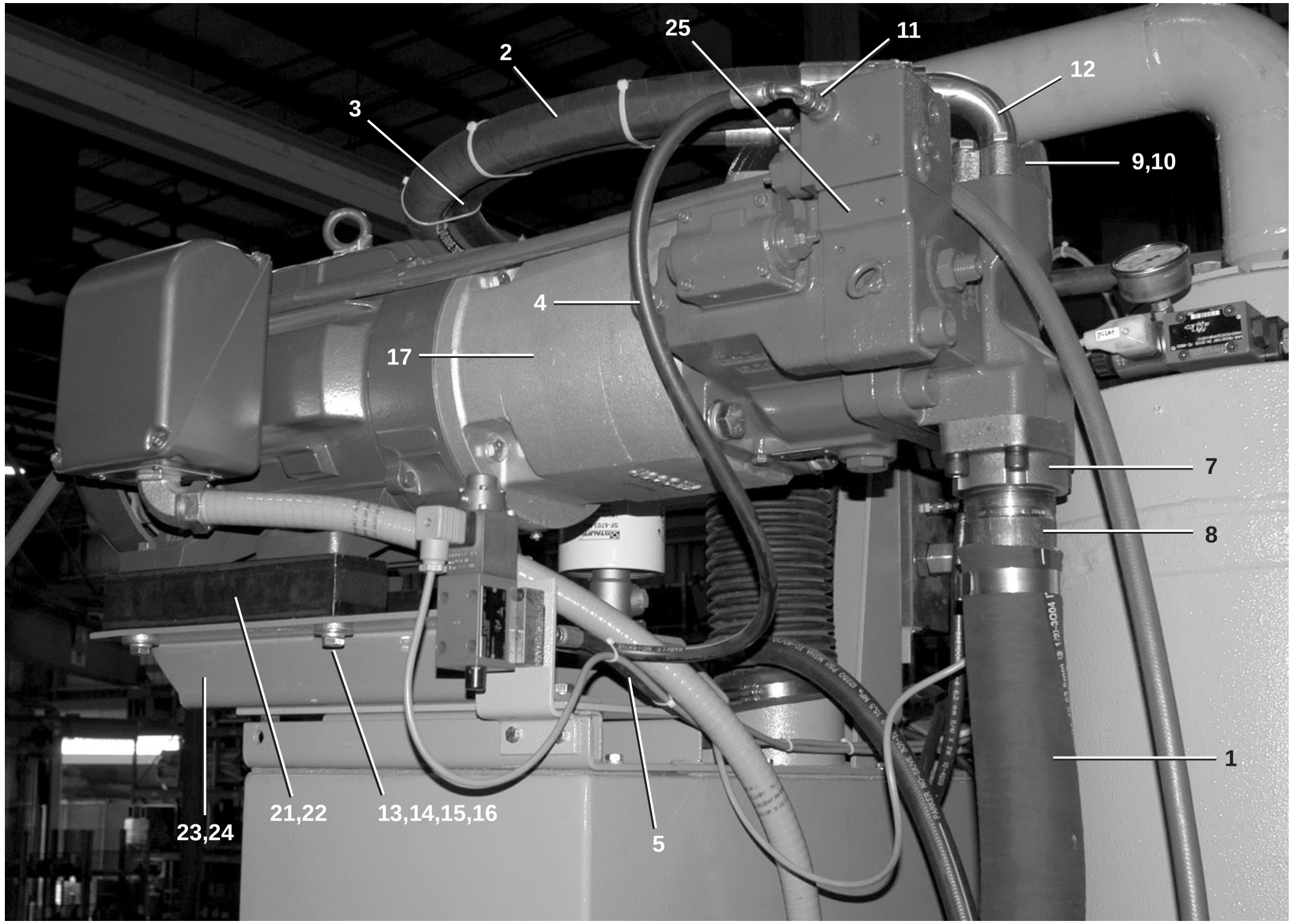

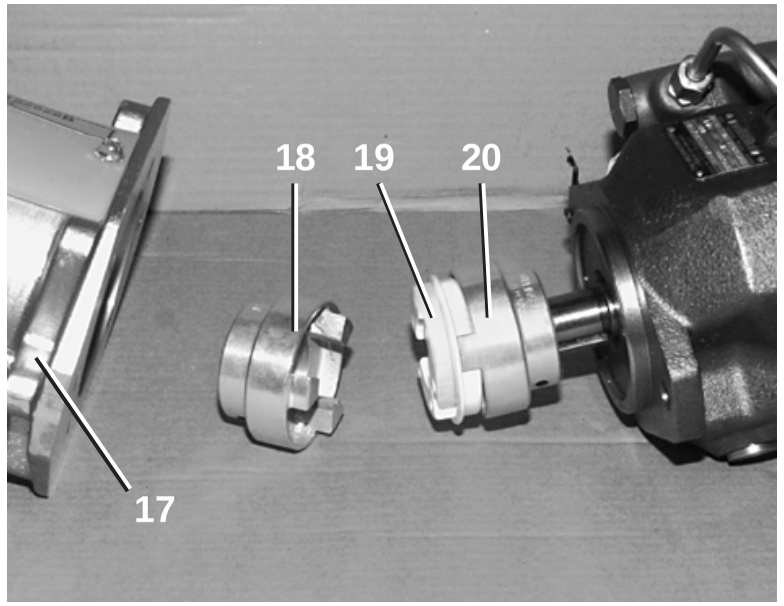

Hydraulic Main Pump Assembly

MP1A03CL,CR,L,R

Pellerin Milnor Corporation
P. O. Box 400, Kenner, LA 70063-0400

Litho in U.S.A.

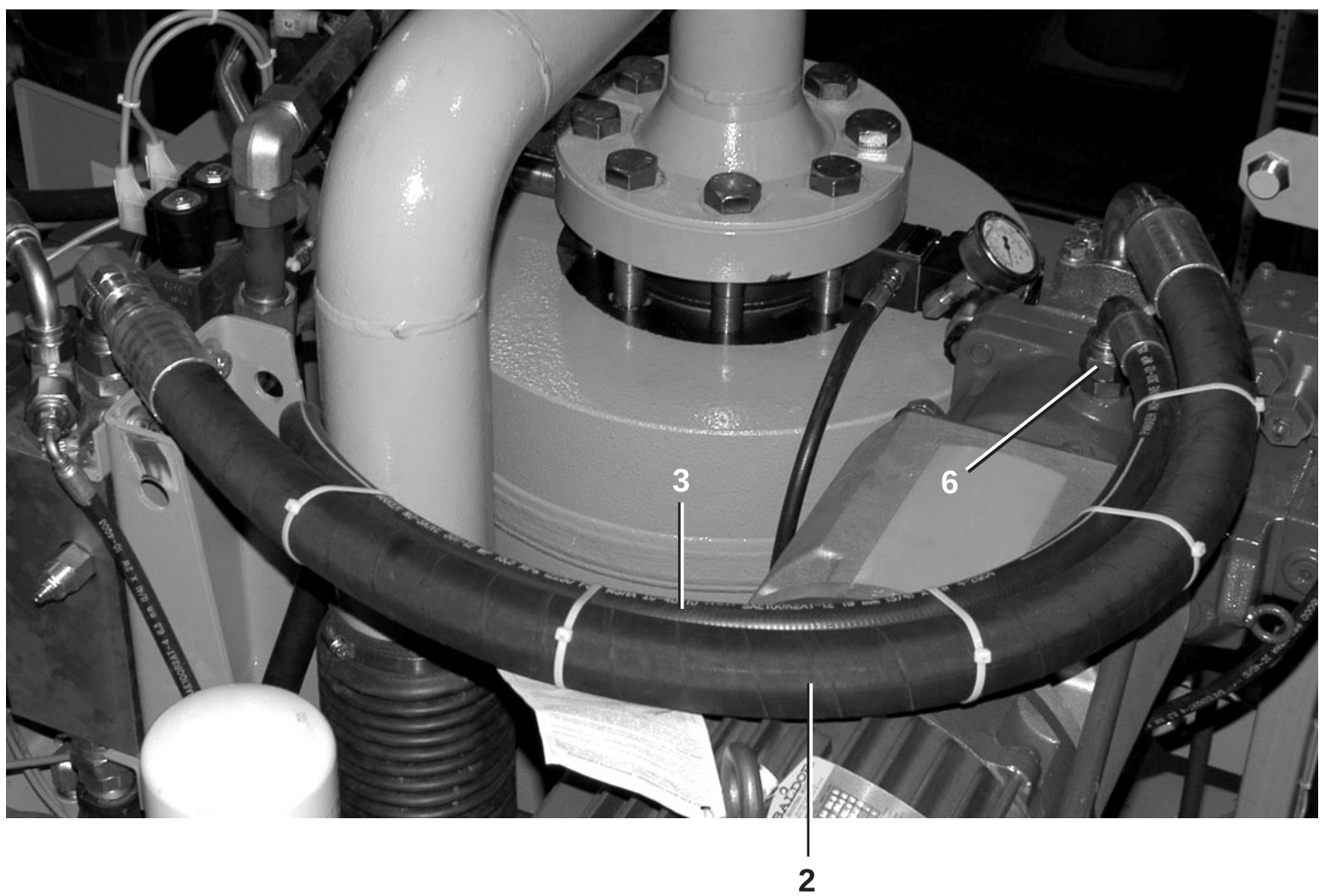

Parts List—Hydraulic Main Pump Assembly

Find the correct assembly first, then find the needed components. The item letters (A, B, C, etc.) assigned to assemblies are referred to in the "Used In" column to identify which components belong to an assembly. The item numbers (1, 2, 3, etc.) assigned to components relate the parts list to the illustration.

Used In	Item	Part Number	Description	Comments
			----------ASSEMBLIES----------	
	A	AHT10004E	HYD MAIN PUMP ASSY-MP1A03	
			----------COMPONENTS----------	
all	1	60EH96	HYD.HOSE 2+1/2"ID SUCTION100R4	
all	2	60EH84C48A	ASSY=HYDRAULIC HOSE 1.25"X48"L	
all	3	60EH50C56A	HYD.HOSE 3/4"+90FSWXFORSW=56"	
all	4	60EH21C32A	ASSY=HYDRAULIC HOSE 1/4 X32LG	
all	5	60EH21C40A	ASSY=HYDRAULIC HOSE 1/4 X40LG	
all	6	52ZCF50L0S	TUBEFITSTR3/4X1/2"#12-8F50LOS	
all	7	27E5507E	FLANGE ADAPT.KIT 2+1/2"CODE 61	
all	8	51E098C	KINGCOMNIP 2.5"IDXNPT #ST30	
all	9	27E5507F	SPLIT FLANGE 1+1/4"CODE 62	
all	10	52ZC0AS020	PARKORINGCOD61/62FLG1.25#2-222	
all	11	52AY0ER011	STRCONSEALOC 1/4"#4-F50LO-S	
all	12	52JY1ER002	EL90COD62FLGSLOK1.25"#20LOEQ2S	
all	13	15K151	HXCAPSCR 1/2-13UNC24X1.25 GR5	
all	14	15U300	LOKWASHER REGULAR 1/2 ZINC PLT	
all	15	15G230	HXNUT 1/2-13UNC2B SAE ZINC GR2	
all	16	02 19283	NUT=1/2-13UNCX1+1/2SQ SPEC	
all	17	27E5507A	PUMP-TO-MOTOR MOUNT 7.88"LG.	
all	18	27E5507B	MAGNLOY COUP.M50012414 HUBONLY	
all	19	27E5507C	MAGNLOY COUP.M50012816 HUBONLY	
all	20	27E5507D	MAGNALOY M570-U9 INSERT	
all	21	60BS6841	DAMP ROD #HC-286TC-W	
all	22	07 10276	MOTOR MOUNT PLATE-47BAR	
all	23	07 10411	MOTOR MTN BRKT RT-286TC	
all	24	07 10412	MOTOR MTN BRKT LF-286TC	
all	25	27E550766	PISTON PUMP-KAWASAKI(110K)	

Prefill Valve & Fittings

MP1A03CL,CR,L,R

Pellerin Milnor Corporation
P. O. Box 400, Kenner, LA 70063-0400

Litho in U.S.A.

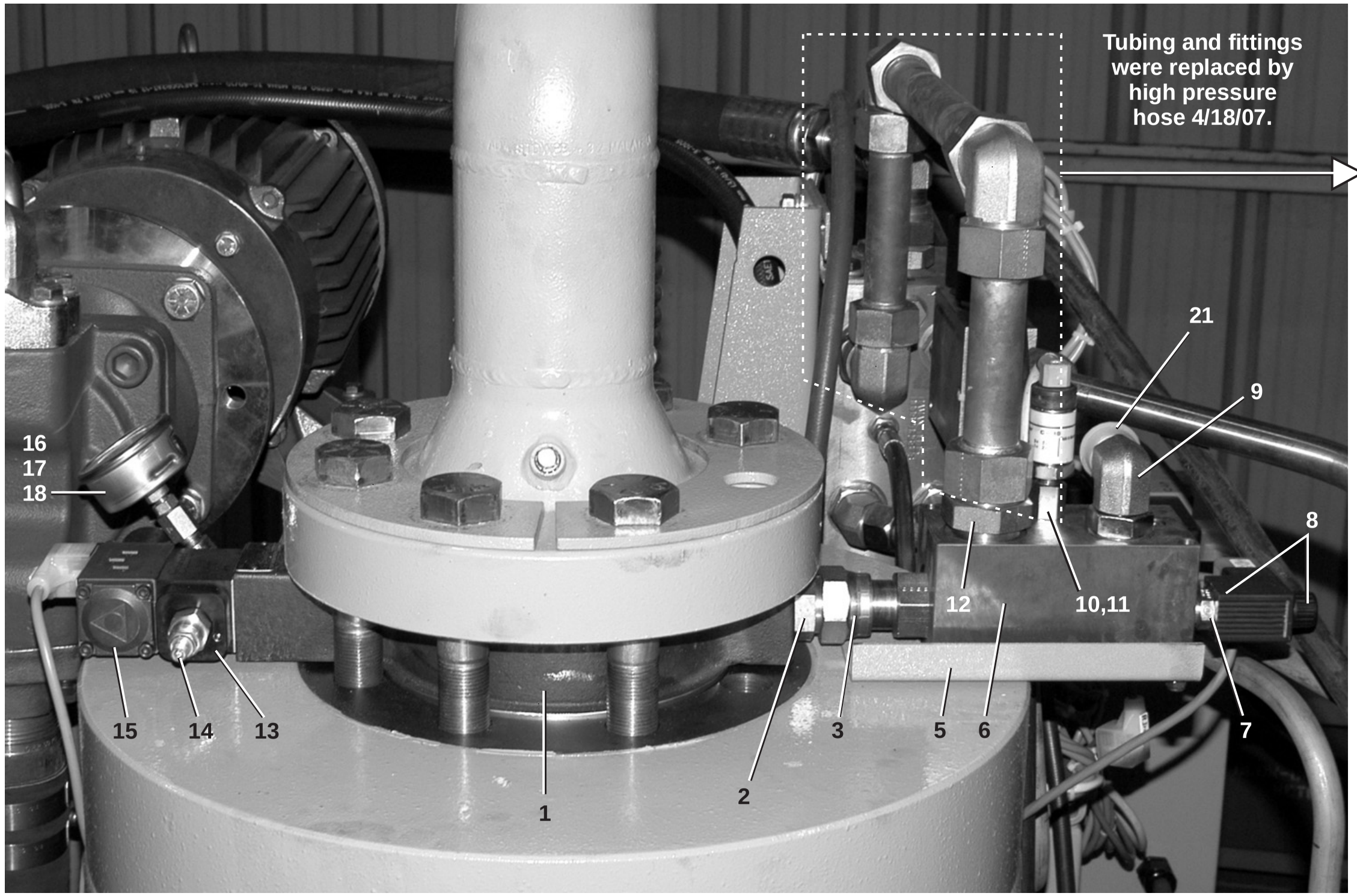

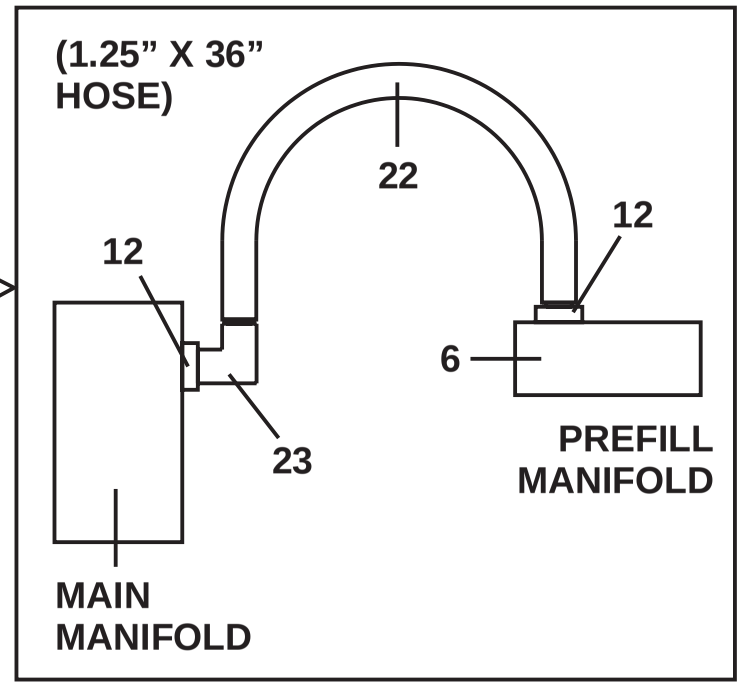

DETAIL: HIGH PRESSURE HOSE

Pellerin Milnor Corporation
P. O. Box 400, Kenner, LA 70063-0400

Litho in U.S.A.

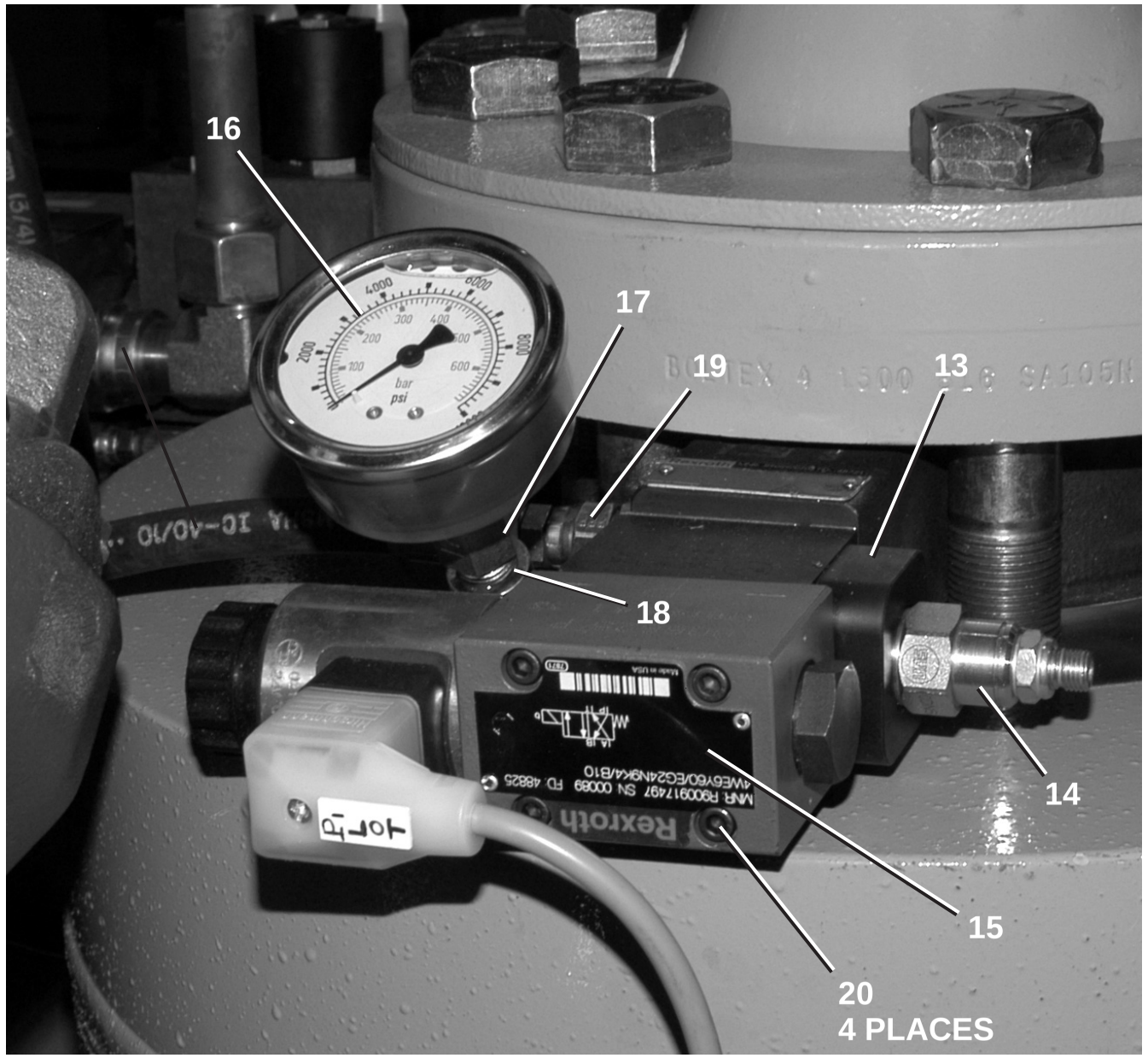

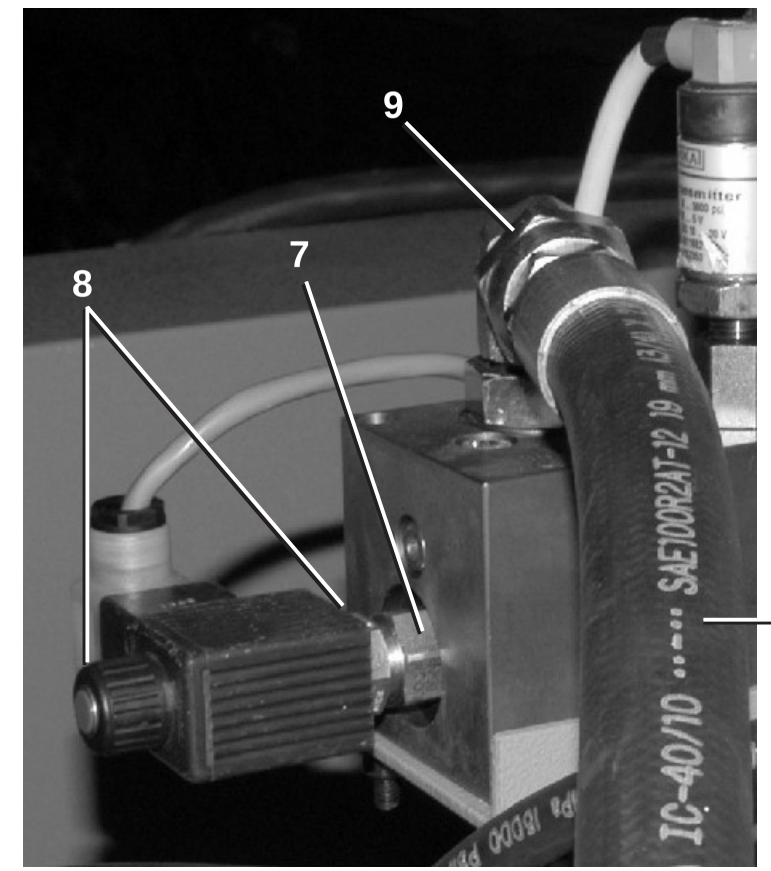

Pellerin Milnor Corporation
P. O. Box 400, Kenner, LA 70063-0400

Litho in U.S.A.

Parts List—Prefill Valve & Fittings

Find the correct assembly first, then find the needed components. The item letters (A, B, C, etc.) assigned to assemblies are referred to in the "Used In" column to identify which components belong to an assembly. The item numbers (1, 2, 3, etc.) assigned to components relate the parts list to the illustration.

Used In	Item	Part Number	Description	Comments
			----------ASSEMBLIES----------	
	A	AHT10010C	PREFILL VALVE ASSEMBLY-MP1A03	
			----------COMPONENTS----------	
all	1	X7 10416	PREFILL VALVE REXROTH-MACHINED	
all	2	52ZC1AS002	TUBEFITLGSTRTHDCON 1"#16FF50L0	
all	3	52ZC1AS001	TUBEFITSTRSW 1"#16-F650L-S	
all	4	52ZC0PS002	TUBEFITSTRSW 3/4"#12F650L-S	
all	5	07 10425	PREFILL MANIFOLD SUPPORT	
all	6	96RH713	DAMAN MANIFOLD C-30448	
all	7	96RH713A01	SUN CARTRIDGE#L0DA-8DN	
all	8	96RH713A02	SUN CART&COIL#DAAAMHN211	
all	9	52ZJ00S011	TUBEFIT90EL3/4"FACESEAL ORING	
all	10	X7 10277A	FITTING 52CZ0ES002-1/4 TAP	
all	11	X7 10278	SOCCAPSCR 15K032-DRILLED	
all	12	52ZC1ES002	TUBEFITSTRTH1.25X1#20-16F50L0S	
all	13	96DH430B	BODY, SUN(STEEL) #EBP/S	
all	14	96DH430C	CARTRIDGE, SUN #PBDB-LAN	
all	15	96RH712A02	DIRECTIONAL VALVE PREFIL PILOT	
all	16	30N127W	WIKAGAGE 7/16-20SAE 10000PSI/B	
all	17	52AY0ER015	STR.FORB-MP 1/4"#6404-04-04	
all	18	52JY0ER005	ELBOWPIPE 1/4 STR.#5502-4-4	
all	19	52ZC0ES003	TUBEFITSTR1/4X3/8#4-6F50LO-S	
all	20	15K023B	SOKHDCAP SCREW 10-32 X 4 GR.8	
all	21	60EH50C28A	ASSY=HYD HOSE 3/4"X28"LG	
all	22	60EH84C36A	ASSY=HYDRAULIC HOSE 1.25"X36"L	
all	23	52ZJ1ES001	TUBEFIT90ELSWNT 1.25"#20C6LO-S	

Used In	Item	Part Number	Description	Comments

Oil Recirculation Cooler & Fittings

MP1A03CL,CR,L,R MP1604CL,CR,L,R(High Flow & 600Volt)

Pellerin Milnor Corporation
P. O. Box 400, Kenner, LA 70063-0400

Litho in U.S.A.

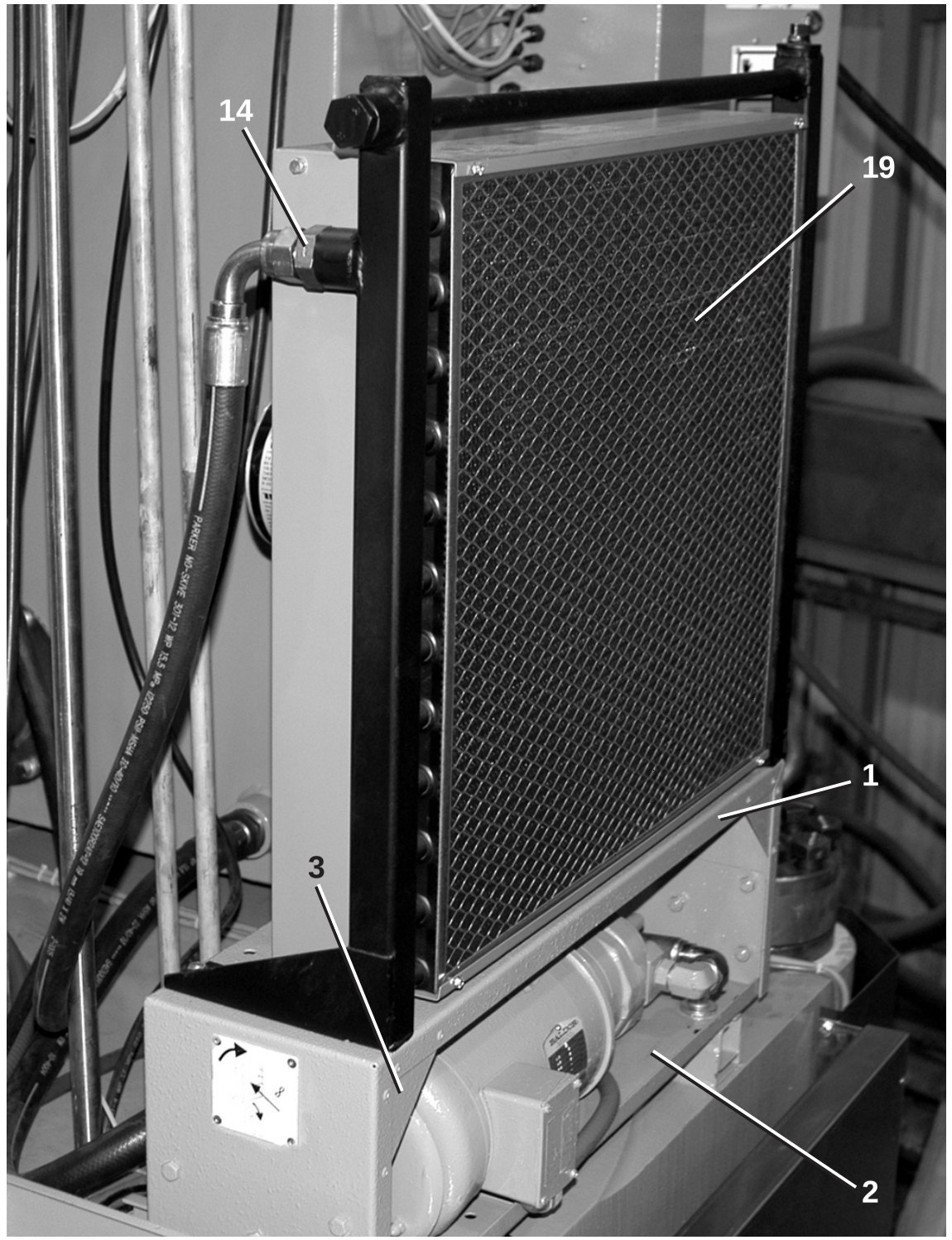

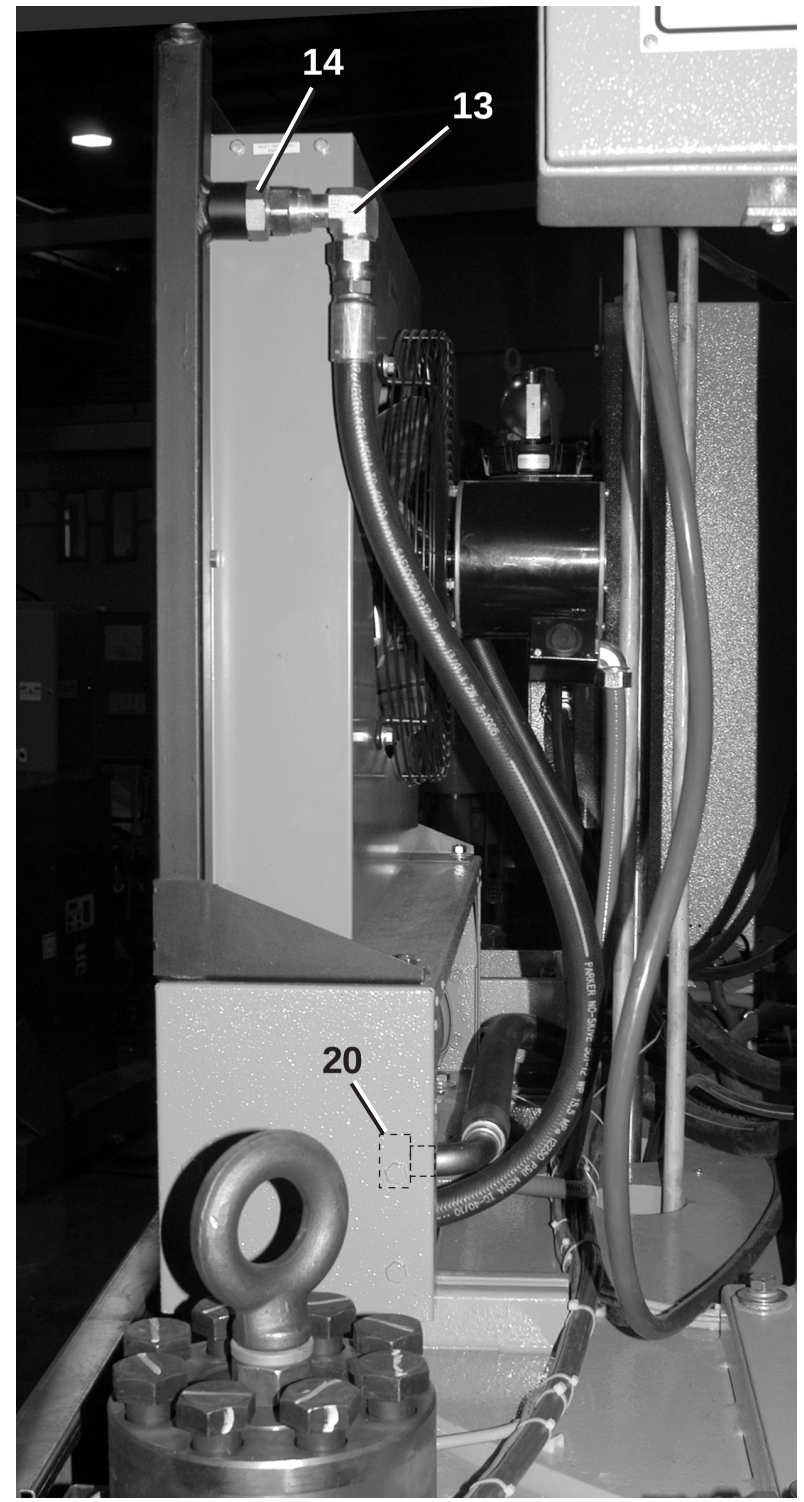

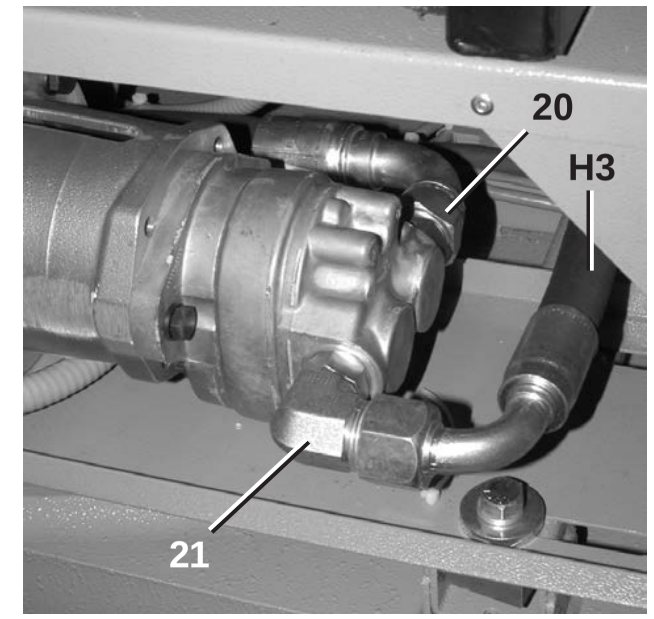

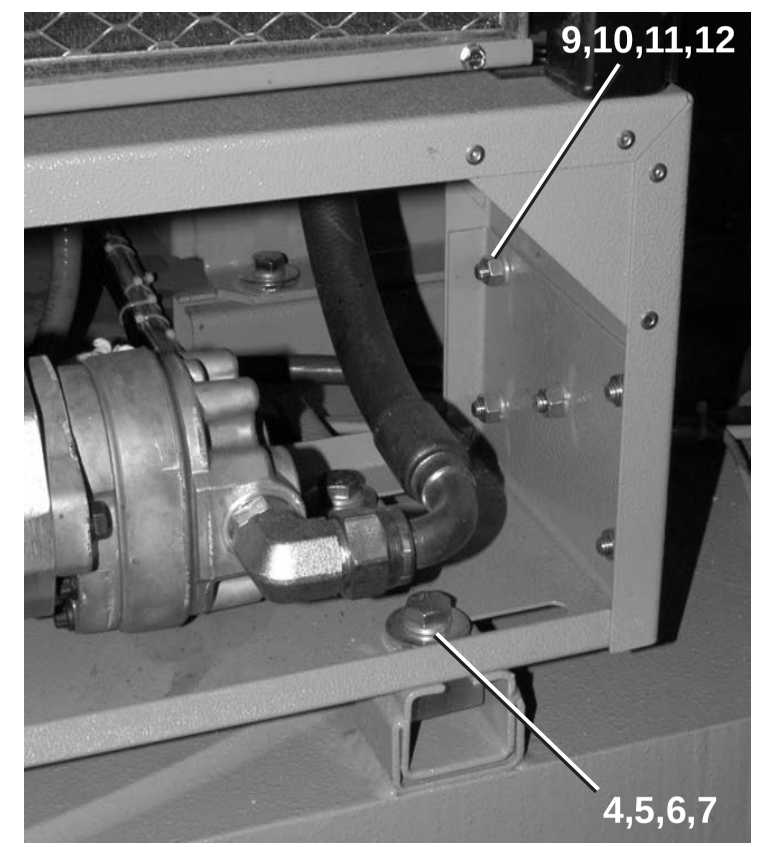

Oil Recirculation Cooler & Fittings

MP1A03CL,CR,L,R MP1604CL,CR,L,R(High Flow & 600Volt)

Pellerin Milnor Corporation
P. O. Box 400, Kenner, LA 70063-0400

Litho in U.S.A.

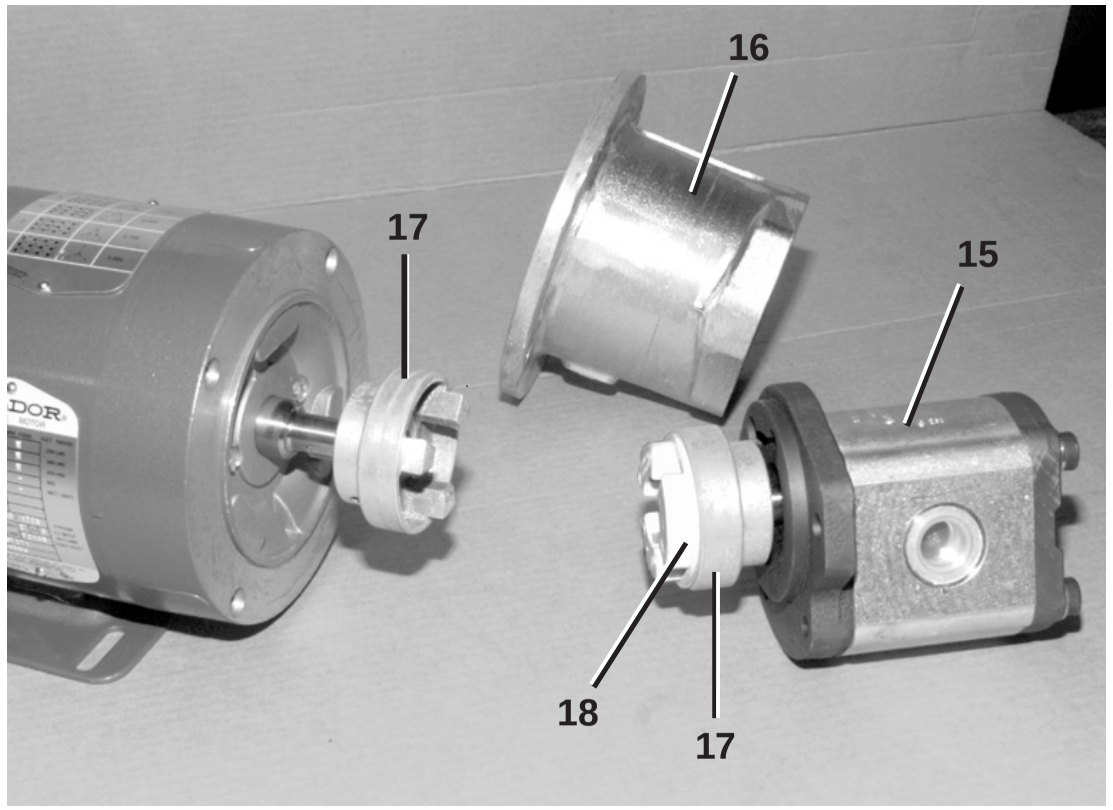

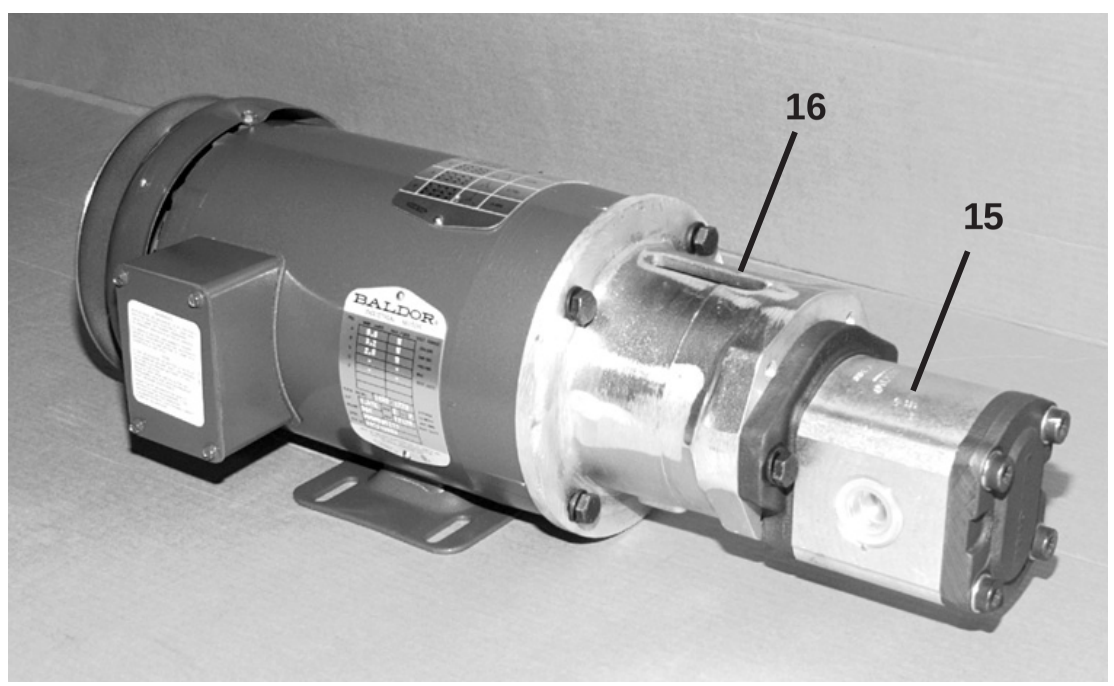

Parts List—Oil Recirculation Cooler & Fittings

Find the correct assembly first, then find the needed components. The item letters (A, B, C, etc.) assigned to assemblies are referred to in the "Used In" column to identify which components belong to an assembly. The item numbers (1, 2, 3, etc.) assigned to components relate the parts list to the illustration.

Used In	Item	Part Number	Description	Comments
			----------ASSEMBLIES----------	
	A	AHT10003A	OIL RECIRC/COOLER-MP1A03	MP1A03CL
	B	AHT10003	OIL RECIRC/COOLER-FITTINGS	MP1604 HIGH FLOW & 600VOLT
	C	G80CT001	GEN ASSY COOLING TOWER	
			----------COMPONENTS----------	
all	1	07 10308	RECIER PUMP HOUSING-TOP	
all	2	07 10309	RECIRC PUMP HOUSING-BOTTOM	
all	3	02 11378	CORNER GUSSET=COVER	
all	4	15K151	HXCAPSCR 1/2-13UNC24X1.25 GR5	
all	5	15U280	FL+WASHER(USS STD)1/2 ZNC PL+D	
all	6	15U300	LOKWASHER REGULAR 1/2 ZINC PLT	
all	7	02 19283	NUT=1/2-13UNCX1+1/2SQ SPEC	
all	8	15K095	HXCPSCR 3/8-16UNC2AX1 GR5 ZINC	
all	9	15G205	HXNUT 3/8-16UNC2B ZINC GR2	
all	10	15U255	LOCKWASHER MEDIUM 3/8 ZINCPL	
all	11	15U240	FLATWASHER(USS STD) 3/8" ZNC P	
all	12	15K085	HEXCAPSCR 3/8-16UNC2AX3/4 GR5	
all	13	52ZJ00S006	TUBEFIT90EL3/4"#12-C6LO-S	
all	14	52ZC00S004	TUBESTRCON3/4X1"OR#12-16F50L0S	
all	15	27E5506	GEAR PUMP-RECIRC.PUMP-EATON	
all	16	27E5506A	PUMP TO MOTOR MOUNT	
all	17	27E5506B	COUP.ASSY=5/8"BORE X 3/16"KW	
all	18	27E5506D	URETHANE INSERT FOR COUP.ASSY.	
	19	27HS092AAU	OIL COOLER 20HP@10GPM 50/60	MP1604 HIFLOW, MP1A3CL
	19	27HS092A98	OIL COOLER 20HP 10GPM 575V	MP1604 600VOLT
all	20	52XY0KR050	STRDPT 3/4MX1"MJ#6400-16-12-0	
all	21	52ZC00S005	TUBEFIT 3/4"X5/8"#12-10F50L0S	

Gage Assembly

MP1603CL,CR,L,R MP1604CL,CR,L,R MP1A03CL,CR,L,R

Pellerin Milnor Corporation
P. O. Box 400, Kenner, LA 70063-0400

Litho in U.S.A.

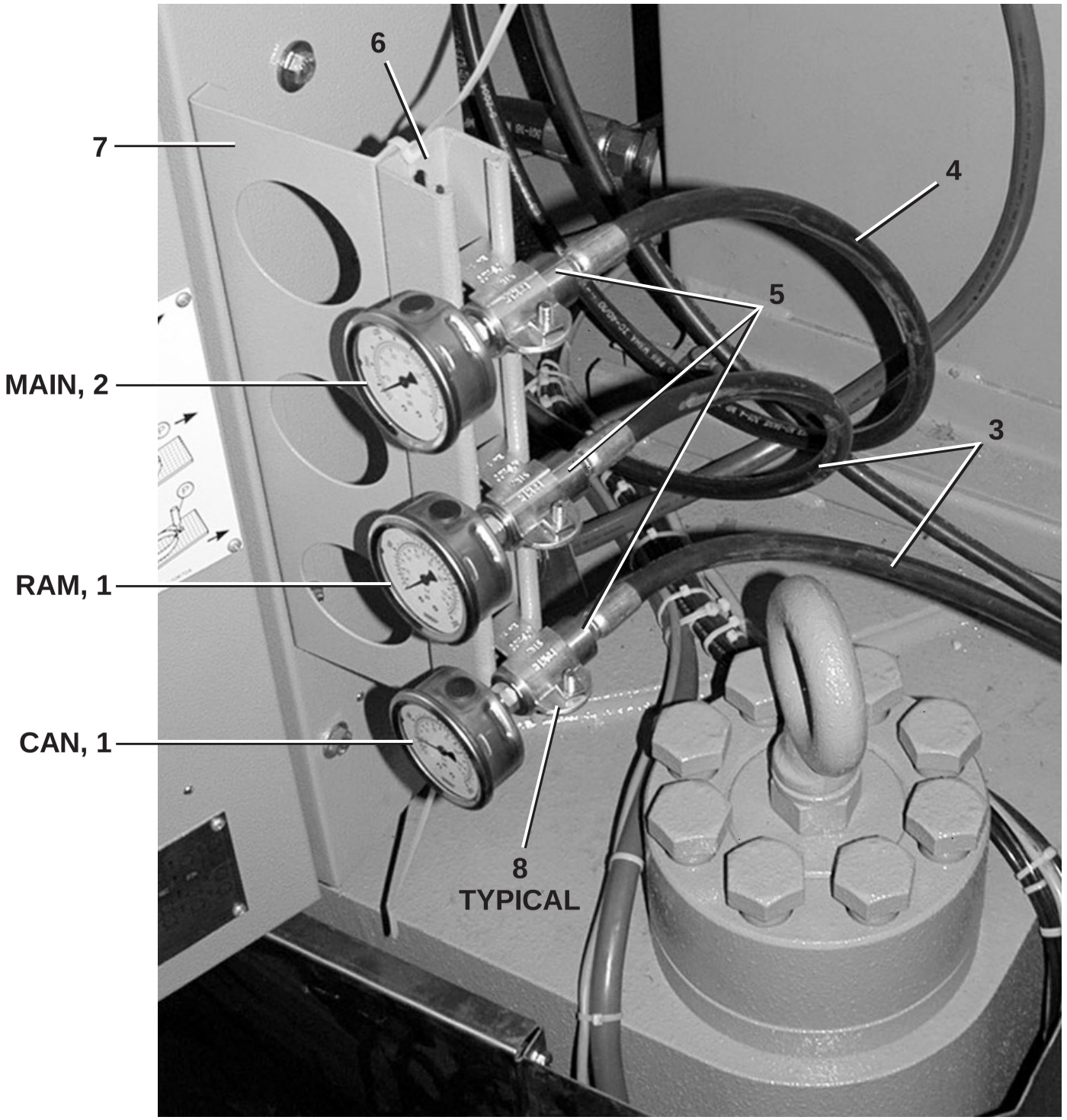

Parts List - Gage Assembly

Find the correct assembly first, then find the needed components. The item letters (A, B, C, etc.) assigned to assemblies are referred to in the "Used In" column to identify which components belong to an assembly. The item numbers (1, 2, 3, etc.) assigned to components relate the parts list to the illustration.

Used In	Item	Part Number	Description	Comments
			----------ASSEMBLIES----------	
	A	AHT10012A	GAGE ASSEMBLY-MP1A03	
			----------COMPONENTS----------	
all	1	30N125W	WIKA GAGE 7/16-20SAE 2000PSI/B	
all	2	30N127W	WIKAGAGE 7/16-20SAE 10000PSI/B	
A	3A	60EH21C60B	ASSY=HYD HOSE 1/4X60 GAGE SSPR	
B	3B	60EH21C90B	ASSY=HYD HOSE 1/4X90 GA MP1A03	
A	4A	60EH21C60C	ASSY=HYD HOSE 1/4X60 GA SSPRES	
B	4B	60EH21C90C	ASSY=HYD HOSE 1/4X90 GA MP1A03	
all	5	X7 10281	PRES.GAGE O-RING SAE-4 PORT	
all	6	03 60250C	UNISTRUT-14"	
all	7	07 10249	PRESSURE GAGES MTG BRKT	
all	8	27A0075	CLP-RGDSTL PS#1100-3/4	

Hydraulic Ram and Diaphragm Assembly

MP1601CL,CR,L,R MP1602CL,CR,L,R MP1603CL,CR,L,R MP1604CL,CR,L,R MP1A03CL,CR,L,R

Pellerin Milnor Corporation
P. O. Box 400, Kenner, LA 70063-0400

Litho in U.S.A.

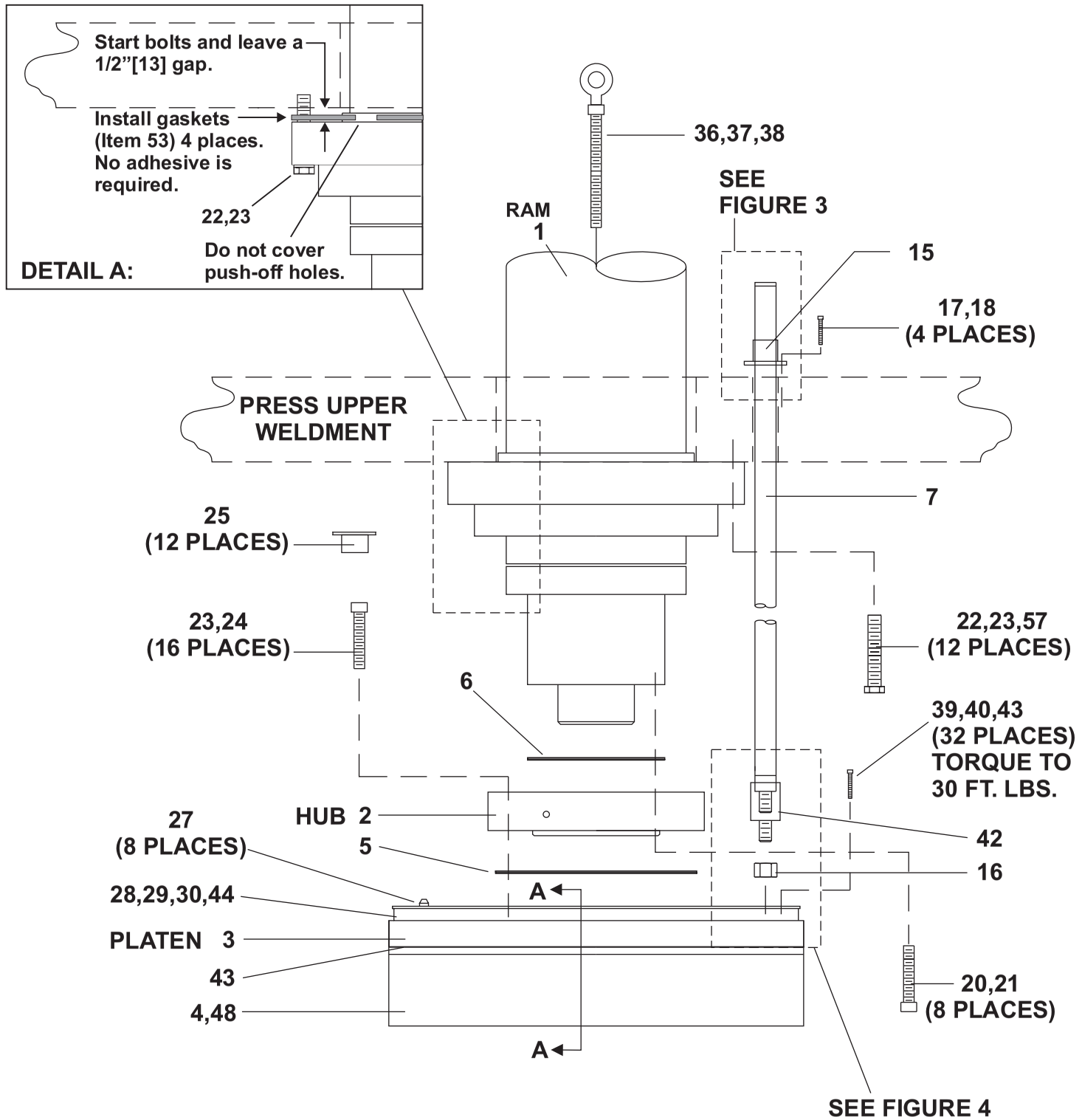

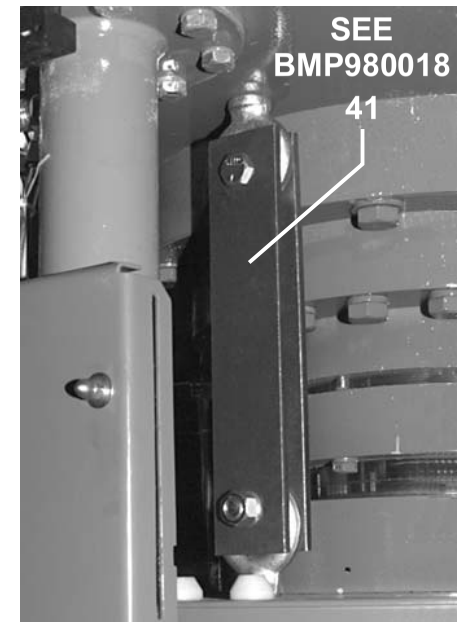

DIAPHRAGM SAFETY BAR
(INSTALL BEFORE SERVICING. SEE BIUUUS27, SAFETY FOR SERVICE PERSONNEL.)

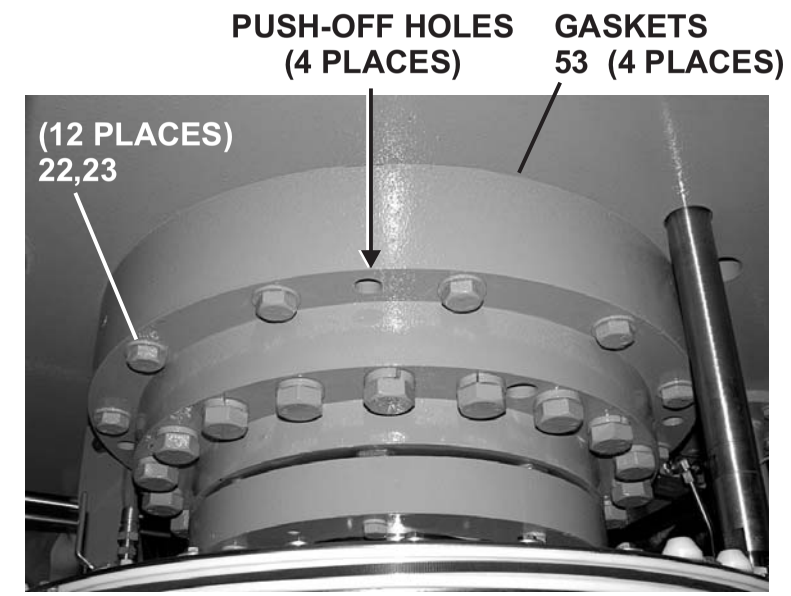

FIGURE 1: HYDRAULIC RAM TO UPPER PRESS WELDMENT (SEE DETAIL A.)

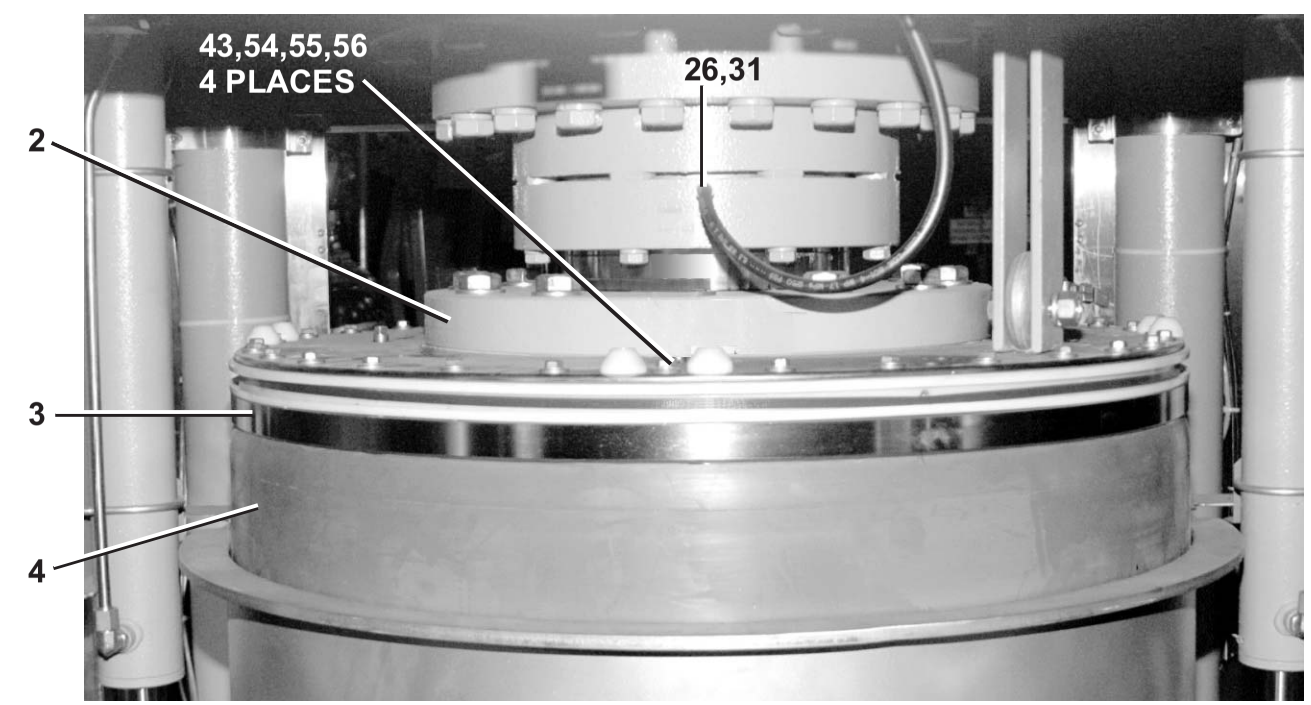

FIGURE 2: HYDRAULIC RAM ASSEMBLY

Pellerin Milnor Corporation
P. O. Box 400, Kenner, LA 70063-0400

Litho in U.S.A.

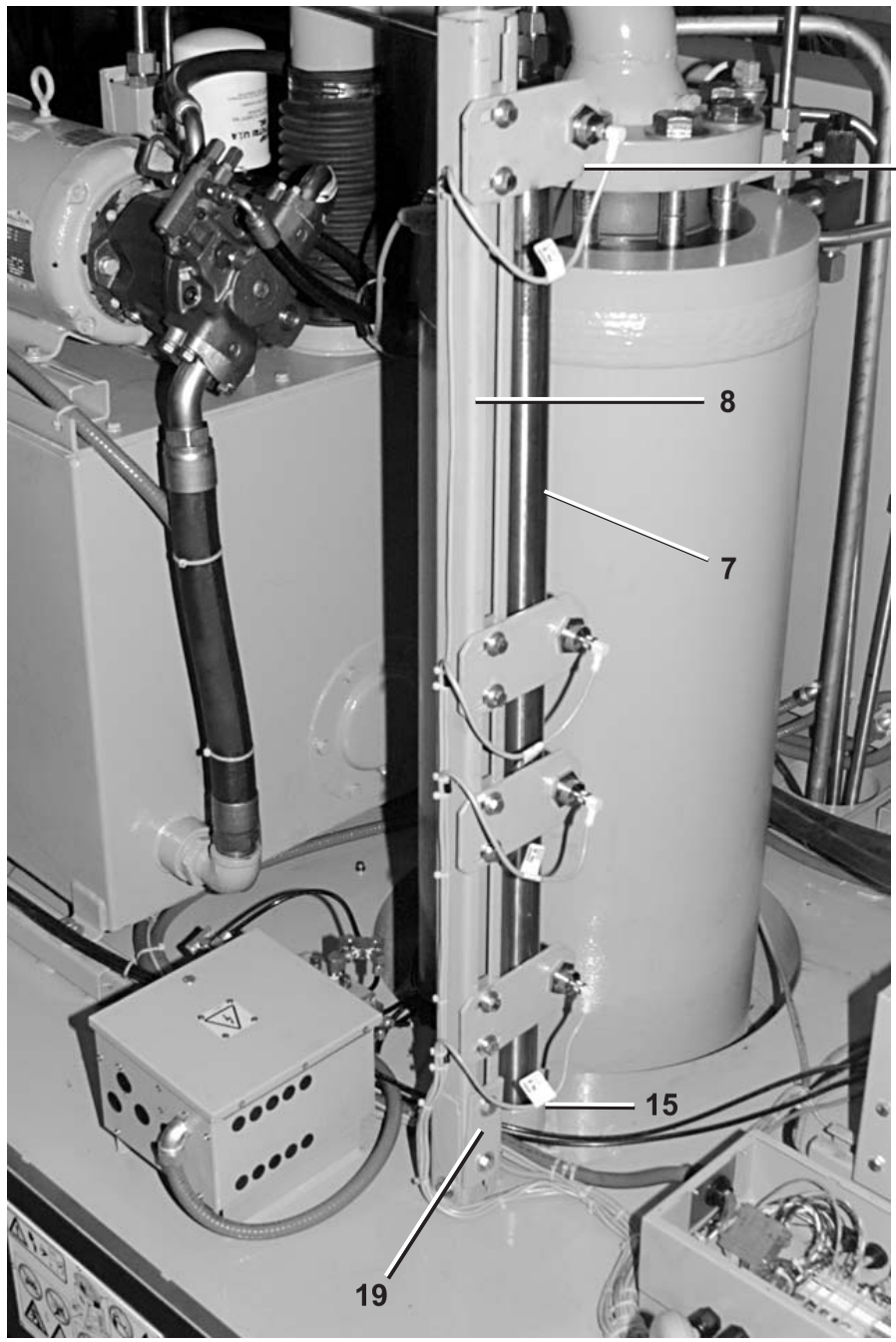

FIGURE 3
PROXIMITY SWITCH MOUNTING POST

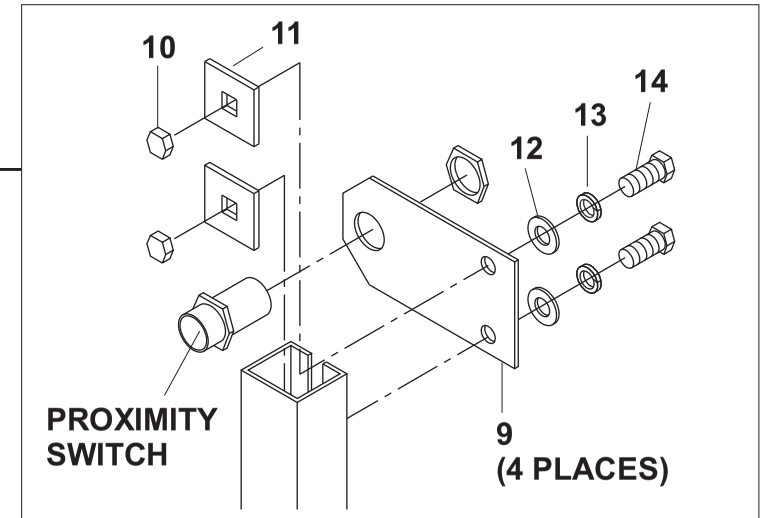

DETAIL B: PROXIMITY SWITCH MOUNTING

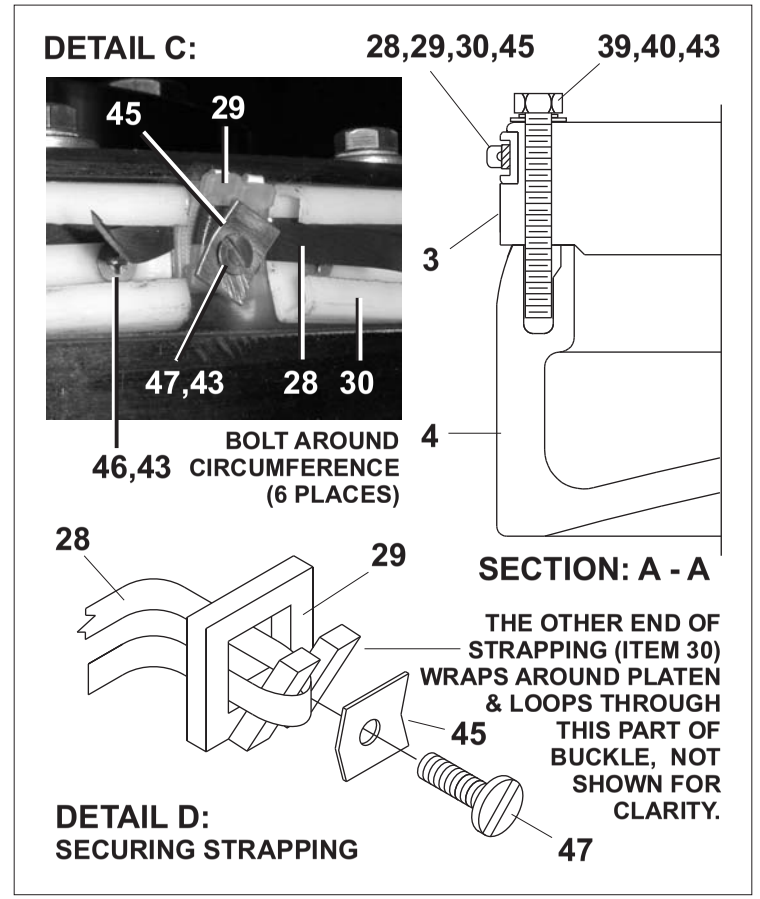

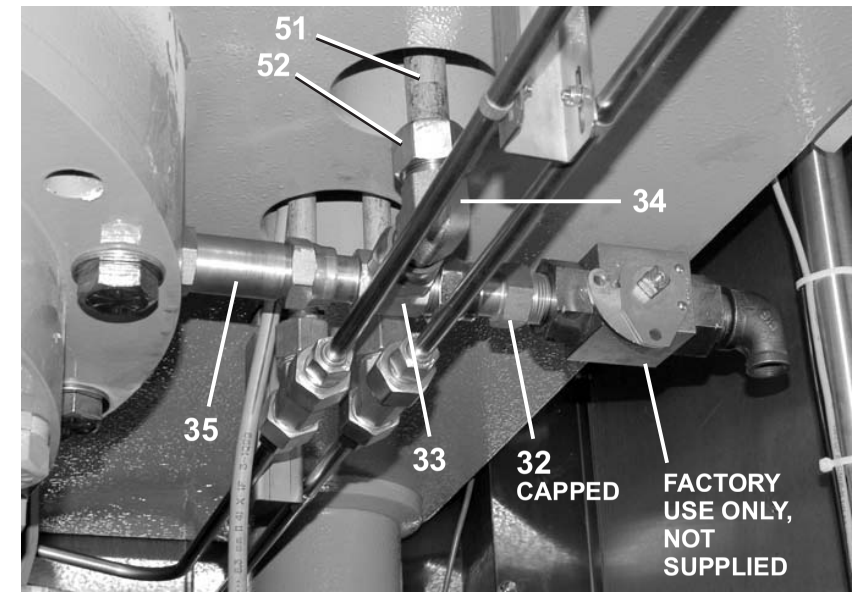

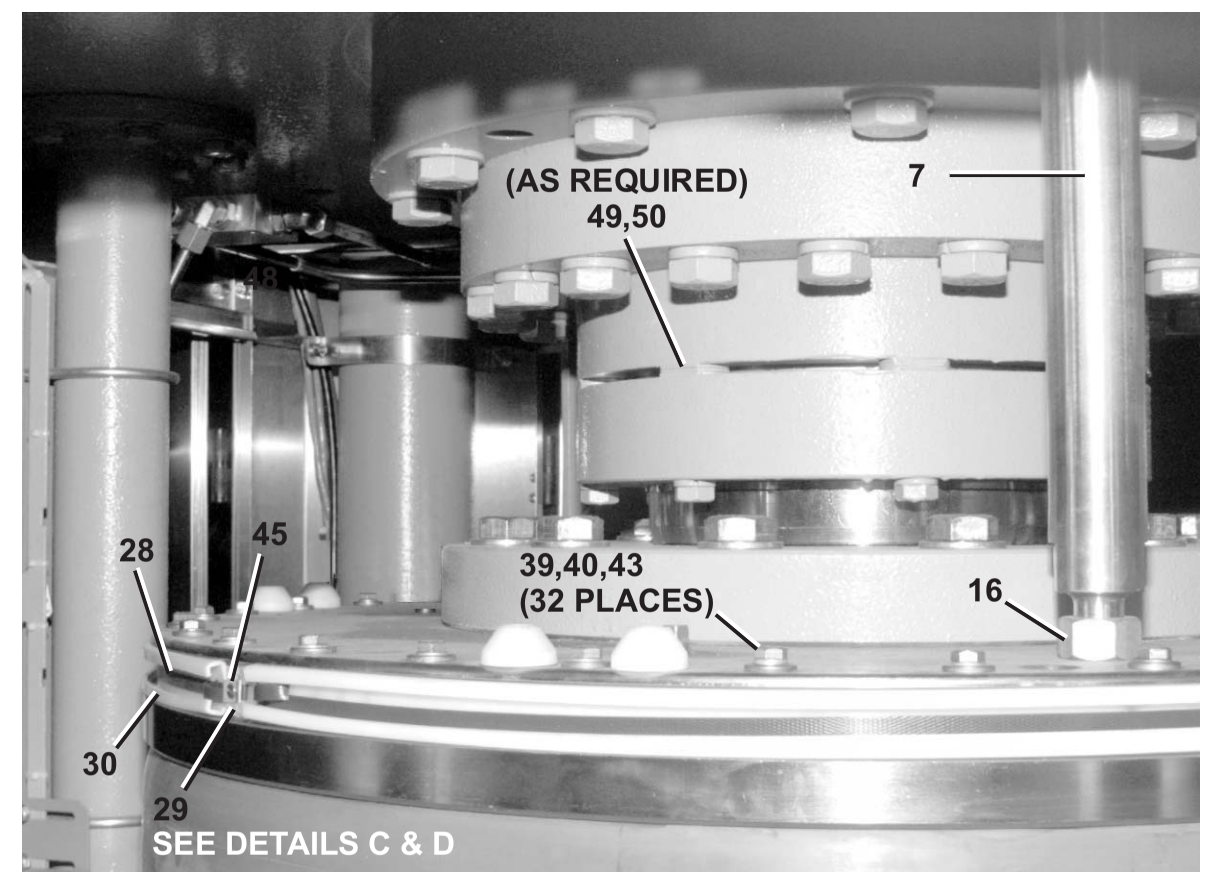

Pellerin Milnor Corporation
P. O. Box 400, Kenner, LA 70063-0400

Litho in U.S.A.

Parts List—Hydraulic Ram and Diaphragm Assembly

Find the correct assembly first, then find the needed components. The item letters (A, B, C, etc.) assigned to assemblies are referred to in the "Used In" column to identify which components belong to an assembly. The item numbers (1, 2, 3, etc.) assigned to components relate the parts list to the illustration.

Used In	Item	Part Number	Description	Comments
			ASSEMBLIES	
	A	GHC10000A	HYDRAULIC RAM ASSY BLEACH	MP1601, MP1603
	B	GHC10002	HYDRAULIC RAM ASSY-47/50BAR	MP1602, MP1604
	C	GHC10003	HYDRAULIC RAM ASSY-110KG PRESS	MP1A03
AB	D	A80RP002	MEMBRANE MAST 1-8UN BASE	
C	E	A80RP003	MEMBRANE MAST-MP1A03	
A	F	AHT10038	RAM INSTL BOLTS/LUBE-MP1603	
BC	G	AHT10039	RAM INSTL BOLTS/LUBE-MP1604	
			COMPONENTS	
A	1	27E161339	HYD.RAM 13"BORE X 39" STROKE	
B	1	27E161639	HYD.RAM 16"BORE X 39" STROKE	
C	1	27E161749	HYD.RAM 17"BORE X 49" STROKE	
AB	2	X7 10040C	PLATEN HUB MACHINED-47BAR	
C	2	X7 10034	PLATEN HUB MACHINE-48"MEMBRANE	
AB	3	X7 10052	MEMBRANE PLATEN SSPRESS	
C	3	X7 10035	PLATEN SSPRESS-48" MEMBRANE	
AB	4A	ACW10001	MEMBRANE/RING ASSY SSPRESS	
C	4B	ACW10002	MEMBRANE/RING ASSY 48" DIA	
all	5	60C193A	0-RING 22"ID X 1/4 BUNA70 #471	
all	6	60C180V	ORING 11"IDX1/8CS V 70D #276	
D	7	X7 10254	DIAPH ROD 1-8UN MACHINED	
E	7	X7 10383	MEMBRANE GUIDE ROD-MP1A03	
D	8	07 10258	DIAPHRAM POSITION PROX.SW POST	
E	8	07 10258A	DIAPHRAM PROX.SW POST-MP1A03	
all	9	07 10265	DIAPHRAM PROX.SW PLATE	
all	9	07 10265A	DIAPHRAM PROX.SW PL 2"W	
all	10	17N070AP	RETAIN NUT#S10222-27	
all	11	02 11942	H20 BRKT JAM PLATE 36/42QU	
D	12	15U240	FLATWASHER(USS STD) 3/8" ZNC P	
DE	13	15U255	LOCKWASHER MEDIUM 3/8 ZINCPL	
DE	14	15K095	HXCPSCR 3/8-16UNC2AX1 GR5 ZINC	
DE	15	A80GB001	GUIDE ROD BUSHING ASSEMBLY	
D	16	15G250B	HEXNUT 1-8UNC2B BRASS	
E	16	X7 10496	DIAPHRAM ROD JAM NUT	
DE	17	15K151	HXCAPSCR 1/2-13UNC24X1.25 GR5	
DE	18	15U300	LOKWASHER REGULAR 1/2 ZINC PLT	
DE	19	07 10264	DIAPH POST MTG PLATE	
D	20	15K234B	HXCAPSCR 3/4-16UNFX3+1/2" GR8	
E	20	15K234C	HXCAPSCR 3/4-16UNFX5+1/2" GR8	
all	21	15U321H	FLTWASH 3/4 HARD ASTM F436	
F	22	X7 10504	RAM BOLT 1-14X5"CHASED THREAD	
G	22	X7 10505	RAM BOLT 1-14X7"CHASED THREAD	
all	23	15U393	FLTWASH 1" HARD ASTM F436	
AB	24	15K303	HEXCAPSCR 1-14X4 GR8 ZINC	
C	24	15K300A	HEXCAPSCR 1-14X5.5 GR8 ZINC	
all	25	12P11GHP	HOLEPLUG 1+3/8" BLK HEYCO#2753	
AB	26	60E076B078	HOSE ASSY 1/4"X78"LG+ENDS	
C	26	60E076B108	HOSE ASSY 1/4"X108"LG+ENDS	
all	27	X7 10004	PLATEN GUIDE BUTTON	
All	28	69B009	POLY.STRP 3/8'HG250 BLK.16X6	
all	29	69B009A	PLASTIC BUCKLE 3/8+1/2	
all	30	60F075	RAIL COVER POLY #EPP702	
all	31	52AY0ER008	STR.1/4"MJIC X MP #2404-4-4	
AB	32	52ZN1AS003	TUBEFIT NUT+CAP #16-FNL-S	
C	33	52ZT1AS003	TUBEFTTEE 1"PARKER#16R6L0-S	
all	34	52ZJ1AS002	TUBEFIT90ELSWNT1"#16-C6LO-S	
all	35	52ZC1AS002	TUBEFITLGSTRTHDCON 1"#16FF50L0	
AB	36	17A081	EYE NUT 1-8 STEEL	
C	36	17A122	EYE NUT 1.25-7 GAL. STEEL	
AB	37	17R031A13A	THRD ROD 1-8 X 13" GR8 ZNPL	
C	37	17R125A14K	1-1/4-7X14 STUD B7 BLK.	
AB	38	15G250	HXNUT 1-8UNC2B SAE ZNC GR2	
C	38	15G260	HXNUT 1+1/4-7UNC2B BLK GR2	
all	39	15K136S	HEXCAPSCR 3/8-16 X 3.5 SS18-8	
all	40	15U248	FLATWASH 1-1/8ODX.406IDX.185TK	
AB	41	AHT10030	DIAPHRAM SAFETY BAR ASSY-13RAM	
B	41	AHT10030A	MEMBRANE SAFETY BAR ASSY-16RAM	
C	41	AHT10030B	DIAPHM SAFETY BAR ASSY-MP1A03	
B	42	X7 10274	DIAPHRAM ROD END ADAPTER	
all	43	20C007G	THDLOCKSEAL LCT24231 RMUBL50CC	
AB	44	20C013D	LOCTITE GASKET ELIM # 51531	
C	44	20C013B	GASKET ELIMINATOR LOC.#51580	
all	45	07 10054	BUCKLE HOLD DOWN WASHER	
all	46	15N119	PHILPANMACSCR 10-32X1/2 NKL	
all	47	15N143FSS	FLATMACHSCR 10-24 X 3/4 SS18-8	
AB	48	ACW10010	GUM RUBBER SET 40DURO-40MEM	
C	48	ACW10011	GUM RUBBER SET 40DURO-48MEM	
All	49	15U314C	WASHER=CLIPPED 21/32IDX.120T	
all	50	07 10237	SHIM=RAM SEAL	
all	51	87Z1X095	TUBE 1"ODX.095WL 304SMLS	
all	52	52ZN1AS001	TUBEFIT 1"NUT #16-BL-S	
A	53	07 10500	GASKET-RAM TO HEAD 13"RAM	
B	53	07 10499	GASKET-RAM TO HEAD 16/17 RAM	
all	54	15K086C	SOKCAPSCR FLTHD 3/8-16X3/4 SS1	
all	55	02 02185	WASHER=PISTON CUP COMP LIMIT	
all	56	52PY0GR002	HEXPLUG 3/8"XOR#6-P50N-SS	
All	57	20C510	LOCKTITE MOLYPASTE#51048	

Scupper Load Chute

MP1603CL,CR,L,R MP1604CL,CR,L,R MP1A03CL

BMP070037/2008084B
(Sheet 1 of 2)

Pellerin Milnor Corporation
P. O. Box 400, Kenner, LA 70063-0400

Litho in U.S.A.

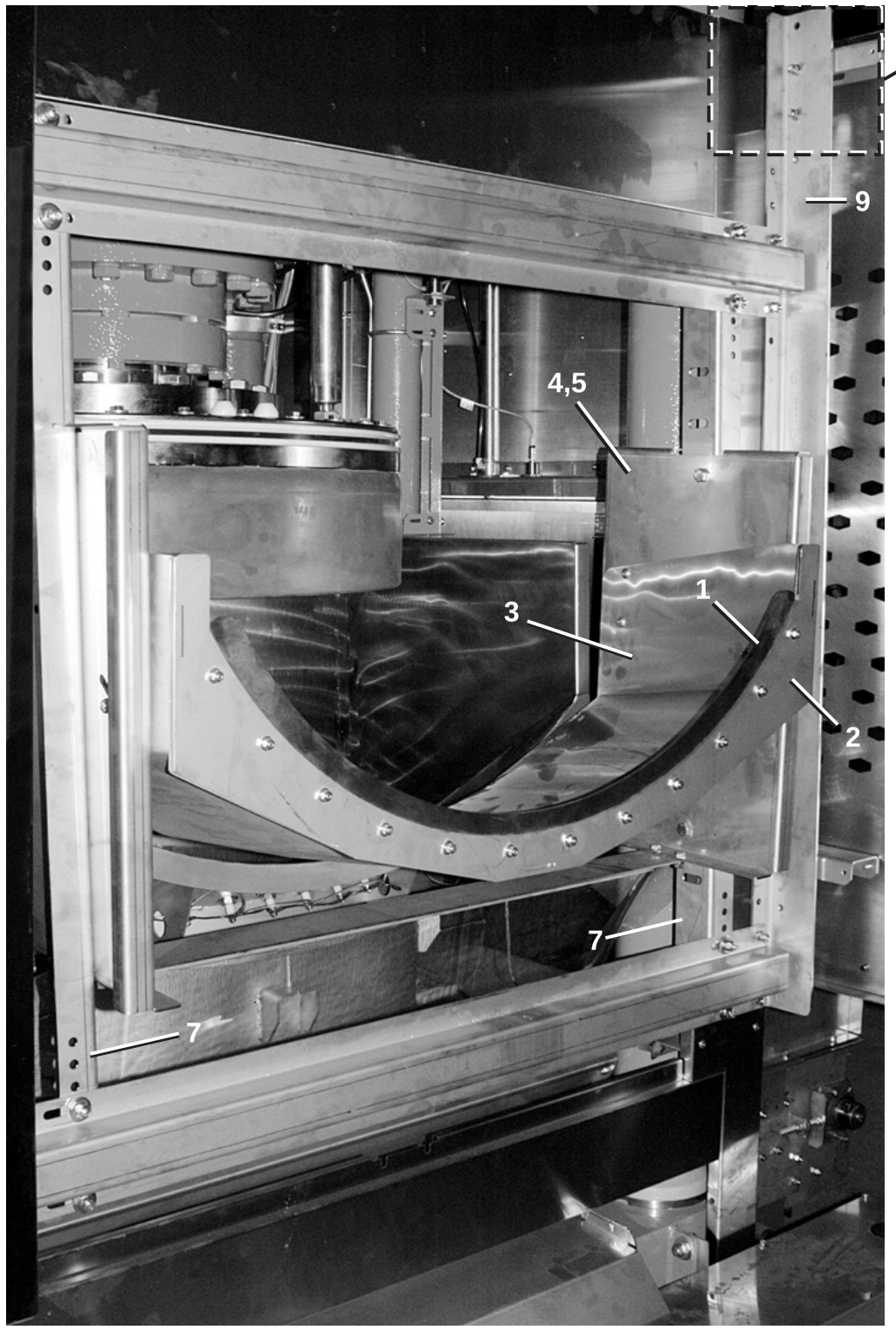

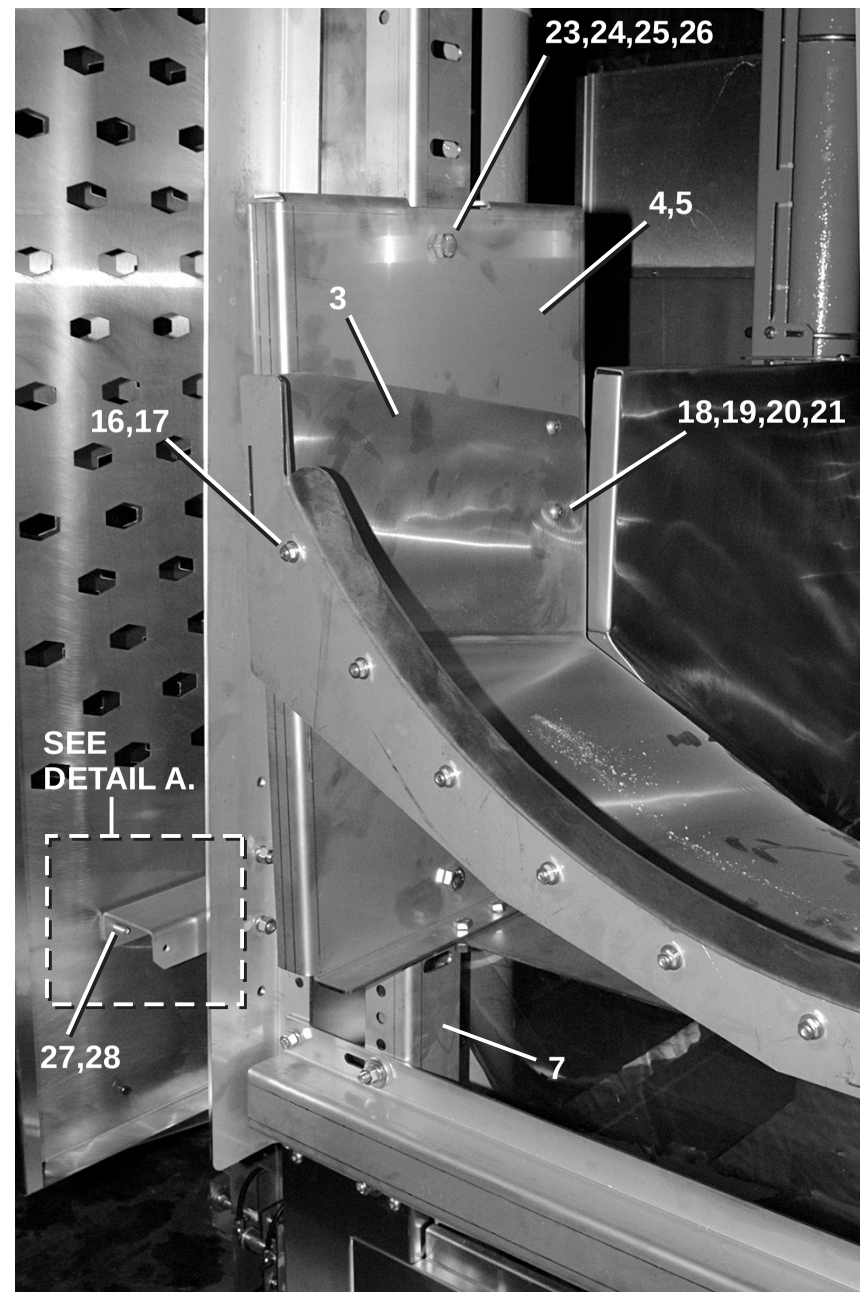

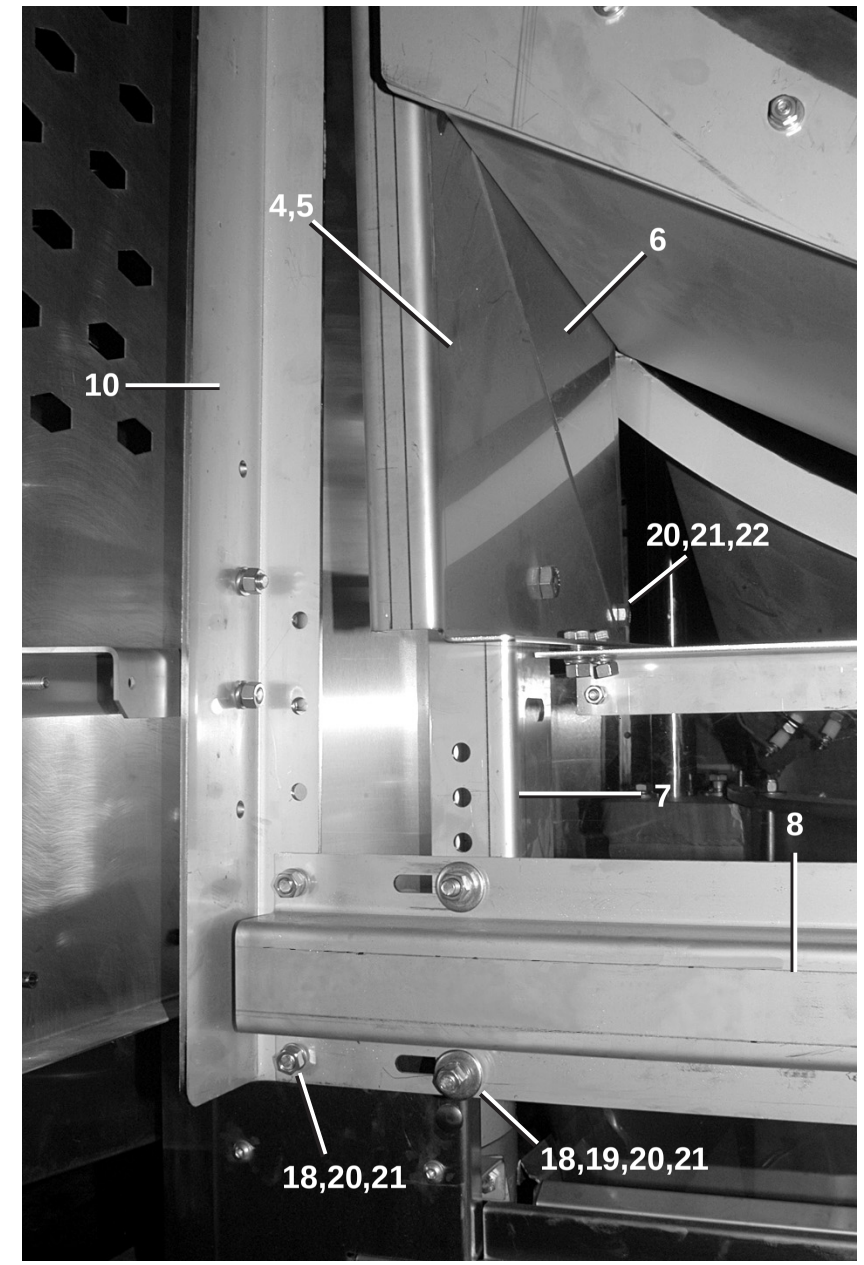

Scupper Load Chute

MP1603CL,CR,L,R MP1604CL,CR,L,R MP1A03CL

Pellerin Milnor Corporation
P. O. Box 400, Kenner, LA 70063-0400

Litho in U.S.A.

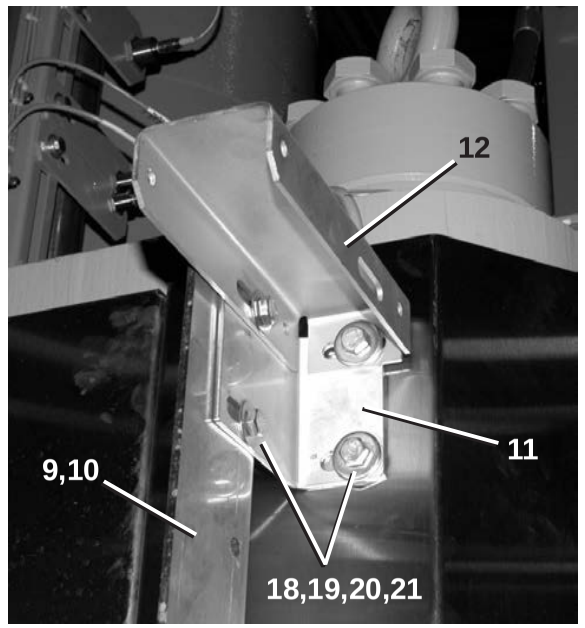

DETAIL A: TYPICAL 4 PLACES

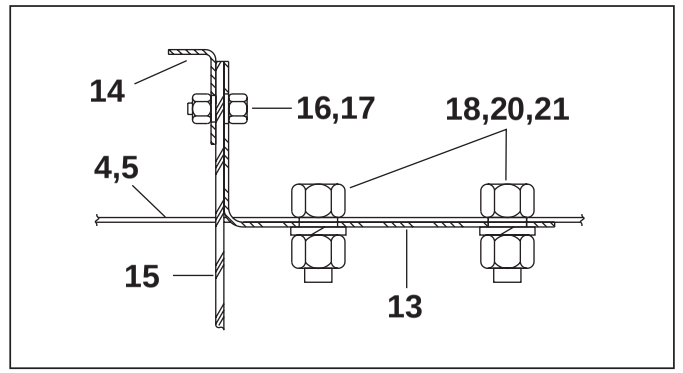

DETAIL B: PLASTIC SHEETING

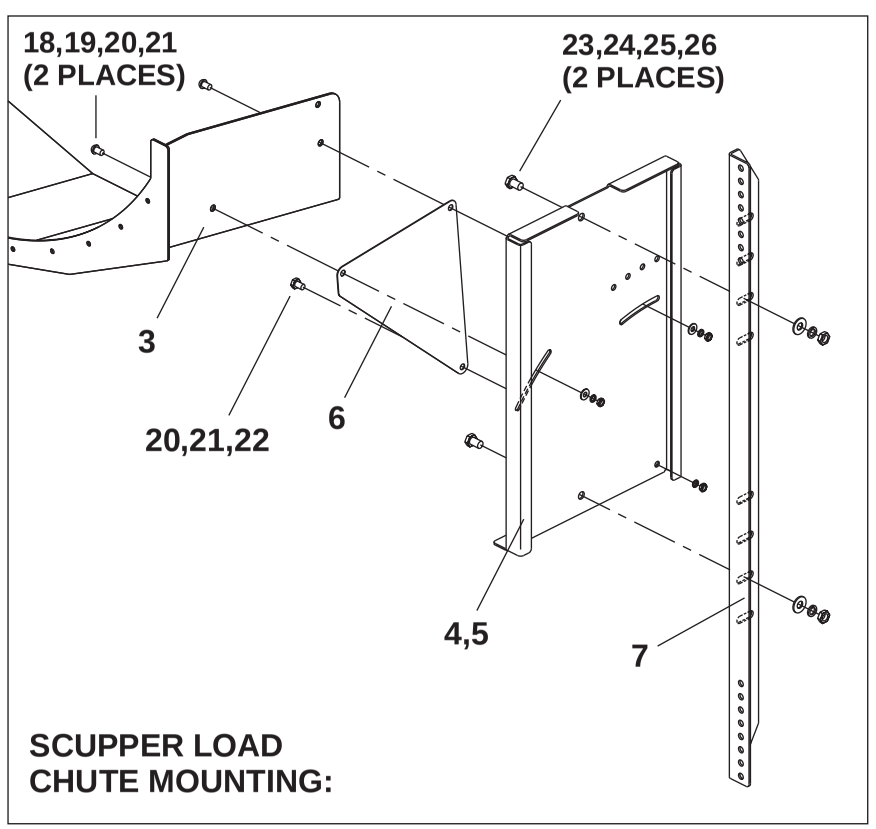

SCUPPER LOAD
CHUTE MOUNTING:

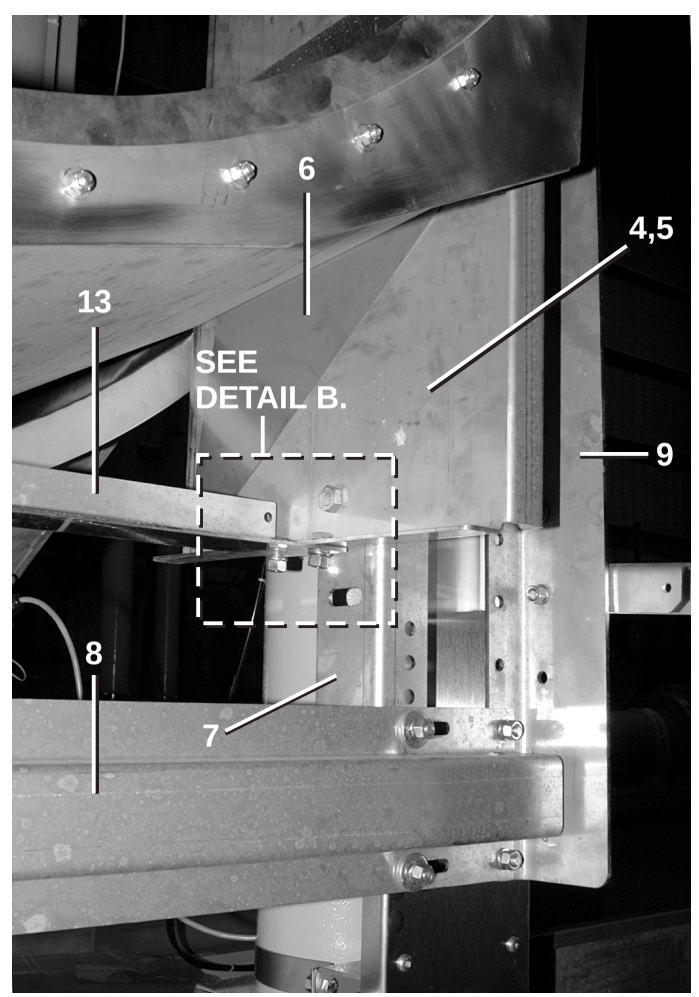

Parts List—Scupper Load Chute

Find the correct assembly first, then find the needed components. The item letters (A, B, C, etc.) assigned to assemblies are referred to in the "Used In" column to identify which components belong to an assembly. The item numbers (1, 2, 3, etc.) assigned to components relate the parts list to the illustration.

Used In	Item	Part Number	Description	Comments
			ASSEMBLIES	
	A	ACS10009	RECEIVING CHUTE 40WX33DEG	MP1603, MP1604
	B	ACS10011	RECEIVING CHUTE 48WX35DEG	MP1A03CL
			COMPONENTS	
A	1	07 10486	LOADCHUTE SPLASH GUARD	
B	1	07 10502	LOADCHUTE SPLASH GUARD-48W	
A	2	07 10487	ENTRY CHUTE 40W END PLATE	
B	2	07 10456	ENTRY CHUTE END PLATE	
A	3	W7 10489	LOADCHUTE ENTRY WLMT-MP16XX	
B	3	W7 10457	LOADCHUTE ENTRY WLMT-MP1A03	
all	4	07 10458	ENTRY CHUTE MTG BRKT-RT	
all	5	07 10458A	ENTRY CHUTE MTG BRKT-LF	
all	6	07 10460	CHUTE ANGLE ADJ PLATE	
A	7	07 10498	ENTRY CHUTE MTG ANGLE-MP16XX	
B	7	07 10459	ENTRY CHUTE MTG CHAN	
A	8	07 10469	ENTRY CHUTE 40W SUPPORT CHAN	
B	8	07 10461	ENTRY CHUTE SUPPORT CHAN	
all	9	07 10328	CHUTE DRAIN FRAME-RIGHT	
all	10	07 10328A	CHUTE DRAIN FRAME-LEFT	
all	11	07 10015	LIFT FRAME SUPPORT BRKT	
all	12	07 10017	LOADCHUTE GUARD MTG BRKT	
A	13	07 10489	PLASTIC SHEET MTG ANGLE-40W	
B	13	07 10462	PLASTIC SHEET MTG ANGLE	
all	14	07 10332	PLASTIC SHEET MTG STRIP	
all	15	54C241CP	PLASTIC SHT .080X24" EA.=1FT	
all	16	15K041S	HEXCAPSCR 1/4-20UNC2AX1 SS18-8	
all	17	15G164NE	HEXLOKNUT NYL 1/4-20 UNC2A SS.	
all	18	15K086	HXCAPSCR 3/8-16NCX3/4 SS18-8	
all	19	15U245A	FLTWASH 25/64IDX1.25ODX3/32 S/	
all	20	15U260	LOCKWASHER MEDIUM 3/8 SS18-8	
all	21	15G206	HEXNUT 3/8-16 UNC2 SS 18-8	
all	22	15K083V	BUTSOKCAPSCR 3/8-16X3/4 SS18-8	
all	23	15K153	HXCAPSCR 1/2 -13 X 1 +1/4 SS	
all	24	15U310	LOKWASHER REGULAR 1/2 SS18-8	
all	25	15U310S	FLATWASH-SS .53 X 1.37 .187T	
all	26	15G234B	HEXNUT 1/2-13UNC2B BRASS	
all	27	15K052	HXCAPSCR 5/16-18UNC2AX3/4 SS18	
all	28	15U205	LOCKWASHER MEDIUM 5/16" 18-8SS	

Pellerin Milnor Corporation
P. O. Box 400, Kenner, LA 70063-0400

Litho in U.S.A.

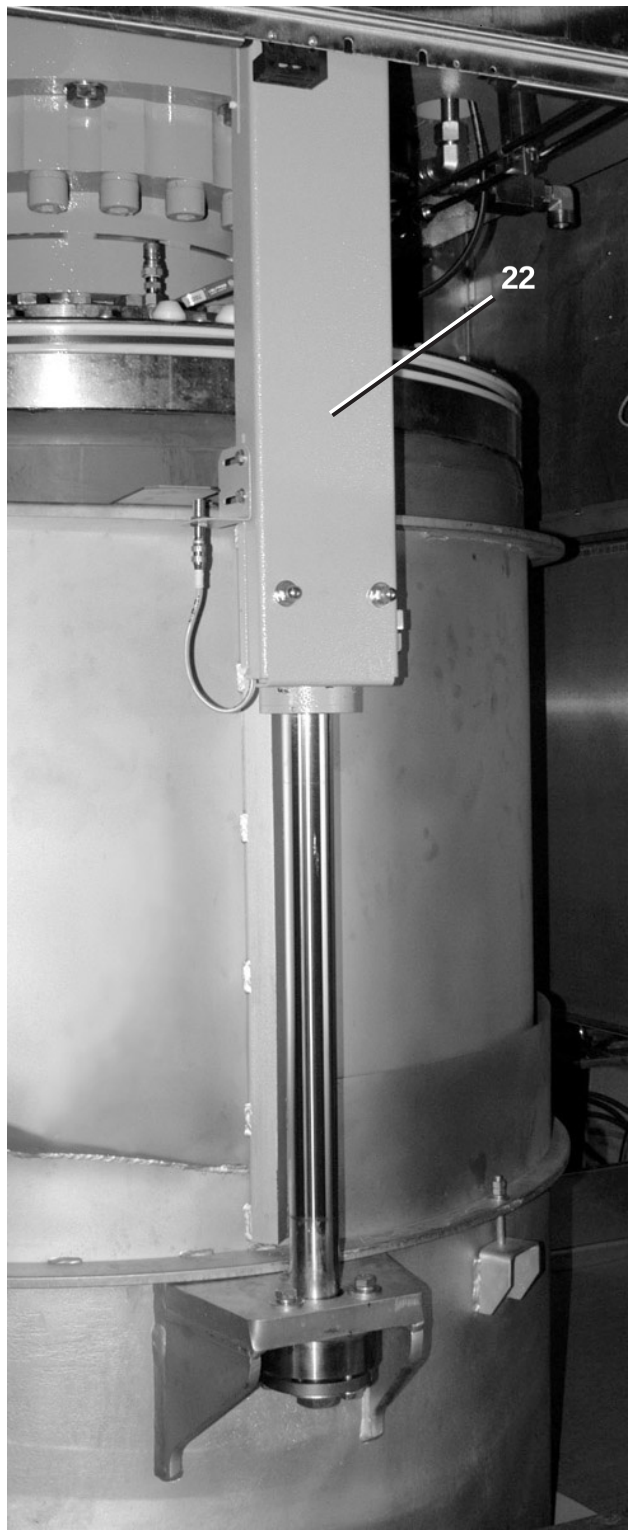

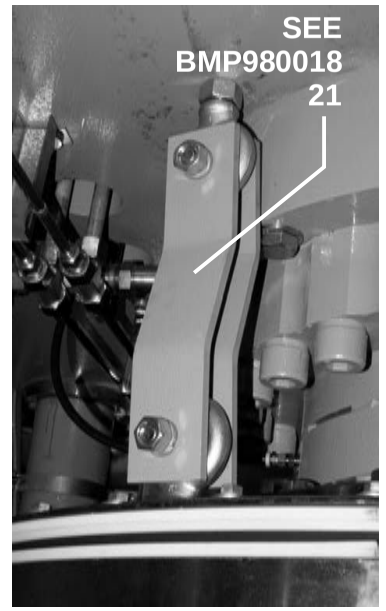

DIAPHRAGM SAFETY BAR
(INSTALL BEFORE SERVICING, SEE MSOP0967AE.)

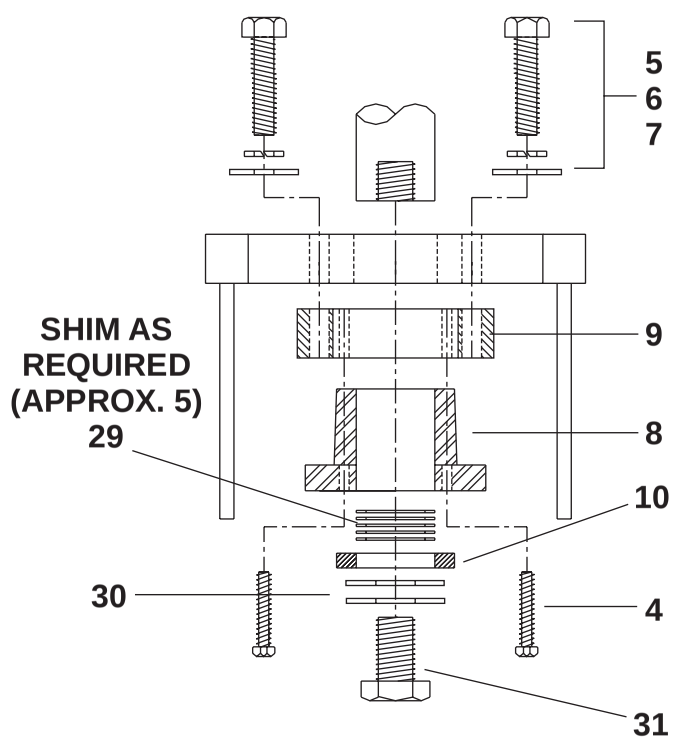

CYLINDER ROD BUSHING ASSEMBLY

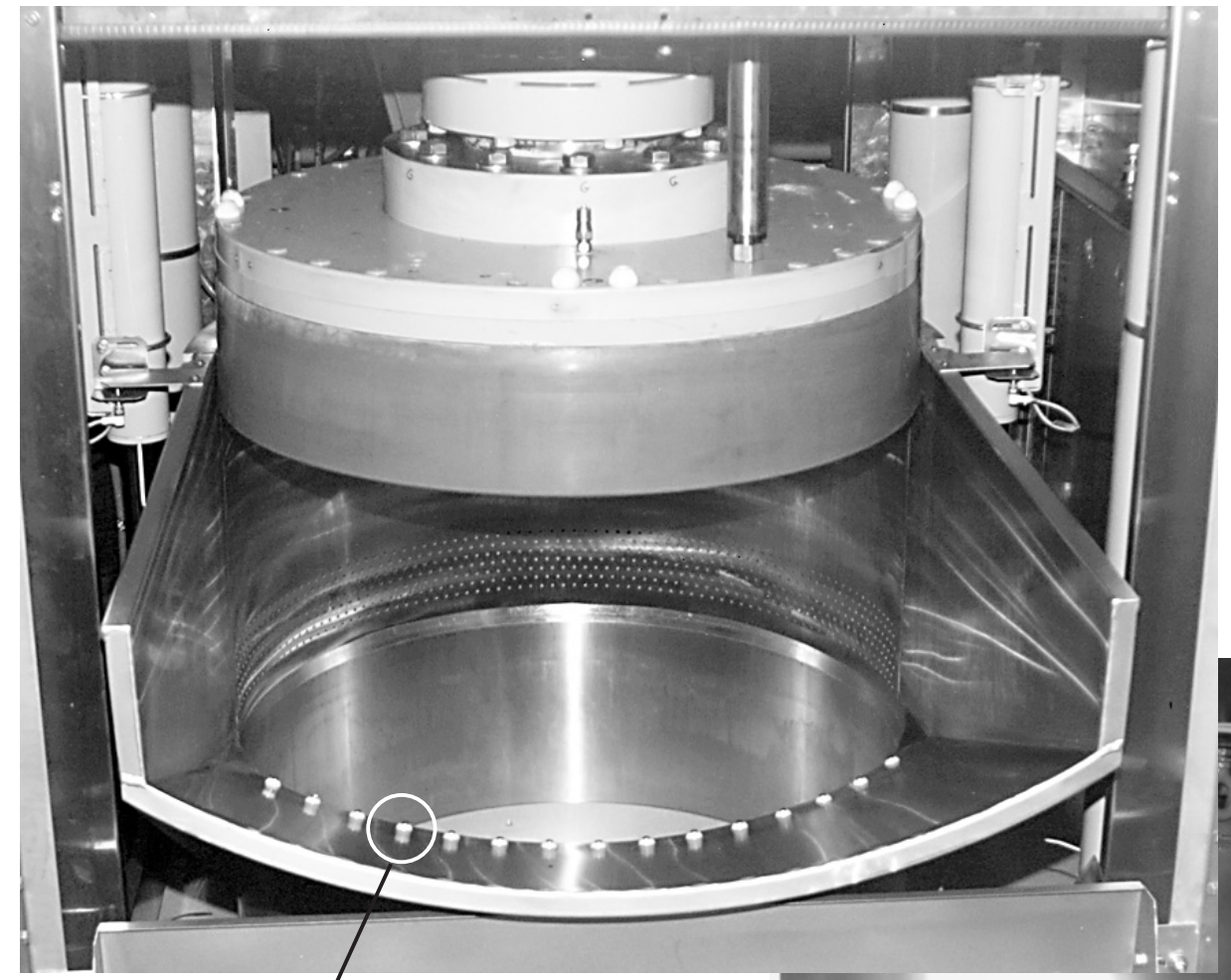

12,13,14,15 (15 PLACES) INCOMPLETE TRANSFER CHUTE SENSOR

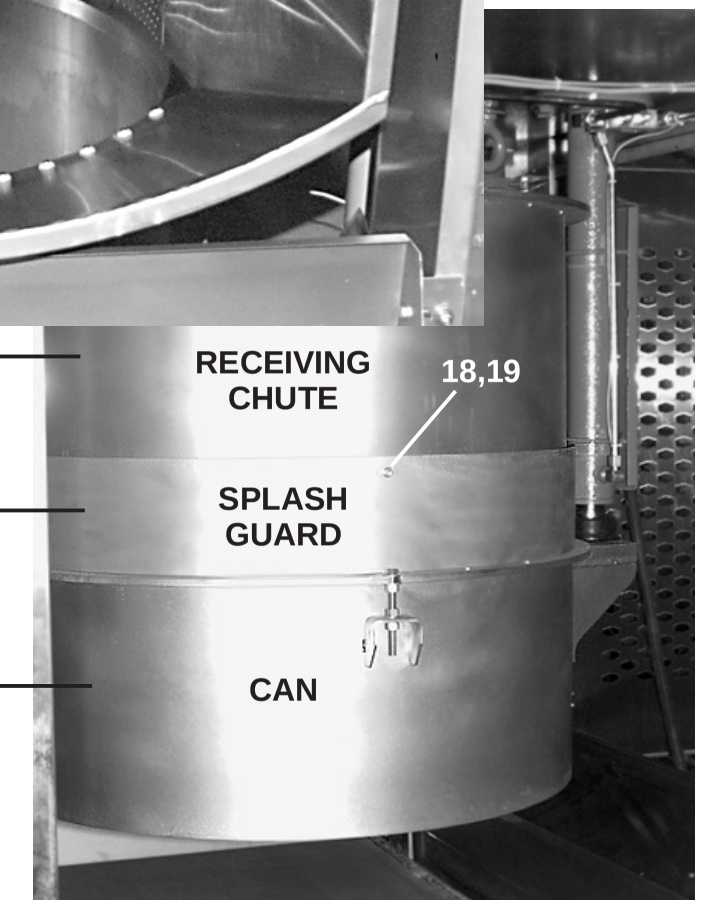

Pellerin Milnor Corporation
P. O. Box 400, Kenner, LA 70063-0400

Litho in U.S.A.

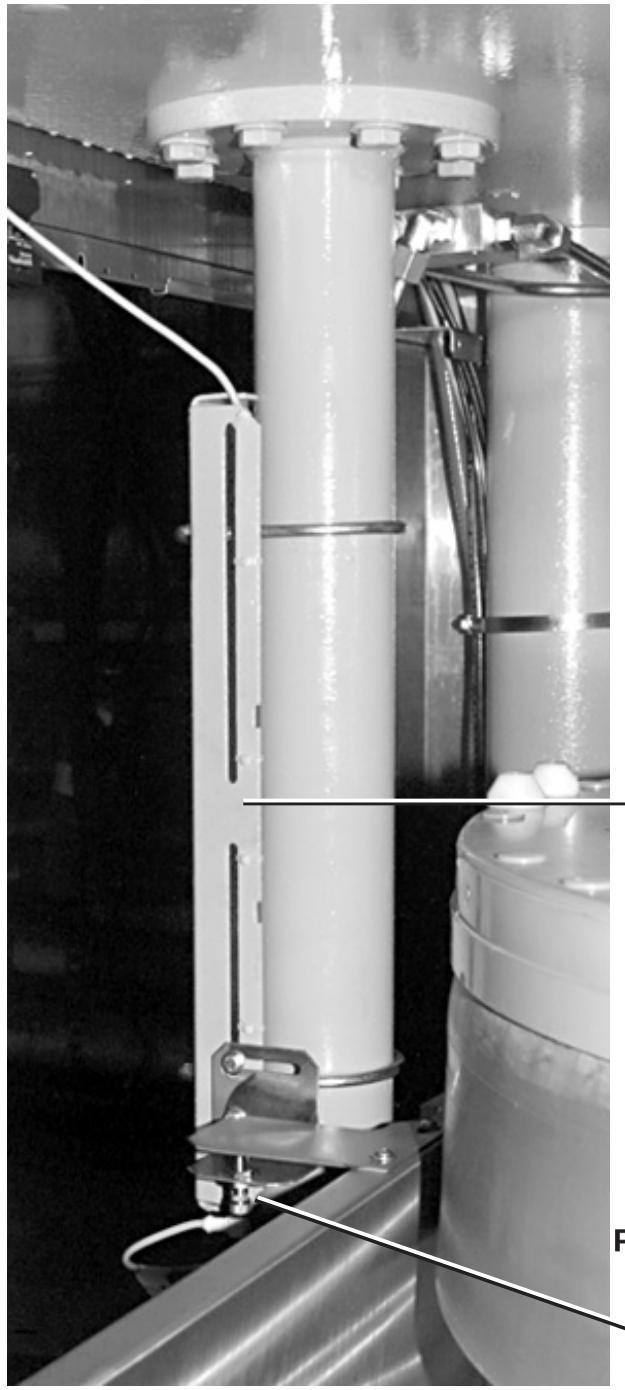

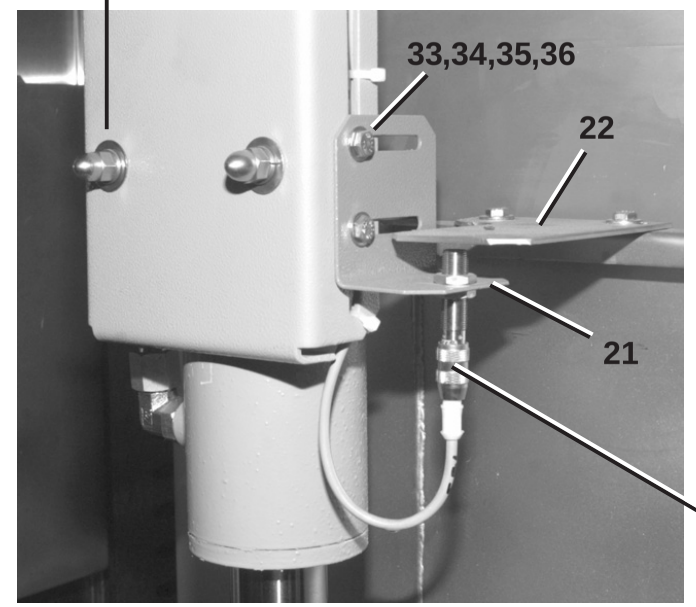

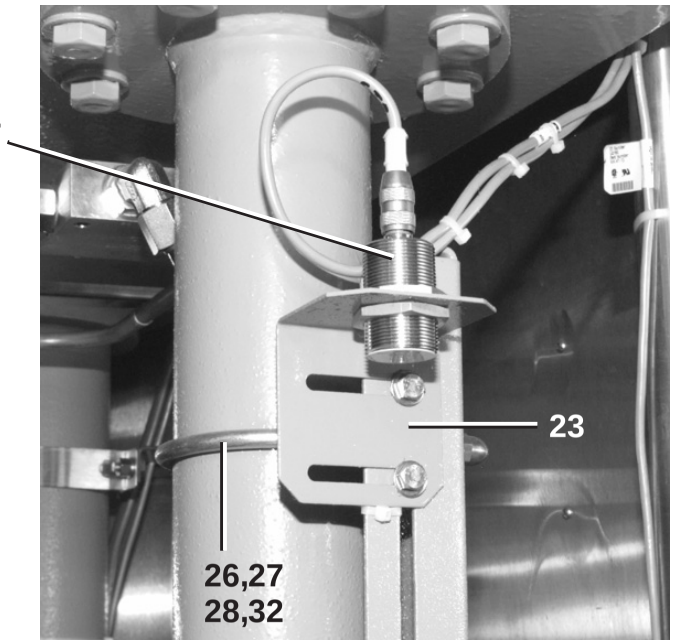

CAN
FULLY DOWN
PROXIMITY
SWITCH

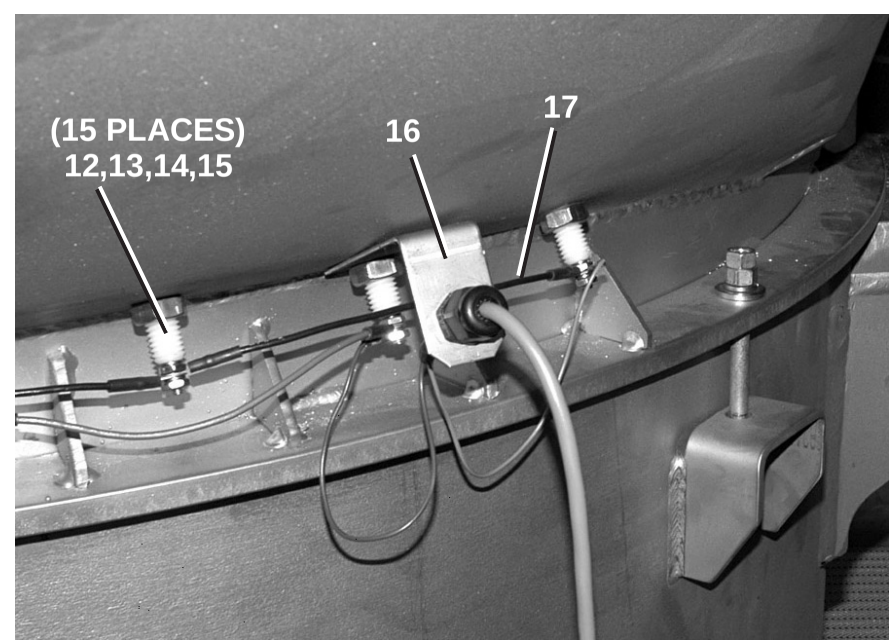

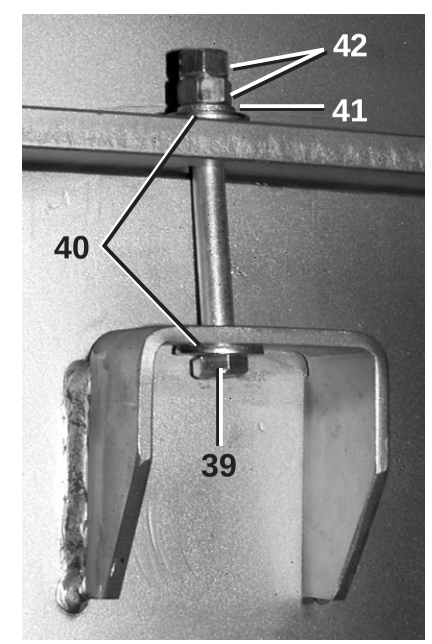

TYPICAL 6 PLACES

Pellerin Milnor Corporation
P. O. Box 400, Kenner, LA 70063-0400

Litho in U.S.A.

Parts List—Receiving Chute and Can

Find the correct assembly first, then find the needed components. The item letters (A, B, C, etc.) assigned to assemblies are referred to in the "Used In" column to identify which components belong to an assembly. The item numbers (1, 2, 3, etc.) assigned to components relate the parts list to the illustration.

Used In	Item	Part Number	Description	Comments
			ASSEMBLIES	
	A	G80CC005	SSPRESS CAN INSTL-110KG	
	B	A80CC004	CAN CYL ROD BUSHING-50/31 BAR	
	C	A80CP002	CAN PROX ASSY-MP1A03	
	D	A80CS001	CHUTE SENSOR ASSY	
	E	A80CC005	CAN CYL-COUNTERBAL ASSY-MP1A03	
			COMPONENTS	
all	1	W7-10510	SSPRESS CHUTE 48"X35DEG WLMT	
all	2	Y7 10032	SSPRESS 48DX22.5H CAN-MACHINED	
all	3	07 10373	SPLASH GUARD 48"CHUTE-ROLLED	
B	4	15K116	HEXFLGSCR 3/8-16X1.75 GR8 ZINC	
B	5	15K191C	HEXCAPSCR 1/2-13X2.5 GR8CHROME	
B	6	15U310	LOKWASHER REGULAR 1/2 SS18-8	
B	7	15U310S	FLATWASH-SS .53 X 1.37 .187T	
B	8	56Q2ASFNIP	2"BUSHING QD TYPE"SF" NIPLT	
B	9	X7 10111	QD HUB 1.50LG BUSHING	
B	10	X7 10046	CAN CYL ROD END SPACER-50BAR	
D	12	X7 10322	CHUTE SENSOR NYLON BOLT	
D	13	15N153A	TRUSLTMACCHSCR10-24X1.75 18-8S	
D	14	15G231S	HXFINJAMNUT 1/2-13UNC2B SS18-8	
D	15	15U160	LOCKWASHER MEDIUM #10 SS18-8	
D	16	07 10339	SENSOR WIRE CONN BRKT	
D	17	10Y9B083S	HARNESS FOR SENSOR PRESS	
all	18	15U188	FLTWASH 1/4 STD COMM SS18-8	
all	19	15G180	HEXNUT 1/4-20 BRASS	
All	21	AHT10030B	DIAPHM SAFETY BAR ASSY-MP1A03	
C	22	07 10384	LOADCHUTE PROX.SW BRKT	
C	23	07 10337	RECEIVING CHUTE SW MTG BRKT	
C	24	07 10337A	CHUTE PROX.SW BRKT-12MM	
C	25	07 10338	SSPRESS CHUTE TARGET	
all	26	15U245	FLTWASH 3/8 STD COMM 18-8 SS	
all	27	15U260	LOCKWASHER MEDIUM 3/8 SS18-8	
all	28	27A035	UBOLT 3/8-16 3.625"BETWEN LEGS	
B	29	15U404B	19 GA ADJWASH =BRGHOUS ZINC	
B	30	02 15630	FLATWASH 2.75 X .25+ZINC PLT	
B	31	15K225A	HEXCAPSCR 5/8-11X2.5 GR9 ZINC	
All	32	15G221	HEXCASTLENUT 3/8-16UNC2 SS18-8	
C	33	15N174	HXCAPSCR 1/4-20UNC2X5/8SS18-8	
C	34	15U188	FLTWASH 1/4 STD COMM SS18-8	
C	35	15U181	LOCKWASHER MEDIUM 1/4 SS18-8	
C	36	15G170	HEXNUT 1/4-20UNC2 SS18-8	
C	37	09RPS30ADS	PROX SW QK CONN 30M NO-DC SHLD	
C	38	09RPSDC095	CON.90DEG FEMALE DC 3A300V 5M	
all	39	15K140T	HEXCAPSCR 3/8-16 X 4.75 SS 18-	
all	40	15U246	FLATWASHER 1"ODX25/64IDX1/8"30	
all	41	15U260	LOCKWASHER MEDIUM 3/8 SS18-8	
all	42	15G206B	HEXNUT 3/8-16UNC2 BRASS	

Can Counter Balance Valves & Fittings

MP1601CL,CR,L,R MP1602CL,CR,L,R MP1603CL,CR,L,R MP1604CL,CR,L,R MP1A03CL,CR,L,R

Pellerin Milnor Corporation
P. O. Box 400, Kenner, LA 70063-0400

Litho in U.S.A.

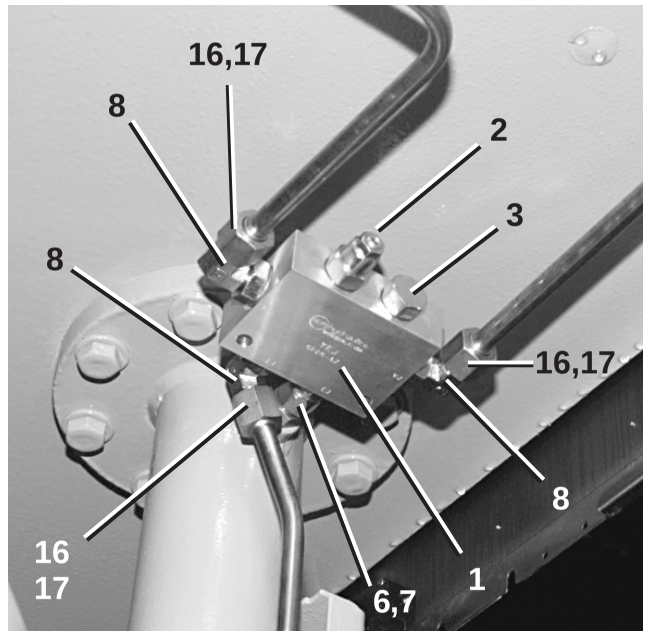

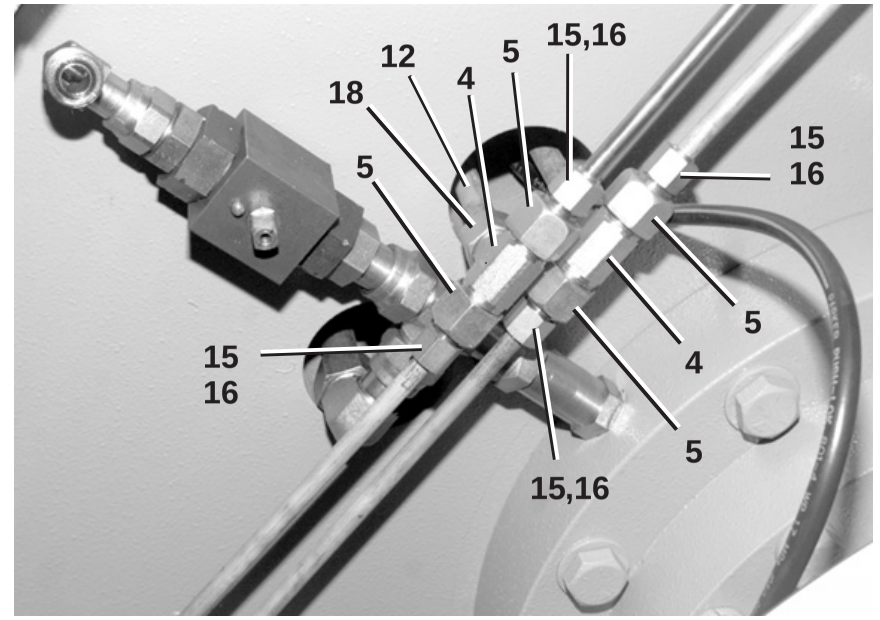

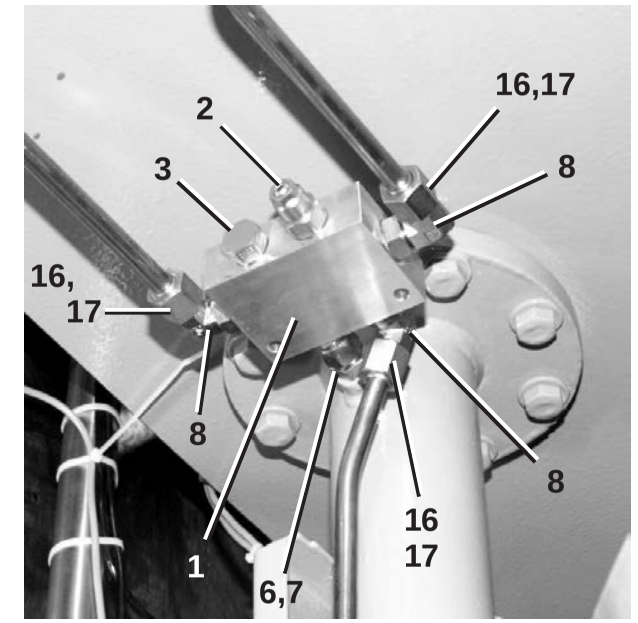

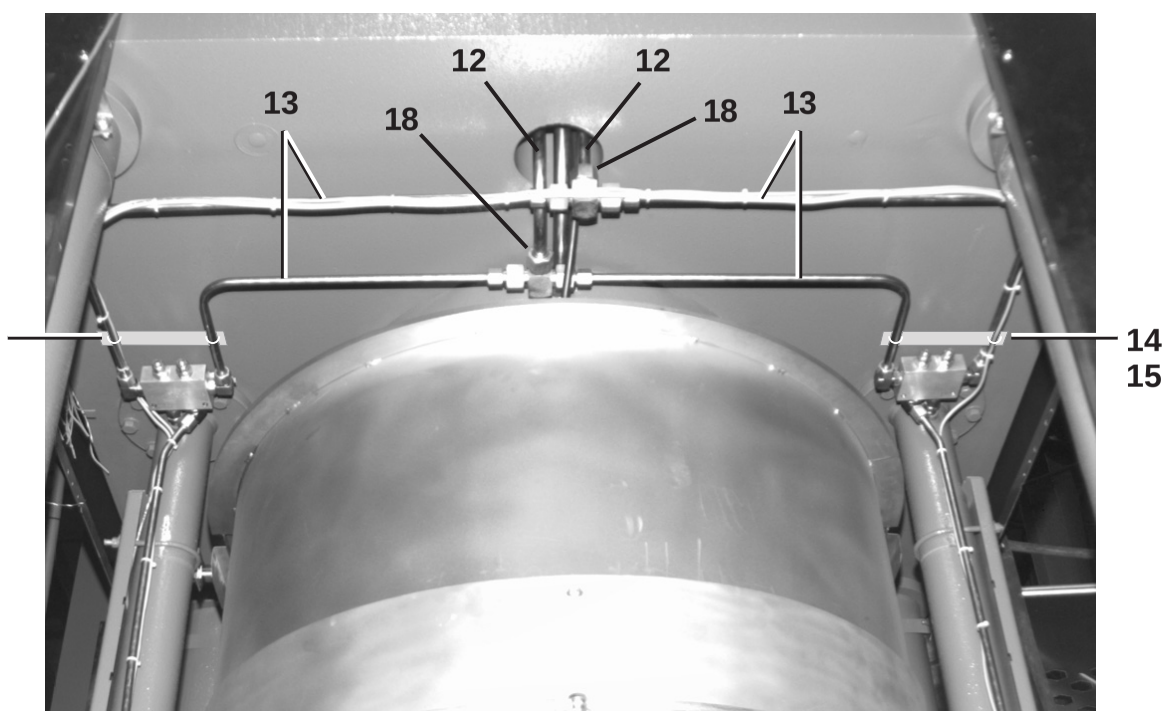

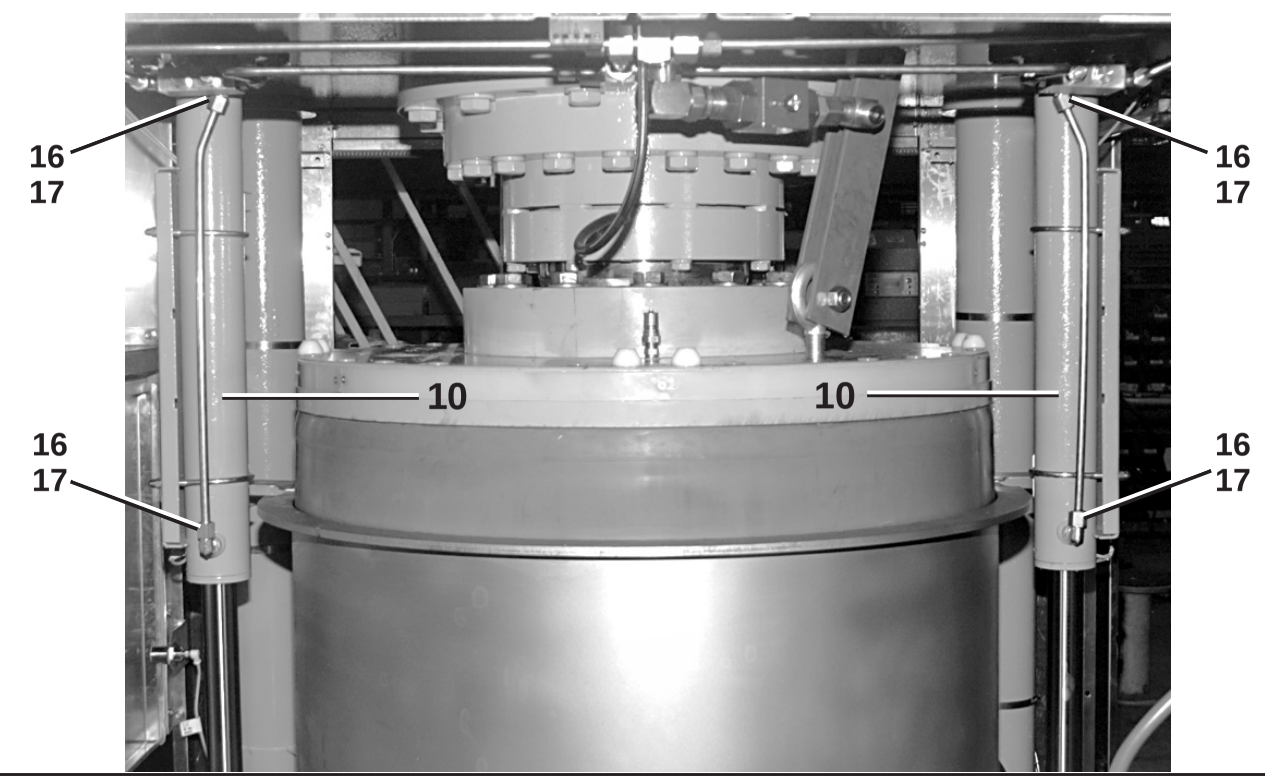

Pellerin Milnor Corporation
P. O. Box 400, Kenner, LA 70063-0400

Litho in U.S.A.

Parts List—Can Counter Balance Valves & Fittings

Find the correct assembly first, then find the needed components. The item letters (A, B, C, etc.) assigned to assemblies are referred to in the "Used In" column to identify which components belong to an assembly. The item numbers (1, 2, 3, etc.) assigned to components relate the parts list to the illustration.

Used In	Item	Part Number	Description	Comments
			ASSEMBLIES	
	A	A80CC001	CAN CYL-COUNTERBAL ASSY	MP1601/2/3/4
	B	A80CC005	CAN CYL COUNTERBAL ASSY MP1A	MP1A03
			COMPONENTS	
all	1	96DH471	COUNTERBALANCE VALVE-SUN BODY	
all	2	96DH471A	CARTRIDGE-COUNTERBAL.SUN	
all	3	96DH410	CARTRIDGE, SUN CHECKVALVE	
all	4	52ZT00S002	TUBEFIT 3/4TEE #12-JLO-S	
all	5	52ZL00S008	TUBEFITENDRED 3/4TX1/2T FACSL	
all	6	52XY0KR032	STRADPT 1/2MJICX0R#6400-8-8-0	
all	7	52XY0KR034	STRADPT 1/2M0RXFJIC#6402-8-8-0	
all	8	52ZJ00S003	TUBEFIT1/2"90EL FACESEAL 0RING	
A	10	27E163A17A	HYD.CYL.3.25"BOREX 16.25"STK.	
	10AA	27E163A17J	2003184A REPAIR KIT 3.25"BORE=JARP CYL.	
	10AB	27E163A17R	2004202A REPAIR KIT 3.25"BORE=PRINCE	
B	10	27E163A20A	HYD.CYL.3.25"BOREX 20.25"STK.	
	10AA	27E163A17J	2003184A REPAIR KIT 3.25"BORE=JARP CYL.	
	10AB	27E163A17R	2004202A REPAIR KIT 3.25"BORE=PRINCE	
all	12	87Z075X095	SS TUBE 3/4"ODX.095 WL304SMLS*	
all	13	87Z00KX065	TUBE=1/2"ODX.065WALL 304 *20RM	
all	14	07 10266	TUBING TIE-IN CHANNEL	
all	15	27A098	TCLIPS 5/8OD #6ZF07 EA=1 TCLIP	
all	16	52ZN00S004	TUBEFIT 1/2"NUT FACESEAL-ORING	
all	17	52ZN00S005	TUBEFIT ½"PAFLANGE SLEEVE	
All	18	52ZN0PS001	TUBEFIT 3/4"NUT #12BL-S	

Pneumatic Piping and Assemblies

3

Pneumatic Schematic

MP1601CL,CR,L,R MP1602CL,CR,L,R MP1603CL,CR,L,R MP1604CL,CR,L,R MP1A03CL,CR,L,R

Pellerin Milnor Corporation
P. O. Box 400, Kenner, LA 70063-0400

Litho in U.S.A.

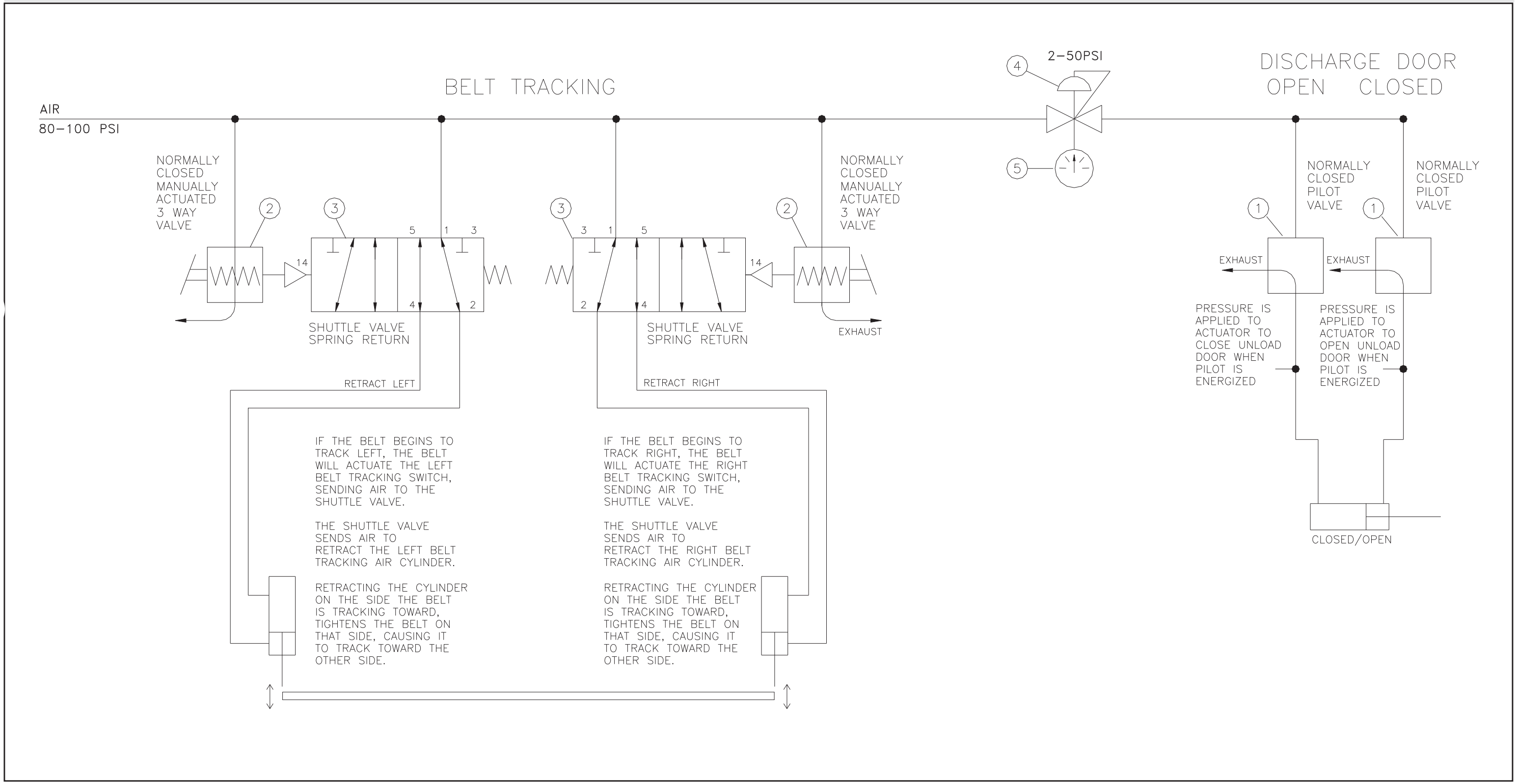

Pellerin Milnor Corporation
P. O. Box 400, Kenner, LA 70063-0400

Litho in U.S.A.

Parts List—Pneumatic Schematic

Find the correct assembly first, then find the needed components. The item letters (A, B, C, etc.) assigned to assemblies are referred to in the "Used In" column to identify which components belong to an assembly. The item numbers (1, 2, 3, etc.) assigned to components relate the parts list to the illustration.

Used In	Item	Part Number	Description	Comments
----------	----------	----------	----------ASSEMBLIES----------	----------
			none	
----------	----------	----------	----------COMPONENTS----------	----------
all	1	96R301A37	1/8" AIRPILOT 3W NC 120V50/60	
all	2	96N005	3WAY AIROP CONT.VLV.CLIPP#MJV3	
all	3	96N0011H	SHUTLVLV 1/4" 4WAY MECHSPRING	
all	4	96J019E	1/4"PRESSREG2-50P R07-200-RNEA	
all	5	30N101	PRESSGAUGE 1/8"BACKCN.0-60PSI	

Conveyor Assemblies

4

Pellerin Milnor Corporation
P. O. Box 400, Kenner, LA 70063-0400

Litho in U.S.A.

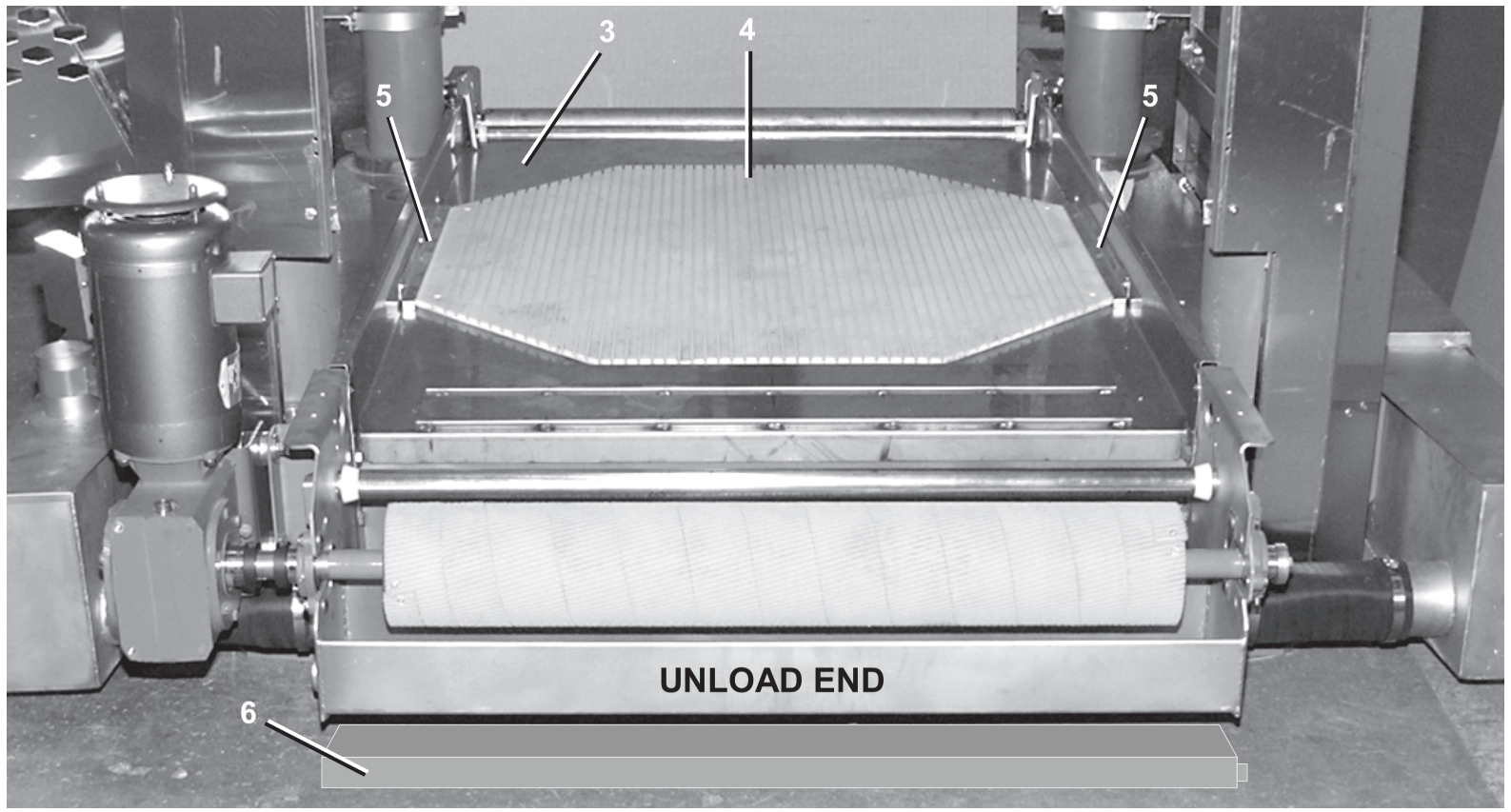

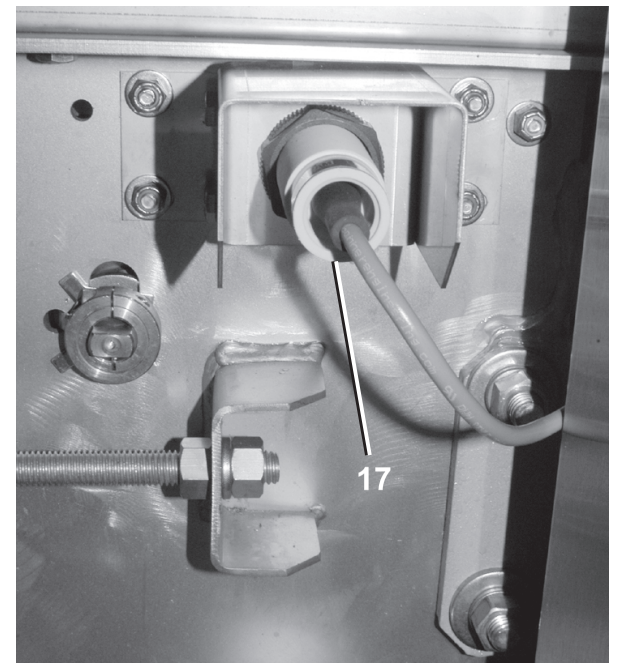

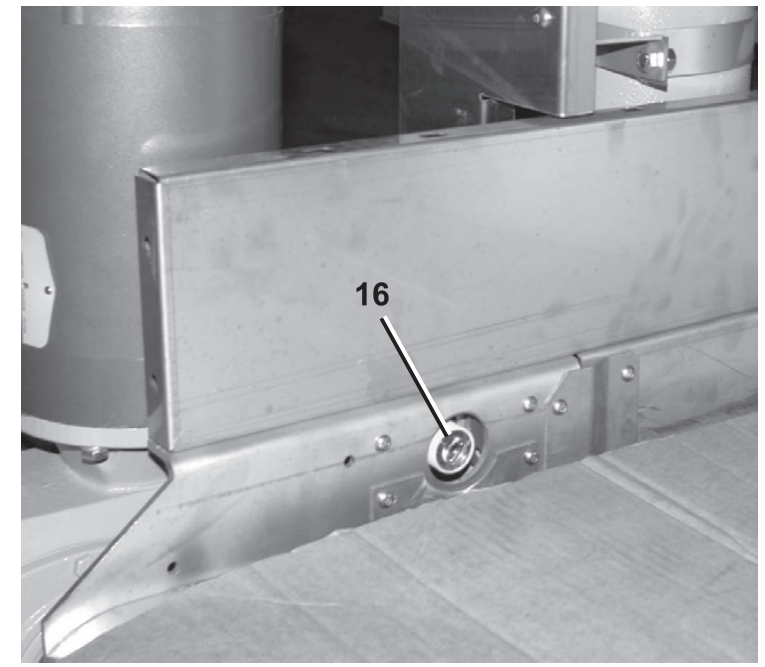

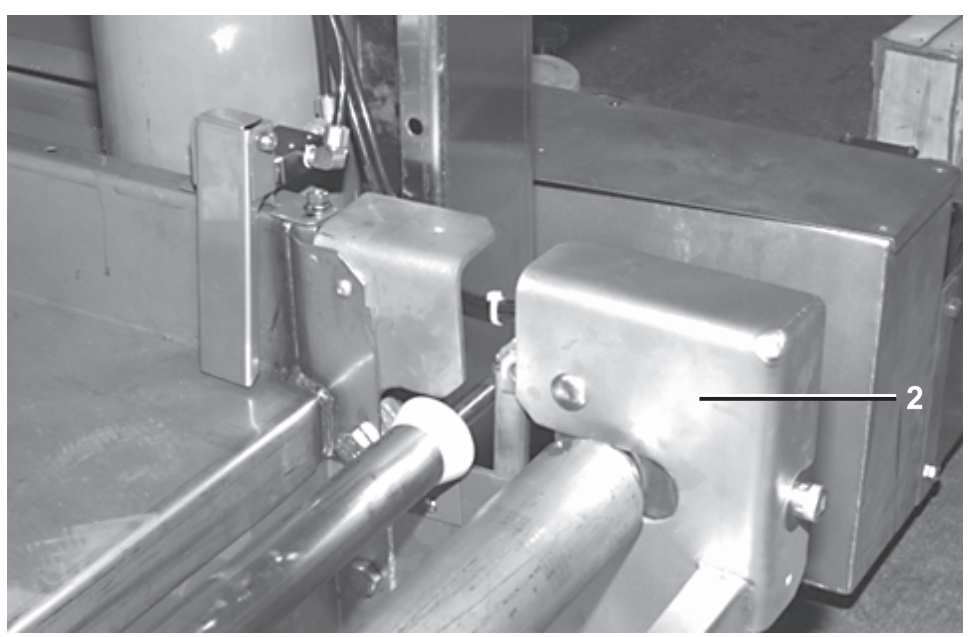

LOAD END IDLER ASSEMBLY

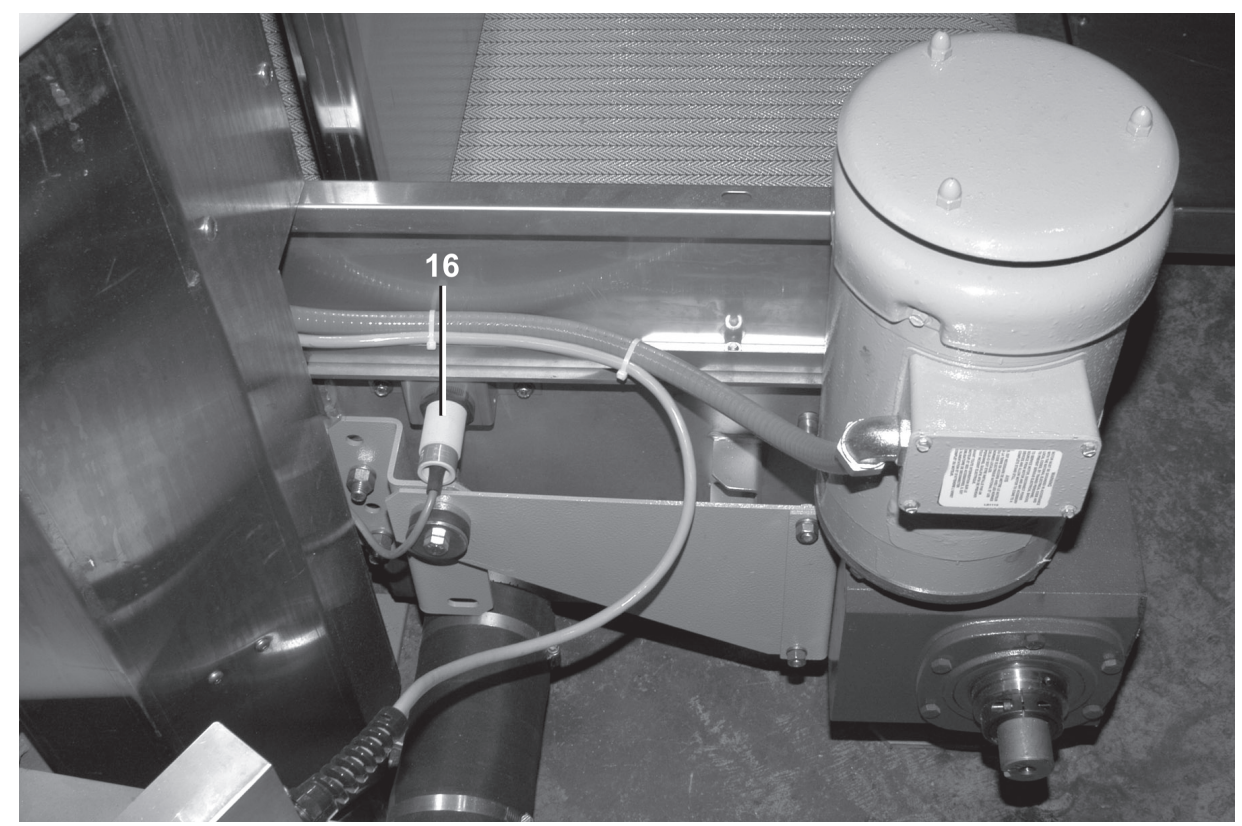

Pellerin Milnor Corporation
P. O. Box 400, Kenner, LA 70063-0400

Litho in U.S.A.

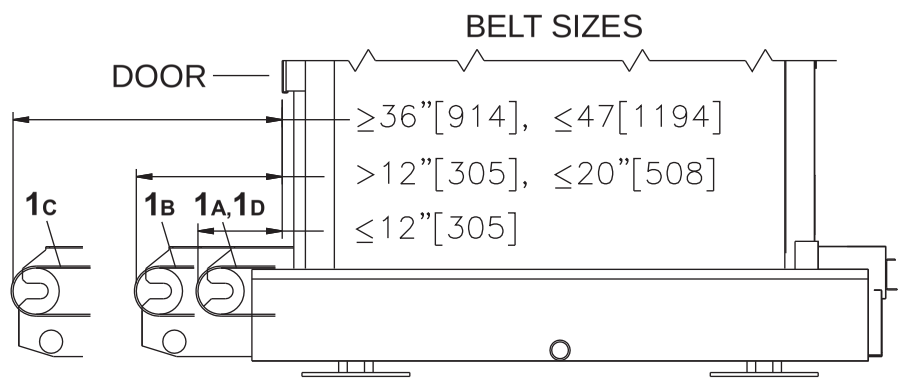

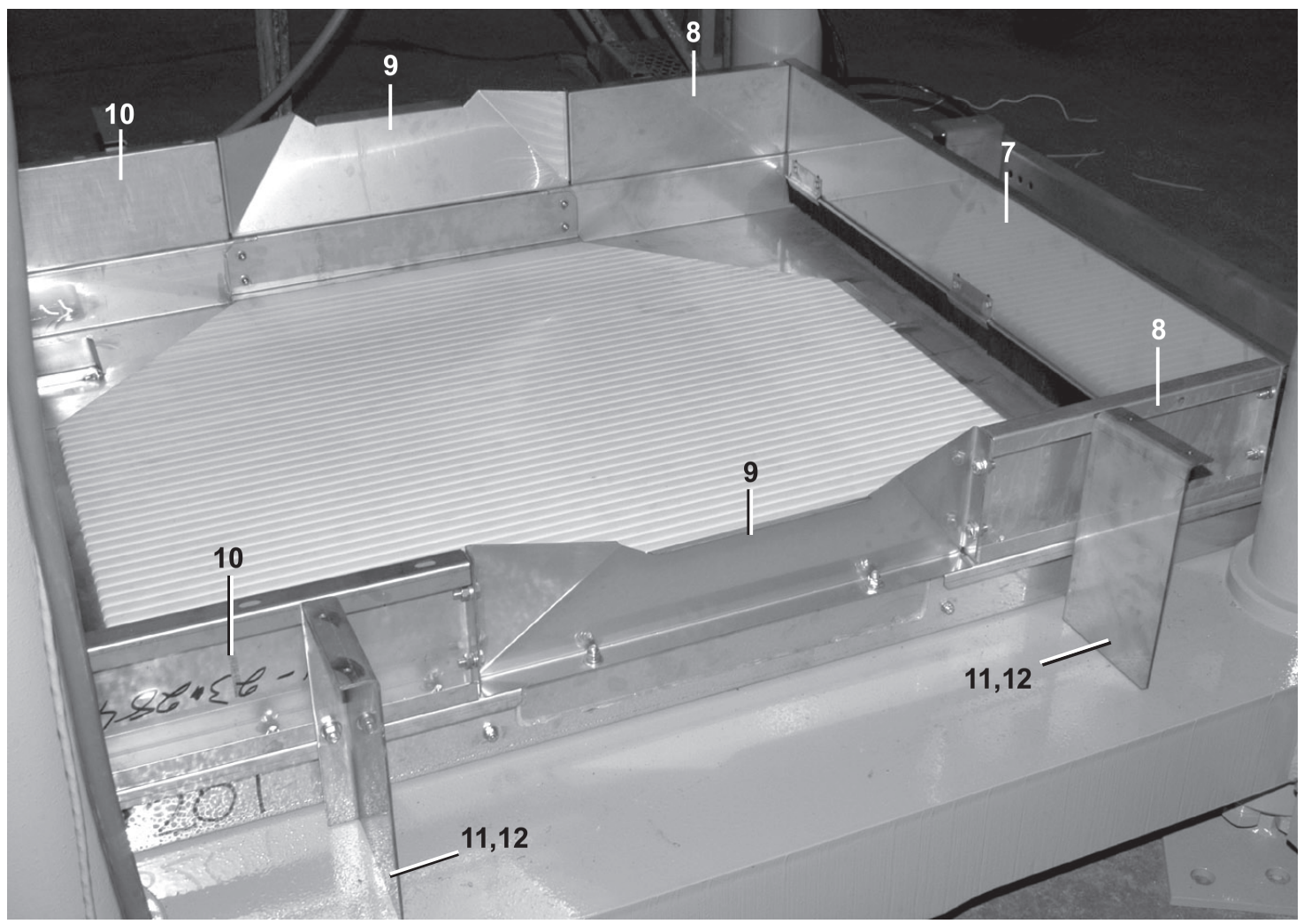

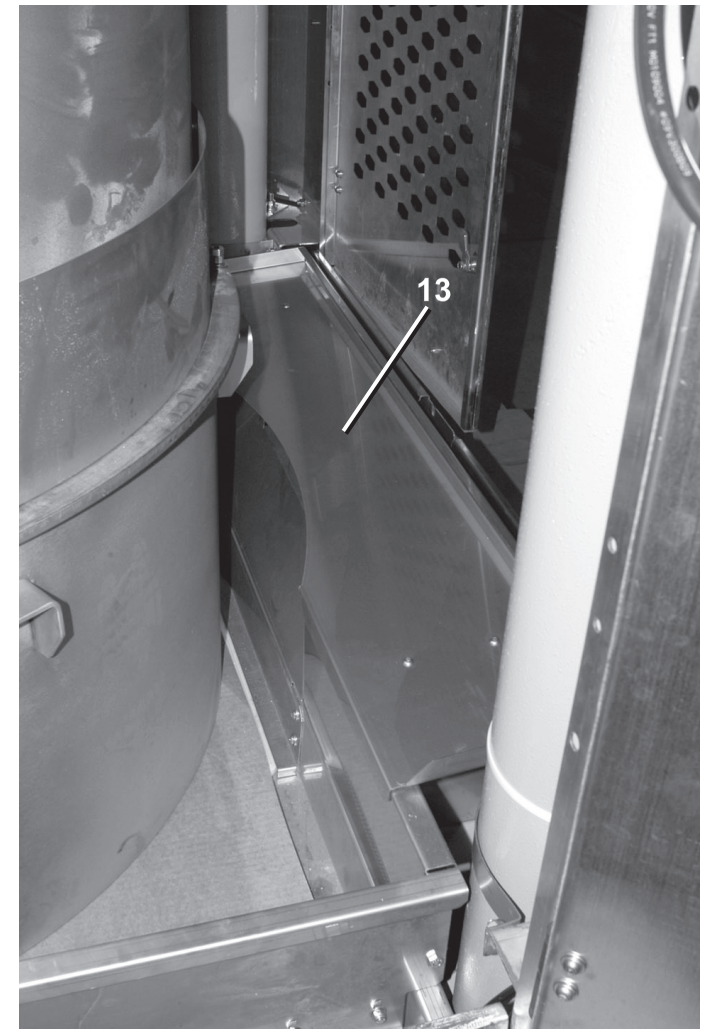

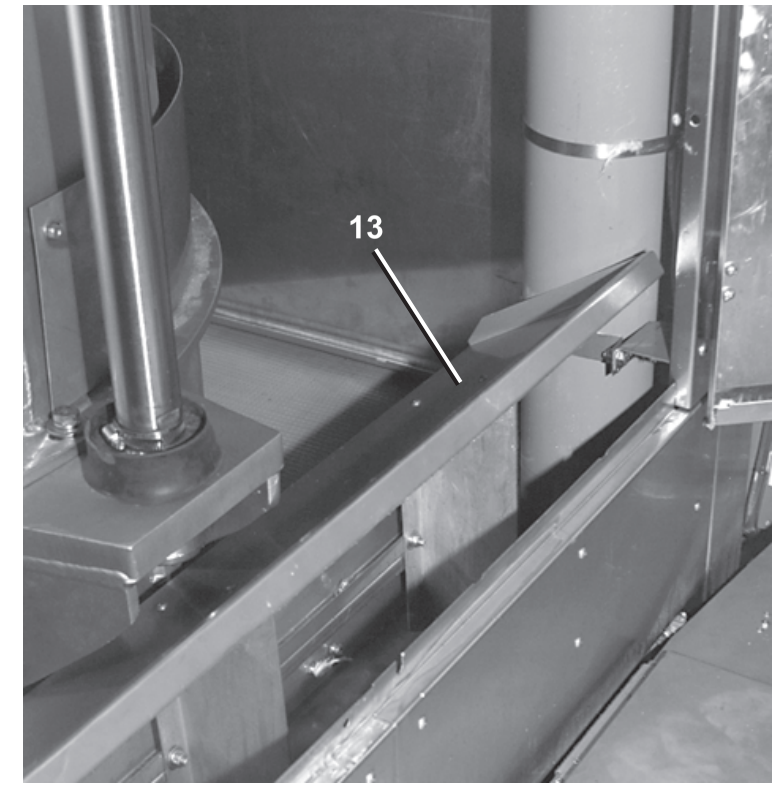

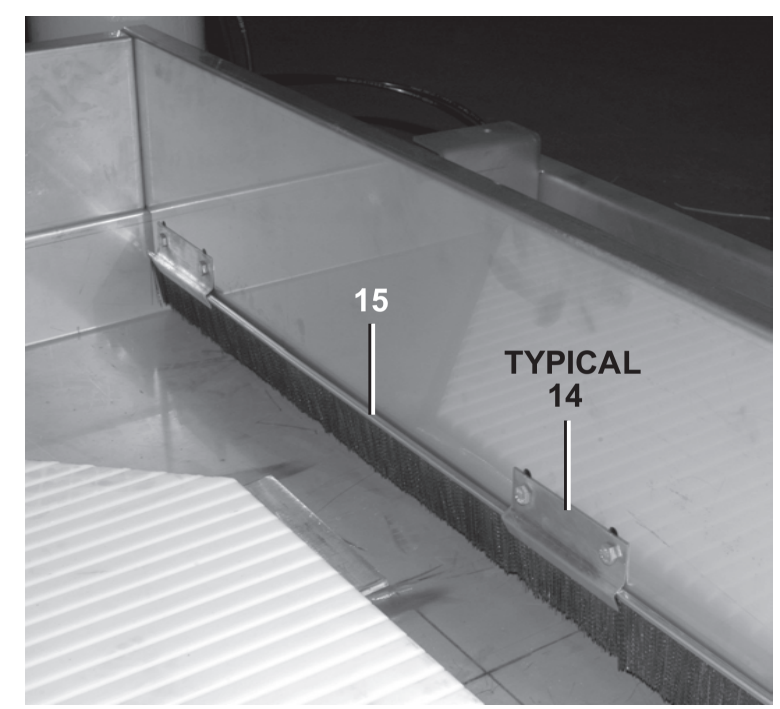

Pellerin Milnor Corporation
P. O. Box 400, Kenner, LA 70063-0400

Litho in U.S.A.

Parts List—Conveyor Installation

Find the correct assembly first, then find the needed components. The item letters (A, B, C, etc.) assigned to assemblies are referred to in the "Used In" column to identify which components belong to an assembly. The item numbers (1, 2, 3, etc.) assigned to components relate the parts list to the illustration.

Used In	Item	Part Number	Description	Comments
			ASSEMBLIES	
	A	ALC420096	SSPRESS CONV 44WX87L	MP1601/2/3/4
	B	ALC420126	SSPRESS CONV 51WX104LG	MP1A03
	C	ALC420099	SSPRESS CONV SIDE ASSY-68.50LG	MP1601/2/3/4
	D	ALC420127	SSPRESS CONV SIDE ASSY-51W	MP1A03
			COMPONENTS	
A	1	54C420	BLT 42"W X 183"L TAURUS 300	MP1603/4 ≤12”
B	1	54C421	BLT 42"W X 199"L DUROTEX 6651	MP1603/4 >12, ≤20”
C	1	54C423	BLT 42"W X 253"L DUROTEX 6651	MP1603/4 ≥36, ≤47
D	1	54C510	BELT 51"W X 216"LG TAURUS 300	MP1A03
all	2	ALC420113	DRIP TRAY LOADEND ASSY	
A	3	W4 23203	CONV BED WLMT-SSPRESS	
B	3	W4 21080	CONV 51W BED WLMT	
A	4	03 80010C	PLASTIC BED 47BAR PRESS	
B	4	03 80010D	PLASTIC 51W BED-MP1A03	
A	5	04 23443	BED HOLD-DOWN ANGLE-SSPRESS	
B	5	04 23138	BED HOLD-DOWN ANGLE-SSPRESS	
all	6	W4 23290A	DRIP PAN WLMT-MP1A03	
A	7	04 23223	SIDE EXT CROSS BRACE-SSPRESS	
B	7	04 21100	SIDE EXT CROSS BRACE-51W BED	
A	8	04 23285	SIDE EXT SSPRESS-15.00LG	
B	8	04 21099	SIDE EXT SSPRESS-20"LG	
all	9	04 23286	SIDE EXT SSPRESS-MIDDLE	
C	10	04 23284	SIDE EXT SSPRESS-32.50LG	
D	10	04 21098	SIDE EXT SSPRESS-45"LG	
all	11	04 23236	SPLASH GUARD MTG BRKT-RT	
all	12	04 23236A	SPLASH GUARD MTG BRKT-LF	
C	13	04 23287	SIDE EXT SPLASH TRAY	
D	13	04 21103	SIDE EXT SPLASH TRAY-MP1A03	
all	14	04 23233	BRUSH HOLDER-SSPRESS CONV	
all	15	97L046	CONVEYOR BRUSH 72"L2"H .014NYL	
all	16	09RPE010R	PHOTOEYE RECEIVER AC	
all	17	09RPE010E	P.E. EMITTER AC #SM303E W/30'	

Unload End Drive Assembly

MP1601CL,CR,L,R MP1602CL,CR,L,R MP1603CL,CR,L,R MP1604CL,CR,L,R MP1A03CL,CR,L,R

Pellerin Milnor Corporation
P. O. Box 400, Kenner, LA 70063-0400

Litho in U.S.A.

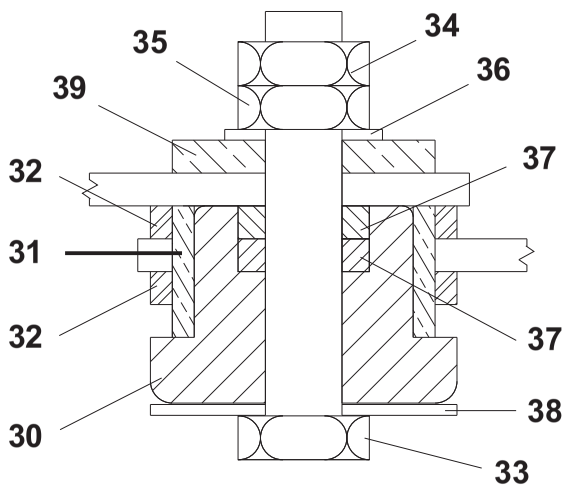

DETAIL A: TORQUE ARM BUSHING

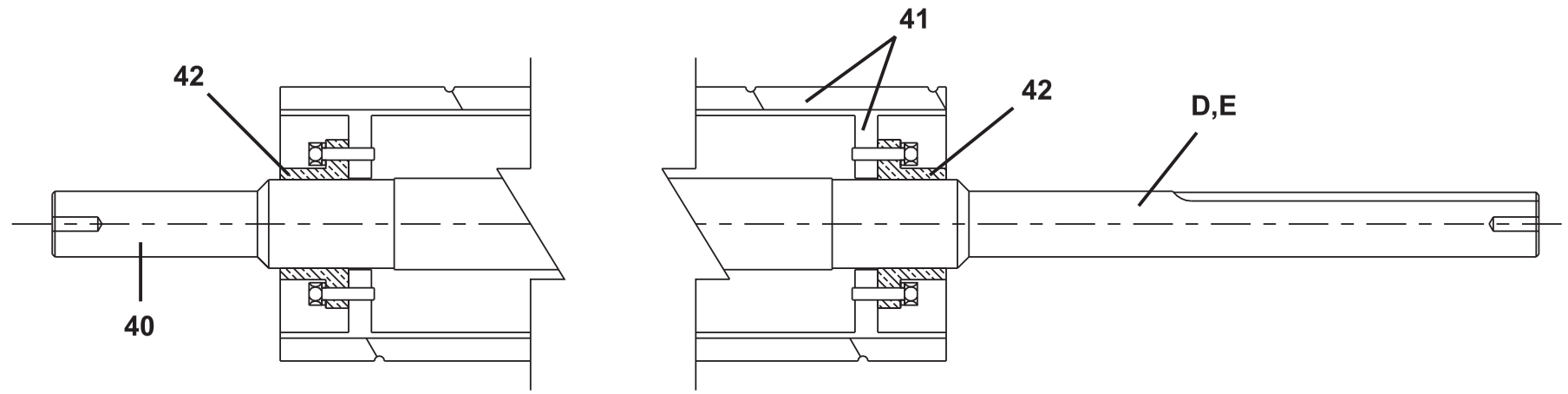

DETAIL B: DRIVE ROLLER

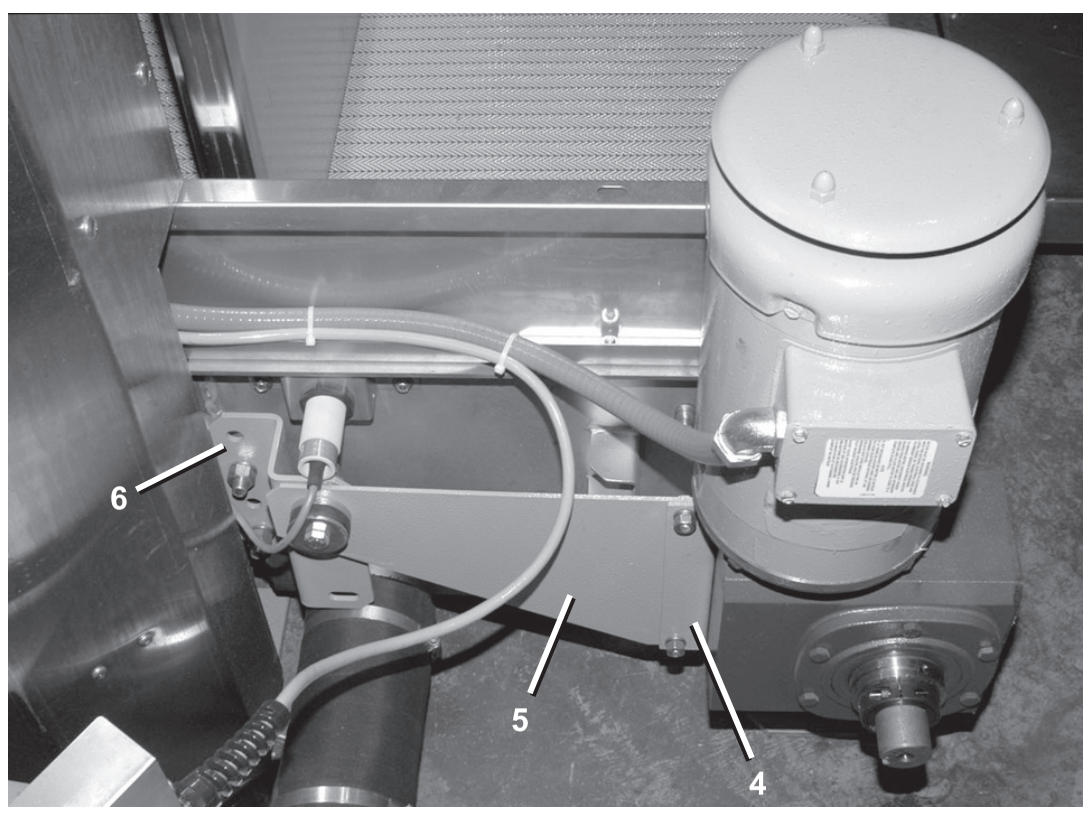

UNLOAD END DRIVE ASSEMBLY

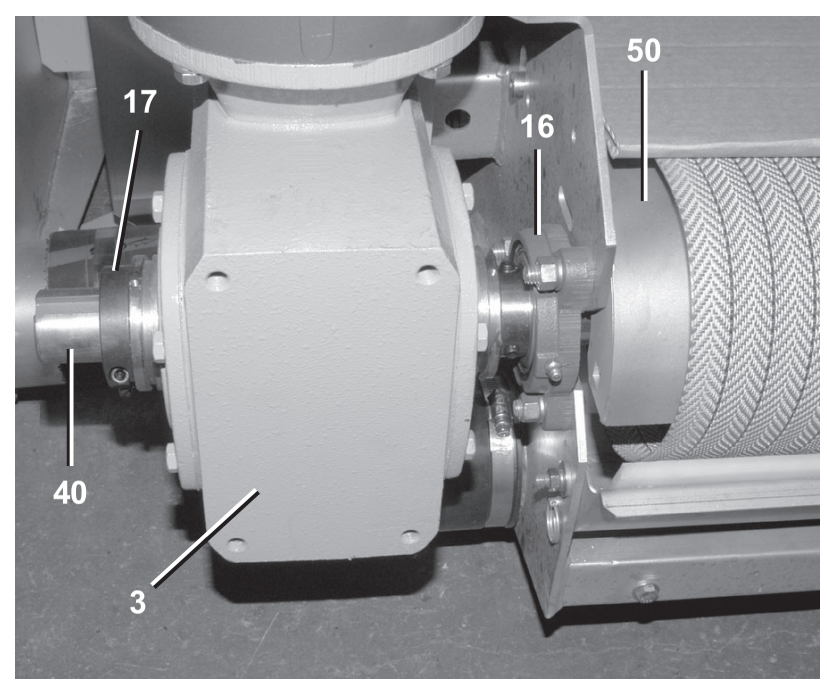

UNLOAD END DRIVE ASSEMBLY

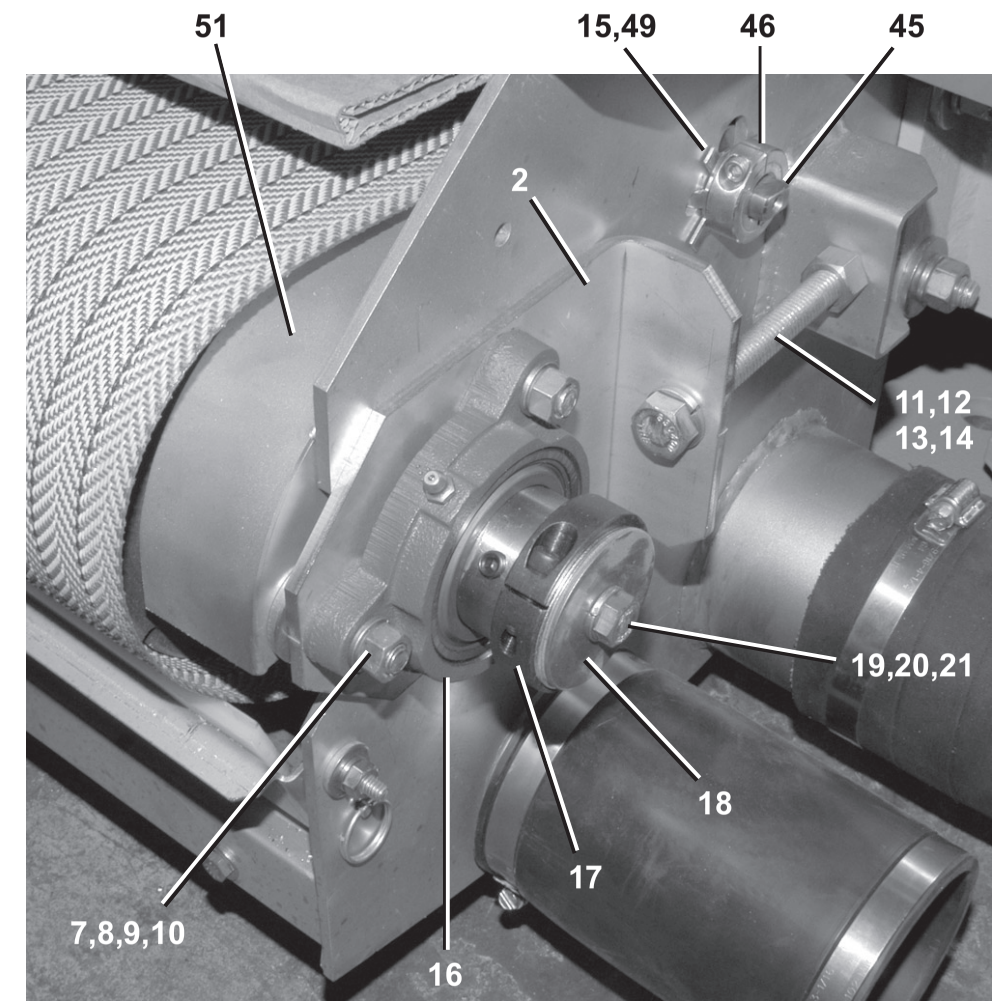

Unload End Drive Assembly

MP1601CL,CR,L,R MP1602CL,CR,L,R MP1603CL,CR,L,R MP1604CL,CR,L,R MP1A03CL,CR,L,R

Pellerin Milnor Corporation
P. O. Box 400, Kenner, LA 70063-0400

Litho in U.S.A.

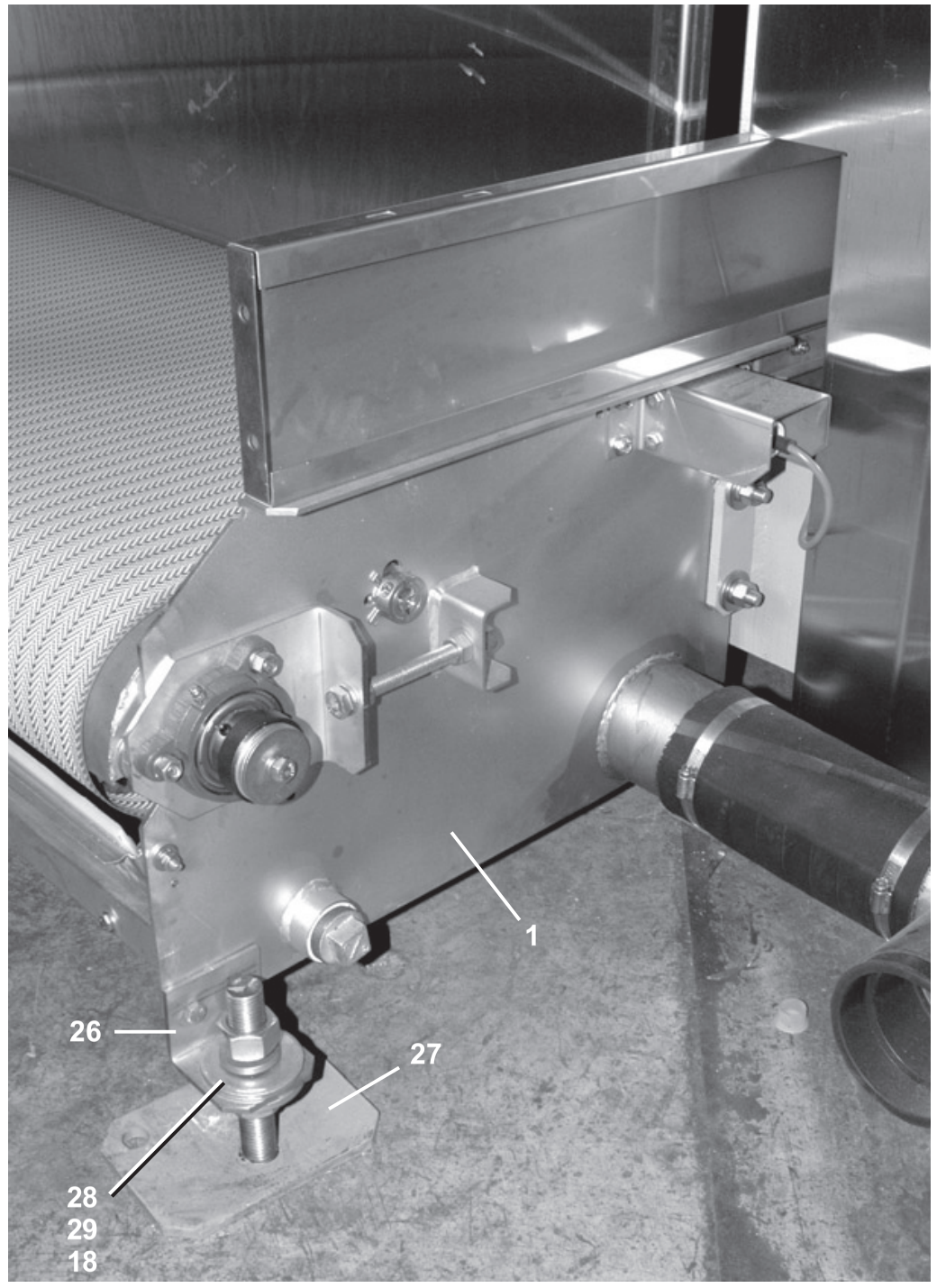

UNLOAD END- NON DRIVE SIDE

PHOTO EYE FILLER PLATE INSTALLED BELOW THE PHOTO EYE AND UNDER THE BELT

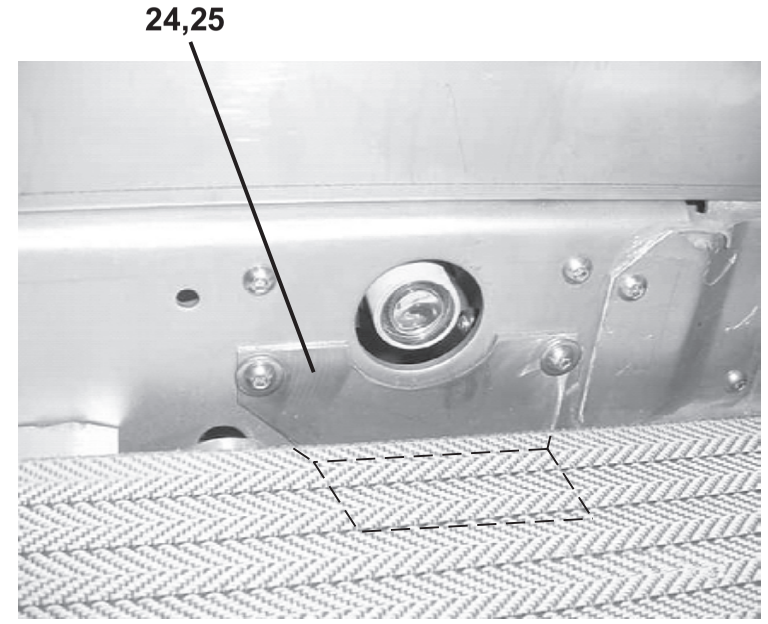

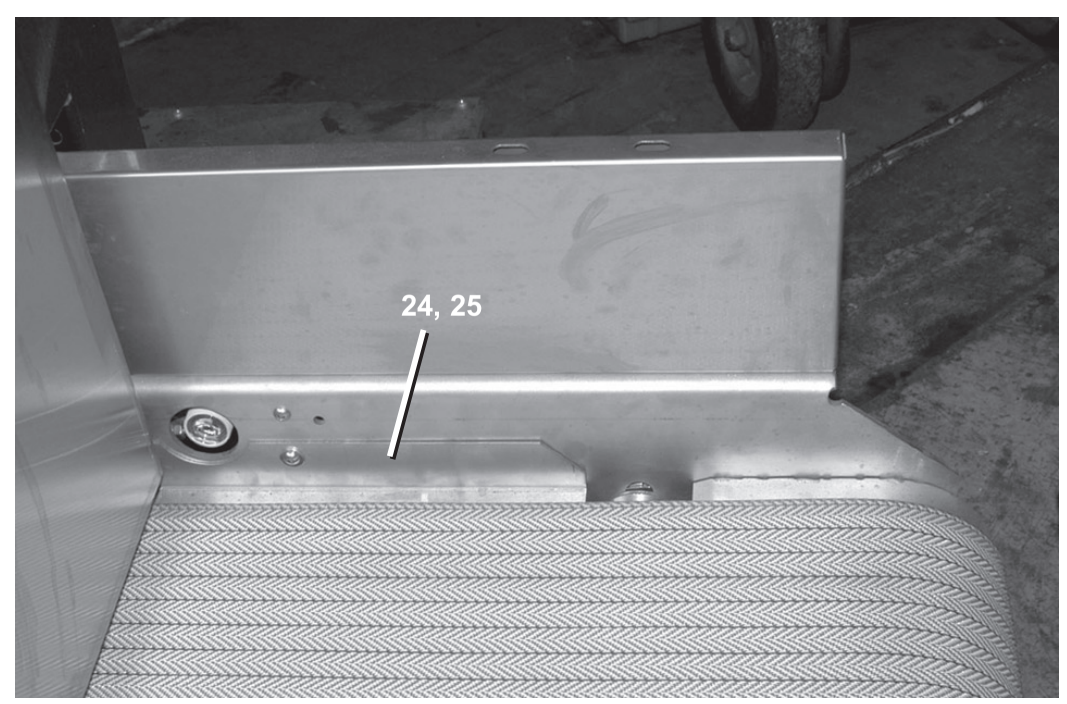

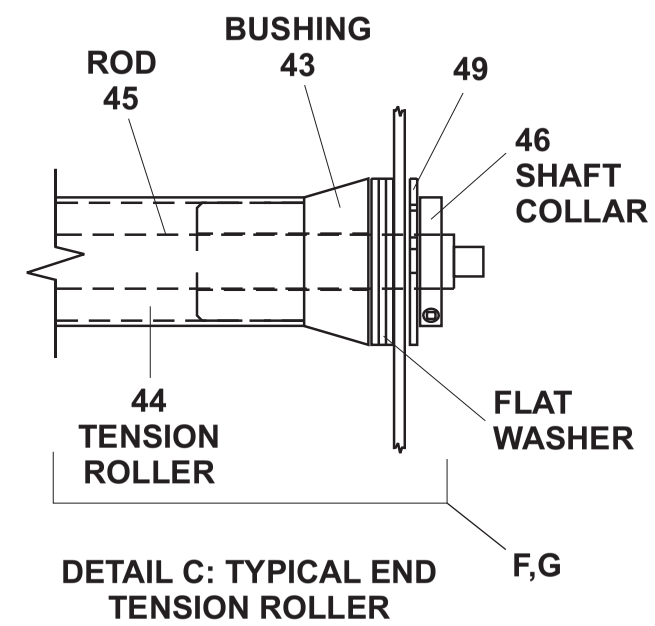

DETAIL C: TYPICAL END TENSION ROLLER

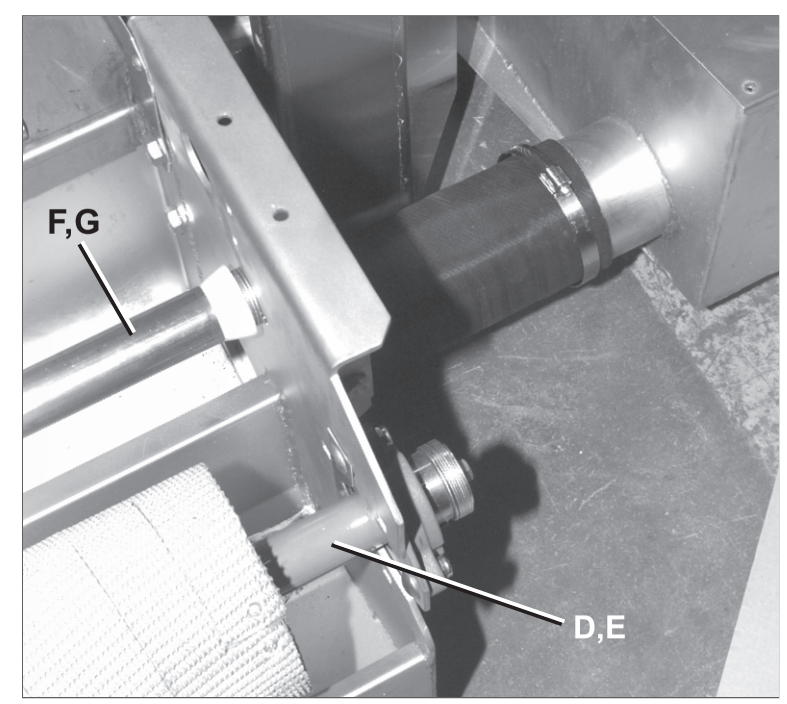

Pellerin Milnor Corporation
P. O. Box 400, Kenner, LA 70063-0400

Litho in U.S.A.

REMOVE AND REPLACE BOLT THROUGH FENDER

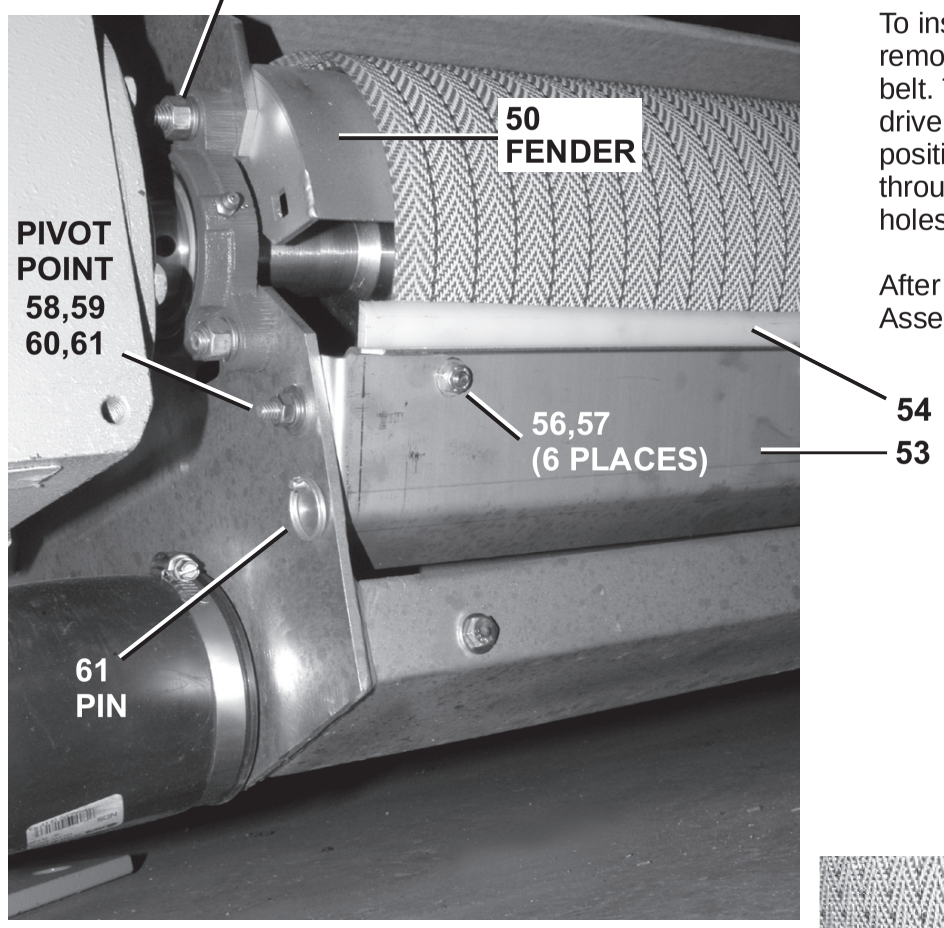

INSTALLING FENDERS

To install fenders to both sides of the discharge roller, remove the idler end roller to allow slack in the belt. The belt can be moved to reach the bolts of the drive end bearing mounts. Remove these bolts, position the fenders in place and re-install the bolts through the fender and through the bearing mounting holes and bearings.

After installing the fenders, install the Roll Wiper Assembly.

ROLL WIPER ASSEMBLY

Parts are available to add the Roll Wiper Assembly to machines not originally equipped with them.
See Parts List.

The picture shows the roll scraper mounting hardware in place. The bolt and nut are a pivot point and the pin is the angle set. (The bolt can be used to lock the position of the scraper if the pin is not used.)

The scraper should be positioned to barely scuff the belt, as shown.

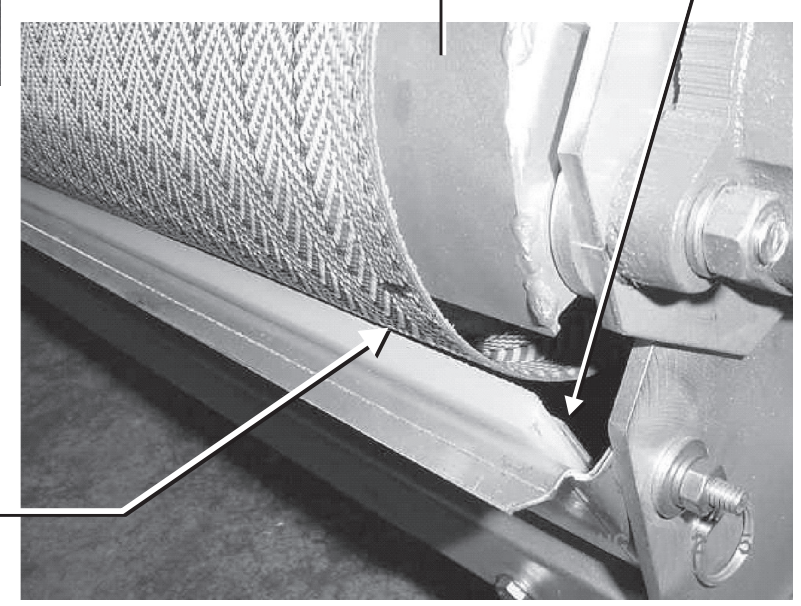

Parts List—Unload End Drive Assembly

Find the correct assembly first, then find the needed components. The item letters (A, B, C, etc.) assigned to assemblies are referred to in the "Used In" column to identify which components belong to an assembly. The item numbers (1, 2, 3, etc.) assigned to components relate the parts list to the illustration.

Used In	Item	Part Number	Description	Comments
			----ASSEMBLIES----	
	A	ALC420097	UNLOAD END DRIVE ASSEMBLY	MP1601,2,3,4
	B	ALC420124	UNLOADEND DRIVE 51W ASSEMBLY	MP1A03
	C	ALC420063	TORQUE ARM BUSHING ASSEMBLY	ALL
	D	APC42005	42W DRIVE LAGGED 1.44-SSPRESS	MP1601,2,3,4
	E	APC50005	51W DRIVE LAGGED 1.437 INPUT	MP1A03
	F	ALC50059	DRIVE SNUBBER ROLLER-SSPRESS	MP1601,2,3,4
	G	ALC50120	DRIVE SNUBBER ROLLER 51W	MP1A03
	H	ALC420130	UNLOADEND ROLLER WIPER ASSY	MP1601,2,3,4
	J	ALC420130A	UNLOADEND ROLL WIPER 51W ASSY	MP1A03
			----COMPONENTS----	
A	1	W4 23192	UNLOAD END WLMT-SSPRESS	
B	1	W4 21084	UNLOADEND WLMT 51W BED-SSPRESS	
all	2	04 23204	DRIVE ROLLER ADJ BRKT	
all	3	54STB3264R	REDCR40 B#SF726-40T-B5-G +OIL	
all	4	04 22999	TORQARM MTG ANGLE	
all	5	04 23000	TORQARM-SSPRESS CONV	
all	6	04 22997	TORQUEARM MTG BRKT-SSPRESS	
all	7	15A010A	CARRSCA 3/8-16UNC2X1 SPECIAL	
all	8	15A021S	CARBOLT 3/8-16X1.5 SS18-8	
all	9	15G207	HEXLIGHTLOKNUT 3/8-16 18-8SS N	
all	10	15G201	HXLOKNUT 3/8-16 NYL/SS TYPE NE	
all	11	15K203S	HEXTAPSCR 1/2-13UNC2AX5 SS18-8	
all	12	15G234B	HEXNUT 1/2-13UNC2B BRASS	
all	13	15U285	FLATWASHER 1/2 STD COMM SS18-8	
all	14	15U310	LOKWASHER REGULAR 1/2 SS18-8	
all	15	06 20070	LOCKING WASHER ROLLER SHAFT	
all	16	54AF1437	FLANGE BRG.BROWN#VF3S-123M	
all	17	54JH11437C	SHAFTCOLLAR 1.4375 CFG #23S	
all	18	15U445	FLATWASH 1.453"X2"OD.X.060THK.	
all	19	02 02085	UP WASHER=2"OD=PISTON CUP	
all	20	15K096	HEXCAPSCR 3/8-16UNC2X1SS18-8	
all	21	15U260	LOCKWASHER MEDIUM 3/8 SS18-8	

Pellerin Milnor Corporation
P. O. Box 400, Kenner, LA 70063-0400

Litho in U.S.A.

Parts List—Unload End Drive Assembly

Find the correct assembly first, then find the needed components. The item letters (A, B, C, etc.) assigned to assemblies are referred to in the "Used In" column to identify which components belong to an assembly. The item numbers (1, 2, 3, etc.) assigned to components relate the parts list to the illustration.

Used In	Item	Part Number	Description	Comments
all	22	15K041S	HEXCAPSCR 1/4-20UNC2AX1 SS18-8	
all	23	15G164NE	HEXLOKNUT NYL 1/4-20 UNC2A SS.	
all	24	04 21165	BELT SIDE GUARD-RT	
all	25	04 21165A	BELT SIDE GUARD-LF	
B	26	04 20356	UNLOADEND LEG-SSPRESS CONV+35L	
all	27	W4 20358	FOOTPAD WLMT-UNLOADEND SSPRESS	
all	28	15G250	HXNUT 1-8UNC2B SAE ZNC GR2	
all	29	15U400	LOCKWASHER MEDIUM 1" ZINCPL	
C	30	60B065	RUBBER MNT CTR BONDED 40 DURO	
C	31	04 20796	SLEEVE=TORQUE ARM BUSHING	
C	32	02 18571A	PISTON ROD WASHER-.25"TK	
C	33	15K144C	HEXCAPSCR 7/16-14UNC X 2.5 GR	
C	34	15G222	HXFINJAMNUT 7/16-14UNC2B ZINC	
C	35	15G222C	HEXNUT 7/16-14UNC2B ZINC GR2	
C	36	15U271	LOKWASH INTOOTH 7/16ZN	
C	37	15U312	HARD FWASH 3/4ODX33/64IDX.115	
C	38	15U202	FLATWSHR.50ID1.75OD11GA ZNC	
C	39	15U490	FLTWASH 1+1/2X17/32X1/4 ZINC	
D E	40 40	X4 23224 X4 21090	CONV ROLLER SHAFT-1.44DRIVE DRIVE ROLLER SHAFT-51W BED	
D,E	41	54C006	VGORPXTLAGDRMPULLY#D5S40XT20	
D,E	42	54C006XTB	VGORP XT BUSH 1 15/16 B#XTB20X	
F,G	43	X4 23126	TRACKING ROLLER BUSHING S/S	
F G	44 44	X4 23126A X4 21093	TUBING 2" OD X 42.00 LG 304 SS TUBING 2"OD X 51.00LG 304SS	
F G	45 45	X4 23109 X4 21091	IDLER SHAFT .75DX45.50LG IDLER SHAFT.75DX54.50LG	
F,G	46	54JH10625S	SHFTCOL 5/8X1+5/16X.437 SS C-T	
F,G	47	54J10625S2	SHFCOL 5/8X1+5/16X.437 2PC SS	
F,G	48	54E022	FBRGGTEF3/4X1X1BNT#DRF1216-08	
F,G	49	06 20070	LOCKING WASHER ROLLER SHAFT	
all	50	W4 21162	ROLLER SIDE GUARD WLMT-RT	
all	51	W4 21162A	ROLLER SIDE GUARD WLMT-LF	
all	52	15U310S	FLATWASH-SS .53 X 1.37 .187T	
H J	53 53	04 21118 04 21167	UHMW ROLLER WIPER 42W ROLLER WIPER BRKT-51W	
H J	54 54	04 21119 04 21168	ROLLER WIPER STRAP-42W UHMW ROLLER WIPER 51W	
H J	55 55	04 21120 04 21169	ROLLER WIPER BRKT-42W ROLLER WIPER STRAP-51W	
H,J	56	15K040A	BUTSOKLOKCAPSCR 1/4-20X3/4 188	
H,J	57	15G164NE	HEXLOKNUT NYL 1/4-20 UNC2A SS.	
H,J	58	15A008	CARBOLT 1/4"-20UNC2X1" SS18-8	
H,J	59	15U181	LOCKWASHER MEDIUM 1/4 SS18-8	
H,J	60	15G170	HEXNUT 1/4-20UNC2 SS18-8	
H,J	61	04 20616	CONLO.BELT WASHER	
H,J	62	17A005A	DETENTRING PIN 3/16X 13/16	
.				

Load End Rollers & Belt Tracking

MP1601CL,CR,L,R MP1602CL,CR,L,R MP1603CL,CR,L,R MP1604CL,CR,L,R

Pellerin Milnor Corporation
P. O. Box 400, Kenner, LA 70063-0400

Litho in U.S.A.

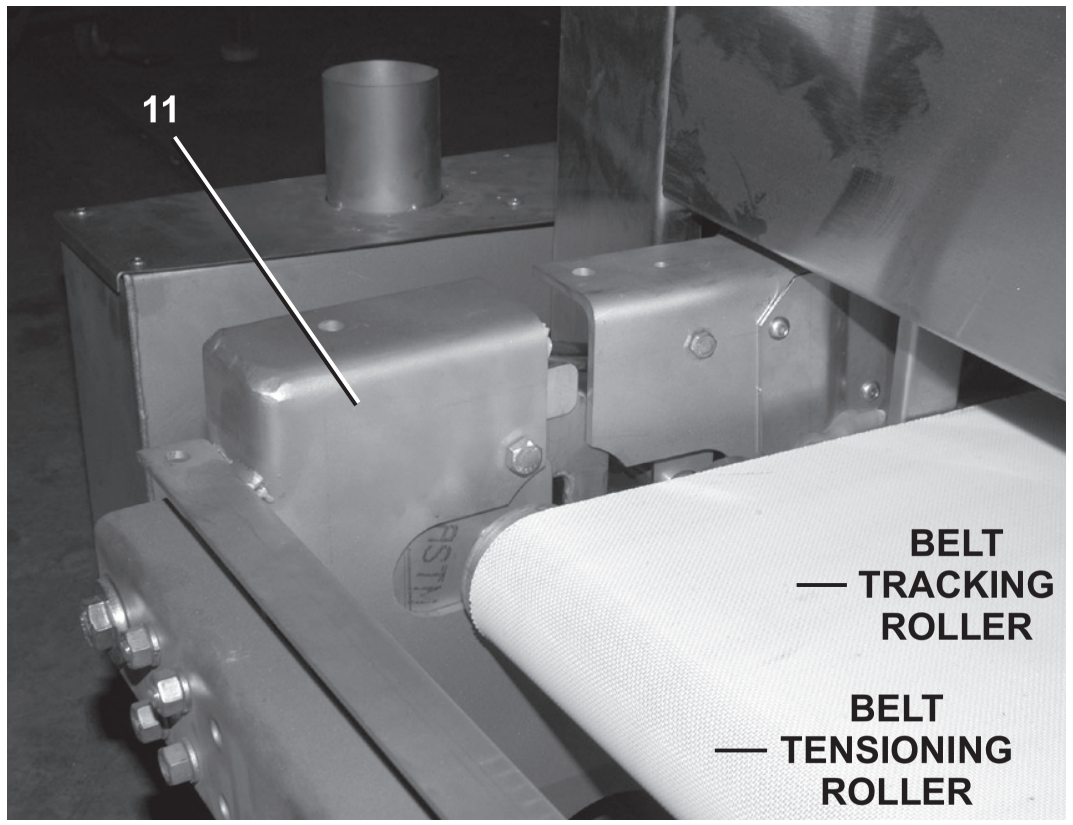

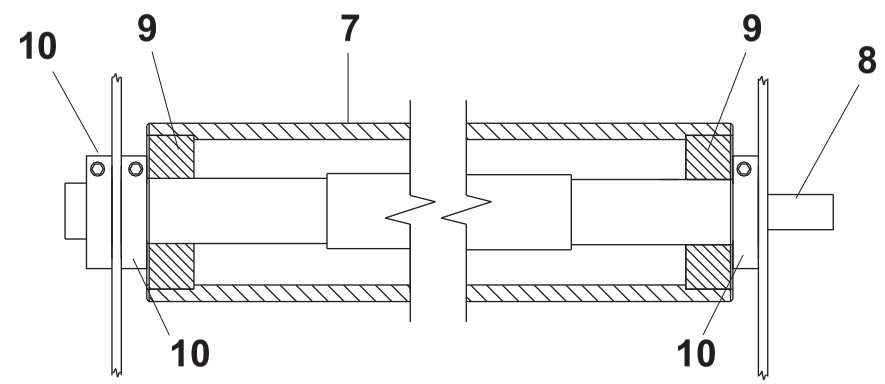

DETAIL A: IDLER (TENSIONING) ROLLER

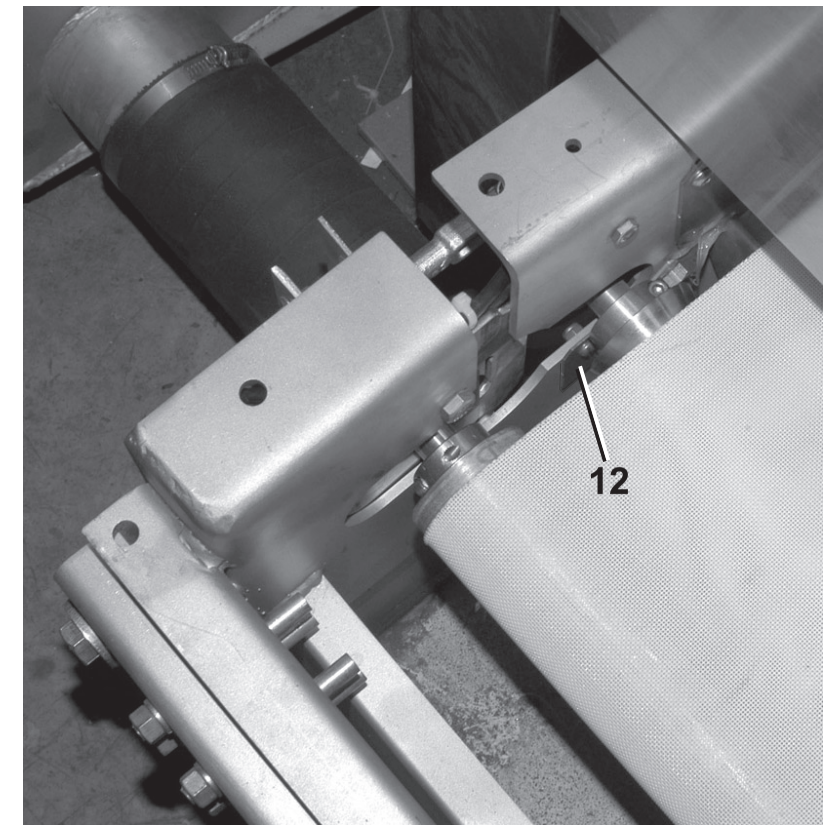

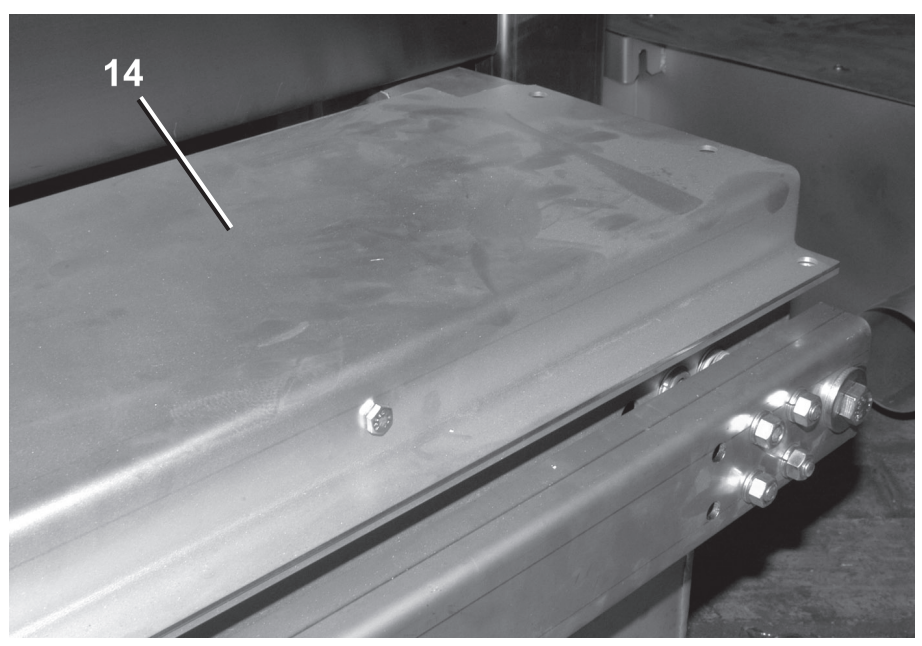

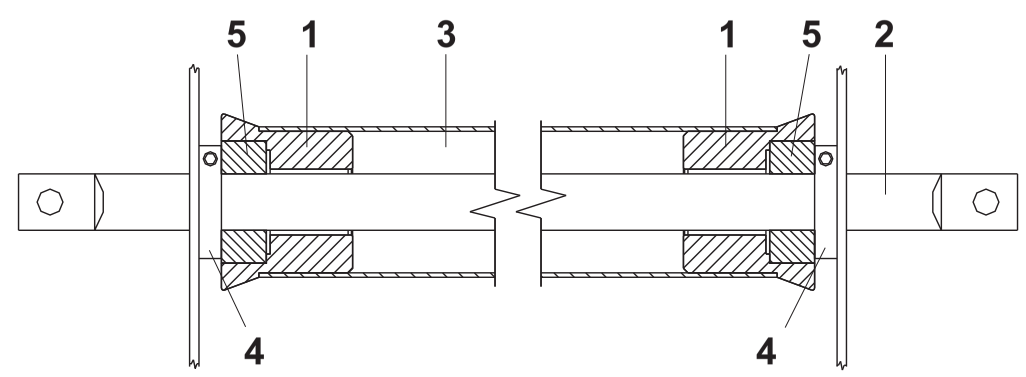

DETAIL B: BELT TRACKING ROLLER

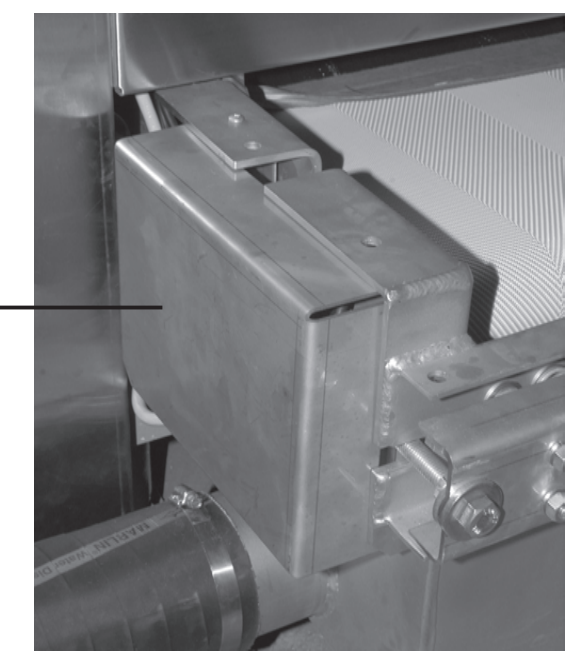

Pellerin Milnor Corporation
P. O. Box 400, Kenner, LA 70063-0400

Litho in U.S.A.

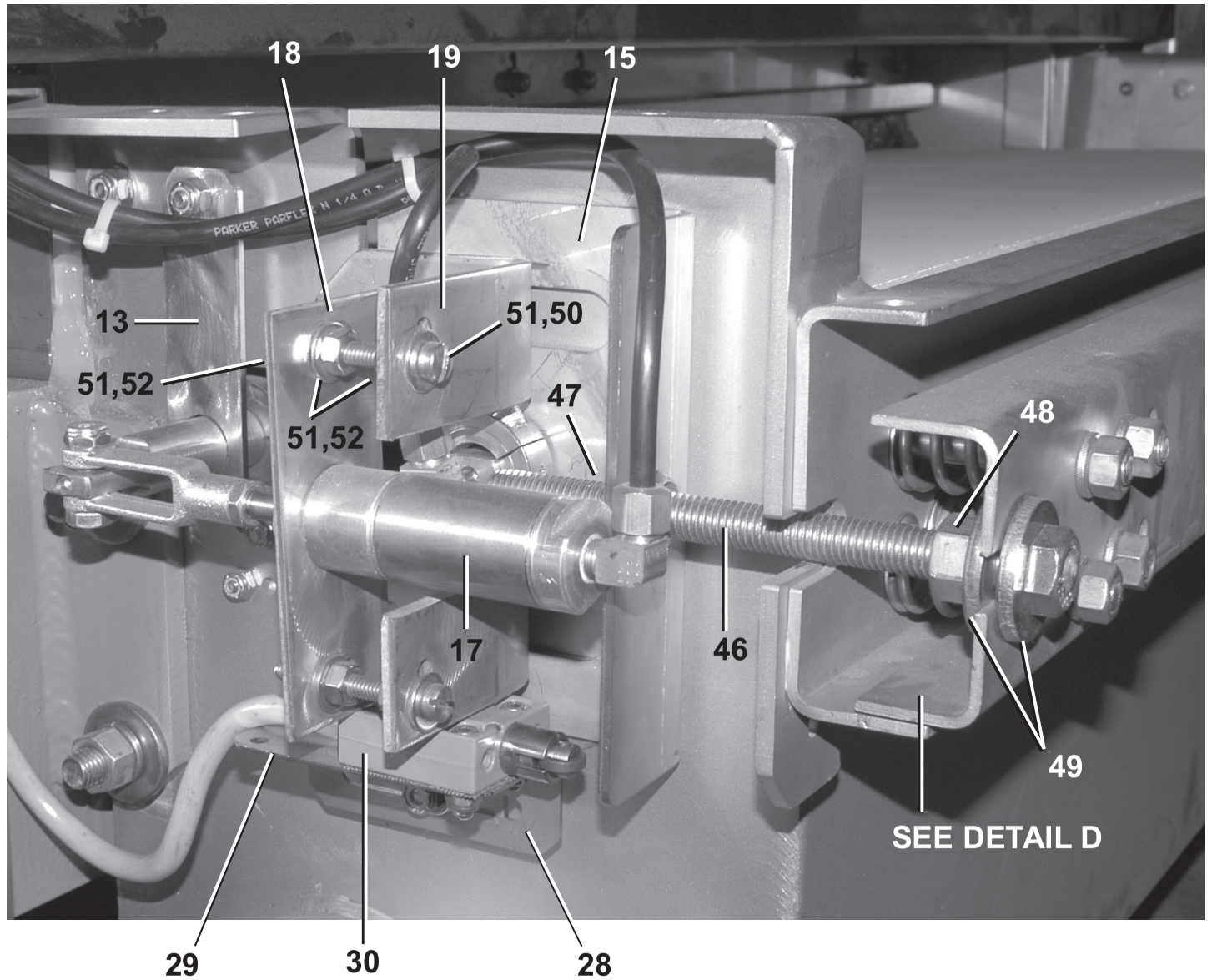

BELT TRACKING ASSEMBLY

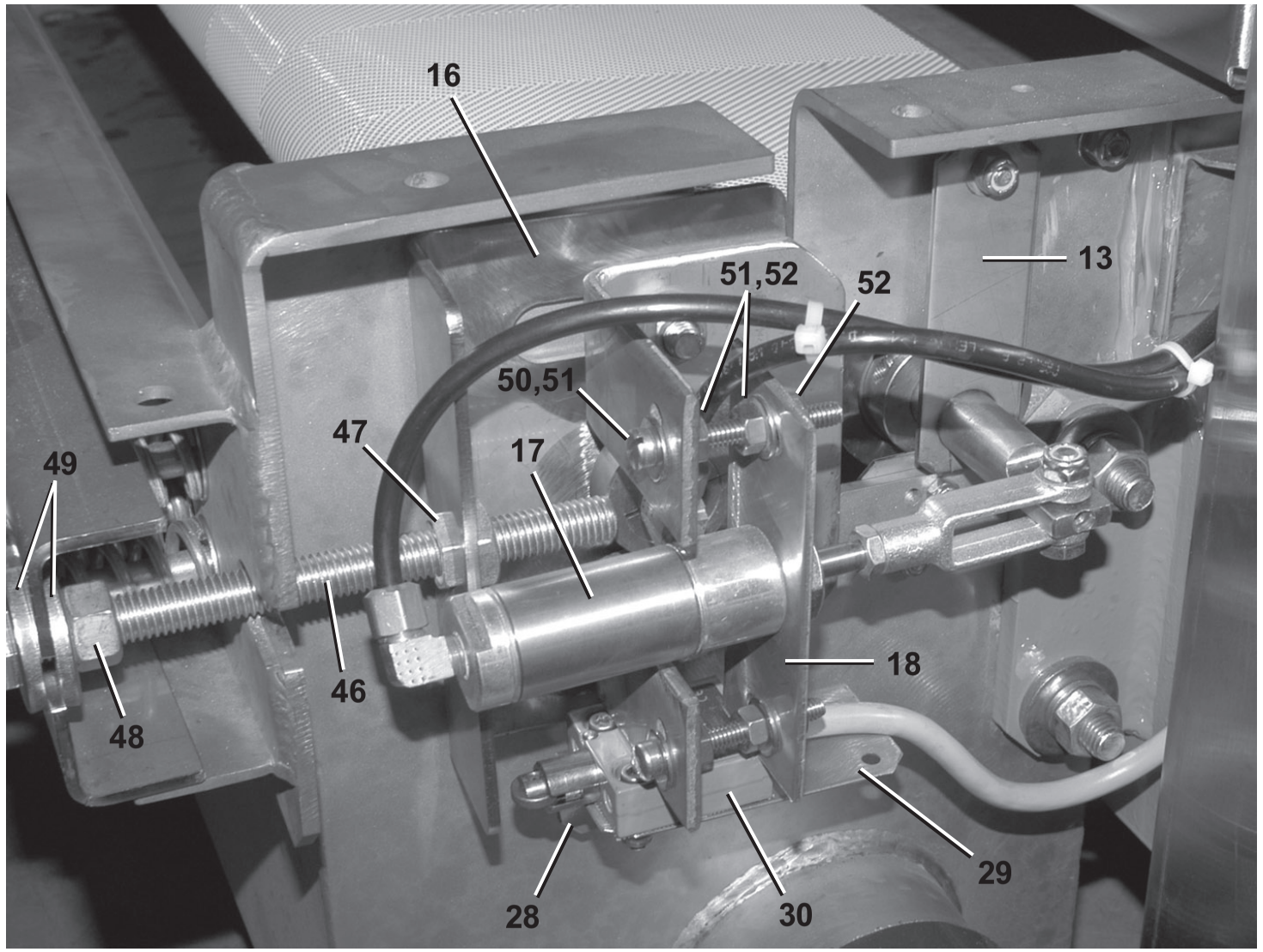

Load End Rollers & Belt Tracking

MP1601CL,CR,L,R MP1602CL,CR,L,R MP1603CL,CR,L,R MP1604CL,CR,L,R

Pellerin Milnor Corporation
P. O. Box 400, Kenner, LA 70063-0400

Litho in U.S.A.

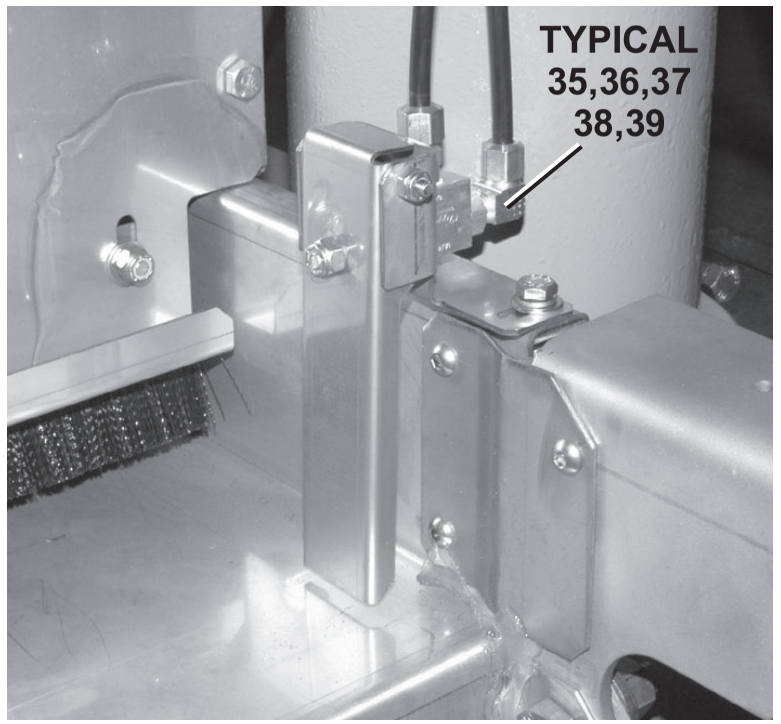

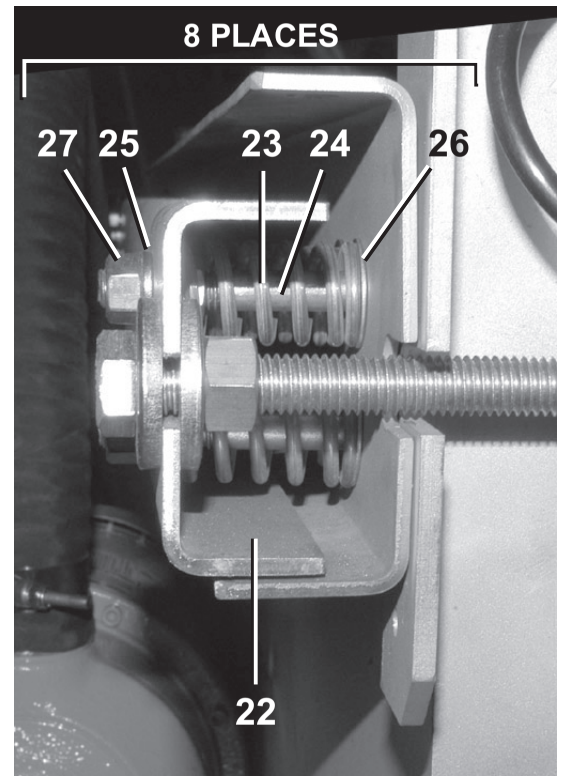

DETAIL D: TENSION BAR

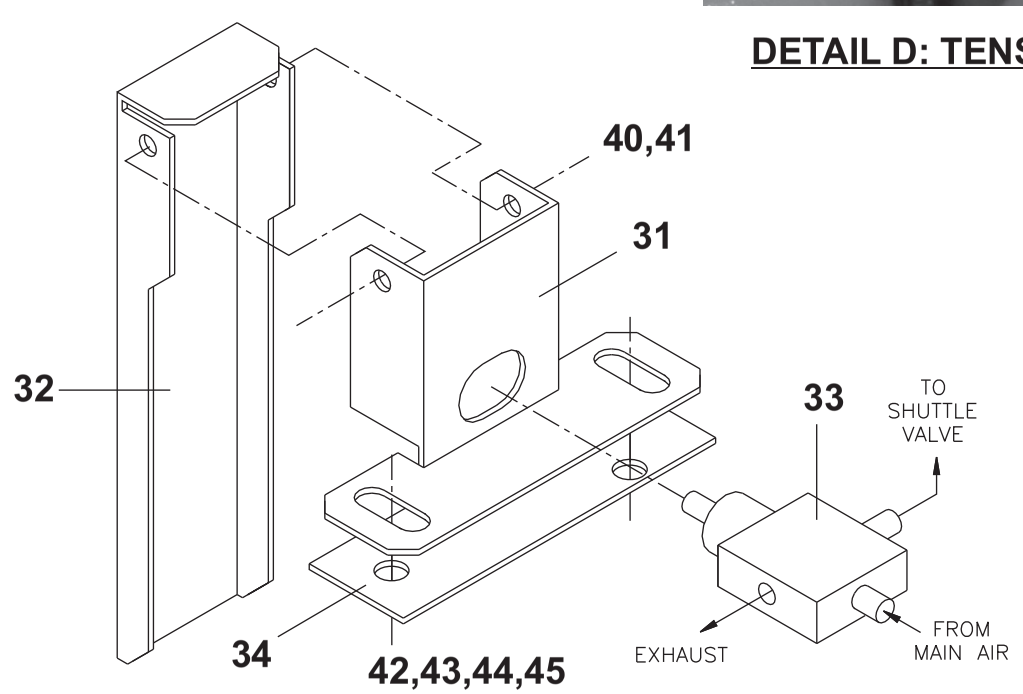

DETAIL C: BELT TRACKING SWITCH

Parts List—Load End Rollers & Belt Tracking

Find the correct assembly first, then find the needed components. The item letters (A, B, C, etc.) assigned to assemblies are referred to in the "Used In" column to identify which components belong to an assembly. The item numbers (1, 2, 3, etc.) assigned to components relate the parts list to the illustration.

Used In	Item	Part Number	Description	Comments
			ASSEMBLIES	
	A	ALC50065	BELT TRACKING ROLLER-SSPRESS	MP1601,2,3,4
	B	ALC50121	BELT TRACKING ROLLER-51W	MP1A03
	C	ALC50060A	TENSION ROLLER 42W SS-BRNG	MP1601,2,3,4
	D	ALC50122	TENSION ROLLER 51W-SS BRNG	MP1A03
	E	ALC420098	LOADEND IDLER ASSEMBLY	MP1601,2,3,4
	F	ALC420125	LOADEND IDLER 51W ASSEMBLY	MP1A03
	G	ALC420100	BELT TRACKING SWITCH ASSY	MP1601,2,3,4 MP1A03
			COMPONENTS	
all	1	X4 23126	TRACKING ROLLER BUSHING S/S	
A	2	X4 23109B	TRACKING SHAFT .75DX50.25LG	
B	2	X4 21092	TRACKING SHAFT .75DX59.25LG	
A	3	X4 23126A	TUBING 2" OD X 42.00 LG 304 SS	
B	3	X4 21093	TUBING 2"OD X 51.00LG 304SS	
all	4	54JH10750S	SHFTCOL 3/4X1+1/2X.5 SS C-T	
all	5	54AB75001	BALBRG.75X1.625X.437#SSR122RS	
C	7	X4 21094	TENSION ROLLER 2.38DX51.75LG	
D	7	X4 23433	TENSION ROLLER 2.50D-ER14 BRNG	
D	8	X4 23434	TENSION ROLLER SHAFT-ER14 BRNG	
C	8	X4 21095	TENSION ROLL SHAFT 1"0DX55"LG	
all	9	54AB25001	BALBRG 25X52X15MM-#SS62052RSC3	
all	10	54JH10750S	SHFTCOL 3/4X1+1/2X.5 SS C-T	
E	11	W4 23198	LOAD END WLMT-SSPRESS	
F	11	W4 21087	LOADEND PAN WLMT-51W BED	
all	12	04 23205A	TRACKING ROLLER END PLATE	
all	13	04 23205B	TRACK ROLLER SUPPORT PLATE	
E	14	04 23203	LOADEND CROSS BRACE	
F	14	04 21088	LOADEND CROSS BRACE-51W BED	
all	15	04 20568	TENSION ROLLER ADJ BRKT-LF	
all	16	04 20568A	TENSION ROLLER ADJ BRKT-RT	
all	17	27C211	AIRCYL1+1/16BOREX1/2"STK DBL	
all	18	04 23214	BELT TRACKING CYL MTG BRKT	
all	19	04 23215	BELT TRACKING BRKT	
all	20	04 23232	BELT TRACKING COVER-RT	
all	21	04 23232A	BELT TRACKING COVER-LEFT	
E	22	04 20570	BELT TENSIONING BAR	
F	22	04 21089	BELT TENSION BAR-51W BED	
all	23	02 18187S	SPRING=DOOR STAINLESS STEEL	
all	24	04 20571	STUD 3/8-16UN X 3.25LG	

Pellerin Milnor Corporation
P. O. Box 400, Kenner, LA 70063-0400

Litho in U.S.A.

Parts List—Load End Rollers & Belt Tracking

Find the correct assembly first, then find the needed components. The item letters (A, B, C, etc.) assigned to assemblies are referred to in the "Used In" column to identify which components belong to an assembly. The item numbers (1, 2, 3, etc.) assigned to components relate the parts list to the illustration.

Used In	Item	Part Number	Description	Comments
all	25	15U260	LOCKWASHER MEDIUM 3/8 SS18-8	
all	26	15U245	FLTWASH 3/8 STD COMM 18-8 SS	
all	27	15G206B	HEXNUT 3/8-16UNC2 BRASS	
all	28	04 20590	LOADCHUTE ADAPTER BACK	
all	29	04 20597	BELT STOP SW MTG PLATE	
all	30	09RM01212G	CAPSW 12FT 180DEG ROLLER GOLD	
all	31	04 23217	BELT TRACKING SWITCH BRKT	
all	32	04 23219	BELT TRACKING ACTUATOR	
all	33	96N005	3WAY AIROP CONT.VLV.CLIPP#MJV3	
all	34	X4 23218	BELT TRACKING TAP STRIP	
all	35	53A031B	BODY-EL90MALE.25X1/8 #269C-42B	
all	36	53A059A	NUT 1/4"BR.HOLYOKE AND #61A-4	
all	37	53A500	SLEEVE DELRIN 1/4"OD#60PT-4	
all	38	53A501	TUBE INSERT .163"OD #63PT-4-40	
all	39	60E004TE	1/4"OD X.170"ID NYL(BLK)TUBING	
all	40	15N154A	PHILPSHDMACHSCR 10-24 X2" 18-8	
all	41	15G126	HXLOCKNUT NYLON 10-24 UNC SS N	
all	42	15N174	HXCAPSCR 1/4-20UNC2X5/8SS18-8	
all	43	15U181	LOCKWASHER MEDIUM 1/4 SS18-8	
all	44	15U188	FLTWASH 1/4 STD COMM SS18-8	
all	45	15G170	HEXNUT 1/4-20UNC2 SS18-8	
all	46	15K203S	HEXTAPSCR 1/2-13UNC2AX5 SS18-8	
all	47	17N079	CLINCH NUT 1/2-13 STL/ZNC	
all	48	15G234B	HEXNUT 1/2-13UNC2B BRASS	
all	49	15U310S	FLATWASH-SS .53 X 1.37 .187T	
all	50	15N200	FILMACSCR 1/4-20UNCX2 SS18-8 S	
all	51	15U188	FLTWASH 1/4 STD COMM SS18-8	
all	52	15G170	HEXNUT 1/4-20UNC2 SS18-8	

.