Published Manual Number/ECN: MAPMPX40BE/2025336A
- **Publishing System: TPAS2**
- **Access date: 09/02/2025**
- **Document ECNs: NOT latest**

Mechanical Parts

MP1540CL, CR, L, R (MP1640CL, CR, L, R Legacy)

Read the separate safety manual before installing, operating, or servicing

PELLERIN MILNOR CORPORATION POST OFFICE BOX 400, KENNER, LOUISIANA 70063-0400, U.S.A.

Table of Contents
MAPMPX40BE/25336A

Table of Contents, continued
MAPMPX40BE/25336A

PELLERIN MILNOR CORPORATION
LIMITED STANDARD WARRANTY

We warrant to the original purchaser that MILNOR machines including electronic hardware/software (hereafter referred to as "equipment"), will be free from defects in material and workmanship for a period of one year from the date of shipment (unless the time period is specifically extended for certain parts pursuant to a specific MILNOR published extended warranty) from our factory with no operating hour limitation. This warranty is contingent upon the equipment being installed, operated and serviced as specified in the operating manual supplied with the equipment, and operated under normal conditions by competent operators.

Providing we receive written notification of a warranted defect within 30 days of its discovery, we will—at our option—repair or replace the defective part or parts, EX Factory (labor and freight specifically NOT included). We retain the right to require inspection of the parts claimed defective in our factory prior to repairing or replacing same. We will not be responsible, or in any way liable, for unauthorized repairs or service to our equipment, and this warranty shall be void if the equipment is tampered with, modified, or abused, used for purposes not intended in the design and construction of the machine, or is repaired or altered in any way without MILNOR's written consent.

Parts damaged by exposure to weather, to aggressive water, or to chemical attack are not covered by this warranty. For parts which require routine replacement due to normal wear—such as gaskets, contact points, brake and clutch linings, belts, hoses, and similar parts—the warranty time period is 90 days.

We reserve the right to make changes in the design and/or construction of our equipment (including purchased components) without obligation to change any equipment previously supplied.

ANY SALE OR FURNISHING OF ANY EQUIPMENT BY MILNOR IS MADE ONLY UPON THE EXPRESS UNDERSTANDING THAT MILNOR MAKES NO EXPRESSED OR IMPLIED WARRANTIES OF MERCHANTABILITY OR FITNESS FOR ANY PARTICULAR USE OR PURPOSE OR ANY OTHER WARRANTY IMPLIED BY LAW INCLUDING BUT NOT LIMITED TO REDHIBITION. MILNOR WILL NOT BE RESPONSIBLE FOR ANY COSTS OR DAMAGES ACTUALLY INCURRED OR REQUIRED AS A RESULT OF: THE FAILURE OF ANY OTHER PERSON OR ENTITY TO PERFORM ITS RESPONSIBILITIES, FIRE OR OTHER HAZARD, ACCIDENT, IMPROPER STORAGE, MIS-USE, NEGLECT, POWER OR ENVIRONMENTAL CONTROL MALFUNCTIONS, DAMAGE FROM LIQUIDS, OR ANY OTHER CAUSE BEYOND THE NORMAL RANGE OF USE. REGARDLESS OF HOW CAUSED, IN NO EVENT SHALL MILNOR BE LIABLE FOR SPECIAL, INDIRECT, PUNITIVE, LIQUIDATED, OR CONSEQUENTIAL COSTS OR DAMAGES, OR ANY COSTS OR DAMAGES WHATSOEVER WHICH EXCEED THE PRICE PAID TO MILNOR FOR THE EQUIPMENT IT SELLS OR FURNISHES.

THE PROVISIONS ON THIS PAGE REPRESENT THE ONLY WARRANTY FROM MILNOR AND NO OTHER WARRANTY OR CONDITIONS, STATUTORY OR OTHERWISE, SHALL BE IMPLIED.

WE NEITHER ASSUME, NOR AUTHORIZE ANY EMPLOYEE OR OTHER PERSON TO ASSUME FOR US, ANY OTHER RESPONSIBILITY AND/OR LIABILITY IN CONNECTION WITH THE SALE OR FURNISHING OF OUR EQUIPMENT TO ANY BUYER.

BMP720097/19036

BIUUUD19 (Published) Book specs- Dates: 20081231 / 20081231 / 20081231 Lang: ENG01 Applic: UUU

How to Get the Necessary Repair Components

This document uses Simplified Technical English.
Learn more at http://www.asd-ste100.org.

You can get components to repair your machine from the approved supplier where you got this machine. Your supplier will usually have the necessary components in stock. You can also get components from the Milnor® factory.

Tell the supplier the machine model and serial number and this data for each necessary component:

- The component number from this manual
- The component name if known
- The necessary quantity
- The necessary transportation requirements
- If the component is an electrical component, give the schematic number if known.
- If the component is a motor or an electrical control, give the nameplate data from the used component.

To write to the Milnor factory:

Pellerin Milnor Corporation
Post Office Box 400
Kenner, LA 70063-0400
UNITED STATES

Telephone: 504-467-2787
Fax: 504-469-9777
Email: parts@milnor.com

— End of BIUUUD19 —

Trademarks

BNUUUU02.R01 0000158093 F.2 E.2 3/3/21 9:47 AM Released

These words are trademarks of Pellerin Milnor® Corporation and other entities:

Table 1. Trademarks

AutoSpot™	GreenFlex™	MilMetrix®	PulseFlow®
CBW®	GearTrace™	MilTouch™	RAM Command™
Drynet™	GreenTurn™	MilTouch-EX™	RecircONE®
E-P Express®	Hydro-cushion™	MILRAIL™	RinSave®
E-P OneTouch®	Mentor®	Miltrac™	SmoothCoil™
E-P Plus®	Mildata®	PBW™	Staph Guard®
Gear Guardian®	Milnor®		

End of document: BNUUUU02

BIUUUI02PP (Published) Book specs- Dates: 20170824 / 20170824 / 20170824 Lang: ENG01 Applic: PPM

Tag Guidelines for the Models Listed Below

MP1540CL	MP1540CR	MP1540L-	MP1540R-	MP1550CL	MP1550CR	MP1550L-
MP1550R-	MP1556CL	MP1556CR	MP1556L-	MP1556R-	MP1601CL	MP1601CR
MP1601LF	MP1601R-	MP1601RT	MP1602CL	MP1602CR	MP1602LF	MP1602RT
MP1603CL	MP1603CR	MP1603L-	MP1603R-	MP1604CL	MP1604CR	MP1604L-
MP1604R-	MP1640CL	MP1640CR	MP1640L-	MP1640R-	MP1656CL	MP1656CR
MP1656L-	MP1656R-	MP1A03CL	MP1A03CR	MP1A03L-	MP1A03R-	MP1A50CL
MP1A50CR	MP1A50L-	MP1A50R-	MP1A56CL	MP1A56CR	MP1A56L-	MP1A56R-

Notice 1: This information may apply to models in addition to those listed above. It applies to paper tags. It does not apply to the vinyl or metal safety placards, which must remain permanently affixed to the machine and replaced if no longer readable.

Paper tags on the machine provide installation guidelines and precautions. The tags can be tie-on or adhesive. You can remove tie-on tags and white, adhesive tags after installation. Yellow adhesive tags must remain on the machine.

The following entries explain the installation tags. Each entry includes: 1) the tag illustration, 2) the tag part number displayed st the bottom of the tag, and 3) the meaning of the tag.

Display or Action	Explanation
	Read the manuals before proceeding. This symbol appears on most tags. The machine ships with safety, operator, and routine maintenance guides for customer use. Milnor dealer manuals for installing, servicing, and commissioning this machine are also available from the Milnor Parts department.
	B2TAG88005: This carefully built product was tested and inspected to meet Milnor® performance and quality standards by (identification mark of tester).
	B2TAG94078: Do not forklift here; do not jack here; do not step here—whichever applies.
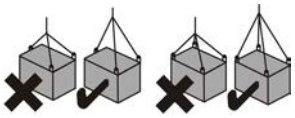	B2TAG94079: Rig for crane lifting (either 3-point or 4-point, depending on the number of lifting eyes provided) using a steep angle on the chains (closer to vertical than horizontal).
	B2TAG94081: Motor must rotate in this direction. On single motor washer-extractors and centrifugal extractors, the drive motor must turn in this direction during draining and extraction. This tag is usually wrapped around a motor housing. If the motor turns in the opposite direction when the machine is first tested, the electrical hookup is incorrect and must be reversed as explained in the schematic manual.
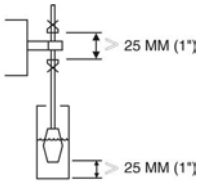	B2TAG94082: Maintain a 25 millimeter (1") minimum clearance between level float clips. Set low level so that the bottom of the float is always at least 25 millimeters (1") above the bottom of the float tube.
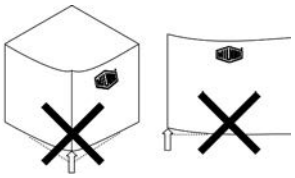	B2TAG94084: Do not lift from one corner of the machine, as this can cause the frame to rack, damaging it.

Display or Action	Explanation
	B2TAG94102 shown—others similar: Match up the components with this number. These tags are used to pair up electrical or hose connections between major components of a machine shipped dis-assembled.
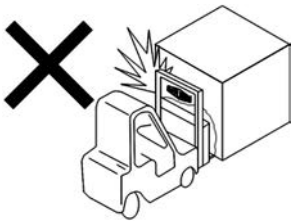	B2TAG94118: Do not strike shipping container during fork-lifting. Fragile components inside.
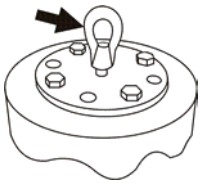	B2TAG98037: Read the installation instructions. Do not attempt to lift the machine with this component. Do not remove this component unless the ram cylinder is mounted to the top plate, the ram is raised fully **and the platen safety bars are installed**. Use this component to raise the ram cylinder for mounting, during installation.
35 - 40 psi 241316 - 275790 Pa (N/m²) 	B2TAG98039: Verify that discharge door pressure is within the range shown.
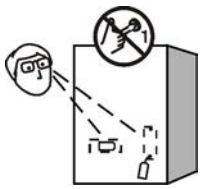	B2T2001028: Look for tags inside the machine. These tags may identify shipping restraints to be removed or components to be installed. Do not start the machine until these actions are completed.
 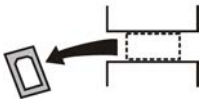	B2T2002013: Do not start the machine until shipping restraints are removed. This tag will appear on the outside of the machine to alert you to the presence of internal shipping restraints. A tag will also appear on the restraint to help identify it. Most, but not all shipping restraints display the color red. Some shipping restraints are also safety stands. Do not discard these.

Display or Action	Explanation
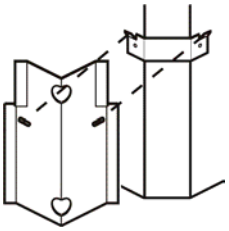	B2T2002016: Store safety stands as shown when not in use.
	B2T2003014: Make sure that you use the specified hydraulic oil.
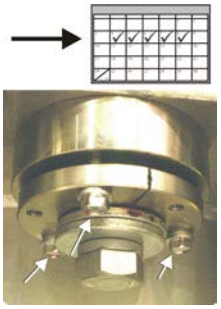	B2T2004028: Read the service instructions. Retighten the can bushing bolts to the torque shown after each of the first five days of operation following installation.
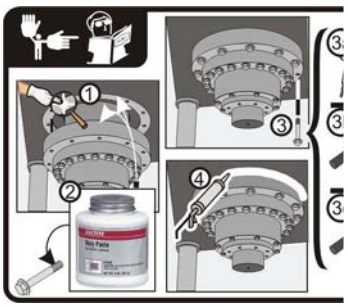	B2T2007017: Read the installation instructions. When mounting the ram, use LocTite moly paste on mounting surfaces. Torque the bolts three times as shown.
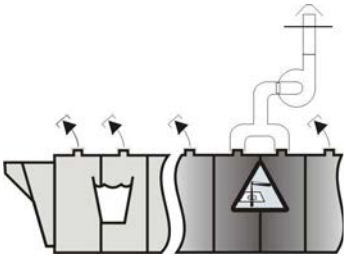	B2T2008001: Read the installation instructions. Remove temporary vent covers. Install a powered vent unit on the oxidation zone modules and a separate powered vent unit on the finish zone module and adjacent press, if there is one.
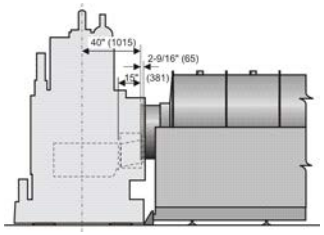	B2T2008006: When installing a G3 CBW tunnel washer behind a 1-stage press, maintain the dimensions shown.

Display or Action	Explanation
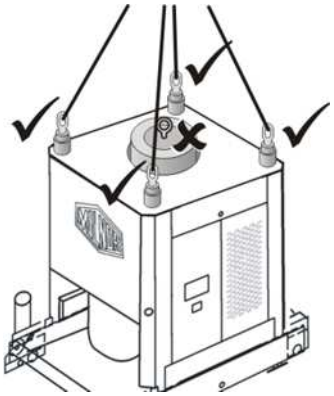	B2T2009017: Lift the press frame from the eye bolts on the four columns. Never attempt to lift the press from the eye bolt on top of the ram cylinder. This eye bolt is used to raise the ram into position.
	B2T2010023: Set the press frame in accordance with this instruction and the installation manual.
	B2T2011015: Attach hydraulic components as explained. This procedure is critical.
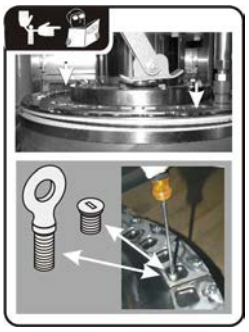	B2T2012012: When you remove the safety bar eye bolts for automatic operation, install the O-ring plugs fully in the two threaded holes.
	B2T2016041: Find pressure gauge instructions here.

Display or Action	Explanation
	B2T2017010: All hydraulic oil added to the 1-station press must be passed through a 10 micron filter.

— End of BIUUUI02 —

Safety Placard Use and Placement

Mp15xx, MP16xx, MPL5xx, MPL6xx, MP1Axx

Pellerin Milnor Corporation
P. O. Box 400, Kenner, LA 70063-0400

Litho in U.S.A.

Notes:
1. **Replace placard immediately, if removed or unreadable.**
2. **Approximate locations of placards are shown. Mounting holes are provided on machine. If aluminum placard use #8 self-tapping screws.**

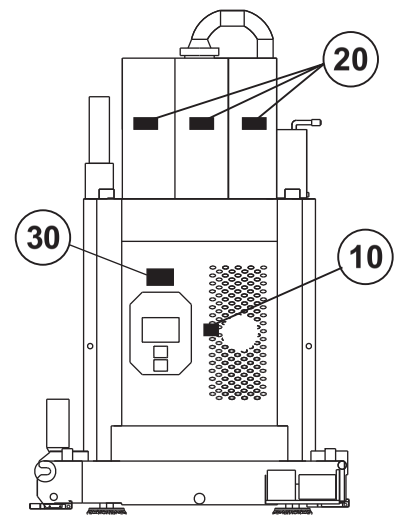

REAR VIEW

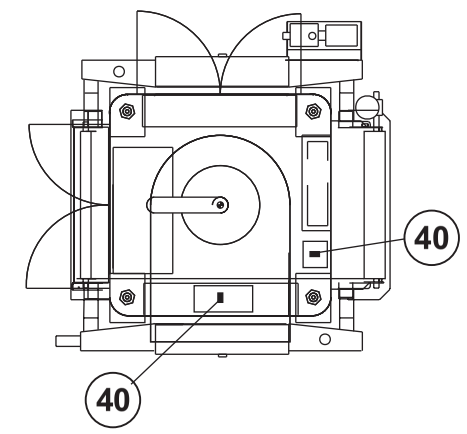

PLAN VIEW

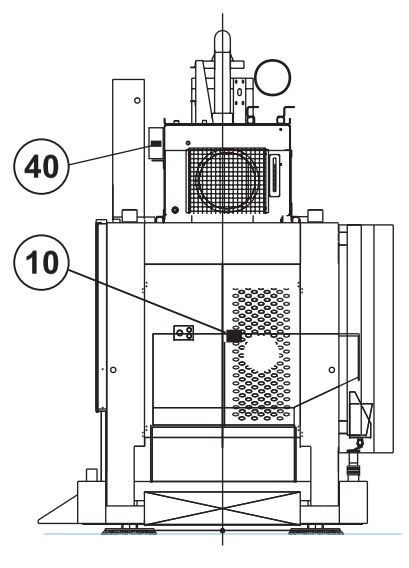

LEFT VIEW

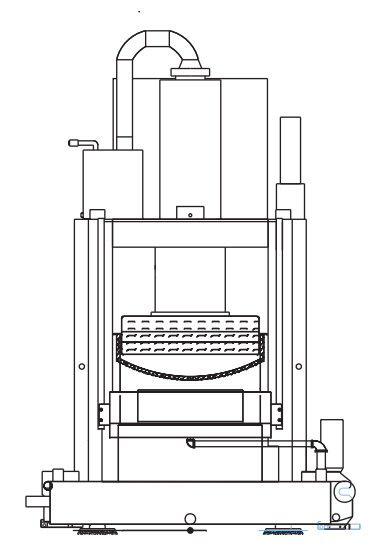

FRONT VIEW

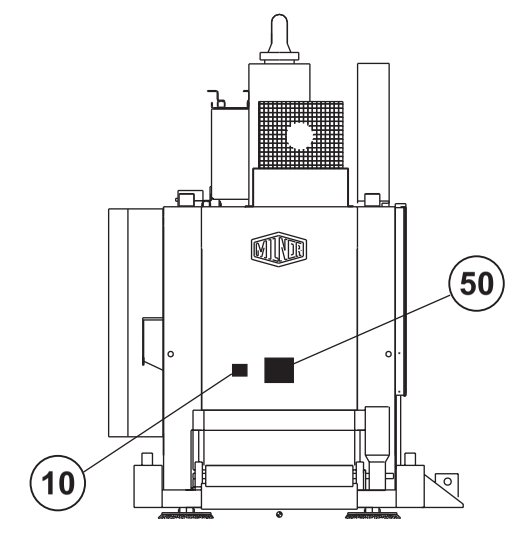

RIGHT VIEW

Safety Placard Use and Placement

Mp15xx, MP16xx, MPL5xx, MPL6xx, MP1Axx

BMP040036/2020275B
(Sheet 2 of 2)

Pellerin Milnor Corporation
P. O. Box 400, Kenner, LA 70063-0400

Litho in U.S.A.

Parts List—Safety Placard Placement

Find the correct assembly first, then find the needed components. The item letters (A, B, C, etc.) assigned to assemblies are referred to in the "Used In" column to identify which components belong to an assembly. The item numbers (1, 2, 3, etc.) assigned to components relate the parts list to the illustration.

Used In	Item	Part Number	Description	Comments
			----------COMPONENTS----------	
all	10	01 10668A	NPLT:PRESS DOOR HAZARD-TCATA	
all	20	01 10377A	NPLT:ELEC HAZARD LG-TCATA	
all	30	01 10699A	NPLT:SERV HZRD-PLYEST-TCATA	
all	40	01 10375B	NPLT:ELEC HAZARD SMALL-TCATA	
all	50	01 10634A	NPLT:CONVEYOR HAZARDS-TCATA	

Safety Placard Use and Placement ISO

MP15xx, MP16xx, MPL5xx, MPL6xx, MP1Axx

Pellerin Milnor Corporation
P. O. Box 400, Kenner, LA 70063-0400

Litho in U.S.A.

ISO Placards shown on this page

Notes:

1. **Replace placard immediately, if removed or unreadable.**
2. **Approximate locations of placards are shown. Mounting holes are provided on machine. If aluminum placard use #8 self-tapping screws.**

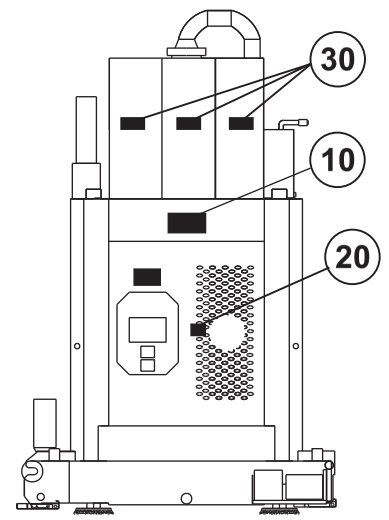

REAR VIEW

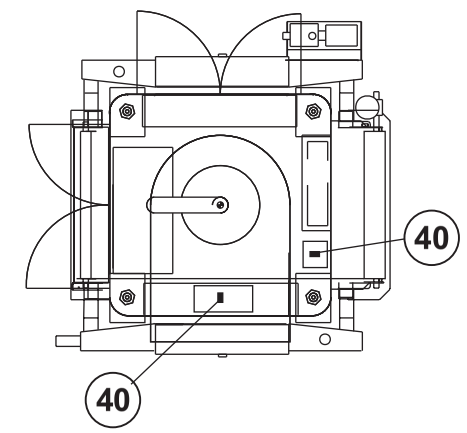

PLAN VIEW

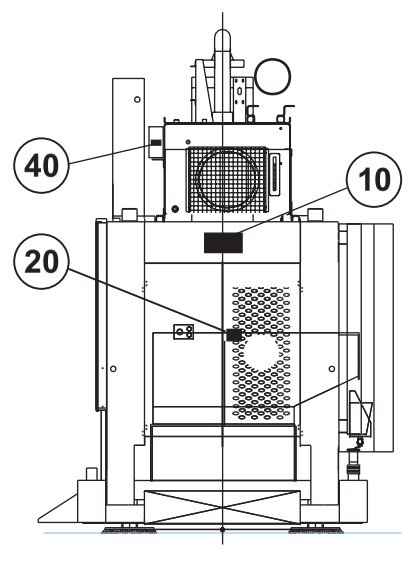

LEFT VIEW

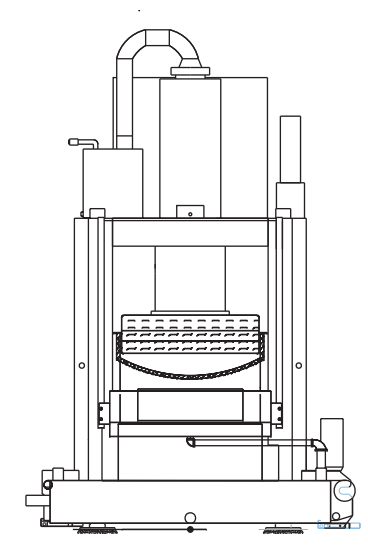

FRONT VIEW

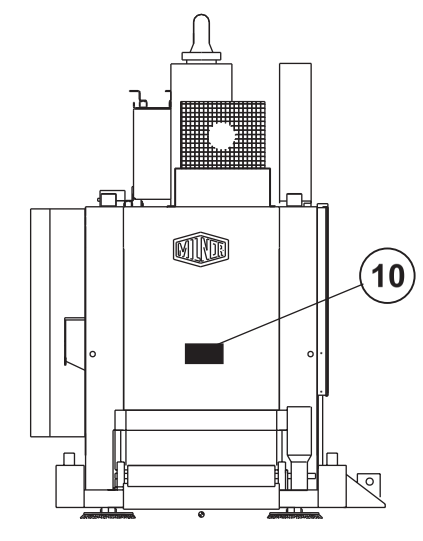

RIGHT VIEW

Safety Placard Use and Placement ISO

BMP040037/2020275B
(Sheet 2 of 2)

Pellerin Milnor Corporation
P. O. Box 400, Kenner, LA 70063-0400

Litho in U.S.A.

Parts List—Safety Placard Placement

Find the correct assembly first, then find the needed components. The item letters (A, B, C, etc.) assigned to assemblies are referred to in the "Used In" column to identify which components belong to an assembly. The item numbers (1, 2, 3, etc.) assigned to components relate the parts list to the illustration.

Used In	Item	Part Number	Description	Comments
			----------COMPONENTS----------	
all	10	01 10668X	NPLT:S.S.PRESS WARNINGS-ISO	
all	20	01 10577X	NPLT:PRESS WRNG CRUSHING-ISO	
all	30	01 10377	NPLTE:"WARNING" 4X4	
all	40	01 10375	NPLTE:"WARNING" 2X2	

BIUUUM04 (Published) Book specs- Dates: 20180109 / 20180109 / 20180109 Lang: ENG01 Applic: UUU

Torque Requirements for Fasteners

This document uses Simplified Technical English. Learn more at http://www.asd-ste100.org.

The document about the assembly gives the torque requirements for other fasteners. **If fastener torque specifications or threadlocker requirements in an assembly document are different from this document, use the assembly document.**

Figure 1: The Bolts in Milnor® Equipment

The Marks on Bolt Heads

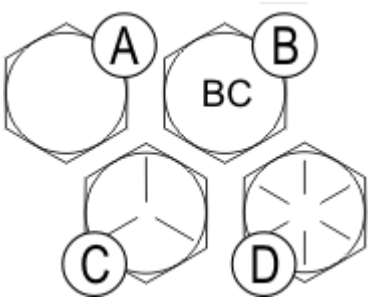

Legend

A. SAE Grades 1 and 2, ASTM A307, and stainless steel
B. Grade BC, ASTM A354
C. SAE Grade 5, ASTM A449
D. SAE Grade 8 and ASTM A354 BD

1. Torque Values

These tables give the standard dimension, grade, threadlocker, and torque requirements for fasteners frequently used on Milnor® equipment.

Note 1: Data from the Pellerin Milnor® Corporation "Bolt Torque Specification" (bolt_torque_milnor.xls/2002096).

1.1. Fasteners Made of Carbon Steel

1.1.1. Without a Threadlocker

Table 1: Torque Values for Standard Fasteners with Maximum 5/16-inch Diameters and No Lubricant

	The Grade of the Bolt							
	Grade 2		Grade 5		Grade 8		Grade BC	
Dimension	**Pound-Inches**	**N-m**	**Pound-Inches**	**N-m**	**Pound-Inches**	**N-m**	**Pound-Inches**	**N-m**
1/4 x 20	66	7	101	11	143	16	126	14
1/4 x 28	76	9	116	13	163	18	--	--
5/16 x 18	136	15	209	24	295	33	258	29
5/16 x 24	150	17	232	26	325	37	--	--

Table 2: Torque Values for Standard Fasteners Larger Than 5/16-inch Diameters and No Lubricant

	The Grade of the Bolt							
	Grade 2		Grade 5		Grade 8		Grade BC	
Dimension	Pound-feet	N-m	Pound-feet	N-m	Pound-feet	N-m	Pound-feet	N-m
3/8 x 16	20	27	31	42	44	59	38	52
3/8 x 24	23	31	35	47	50	68	--	--
7/16 x 14	32	43	49	66	70	95	61	83
7/16 x 20	36	49	55	75	78	105	--	--
1/2 x 13	49	66	75	102	107	145	93	126
1/2 x 20	55	75	85	115	120	163	--	--
9/16 x 12	70	95	109	148	154	209	134	182
9/16 x 18	78	106	121	164	171	232	--	--
5/8 x 11	97	131	150	203	212	287	186	252
5/8 x 18	110	149	170	231	240	325	--	--
3/4 x 10	172	233	266	361	376	510	329	446
3/14 x 16	192	261	297	403	420	569	--	--
7/8 x 9	167	226	429	582	606	821	531	719
7/8 x 14	184	249	473	641	668	906	--	--
1 x 8	250	339	644	873	909	1232	796	1079
1 x 12	274	371	704	954	994	1348	--	--
1 x 14	281	381	723	980	1020	1383	--	--
1 1/8 x 7	354	480	794	1077	1287	1745	1126	1527
1 1/8 x 12	397	538	891	1208	1444	1958	--	--
1 1/4 x 7	500	678	1120	1519	1817	2464	1590	2155
1 1/4 x 12	553	750	1241	1682	2012	2728	--	--
1 3/8 x 6	655	888	1469	1992	2382	3230	2085	2827
1 3/8 x 12	746	1011	1672	2267	2712	3677	--	--
1 1/2 x 6	869	1178	1949	2642	3161	4286	2767	3751
1 1/2 x 12	979	1327	2194	2974	3557	4822	--	--

Table 3: Torque Values for Plated Fasteners with Maximum 5/16-inch Diameters and No Lubricant

	The Grade of the Bolt							
	Grade 2		Grade 5		Grade 8		Grade BC	
Dimension	Pound-Inches	N-m	Pound-Inches	N-m	Pound-Inches	N-m	Pound-Inches	N-m
1/4 x 20	49	6	76	9	107	12	95	11
1/4 x 28	56	6	88	10	122	14	--	--
5/16 x 18	102	12	156	18	222	25	193	22
5/16 x 24	113	13	174	20	245	28	--	--

Table 4: Torque Values for Plated Fasteners Larger Than 5/16-inch Diameters and No Lubricant

	The Grade of the Bolt							
	Grade 2		Grade 5		Grade 8		Grade BC	
Dimension	Pound-feet	N-m	Pound-feet	N-m	Pound-feet	N-m	Pound-feet	N-m
3/8 x 16	15	20	23	31	33	44	29	38
3/8 x 24	17	23	26	35	37	49	--	--
7/16 x 14	24	32	37	50	52	71	46	61
7/16 x 20	27	36	41	55	58	78	--	--
1/2 x 13	37	49	56	76	80	106	70	93
1/2 x 20	41	55	64	85	90	120	--	--
9/16 x 12	53	70	81	110	115	153	101	134
9/16 x 18	59	79	91	122	128	174	--	--
5/8 x 11	73	97	113	150	159	212	139	186
5/8 x 18	83	110	127	172	180	240	--	--
3/4 x 10	129	173	200	266	282	376	246	329
3/14 x 16	144	192	223	297	315	420	--	--
7/8 x 9	125	166	322	430	455	606	398	531
7/8 x 14	138	184	355	474	501	668	--	--
1 x 8	188	250	483	644	682	909	597	796
1 x 12	205	274	528	716	746	995	--	--
1 x 14	210	280	542	735	765	1037	--	--
1 1/8 x 7	266	354	595	807	966	1288	845	1126
1 1/8 x 12	298	404	668	890	1083	1444	--	--
1 1/4 x 7	375	500	840	1120	1363	1817	1192	1590
1 1/4 x 12	415	553	930	1261	1509	2013	--	--
1 3/8 x 6	491	655	1102	1470	1787	2382	1564	2085
1 3/8 x 12	559	758	1254	1672	2034	2712	--	--
1 1/2 x 6	652	870	1462	1982	2371	3161	2075	2767
1 1/2 x 12	733	994	1645	2194	2668	3557	--	--

1.1.2. With a Threadlocker

Table 5: Threadlocker by the Diameter of the Bolt (see Note 2)

	Dimension			
LocTite Product	1/4-inch	1/4- to 5/8-inch	5/8- to 7/8-inch	1-inch +
LocTite 222	OK			
LocTite 242		OK		
LocTite 262			OK	
LocTite 272			High temperature	
LocTite 277				OK

Note 2: The acceptable bolt size ranges for various LocTite® threadlocking products is the LocTite manufacturer's **general** recommendation. Specific applications sometime require that a LocTite product is applied to a bolt size outside the ranges shown here. For example, Milnor specifies LocTite 242 for use on certain 1" bolt applications and has confirmed this usage with the LocTite manufacturer. You may see variances such as this in the documentation for specific machine assemblies.

Table 6: Torque Values if You Apply LocTite 222

Dimension	The Grade of the Bolt							
	Grade 2		Grade 5		Grade 8		Grade BC	
	Pound-inches	N-m	Pound-inches	N-m	Pound-inches	N-m	Pound-inches	N-m
1/4 x 20	60	7	96	11	132	15	108	12
1/4 x 28	72	8	108	12	144	16	--	--

Table 7: Torque Values if You Apply LocTite 242

Dimension	The Grade of the Bolt							
	Grade 2		Grade 5		Grade 8		Grade BC	
	Pound-feet	N-m	Pound-feet	N-m	Pound-feet	N-m	Pound-feet	N-m
5/16 x 18	11	15	17	23	25	34	22	30
5/16 x 24	13	18	19	26	27	37	27	37
3/8 x 16	20	27	31	42	44	60	38	52
3/8 x 24	23	31	35	47	50	68	--	--
7/16 x 14	32	43	49	66	70	95	61	83
7/16 x 20	36	49	55	75	78	106	--	--
1/2 x 13	49	66	75	102	107	145	93	126
1/2 x 20	55	75	85	115	120	163	--	--
9/16 x 12	70	95	109	148	154	209	134	182
9/16 x 18	78	106	121	164	171	232	--	--
5/8 x 11	97	132	150	203	212	287	186	252
5/8 x 18	110	149	170	230	240	325	--	--

Table 8: Torque Values if You Apply LocTite 262

Dimension	The Grade of the Bolt							
	Grade 2		Grade 5		Grade 8		Grade BC	
	Pound-feet	N-m	Pound-feet	N-m	Pound-feet	N-m	Pound-feet	N-m
3/4 x 10	155	210	240	325	338	458	296	401
3/4 x 16	173	235	267	362	378	512	--	--
7/8 x 9	150	203	386	523	546	740	477	647
7/8 x 14	165	224	426	578	601	815	--	--

Table 9: Torque Values if You Apply LocTite 272 (High-Temperature)

	The Grade of the Bolt							
	Grade 2		Grade 5		Grade 8		Grade BC	
Dimension	Pound-feet	N-m	Pound-feet	N-m	Pound-feet	N-m	Pound-feet	N-m
1 x 8	350	475	901	1222	1272	1725	1114	1510
1 x 12	383	519	986	1337	1392	1887	--	--
1 x 14	393	533	1012	1372	1428	1936	--	--
1-1/8 x 7	496	672	1111	1506	1802	2443	1577	2138
1-1/8 x 12	556	754	1247	1691	2022	2741	--	--
1-1/4 x 7	700	949	1568	2126	2544	3449	2226	3018
1-1/4 x 12	774	1049	1737	2355	2816	3818	--	--
1-3/8 x 6	917	1243	2056	2788	3335	4522	2919	3958
1-3/8 x 12	1044	1415	2341	3174	3797	5148	--	--
1-1/2 x 6	1217	1650	2729	3700	4426	6001	3873	5251
1-1/2 x 12	1369	1856	3071	4164	4980	6752	--	--

Table 10: Torque Values if You Apply LocTite 277

	The Grade of the Bolt							
	Grade 2		Grade 5		Grade 8		Grade BC	
Dimension	Pound-feet	N-m	Pound-feet	N-m	Pound-feet	N-m	Pound-feet	N-m
1 x 8	325	441	837	1135	1181	1601	1034	1402
1 x 12	356	483	916	1242	1293	1753	--	--
1 x 14	365	495	939	1273	1326	1798	--	--
1-1/8 x 7	461	625	1032	1399	1674	2270	1464	1985
1-1/8 x 12	516	700	1158	1570	1877	2545	--	--
1-1/4 x 7	650	881	1456	1974	2362	3202	2067	2802
1-1/4 x 12	719	975	1613	2187	2615	3545	--	--
1-3/8 x 6	851	1154	1909	2588	3097	4199	2710	3674
1-3/8 x 12	970	1315	2174	2948	3526	4781	--	--
1-1/2 x 6	1130	1532	2534	3436	4110	5572	3597	4877
1-1/2 x 12	1271	1723	2852	3867	4624	6269	--	--

1.2. Stainless Steel Fasteners

Table 11: Torque Values for Stainless Steel Fasteners 5/16-inch and Smaller

	316 Stainless		18-8 Stainless		18-8 Stainless with Loctite 767	
Dimension	Pound-Inches	N-m	Pound-Inches	N-m	Pound-Inches	N-m
1/4 x 20	79	9	76	9	45	5
1/4 x 28	100	11	94	11	56	6
5/16 x 18	138	16	132	15	79	9
5/16 x 24	148	17	142	16	85	10

Table 12: Torque Values for Stainless Steel Fasteners Larger Than 5/16-inch

	316 Stainless		18-8 Stainless		18-8 Stainless with Loctite 767	
Dimension	**Pound-feet**	**N-m**	**Pound-feet**	**N-m**	**Pound-feet**	**N-m**
3/8 x 16	21	28	20	27	12	16
3/8 x 24	23	31	22	29	13	18
7/16 x 14	33	44	31	42	19	25
7/16 x 20	35	47	33	45	20	27
1/2 x 13	45	61	43	58	26	35
1/2 x 20	47	64	45	61	27	37
9/16 x 12	59	81	57	77	34	46
9/16 x 18	66	89	63	85	38	51
5/8 x 11	97	131	93	125	56	75
5/8 x 18	108	150	104	141	62	84
3/4 x 10	132	179	128	173	77	104
3/4 x 16	130	176	124	168	75	101
7/8 x 9	203	275	194	263	116	158
7/8 x 14	202	273	193	262	116	157
1 x 8	300	406	287	389	172	233
1 x 14	271	367	259	351	156	211
1-1/8 x 7	432	586	413	560	248	336
1-1/8 x 12	408	553	390	529	234	317
1-1/4 x 7	546	740	523	709	314	425
1-1/4 x 12	504	683	480	651	288	390
1-1/2 x 6	930	1261	888	1204	533	722
1-1/2 x 12	732	992	703	953	422	572

2. Preparation

WARNING 2: Fire Hazard—Some solvents and primers are flammable.

- Use threadlocker and primers with sufficient airflow.
- Do not use flammable material near ignition sources.

1. Clean all threads with a wire brush or a different tool.
2. Remove the grease from the fasteners and the mating threads with solvent. Make the parts dry.

   Note 3: LocTite 7649 Primer™ or standard solvents will remove grease from parts.

3. Apply a spray of LocTite 7649 Primer™ or equal on the fasteners and the mating threads. Let the primer dry for one minute minimum.

3. How to Apply a Threadlocker

CAUTION 3: Malfunction Hazard—Heat, vibration, or mechanical shocks can let the fasteners loosen if you do not apply the threadlocker correctly. Loose fasteners can cause malfunctions of the equipment.

- Read the threadlocker manufacturer's instructions and warnings. Obey these instructions.

Apply the threadlocker only to the areas where the fastener threads and the mating threads engage.

Figure 2: Blind Hole

Application	Coverage
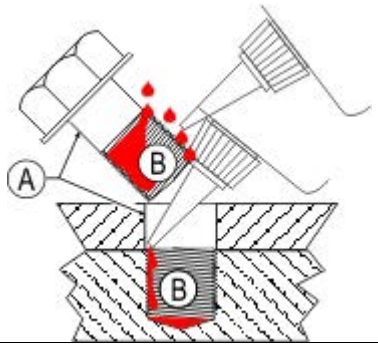	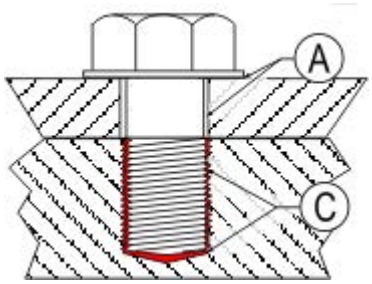

Legend

A. No threadlocker here
B. Apply here
C. Fill all space with threadlocker

3.1. Blind Holes

1. Apply the threadlocker down the threads to the bottom of the hole.
2. Apply the threadlocker to the bolt.
3. Tighten the bolt to the value shown in the correct table (Table 5 to Table 11).

3.2. Through Holes

1. Put the bolt through the assembly.
2. Apply the threadlocker only to the bolt thread area that will engage the nut.
3. Tighten the bolt to the value shown in the correct table (Table 5 to Table 11).

Figure 3: Through Hole

Application	Legend
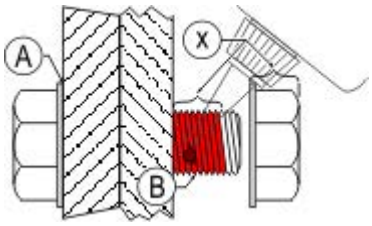	**A.** No threadlocker here **B.** Apply the threadlocker to this area **x.** Nut depth

3.3. Disassembly—For high-strength threadlocker, apply heat for five minutes. Disassemble with hand tools while the parts are hot.

For low-strength and moderate-strength threadlocker, disassemble with hand tools.

Figure 4: Disassembly

Apply Heat to a Small Area	Legend
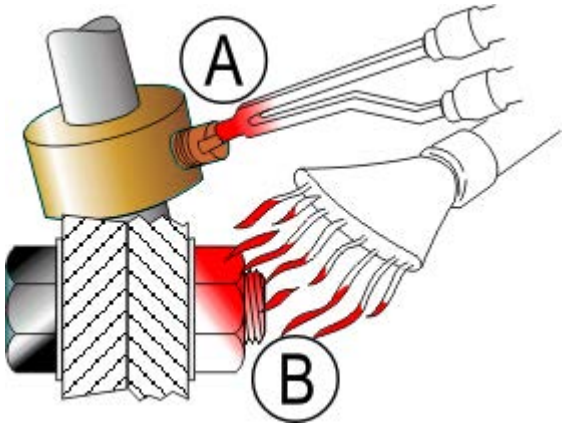	**A.** How to apply heat to a small fastener **B.** How to apply heat to a large fastener

— End of BIUUUM04 —

Housing Assemblies 1

Pellerin Milnor Corporation
P. O. Box 400, Kenner, LA 70063-0400

Litho in U.S.A.

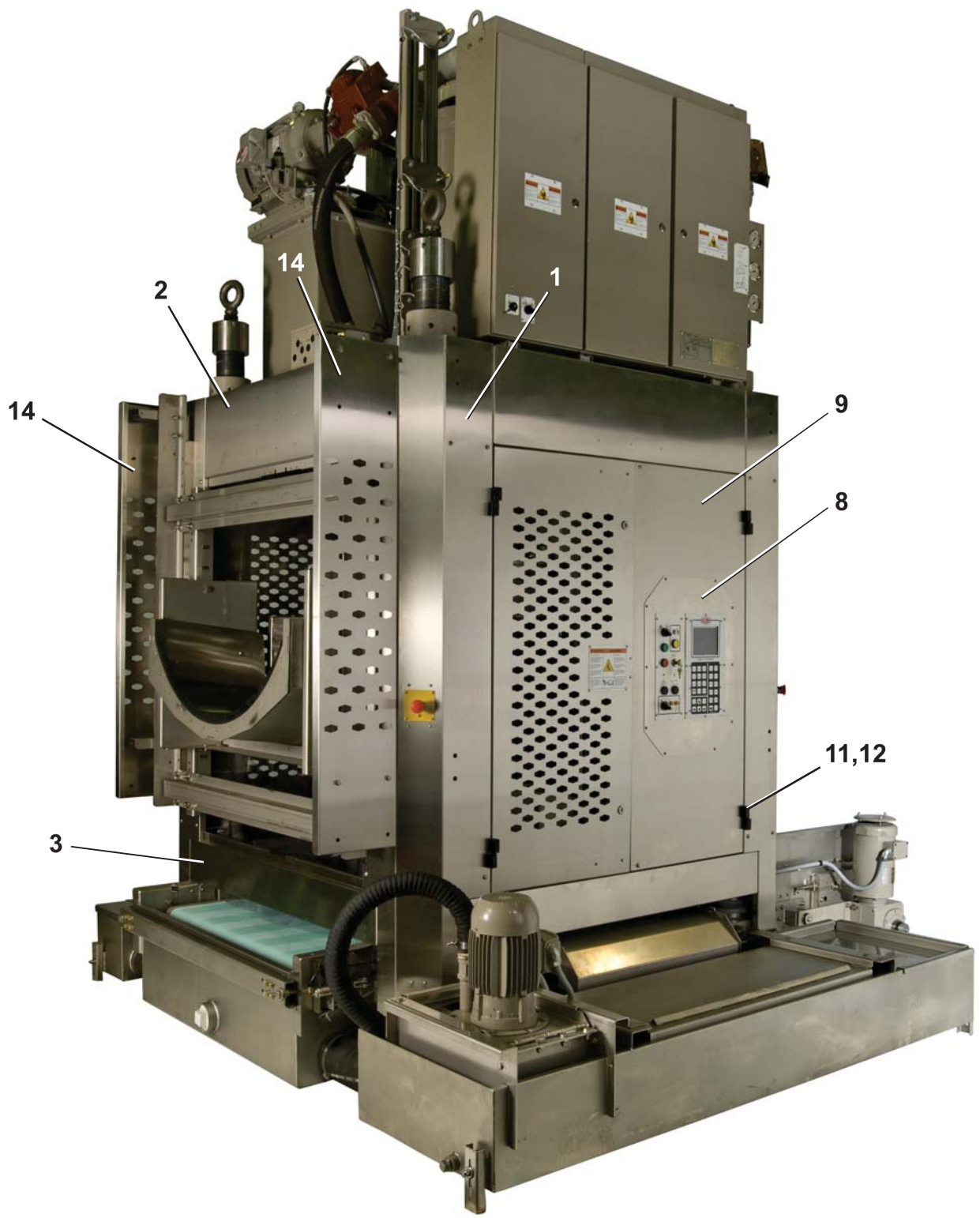

Pellerin Milnor Corporation
P. O. Box 400, Kenner, LA 70063-0400

Litho in U.S.A.

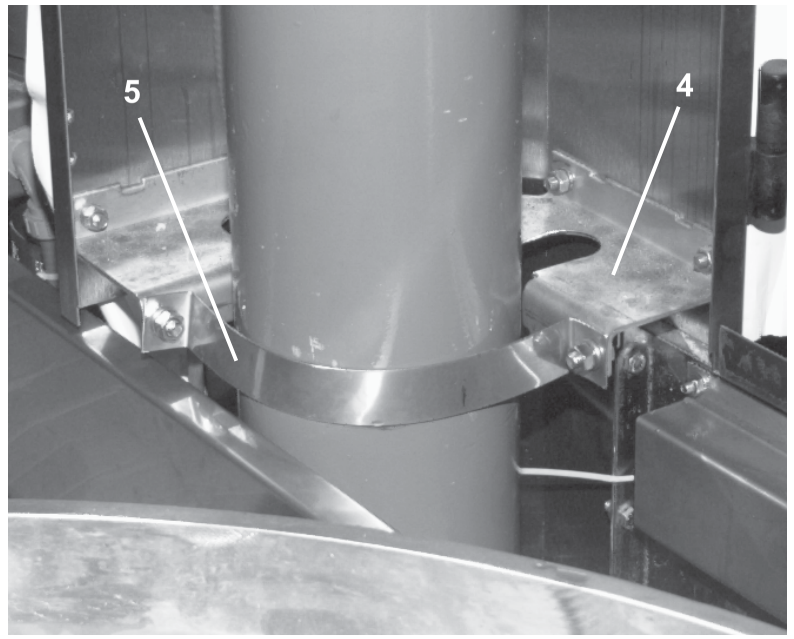

Typical Cosmetic to Frame Connections

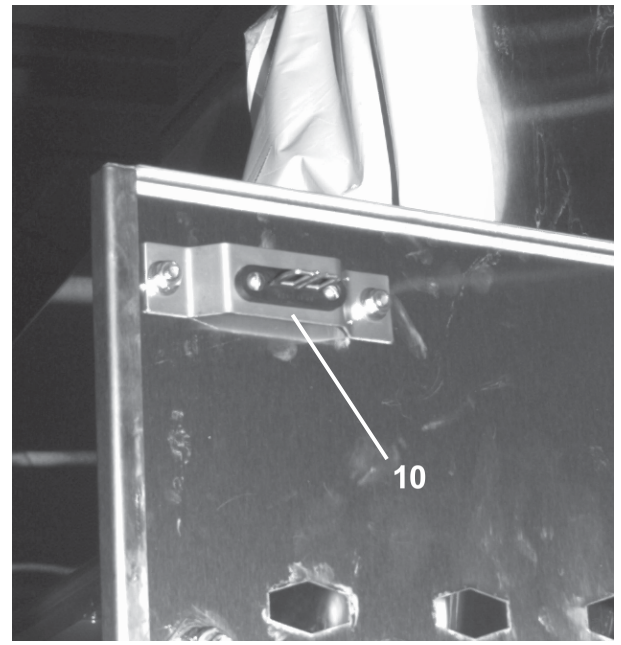

Typical Door Striker Mounting

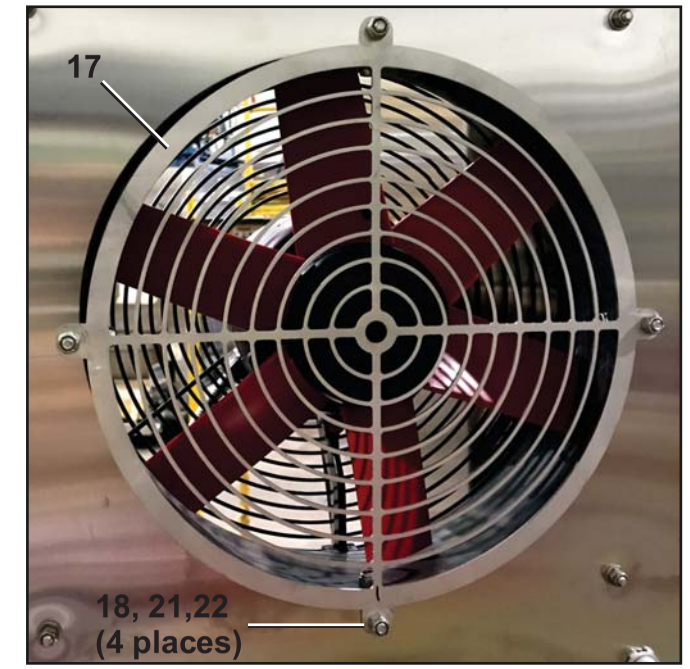

Door with Fan

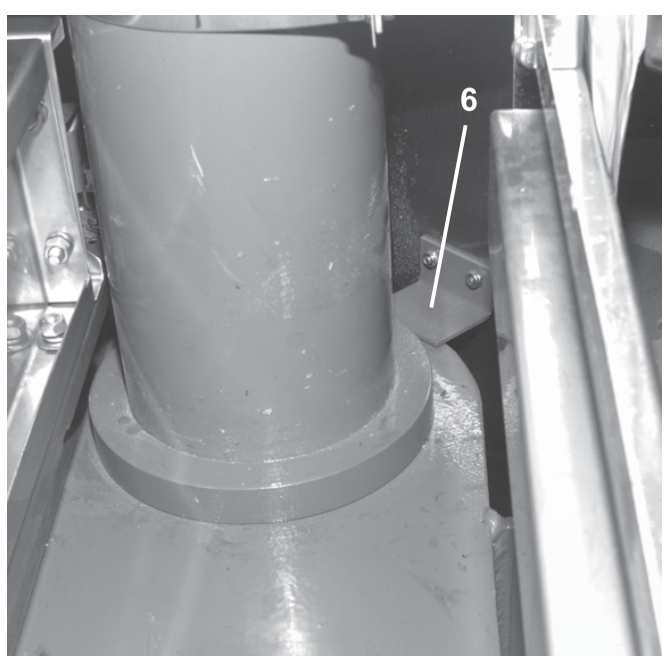

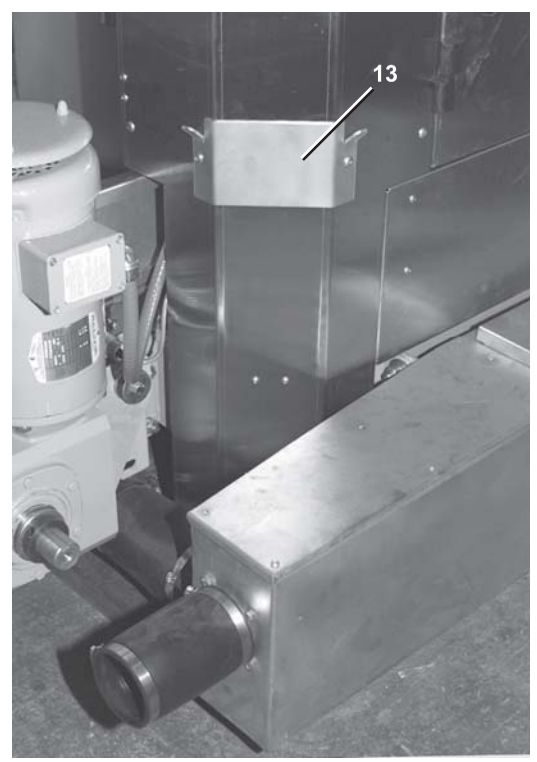

Safey Stand Storage Bracket
(Safety Stands, See BMP110003)

Pellerin Milnor Corporation
P. O. Box 400, Kenner, LA 70063-0400

Litho in U.S.A.

Parts List—Guards, Covers, & Cosmetics

Find the correct assembly first, then find the needed components. The item letters (A, B, C, etc.) assigned to assemblies are referred to in the "Used In" column to identify which components belong to an assembly. The item numbers (1, 2, 3, etc.) assigned to components relate the parts list to the illustration.

Used In	Item	Part Number	Description	Comments
			ASSEMBLIES	
	A	ACS10000	SSPRESS COSMETIC ASSY	MP1540,MP1640,MP1650 MPL640, MPL650
	B	ACS10000A	COSMETIC ASSY W/ BOOSTER PUMP	MP1556,MP1656 MPL556, MPL656
	C	ACS10019A	DOOR W/FAN ON LF SIDE-MP15/16 R,CR	All
			COMPONENTS	
all	1	07 10200	COSMETIC COVER CORNER	
all	2	07 10210	COSM TOP DOOR FRAME	
all	3	07 10284	COSM CONV LOADEND FRAME	
all	4	07 10205	COSM CORNER ATTACH BRKT	
all	5	07 10206	COSMETIC CORNER STRAP	
all	6	07 10200B	COSMETIC CORNER SUPPORT BRKT	
all	7	07 10246	SSPRESS DOOR PANEL	
all	8	07 10255A	SPRESSS FLT REC SWPNL	
all	9	07 10256	SSPRESS DOOR-CTRL PANNEL	
all	10	07 10363	DOOR STRIKER MTG BRKT	
all	11	27A115	OFFSET HINGE RGTHD FREESWING	
all	12	27A116	OFFSET HINGE LFTHD FREESWING	
all	13	07 10204	SAFETY STAND HANGER-SSPRESS	
all	14	07 10018	LOADCHUTE GUARD 7632	
all	15	07 10616	SSPRESS DOOR-CNTRL PANEL-FAN-RT	
all	15	07 10616A	SSPRESS DOOR-CNTRL PANEL-FAN-LFT	
all	16	13AF210071	FAN 2100 CFM 240V 60HZ	
all	17	07 10680	FAN GUARD SS PRESS	
all	18	07 10619	PRESS FAN GUARD MNT	
all	19	15N200	FILMACSCR 1/4-20UNCX2 SS18-8 S	
all	20	15U185	FLATWASHER(USS STD) 1/4" ZNC P	
all	21	15G164NE	HEXLOKNUT NYL 1/4-20 UNC2A SS.	
all	22	15K031	BUTSOKCAPSCR 1/4-20X1/2 SS18-8	

Used In	Item	Part Number	Description	Comments

Can Safety Stands and Diaphragm Bar

MP1540xx, MP1556xx, MP1640xx, MP1650xx, MP1656xx, MP1A50xx
MPL556xx, MPL640xx, MPL650xx, MPL656xx

⚠ DANGER ⚠

CRUSH HAZARD - Descending can and/or platen will crush anyone under it. Can and/or platen can descend even with power off.

NEVER crawl or reach under the can and/or platen.

Lock OFF and tag out power and secure factory-supplied safety supports in place before crawling or reaching under the can and/or platen to perform service or maintenance.

ALWAYS ensure all personnel are clear of the press and receiving conveyor before returning power to either machine for service or maintenance.

Figure 1: Can Safety Stand Installation

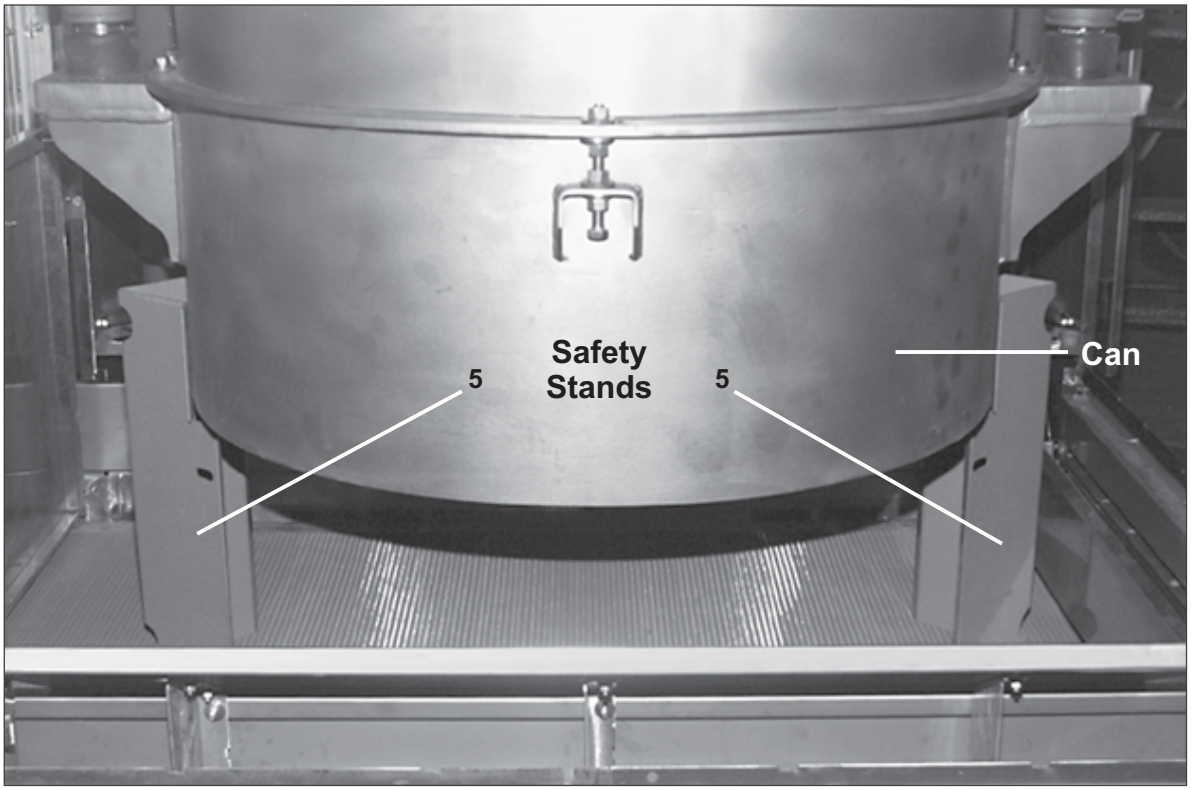

(Always install Safety Stands and Diaphragm Safety Bar before servicing. See BIUUUS27.)

Can Safety Stands and Diaphragm Bar

MP1540xx, MP1556xx, MP1640xx, MP1650xx, MP1656xx, MP1A50xx
MPL556xx, MPL640xx, MPL650xx, MPL656xx

Figure 2: Safety stand storage

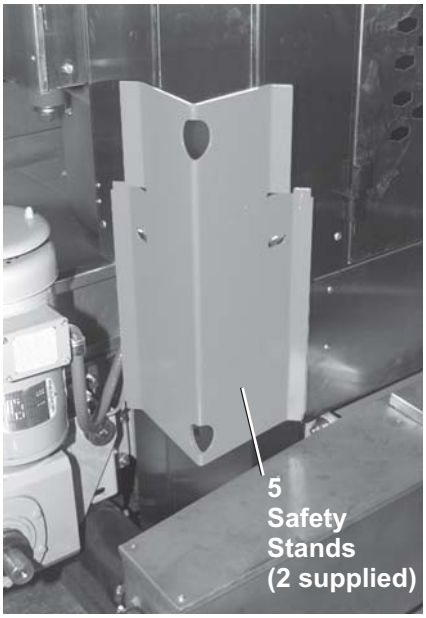

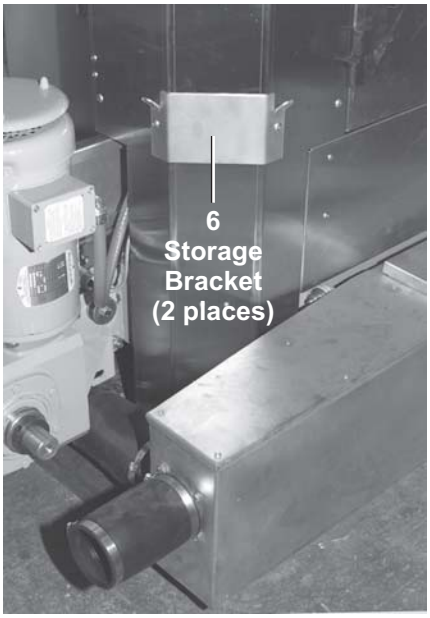

Figure 3: Diaphragm Safety Bar Installed

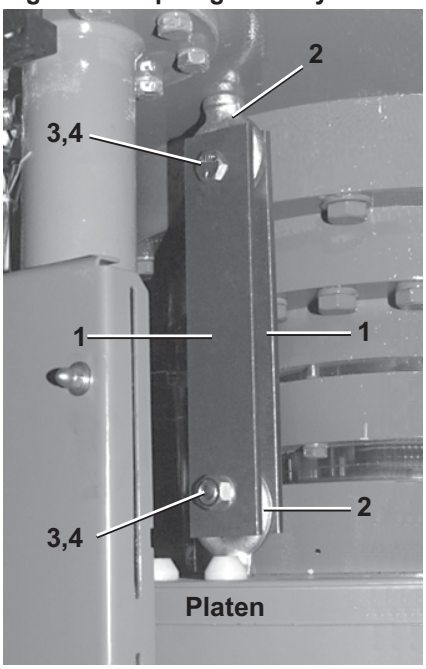

(All models except MP1A_)

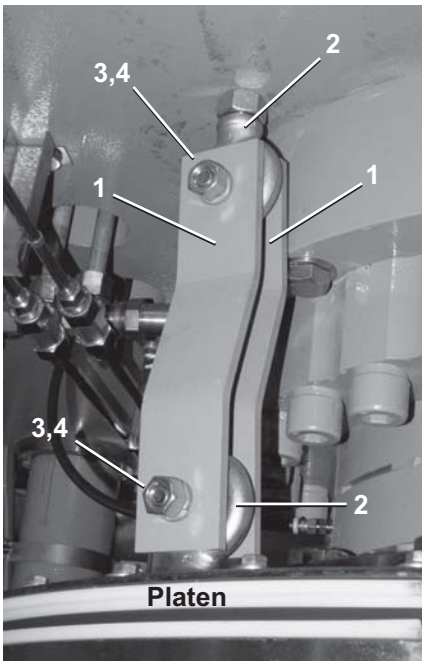

(MP1A_ only)

Figure 4: Platen plugs

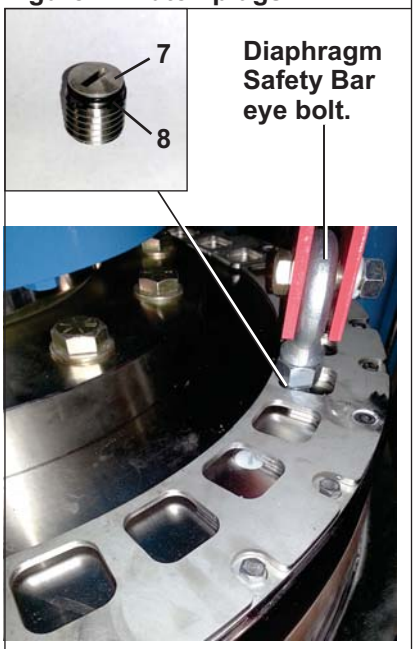

When the Diaphragm Safety Bar eye bolt is removed, plug the threaded hole with the steel plug and o-ring (items 7 & 8).

Can Safety Stands and Diaphragm Bar

MP1540xx, MP1556xx, MP1640xx, MP1650xx, MP1656xx, MP1A50xx
MPL556xx, MPL640xx, MPL650xx, MPL656xx

Parts List—Can Safety Stands and Diaphragm Bar

Find the correct assembly first, then find the needed components. The item letters (A, B, C, etc.) assigned to assemblies are referred to in the "Used In" column to identify which components belong to an assembly. The item numbers (1, 2, 3, etc.) assigned to components relate the parts list to the illustration.

Used In	Item	Part Number	Description	Comments
			ASSEMBLIES	
	A	AHT10031A	SHIP WITH MACHINE-SSPRESS	MP1540 MP1556, MP1640 MPL556, MPL640
	B	AHT10031	SHIP WITH MACHINE-MP1656	MP1650, MP1656 MPL650, MPL656
	C	AHT10036	SHIP WITH MACHINE-MP1A03	MP1A50
	D	AHT10030	MEMBRANE SAFETY BAR-MP1603	MP1540 MP1556, MP1640 MPL556, MPL640
	E	AHT10030A	MEMBRANE SAFETY BAR-MP1604	MP1650, MP1656 MPL650, MPL656
	F	AHT10030B	DIAPHM SAFETY BAR ASSY-MP1A03	MP1A50
			COMPONENTS	
D E F	1 1 1	07 10262 07 10262B 07 10282	DIAPHRAM SAFETY BAR DIAPHRAM SAFETY BAR-16"LG MEMBRANE SAFETY BAR-47BAR	
all	2	17A054	EYEBOLT 1-8 UNC ZINC PLATED	
all	3	15K235AB	HXCAPSCR 3/4-10UNC2AX3"GR8 ZIN	
all	4	15G240	HXNUT 3/4-10UNC2B SAE ZINC GR2	
AB C	5 5	07 30093 07 10385	SAFETY SUPPORT-BELL TF60 SAFETY STAND-48"CAN MP1A03	
all	6	07 10204	SAFETY STAND HANGER-SSPRESS	
All	7	X7 10059	PLUG-PLATEN LIFTING EYE BOLT	
All	8	60C112	ORING 5/8IDX3/32CS BUNA70 #114	

Ship With

MP1540xx, MP1556xx, MP1640xx, MP1650xx, MP1656xx, MP1A50xx
MPL556xx, MPL640xx, MPL650xx, MPL656xx

Pellerin Milnor Corporation
P. O. Box 400, Kenner, LA 70063-0400

Litho in U.S.A.

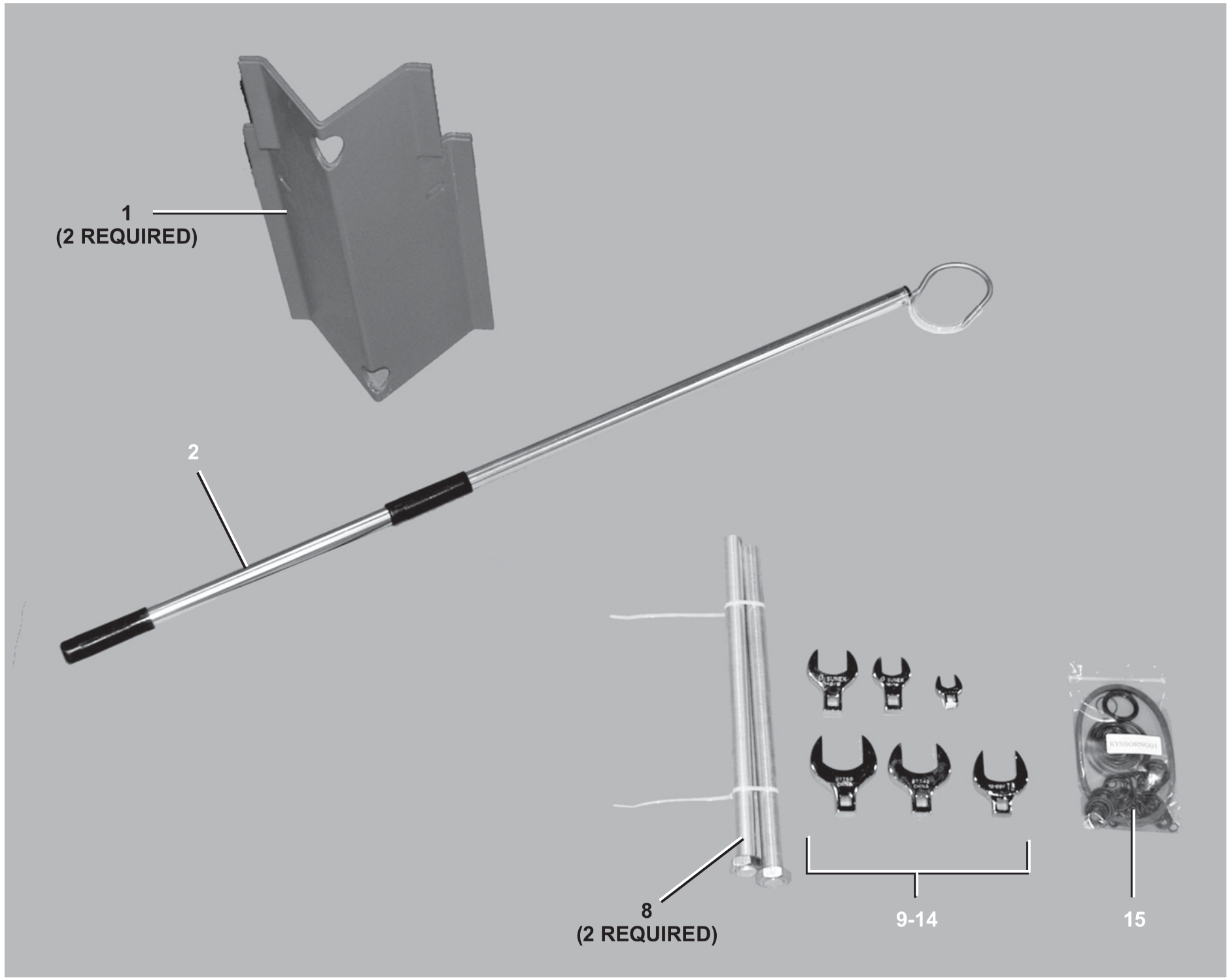

Plugs:
Items 16-23,30
(not shown)
See parts list.

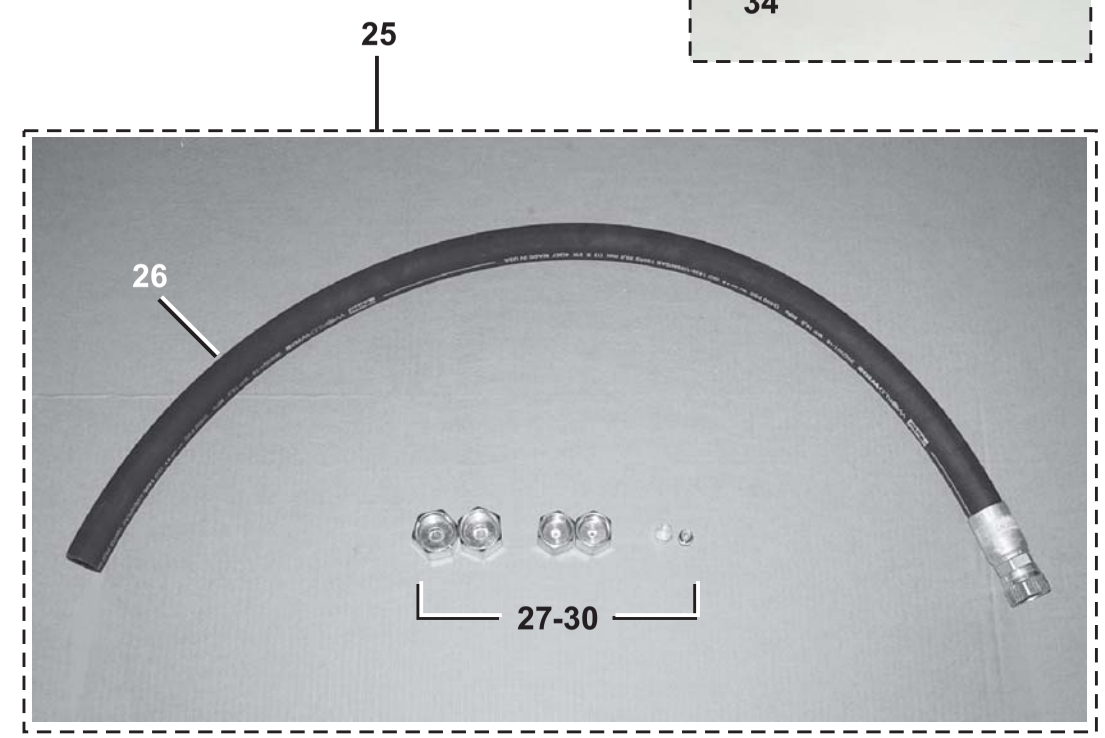

Ship With

MP1540xx, MP1556xx, MP1640xx, MP1650xx, MP1656xx, MP1A50xx
MPL556xx, MPL640xx, MPL650xx, MPL656xx

Pellerin Milnor Corporation
P. O. Box 400, Kenner, LA 70063-0400

Litho in U.S.A.

Parts List—Ship With

Find the correct assembly first, then find the needed components. The item letters (A, B, C, etc.) assigned to assemblies are referred to in the "Used In" column to identify which components belong to an assembly. The item numbers (1, 2, 3, etc.) assigned to components relate the parts list to the illustration.

Used In	Item	Part Number	Description	Comments
			----------ASSEMBLIES----------	
	A	AHT10031A	SHIP WITH MACHINE-MP1540,1556,1640	MP1540 MP1550, Mp1640 MPL550, MPL640
	B	AHT10031	SHIP WITH MACHINE-MP1656	MP1656, Mp1650 MPL656, MPL650
	C	AHT10036	SHIP WITH MACHINE-MP1AXX	MP1A50
			----------COMPONENTS----------	
all	1	07 30093	SAFETY SUPPORT-BELL TF60	
all	1	07 10385	SAFETY STAND-48"CAN MP1A03	
all	2	27A900	ALUM. GAFF 5/16"DIAX48"L W/3"	
all	8	17R036A18A	THRD ROD 1-14X18" ZINC	
all	9	97G006C	11/16" X 3/8" DR CROWSFOOT	
all	10	97G010C	15/16" X 1/2" DR CROWSFOOT	
all	11	97G014C	1+3/8" X 1/2" DR CROWSFOOT	
all	12	97G021A	1+1/2" X 1/2" DR CROWSFOOT	
all	13	97G022C	1+5/8" X 1/2" DR CROWSFOOT	
all	14	97G023C	1+7/8" X 1/2" DR CROWSFOOT	
all	15	KYSSORNG01	SS PRESS HYD ORING ASST KIT	
all	16	51P081	PLUG TAPERED 5.7"CAPLUG#T1092	
all	17	51P082	PLUGCAPNOTHD 1.437"CAPLUG#EC23	
all	18	51P083	PLUGCAPNOTHD 1.187"CAPLUG#EC19	
all	19	51P084	PLUGTHD.3/4"O.R.CAPLUG#PDF-120	
all	20	51P085	PLUGTHD.1/4"JIC CAPLUG#PD40	
all	21	51P086	PLUGTHD.1"O.R.CAPLUG#PDF160	
all	22	51P087	PLUGTHD.1"JIC CAPLUG#PD-160	
all	23	51P088	PLUGCAPSLV 13/16 #SC-13/16	
all	25	AHT10037	TROUBLE SHOOTING KIT-SSPRESS	
all	26	60EH80C48B	ASSY=HYDHOSE+ONE END 1"X48"LG	(PART OF ITEM 25)
all	27	52ZN1AS003	TUBEFIT NUT+CAP #16-FNL-S	(PART OF ITEM 25)
all	28	52ZN0PS003	TUBEFIT NUT+CAP 3/4" 12 FNL-S	(PART OF ITEM 25)

Parts List, cont.— Ship With

Used In	Item	Part Number	Description	Comments
A	31	AHT10038	RAM INSTL BOLTS/LUBE-MP1603	
BC	31	AHT10039	RAM INSTL BOLTS/LUBE-MP1604	
A	32	X7 10504	RAM BOLT 1-14X5"CHASED THREAD	(PART OF ITEM 31)
BC	32	X7 10505	RAM BOLT 1-14X7"CHASED THREAD	(PART OF ITEM 31)
all	33	15U393	FLTWASH 1" HARD ASTM F436	(PART OF ITEM 31)
all	34	20C510	LOCTITE MOLYPASTE#51048	(PART OF ITEM 31)

Safety Unload Door

MP1540, MP1556, MP1640, MP1650, MP1656, MP1A50
MPL556, MPL640, MPL650, MPL656

BMP110005/2020275A
(1 / 3)

Pellerin Milnor Corporation
P. O. Box 400, Kenner, LA 70063-0400

Litho in U.S.A.

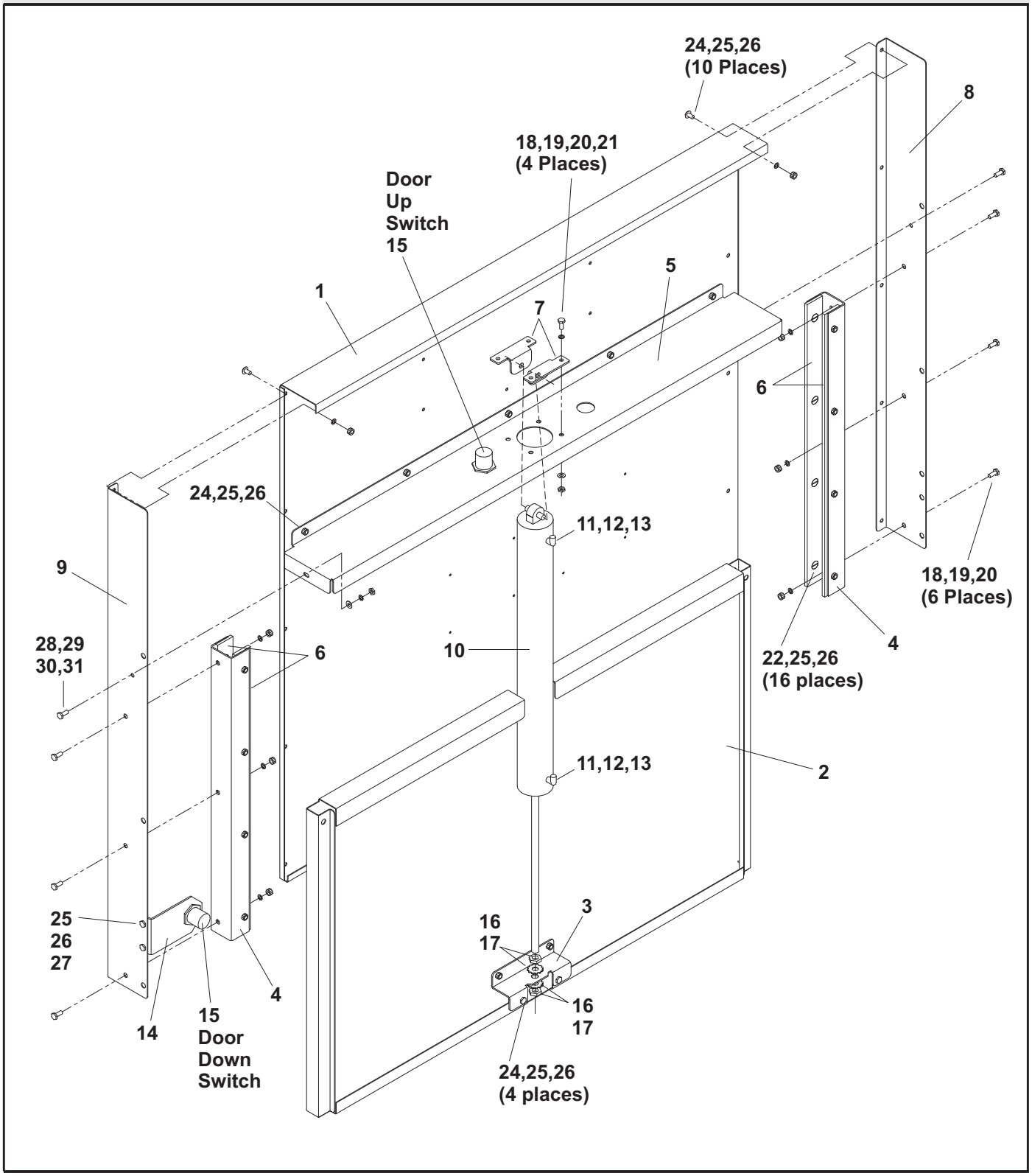

Safety Unload Door

MP1540, MP1556, MP1640, MP1650, MP1656, MP1A50 MPL556, MPL640, MPL650, MPL656

Pellerin Milnor Corporation
P. O. Box 400, Kenner, LA 70063-0400

Litho in U.S.A.

Parts List—Unload Door

Find the correct assembly first, then find the needed components. The item letters (A, B, C, etc.) assigned to assemblies are referred to in the "Used In" column to identify which components belong to an assembly. The item numbers (1, 2, 3, etc.) assigned to components relate the parts list to the illustration.

Used In	Item	Part Number	Description	Comments
			ASSEMBLIES	
	A	ACS10001A	UNLOAD DOOR ASSY-SSPRESS	MP1540, MP1556, MPL556 MP1640, MP1650, MP1656 MPL640, MPL650, MPL656
	B	ACS10004A	CONV UNLOAD DOOR ASSY-MP1A56	MP1A50
			COMPONENTS	
A	1	07 10633	CONV UNLOAD PANNEL	
B	1	07 10653	CONV UNLOAD PANNEL-MP1A56	
A	2	07 10632	CONV UNLOAD DOOR-SSPRESS	
B	2	07 10654	CONV UNLOAD DOOR	
A	3	07 10217	UNLOAD DOOR LIFTING BRKT	
B	3	07 10217A	DOOR LIFTING BRKT-MP1A56	
all	4	07 10218	DOOR TRACK-INSIDE	
A	5	07 10631	AIR CYL MTG CHANNEL	
B	5	07 10651	AIRCYL MTG CHANNEL-MP1A56	
all	6	07 10220	DOOR TRACK UHMW LINER	
all	7	07 10634	AIRCYL MTG BRKT-UNLOAD DOOR	
A	8	07 10630	UNLOAD DOOR MTG ANGLE-RT	
B	8	07 10652	UNLOAD DOOR MTG ANGLE-RT	
A	9	07 10630A	UNLOAD DOOR MTG ANGLE-LF	
B	9	07 10652A	UNLOAD DOOR MTG ANGLE-LF	
A	10	27C120	AIRCYL 1.5"BORE X 20"STROKE	
B	10	27C124	AIRCYL 1.5"BORE X 24"STROKE	
all	11	53A031B	BODY-EL90MALE.25X1/8 #269C-42B	
all	12	53A500	SLEEVE DELRIN 1/4"OD#60PT-4	
all	13	53A501	TUBE INSERT .163"OD #63PT-4-40	
all	14	07 10263	PROX.SW BKT-DISC DOOR DOWN	
all	15	09RPS30ADS	PROX SW QK CONN 30M NO-DC SHLD	
all	16	15G222A	HXFINJAMNUT 7/16-20UNF2B SS	
all	17	15U271	LOKWASH INTOOTH 7/16ZN	
all	18	15K052	HXCAPSCR 5/16-18UNC2AX3/4 SS18	
all	19	15U200S	FLATWASHER US STD 5/16 SS18-8	
all	20	15U205	LOCKWASHER MEDIUM 5/16" 18-8SS	
all	21	15G186	HEXNUT 5/16-18UNC2 SS18-8	

Pellerin Milnor Corporation
P. O. Box 400, Kenner, LA 70063-0400

Litho in U.S.A.

Parts List, cont.

Find the correct assembly first, then find the needed components. The item letters (A, B, C, etc.) assigned to assemblies are referred to in the "Used In" column to identify which components belong to an assembly. The item numbers (1, 2, 3, etc.) assigned to components relate the parts list to the illustration.

Used In	Item	Part Number	Description	Comments
all	22	15N173	FLATMACSCR 1/4-20NCX5/8SS18-8	
all	23	15G164	HX THIN LOCKNUT NYL1/4-20 SS	
all	24	15K033	BUTSOKCAPSCR 1/4-20X5/8 SS18-8	
all	25	15U181	LOCKWASHER MEDIUM 1/4 SS18-8	
all	26	15G170	HEXNUT 1/4-20UNC2 SS18-8	
all	27	15N186	HXCAPSCR 1/4-20X3/4 SS18-8	
all	28	15K136	HEXCAPSCR 3/8-16UNCX3+1/2 GR5	
all	29	15U260	LOCKWASHER MEDIUM 3/8 SS18-8	
all	30	15G206	HEXNUT 3/8-16 UNC2 SS 18-8	
all	31	15U245	FLTWASH 3/8 STD COMM 18-8 SS	

.

Frame Assembly

MP1540xx, MP1556xx, MP1640xx, MP1650xx, MP1656xx, MP1A50xx
MPL556xx, MPL640xx, MPL650xx, MPL656xx

Pellerin Milnor Corporation
P. O. Box 400, Kenner, LA 70063-0400

Litho in U.S.A.

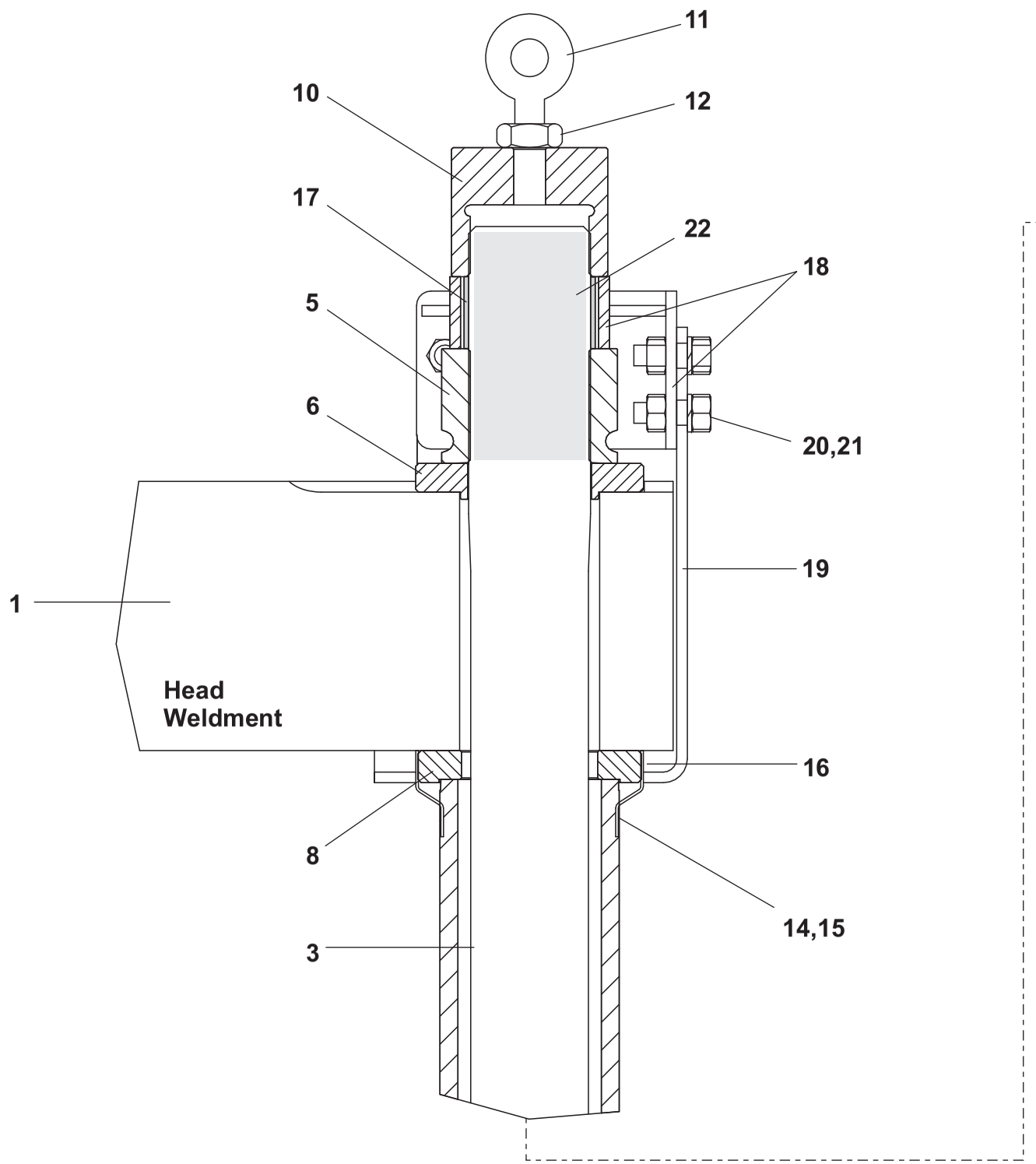

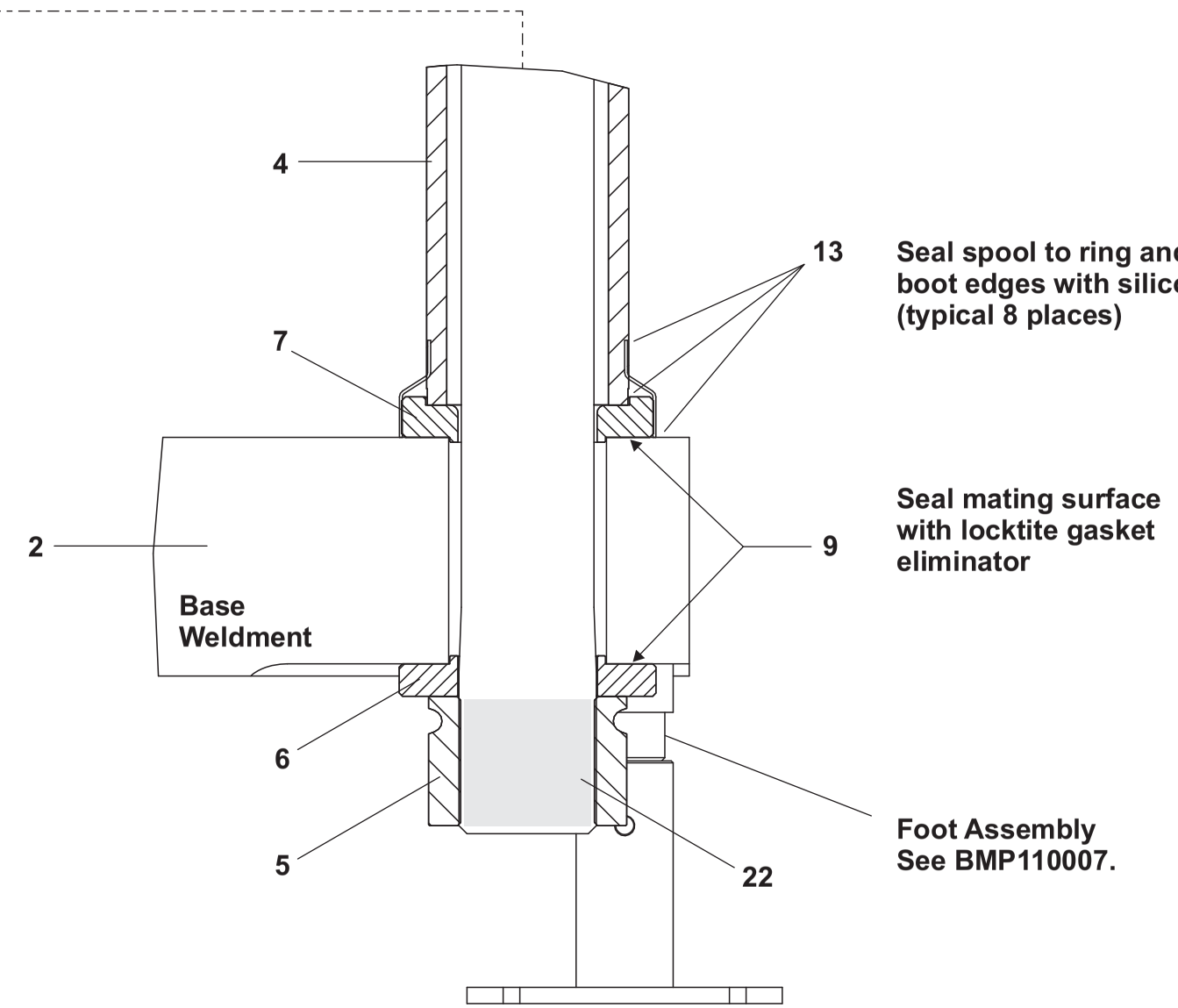

Frame Assembly

MP1540xx, MP1556xx, MP1640xx, MP1650xx, MP1656xx, MP1A50xx
MPL556xx, MPL640xx, MPL650xx, MPL656xx

Pellerin Milnor Corporation
P. O. Box 400, Kenner, LA 70063-0400

Litho in U.S.A.

Parts List—Frame Assembly

Find the correct assembly first, then find the needed components. The item letters (A, B, C, etc.) assigned to assemblies are referred to in the "Used In" column to identify which components belong to an assembly. The item numbers (1, 2, 3, etc.) assigned to components relate the parts list to the illustration.

Used In	Item	Part Number	Description	Comments
			ASSEMBLIES	
	A	GHG10005	SSPRESS FRAME ASSY-MP1603	MP1540
	B	GHG10011	SSPRESS FRAME ASSY-MP1556	MP1556, MPL556
	C	GHG10012	SSPRESS FRAME ASSY-MP1640	MP1640, MPL640
	D	GHG10010	SSPRESS FRAME ASSY-MP1656	MP1656, MP1650 MPL656, MPL650
	E	GHG10007A	SSPRESS FRAME ASSY-MP1A56	MP1A50
	F	G80TD002	TIEROD HOLD DOWN INST-7.50 HEAD	MP1540
	G	G80TD001	TIEROD HOLD DOWN INST-9.50 HEAD	MP1556, MP1640 MPL556, MPL640 MP1656, MP1650 MPL656, MPL650
	H	G80TD003	TIEROD HOLD DOWN INST-11.50 HEAD	MP1A50
			COMPONENTS	
A	1	W7 10060	PRESS HEAD WELDMENT-35BAR	
B	1	W7 10076	PRESS HEAD WELDMENT-14"RAM	
C	1	W7 10641	PRESS HEAD WELDMENT-MP1640	
D	1	W7 10627	PRESS HEAD WELDMENT-MP1656	
E	1	W7 10120	PRESS HEAD WELDMENT-MP1AXX	
A	2	W7 10008	PRESS BASE WELDMENT	
BC	2	W7 10010	SSPRESS BASE WELDMENT-45BAR	
D	2	W7 10626	SSPRESS BASE WELDMENT-MP1656	
E	2	W7 10121	BASE WELDMENT-MP1AXX	
A	3	X7 10600A	TENSIONING ROD-MP1540/50/1603	
BC	3	X7 10642	TENSIONING ROD-MP1556/1640	
D	3	X7 10625	TENSIONING ROD-16"RAM MP1656	
E	3	X7 10122	TENSIONING ROD-MP1AXX	
ABC	4	X7 10546	TIE ROD SPOOL-64.75LG	
D	4	X7 10536	TIE ROD SPOOL-66.25LG	
E	4	X7 10544A	TIE ROD SPOOL 80.00 LG	
all	5	X7 10584	ROD TENSIONING NUT-SSPRESS	
all	6	X7 10548	PRELOAD RING-TENSION ROD	
all	7	X7 10541	SPOOL RING-BASE 4.82 PILOT	
all	8	X7 10542	SPOOL RING-HEAD	
all	9	20C013B	GASKET ELIMINATOR LOC.#51580	
all	10	X7 10587	LIFTING EYE ADAPTER-SSPRESS	
all	11	17A054A	EYEBOLT W/SHOULDER 1.25-7X3 ST	
all	12	15G260	HXNUT 1+1/4-7UNC2B BLK GR2	

Parts List, cont.—Frame Assembly

Used In	Item	Part Number	Description	Comments
all	15	27A083S	HOSECLAMP 5+1/8-7"SSSCR#HSS104	
all	16	27A089	HOSECLAMP S.S.SCREW 6+5/8-8.5	
all	17	12P061	MED-WALL SLEEVE 25' PER ROLL	
all	18	W7 10590	TIEROD HOLD DOWN WLMT	
F	19	07 10594A	TIEROD HOLD DOWN BRKT-MP1603	
G	19	07 10594	TIEROD HOLD DOWN BRKT	
H	19	07 10594B	TIEROD HOLD DOWN BRKT-11.50 HEAD	
all	20	15K232A	HEXCAPSCR 3/4-10X2 GR8 ZINC	
all	21	15U340	LOCKWASH MEDIUM 3/4 ZINCPL	
all	22	20C510	LOCTITE MOLYPASTE#51048	

Foot Assembly

MP1540xx, MP1556xx, MP1640xx, MP1650xx, MP1656xx, MP1A50xx
MPL556xx, MPL640xx, MPL650xx, MPL656xx

Pellerin Milnor Corporation
P. O. Box 400, Kenner, LA 70063-0400

Litho in U.S.A.

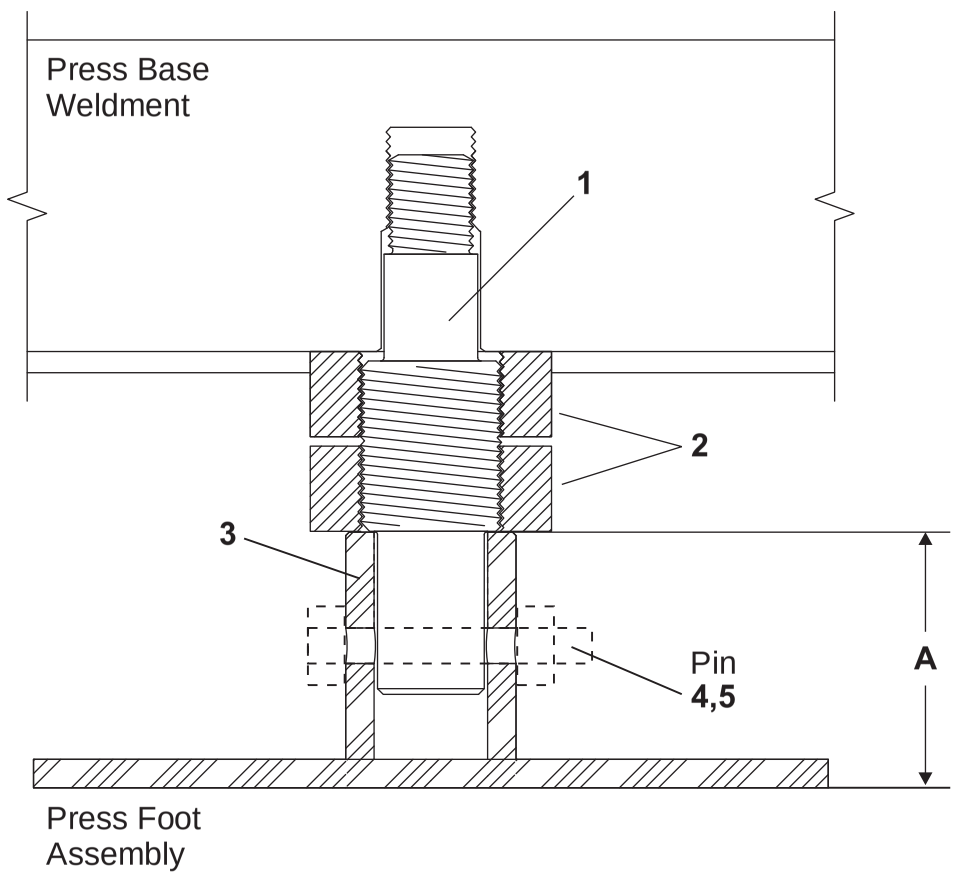

Foot	A
W7 10606C	3.0”
W7 10606	4.5”
W7 10606B	5.5”
W7 10606A	7.5”
W7 10606D	11.5”

Parts List—Foot Assembly

Find the correct assembly first, then find the needed components. The item letters (A, B, C, etc.) assigned to assemblies are referred to in the "Used In" column to identify which components belong to an assembly. The item numbers (1, 2, 3, etc.) assigned to components relate the parts list to the illustration.

Used In	Item	Part Number	Description	Comments
			----------COMPONENTS----------	
all	1	X7 10585A	PRESS SUPPORT ROD 1-1/2"-6UNC	
all	2	X7 10563	PRESS FOOT MTG NUT-MACHINED	
all	3A	W7 10606C	SSPRESS FOOT WELDMENT-3.0"	3” FOOT
all	3B	W7 10606	SSPRESS FOOT WELDMENT-4.5”	4.5” FOOT
all	3C	W7 10606B	SSPRESS FOOT WELDMENT-5.5"	5.5” FOOT
all	3D	W7 10606A	SSPRESS FOOT WELDMENT-7.5"	7.5” FOOT
all	3E	W7 10606D	SSPRESS FOOT WELDMENT-11.5"	11.5” FOOT
All	4	15K210A	HXCAPSCR 1/2"-13X4" GRD 8 ZINC	
All	5	15G234N	HXLOCKNUT NYL 1/2-13UNC2 STL/Z	

Reuse Tank

MP1540xx, MP1556xx, MP1640xx, MP1650xx, MP1656xx, MP1A50xx
MPL556xx, MPL640xx, MPL650xx, MPL656xx

Pellerin Milnor Corporation
P. O. Box 400, Kenner, LA 70063-0400

Litho in U.S.A.

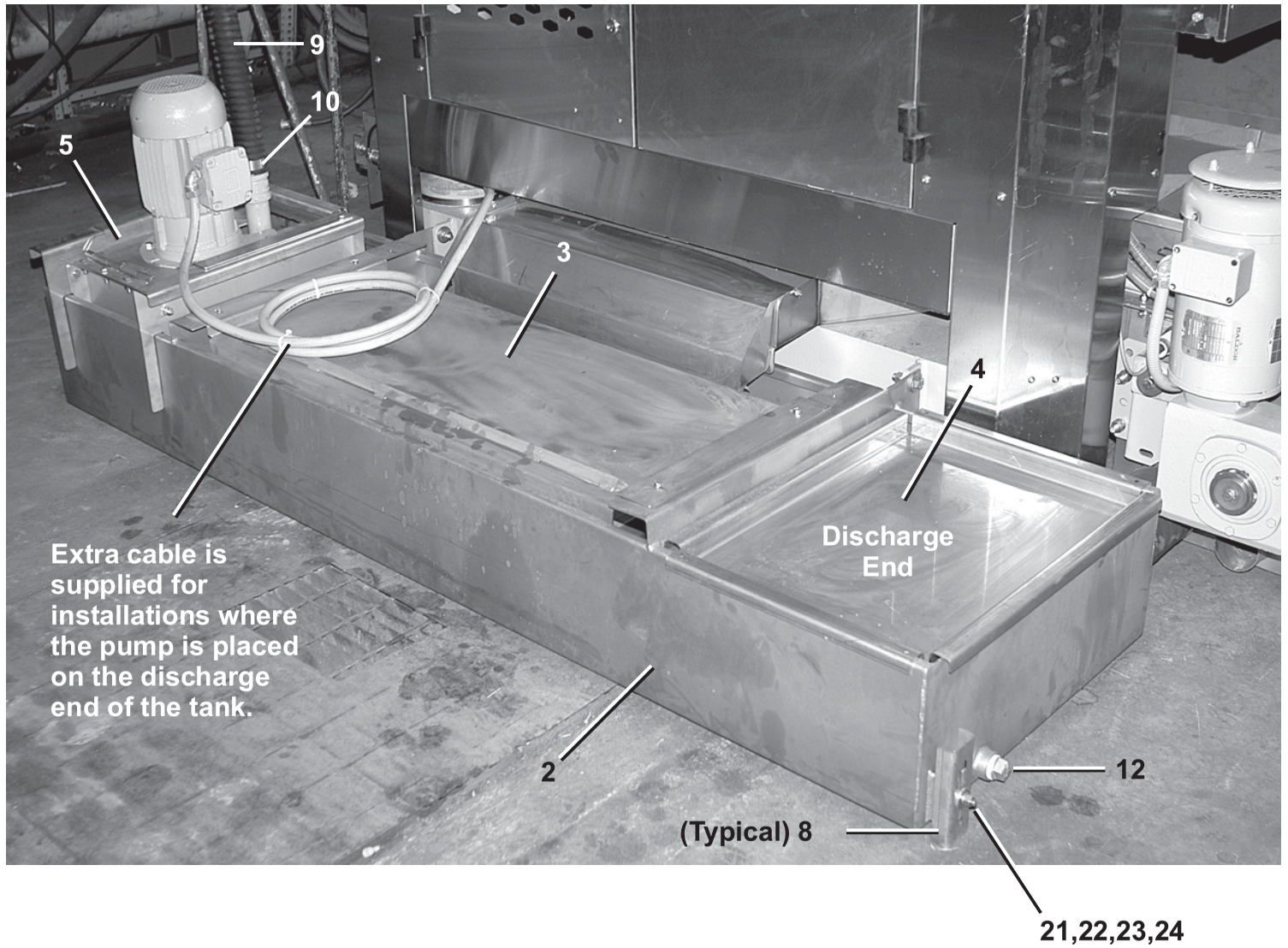

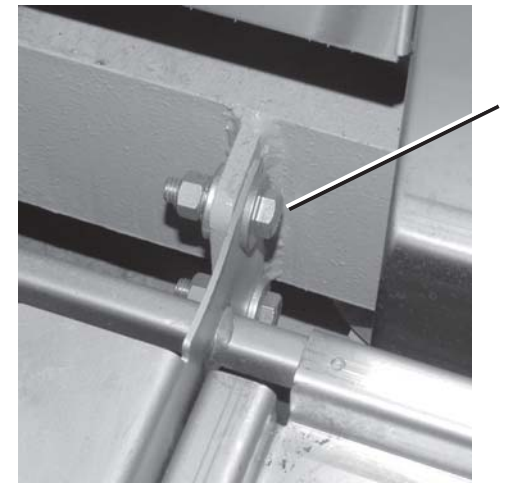

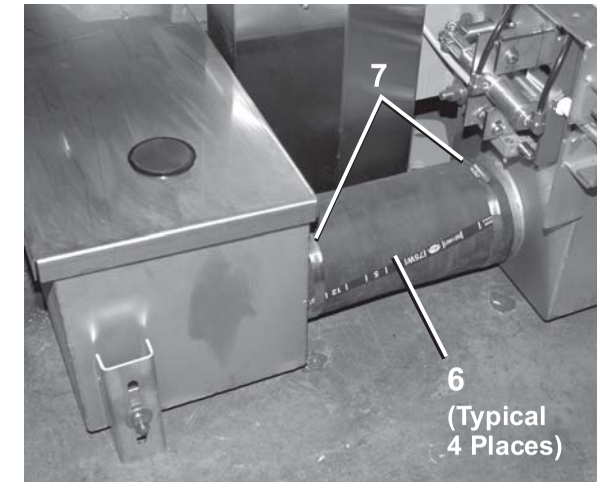

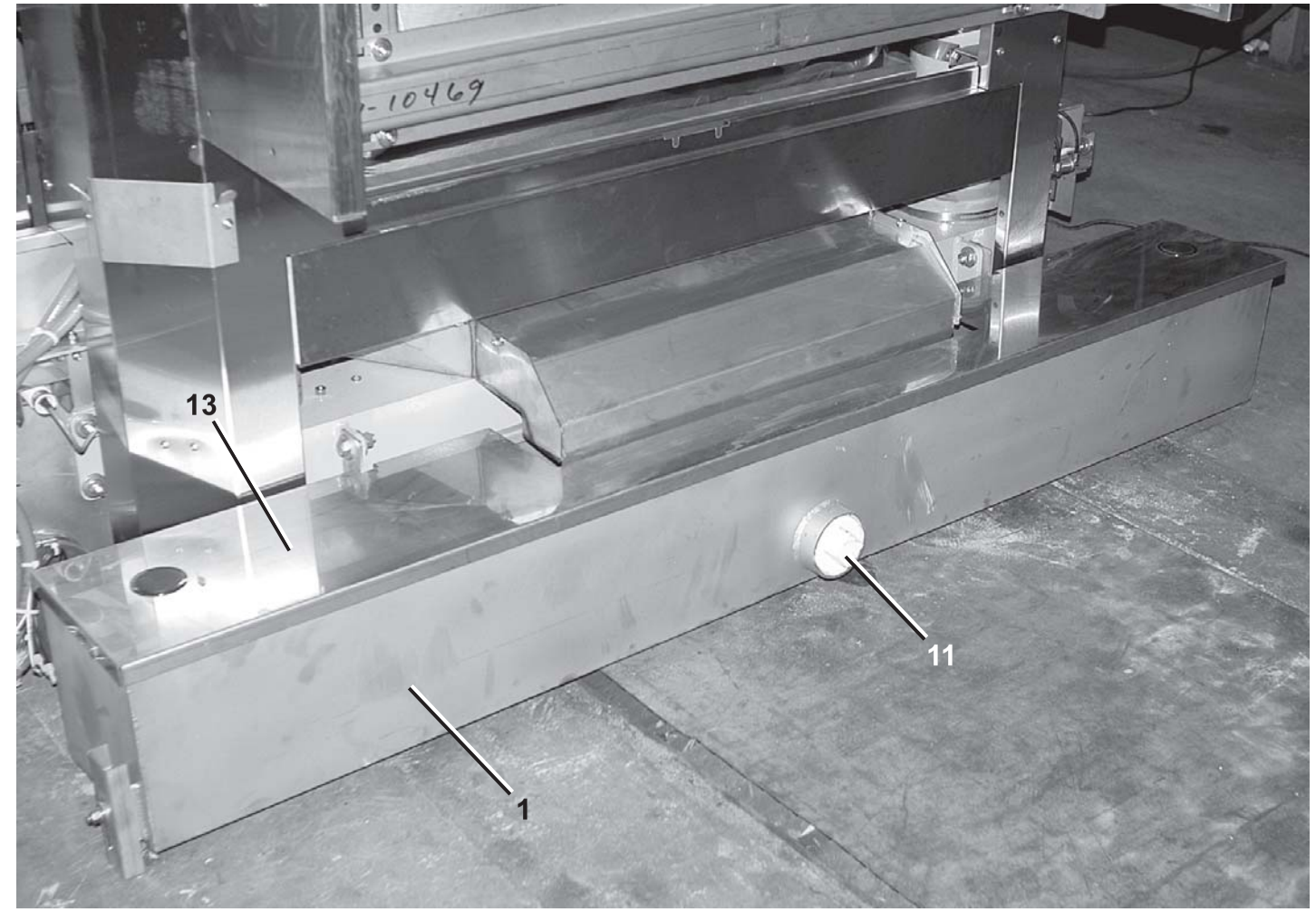

MP1540, MP1556, MP1640, MP1650, MP1656 reuse tanks are shown.
MP1A50 reuse tank is similar. See parts list.

Pellerin Milnor Corporation
P. O. Box 400, Kenner, LA 70063-0400

Litho in U.S.A.

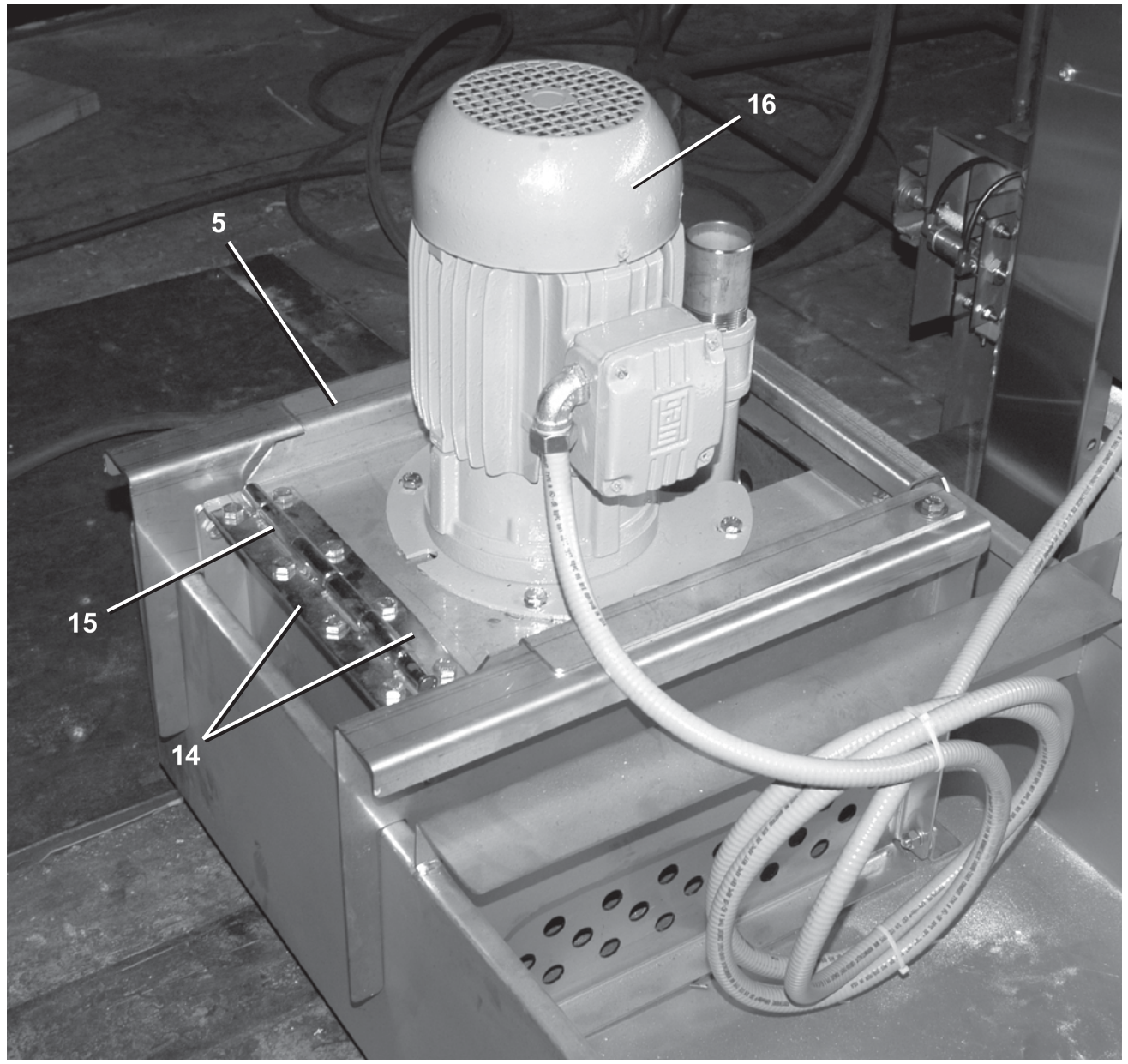

Parts List—Reuse Tanks

Find the correct assembly first, then find the needed components. The item letters (A, B, C, etc.) assigned to assemblies are referred to in the "Used In" column to identify which components belong to an assembly. The item numbers (1, 2, 3, etc.) assigned to components relate the parts list to the illustration.

Used In	Item	Part Number	Description	Comments
			----------ASSEMBLIES----------	
	A	ALC420175	SIDE TANK+PUMP LAYT-MP1603	MP1540, MP1556 MP1640, MP1656, MP1650
	B	ALC420172	SIDE TANK+PUMP LAYT-MP1A03	MP1A50
			----------COMPONENTS----------	
A	1	W4 23593	SIDE TANK NARROW	
B	1	W4 23638	MP1A03 SIDE TANK NARROW	
A	2	W4 23594	SIDE TANK WIDE WLDMNT	
B	2	W4 23640	MP1A03 SIDE TANK WIDE WLDMNT	
A	3	W4 23548	SIDE TANK COVER WLDMT	
B	3	W4 23643	MP1A03 SIDE TANK COVER WLDMT	
all	4	07 10495	BLANK PUMP STAND COVER	
A	5	ALC420171	REUSE PUMP STAND ASSEMBLY	
B	5	ALC420219	REUSE PUMP STAND ASSEMBLY	
all	6	60E312A11A	HOSE 5"ID X 11"LG GATES 75W	
all	7	27A086	HOSECLAMP 3+1/8-6"CADSCR#HS-88	
all	8	04 23474	CLEANOUT TANK LEG 4840M	
all	9	60E201	HOSE 2"ID W/S GATES#4686-0200	
all	10	27A072	T-BOLT HOSECLAMP2.16-2.47CADSC	
all	11	5SP3AP4SC	NPT PLUG 3" SQ SK40 PVC	
all	12	5SP1ADESC	NPT PLUG 1" SQ CORED GAL CI	
A	13	04 23629	SMALL SIDE TANK COVER	
B	13	04 23650	MP1A03 SMALL SIDE TANK COVER	
all	14	W4 23539	WLMT=HINGE PRESS TANK	
all	15	04 23540B	PIN=HINGEPUMP MOUNT	
all	16	27E940A96	2X1-6.35PUMP W/3HP TEFC MOTOR	
all	17	15K171	HEXCAPSCR 1/2-13UNC2X1+3/4 SS1	
all	18	15U310S	FLATWASH-SS .53 X 1.37 .187T	
all	19	15U310	LOKWASHER REGULAR 1/2 SS18-8	
all	20	15G231S	HXFINJAMNUT 1/2-13UNC2B SS18-8	
all	21	15A020S	CARBOLT 3/8-16X1" SS18-8	
all	22	15U245	FLTWASH 3/8 STD COMM 18-8 SS	
all	23	15U260	LOCKWASHER MEDIUM 3/8 SS18-8	
all	24	15G206	HEXNUT 3/8-16 UNC2 SS 18-8	

Hydraulic Piping and Assemblies

2

Hydraulic Schematic Single Manifold Presses without Booster Pump

MP1540, MP1640, MP1650

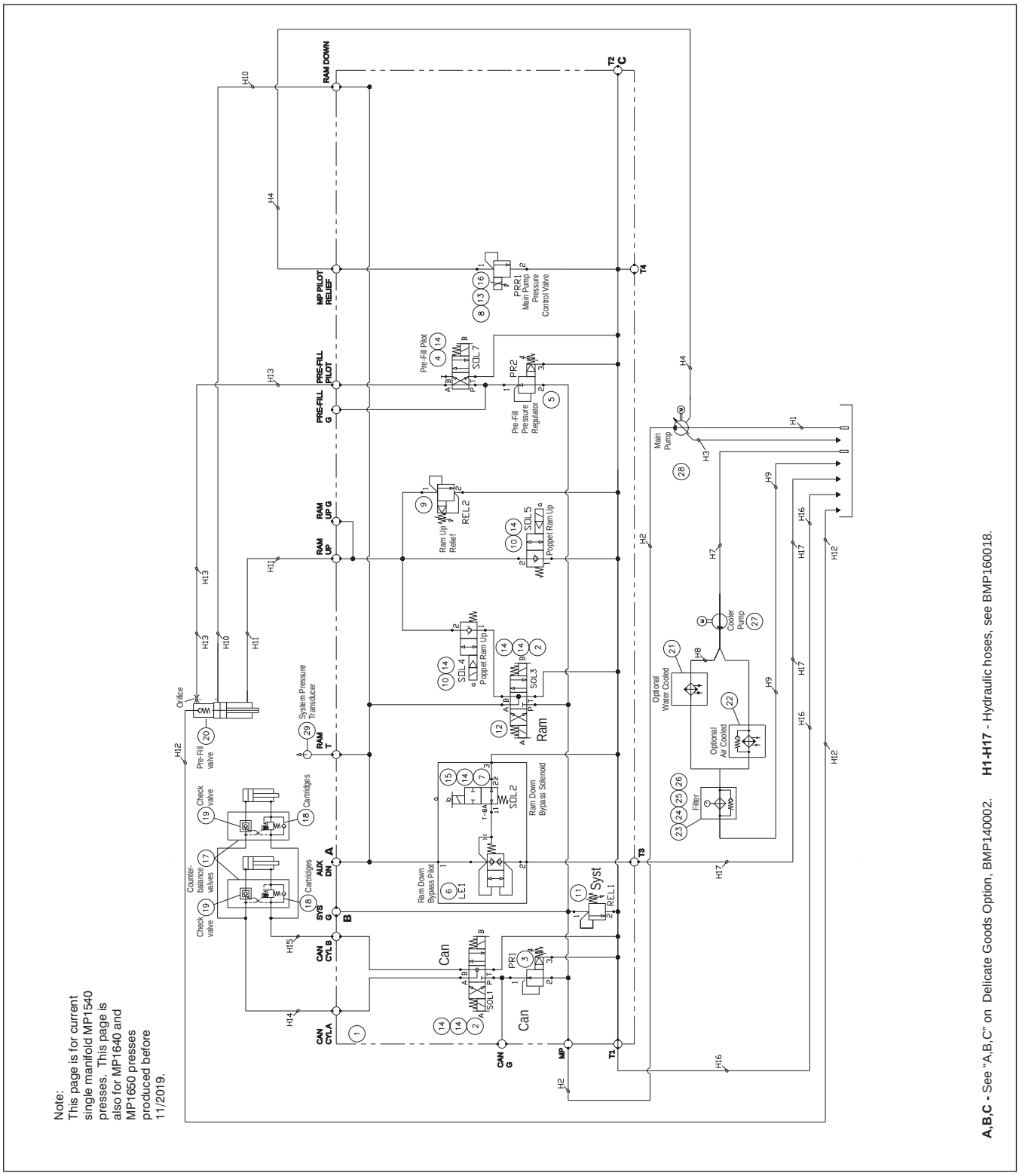

Note:
This page is for current single manifold MP1540 presses. This page is also for MP1640 and MP1650 presses produced before 11/2019.

A,B,C - See "A,B,C" on Delicate Goods Option, BMP140002. **H1-H17** - Hydraulic hoses, see BMP160018.

Hydraulic Schematic Single Manifold Presses without Booster Pump

MP1540, MP1640, MP1650

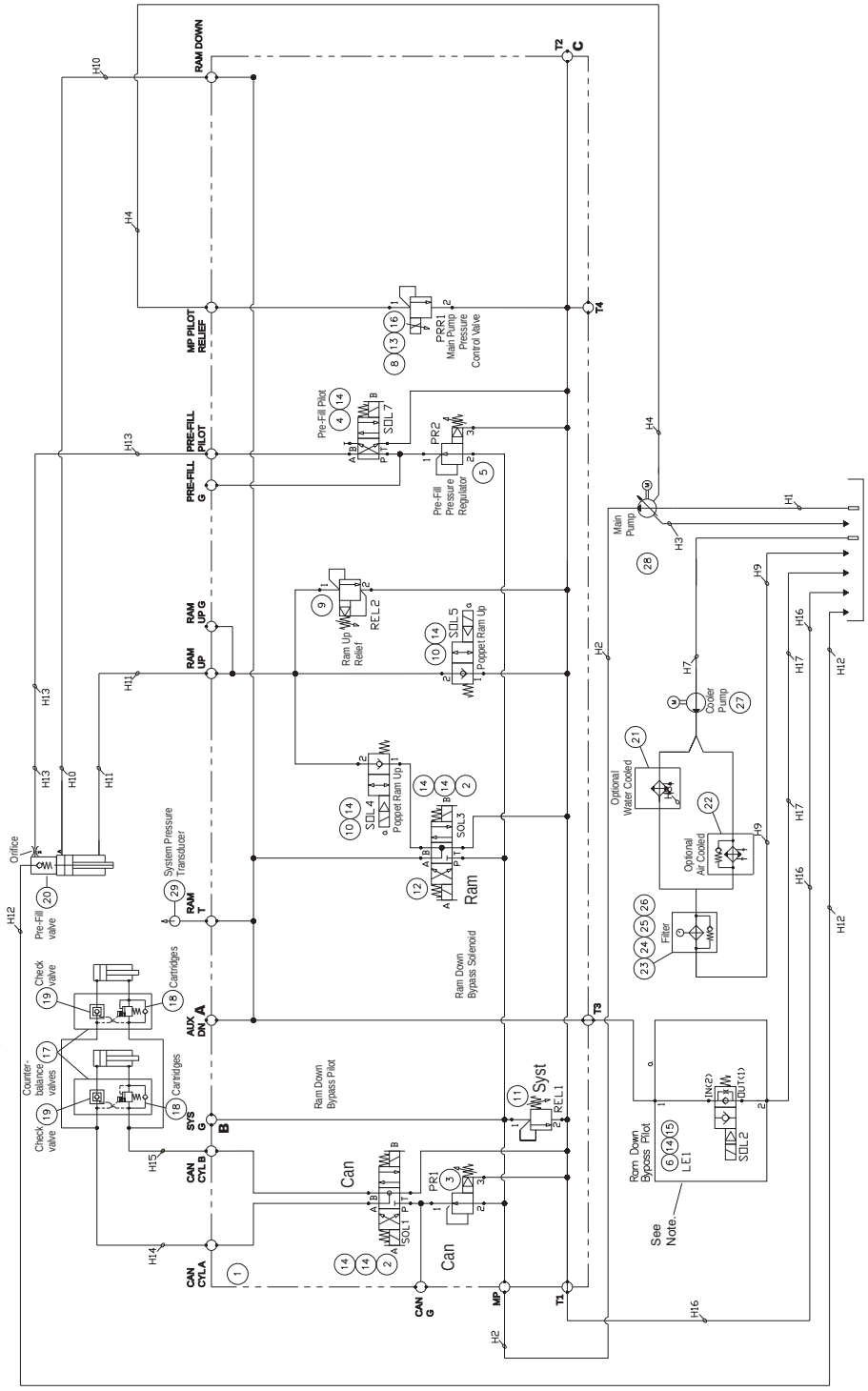

Note:
This page is for single manifold presses MP1540 , and MP1550 and MP1650 (presses produced before 11/2019) retrofitted with Larger Ram Down Bypass Valves. Items 6,14,15 are mounted on an additional body.

A,B,C - See "A,B,C" on Delicate Goods Option, BMP140002. **H1-H17** - Hydraulic hoses, see BMP160018.

Hydraulic Schematic Single Manifold Presses without Booster Pump

MP1540, MP1640, MP1650

Parts List

Find the correct assembly first, then find the needed components. The item letters (A, B, C, etc.) assigned to assemblies are referred to in the "Used In" column to identify which components belong to an assembly. The item numbers (1, 2, 3, etc.) assigned to components relate the parts list to the illustration.

Used In	Item	Part Number	Description	Comments
			ASSEMBLIES	
	A	AHT10053D	MAIN MANIFOLD ASSY/NON BOOSTER-96DH463	MP1540 (CURRENT), MP1640 & MP1650 (BEFORE 11/2019) SEE NOTE PAGES 1 & 2.
	BA	AHT10074	BYPASS 2-WAY VALVE-24VDC ASSY	24VDC MODELS RETROFITTED TO LARGER BYPASS VALVE, SEE PAGE 2.
	BB	AHT10074A	BYPASS 2-WAY VALVE-115VAC ASSY	115VAC MODELS RETROFITTED TO LARGER BYPASS VALVE, SEE PAGE 2
			COMPONENTS	
all	1	96DH463	MAIN MANIFOLD NON-BOOSTER SUN#FV-11338-V1	
all	2	96RH709E37	DIRECT.VALVE CENTER OP 24VDC D05	
all	3	96DH475A	CARTRIDGE,PRESS.REDUCING VALVE SUN#PBFB-LWN	
all	4	96RH712A02	DIRECTIONAL PILOT VALVE+SOL 24VDC	
all	5	96DH430C	CARTRIDGE, SUN #PBDB-LAN	
A	6	96RH713A01	SUN CARTRIDGE#L0DA-8DN	SHOWN PAGE 1
BA,BB	6	96RH713S01V	PARKER 2 WAY VALVE: DSH161N	SHOWN PAGE 2
A	7	96RH713A02	SPOOL SOL.VALVE 2POS 2WAY-DAAA-MHN	
all	8	96RH708E39	PROPORTIONAL VALVE SUN #RBAP-XWN	
all	9	96DH452A04	RELIEFVAL 300-3000PSI PARKER#RAH161S30	
all	10	96DH452A01	POPPET=COIL + CARTRIDGE	
all	11	96DH440S	RELIEFVAL CARTRIDGE RDHA-LCN	
all	12	96DH485A	DAMAN ADAPTOR #DD05D08VAAB	
all	13	12M4240V9F	SOLE.CONN. 240VAC/DC 5M 4 WIRE	
A	14	12M348V3F	SOLE.CONN.24VDC/VAC 2M	SHOWN PAGE 1
BA	14	96RH713S01C1	COIL: CAP 024D 24VDC	SHOWN PAGE 2
BB	14	96RH713S01C2	COIL: 115VAC #CAP115D	SHOWN PAGE 2
all	15	12M324V9F	SOLENOID 24VDC SUN 760-224	
all	16	96RH713R03	COIL 24VDC SUN 790-2B24V	
all	17	96DH471	COUNTERBALANCE VALVE-SUN BODY #YEJ	
all	18	96DH471A	CARTRIDGE-COUNTERBAL.SUN #CBCA-LHN	
all	19	96DH410	CART., SUN CHECKVALVE CKCB-XCN	
all	20	96RH712F	PREFILL VALVE HAWE #F100-45	
all	21	27H11205	SSPRESS HEAT EXCHANGER THERMAL TRANSFER BPS-24-12X5	
all	22	27HS091AAU	OIL COOLER 8HP@15GPM 50/60	
all	22	27HS092AAU	OIL COOLER 20HP@10GPM 50/60	
all	22	27HS091A98	OIL COOLER 8HP@15GPM 575V	
all	22	27HS092A98	OIL COOLER 20HP@10GPM 575V	
all	23	27E7112	INTANK RETURN FILTER 1+1/4"	
all	24	27E7112B	FILTER ELEMENT-REPLACEMENT 10 MICRON	

Hydraulic Schematic Single Manifold Presses without Booster Pump

MP1540, MP1640, MP1650

Parts List

Find the correct assembly first, then find the needed components. The item letters (A, B, C, etc.) assigned to assemblies are referred to in the "Used In" column to identify which components belong to an assembly. The item numbers (1, 2, 3, etc.) assigned to components relate the parts list to the illustration.

Used In	Item	Part Number	Description	Comments
all	25	27E7112A	FILTER GAUGE-DONALDSON#P171956	
all	26	27E7112C	ELEC.INDICAT-DONALDSON#P171966	
all	27	27E5506	GEAR PUMP-RECIRC.PUMP-HONOR MODEL#2GG1U22R	
all	28	27E550466	PISTON PUMP 45CC	MP1540
all	28	27E550566	PISTON PUMP 80CC	
all	28	27E550766	PISTON PUMP 112CC	
all	29	09N700B	TRANSDUCER WIKA C-10 0-5000 PSI	

Larger Bypass Valve and Retrofit

MP1540, MP1556, MP1640, MP1650, MP1656, MP1A50
MPL550, MPL556, MPL640, MPL650, MPL656

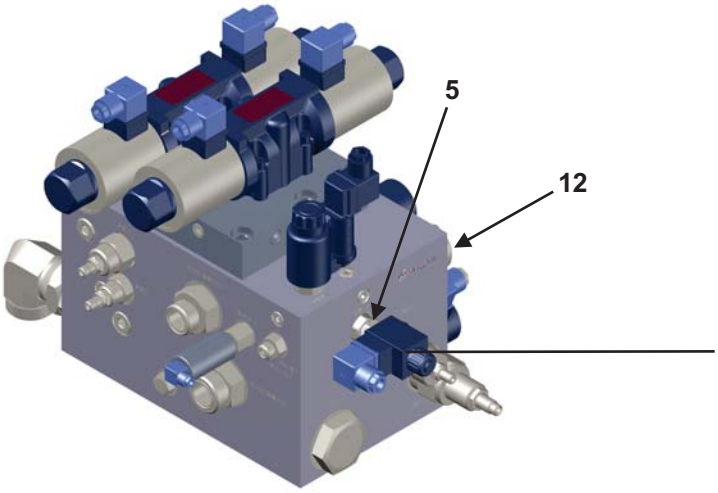

(For Presses produced between 11/2020 and 1/30/2021)

SOL2
Ram Down Bypass Pilot & Solenoid (Remove valve and replace with plug. Add larger bypass valve as shown below.)

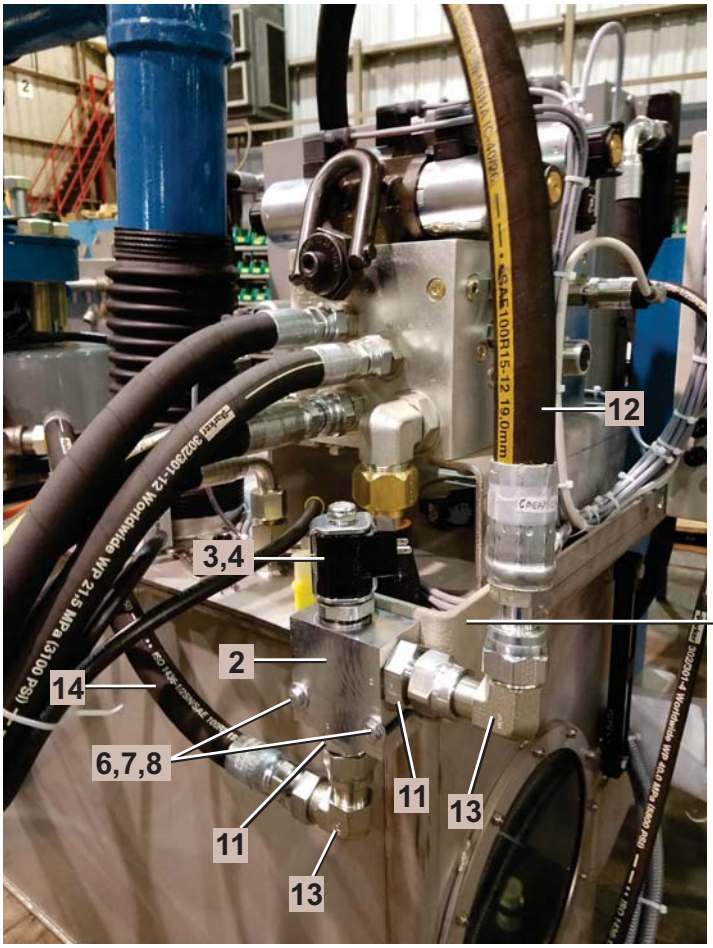

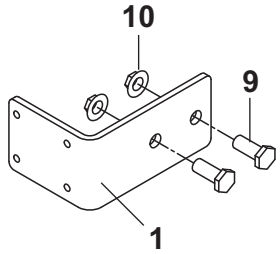

SOL2 Larger Ram Down Bypass Valve Assembly and Retrofit

Larger Bypass Valve and Retrofit

MP1540, MP1556, MP1640, MP1650, MP1656, MP1A50
MPL550, MPL556, MPL640, MPL650, MPL656

Parts List

Find the correct assembly first, then find the needed components. The item letters (A, B, C, etc.) assigned to assemblies are referred to in the "Used In" column to identify which components belong to an assembly. The item numbers (1, 2, 3, etc.) assigned to components relate the parts list to the illustration.

Used In	Item	Part Number	Description	Comments
			ASSEMBLIES	
	A	AHT10074	BYPASS 2-WAY VALVE-24VDC ASSY	24VDC
	B	AHT10074A	BYPASS 2-WAY VALVE-115VAC ASSY	115VAC
	C	96DH463	MAIN MANIFOLD NON-BOOSTER SUN#FV-11338-V1	THIS BYPASS IS FOR SINGLE PUMP PRESSES BUILT BETWEEN 11/2020 & 1/31/21, USING THIS MANIFOLD
			COMPONENTS	
all	1	07 10853	BYPASS MANIFOLD BRKT	
all	2	96RH713S01B	BODY: B16-2-16T	
all	3	96RH713S01V	PARKER 2 WAY VALVE : DSH161N	
A	4	96RH713S01C1	COIL: CAP024D 24VDC	
B	4	96RH713S01C2	COIL: 115VAC #CAP115D	
all	5	96RH713S01P	SUN CAVITY PLUG: XEOAXXN	
all	6	15K047	HXCAPSCR 1/4-20UNCX2+1/2 ZINC	
all	7	15U185	FLATWASHER(USS STD) 1/4" ZNC P	
all	8	15G178	1/4"-20 HEXFLANGE NUT ZINC	
all	9	15K151	HXCAPSCR 1/2-13UNC2AX1.25 GR5	
all	10	15G222B	HEXFLGNUT 1/2-13 ZINC SERRATED	
all	11	52ZC00S004	TUBESTRCON3/4X1"OR#12-16 F5OLO-S	
all	12	60EH51C36A	ASSY=HI-PRESSURE HOSE 3/4"X36"LG	
all	13	52ZJ00S006	TUBEFIT90EL3/4"#12 C6LO-S	
all	14	60EH50C20A	3/4"90FJICSWXSTRFEMORSW=20"	

Hydraulic Hoses - Single Manifold Presses without Booster Pump

MP1540, MP1640

Figure 1: Hoses Overview

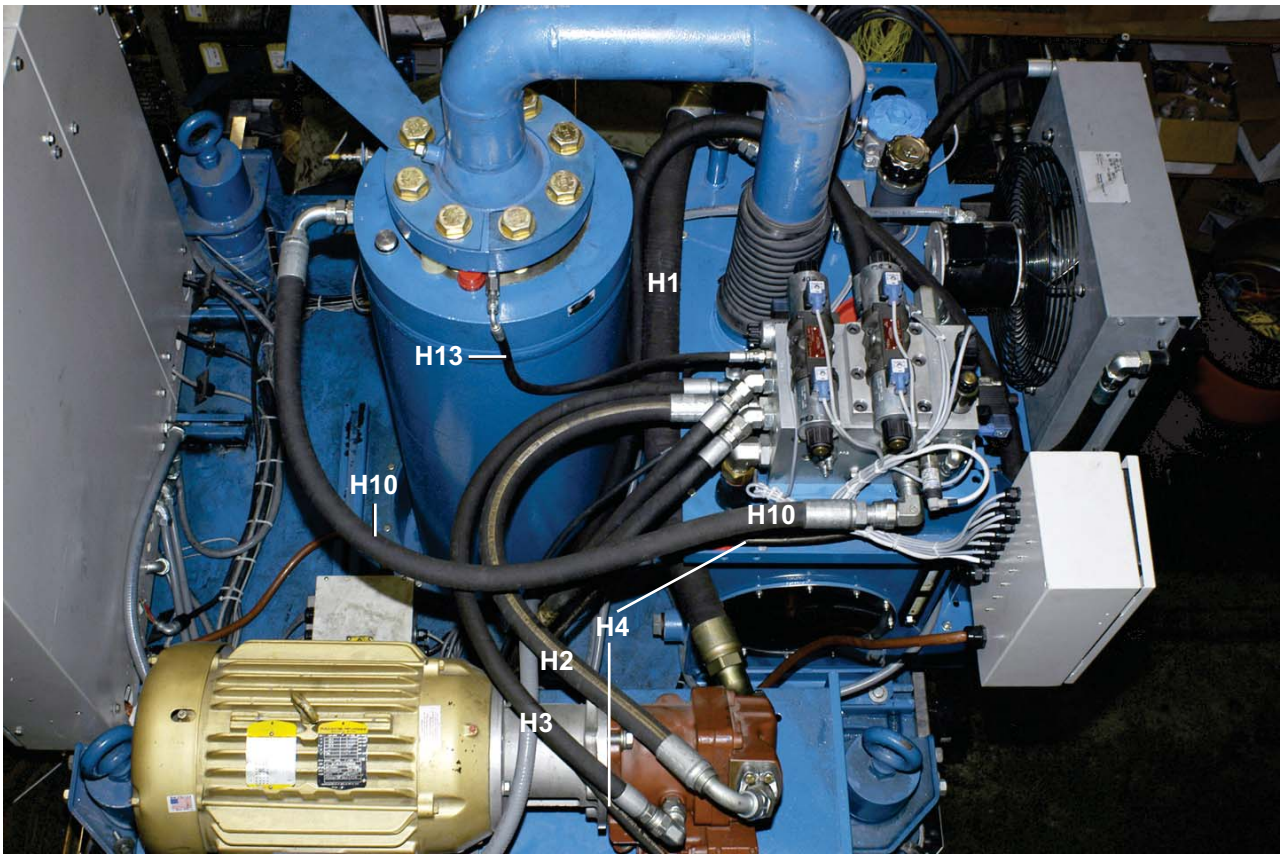

Note: This drawing is for single manifold presses MP1540 from 04/2016 to present, and MP1640 presses produced between 04/2016 and 11/2019. For MP1640 with single manifold and single pump, see MAPMPX40CE.

Hoses:

H1 - From tank to pressure pump - 2”x46”(CL/CR)or 2”x66”(L/R)
H2 - From main pump to manifold [MP1] - 1”x36”
H3 - From main pump to tank - 3/4”x46”
H4 - From main pump to manifold, main pump pilot relief [MPPR] - 1/4”x65”(L/R)

H7 - From tank to cooler pump- 1”x87”
H8 - From cooler pump to cooler(water cooled), 3/4”x 60”
H9 - From cooler to in-tank return filter - 3/4”x19”
H10- From manifold [RD], ram down, to pre-fill valve, 1”X60”
H11- From manifold [RU] to bottom of ram, ram up, 1”X44”
H12 - From ram to tank, 1/4”x78”
H13 - From manifold [PFP] to pre-fill pilot, 1/4”x40”
H14 - From manifold [CAN A] to Can Up, 3/4”X60”(Pre 2019) or 3/4”X66” (After 2019)
H15 - From manifold [CAN B] to Can Down, 3/4”x60” (Pre 2019) or 3/4”X66” (After 2019)
H16 - From manifold [T1] to tank, 2”x1.25”
H17 - From manifold [T3] to tank, 3/4”x20”

Hydraulic Hoses - Single Manifold Presses without Booster Pump

MP1540, MP1640

Figure 2: Hoses to manifold and tank

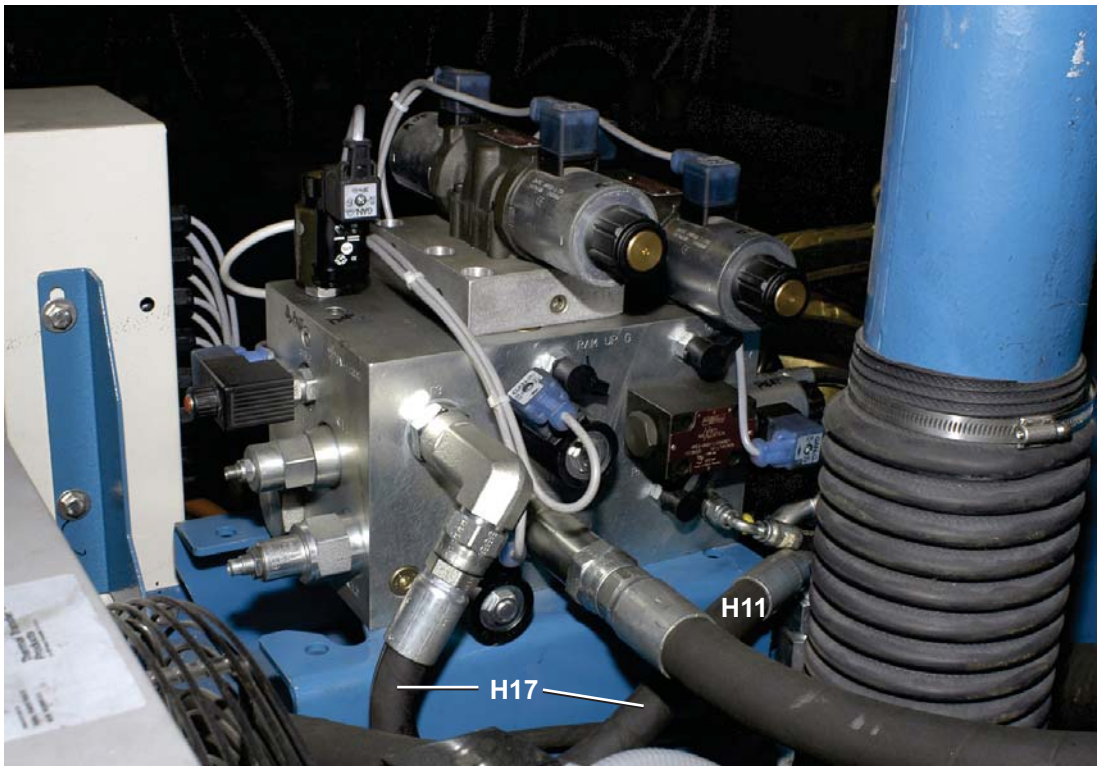

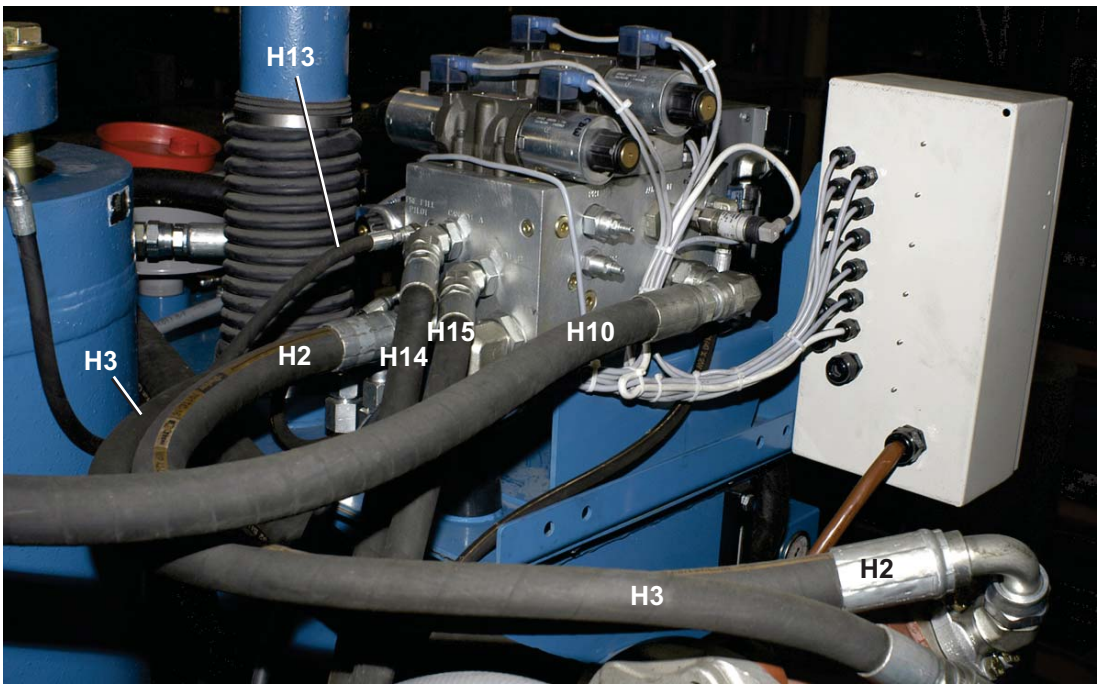

Hydraulic Hoses - Single Manifold Presses without Booster Pump

MP1540, MP1640

Figure 3: Hoses to manifold and tank

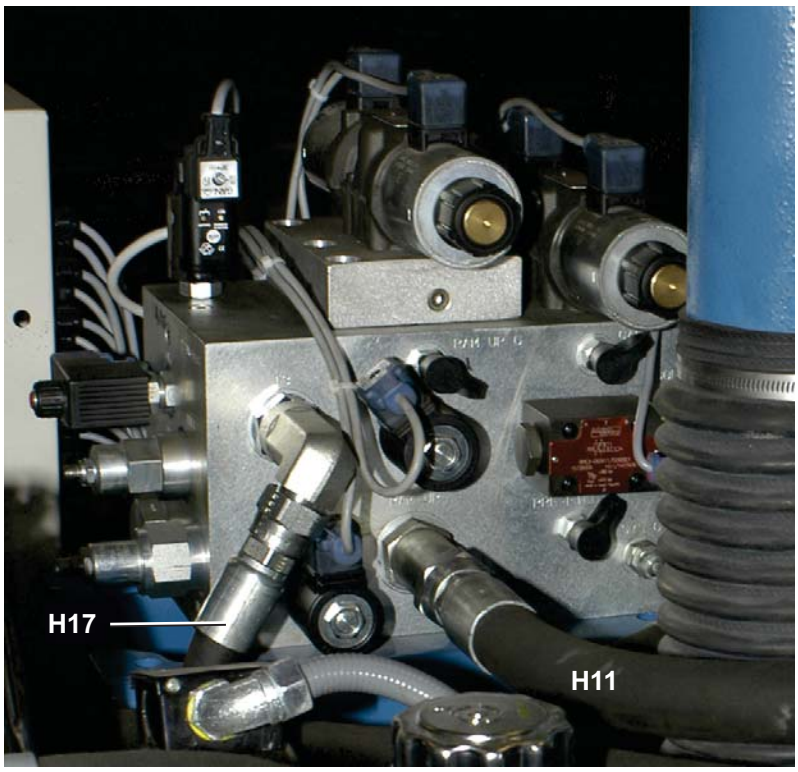

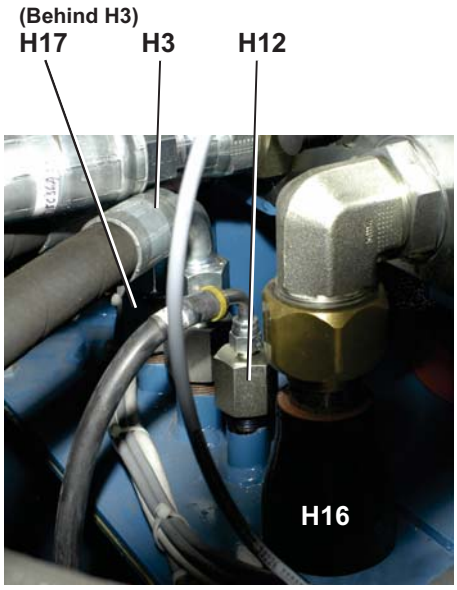

View A-A: Hoses to tank

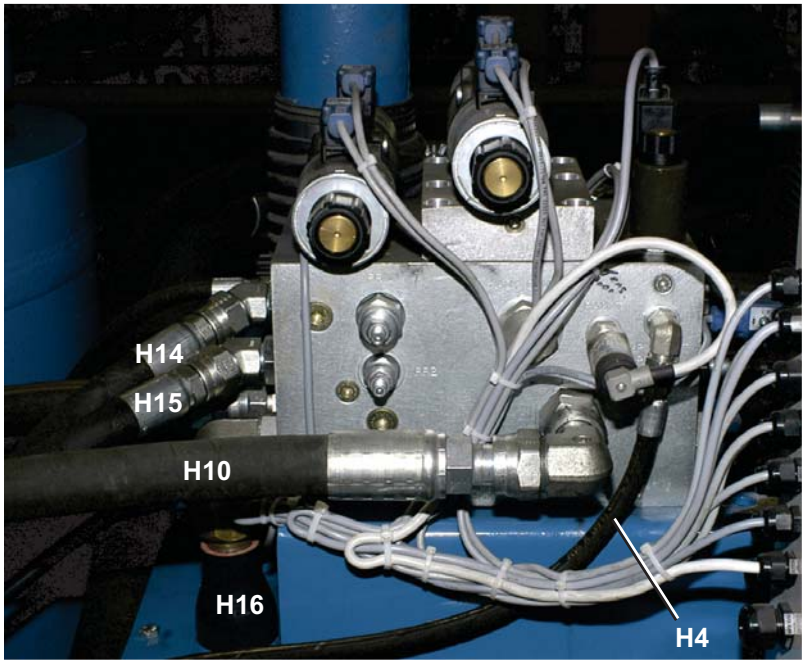

Hydraulic Hoses - Single Manifold Presses without Booster Pump

MP1540, MP1640

Figure 4: Main Pump Hoses

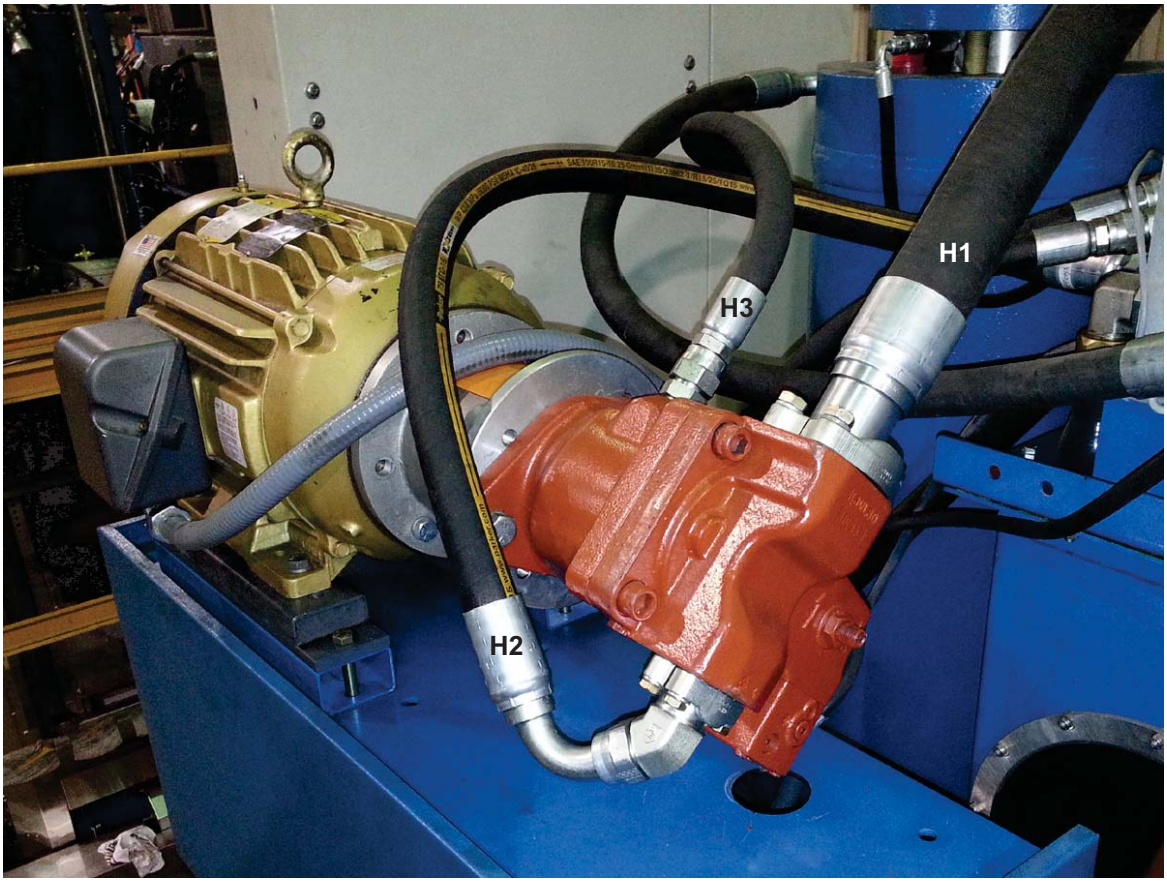

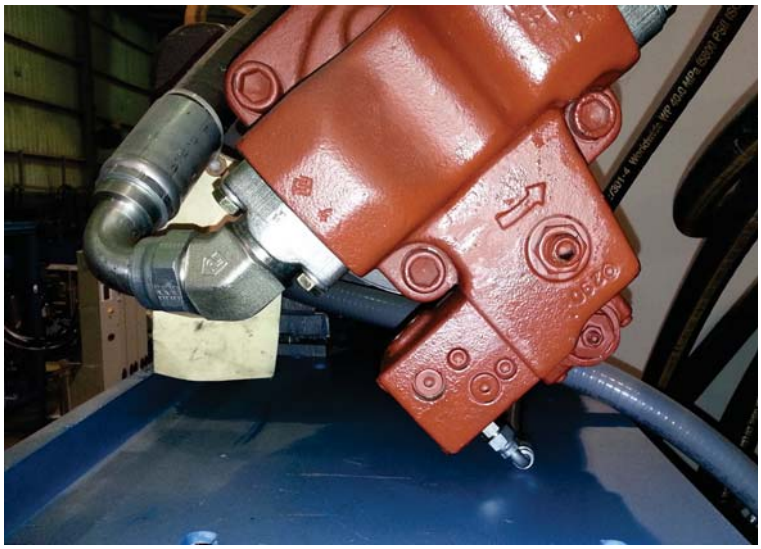

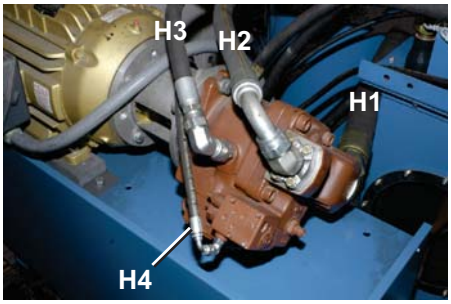

Alternate pump position

Hydraulic Hoses - Single Manifold Presses without Booster Pump

MP1540, MP1640

Figure 5: Top view- Coolers and hoses to manifold and tank

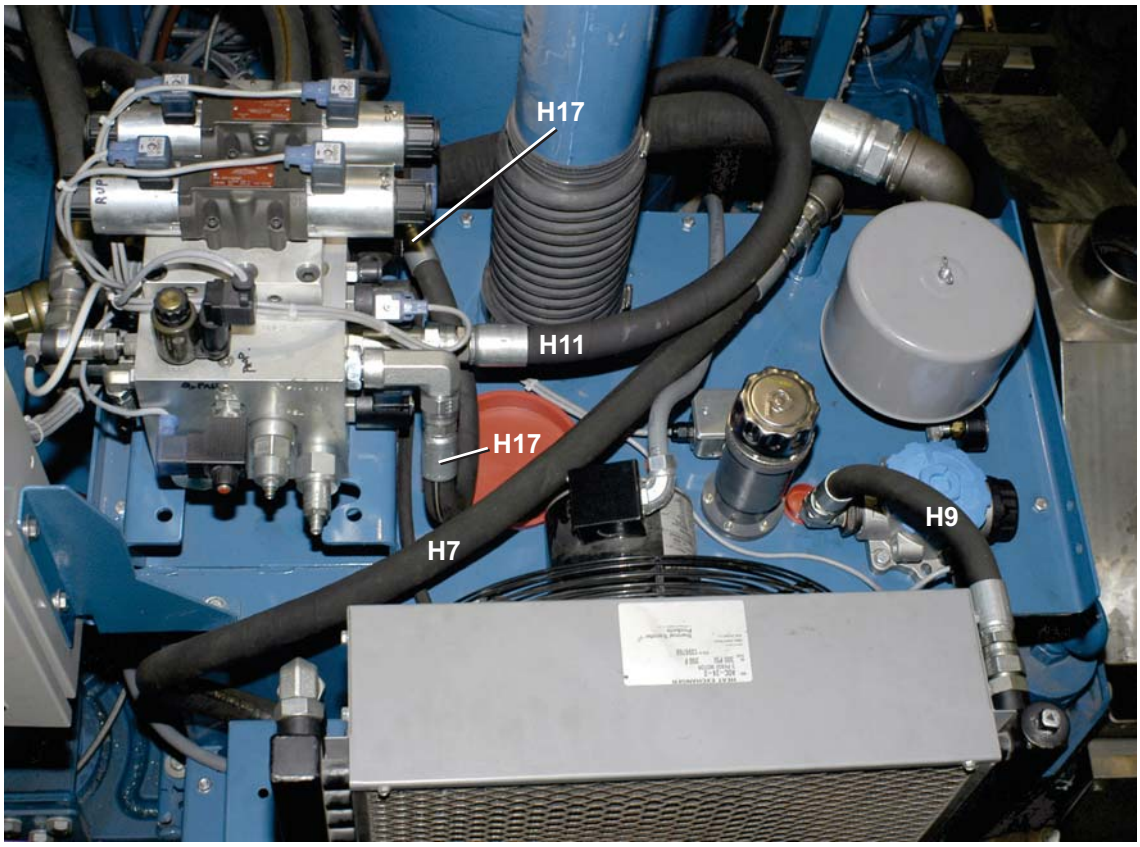

Figure 6: Cooler Pump Hoses

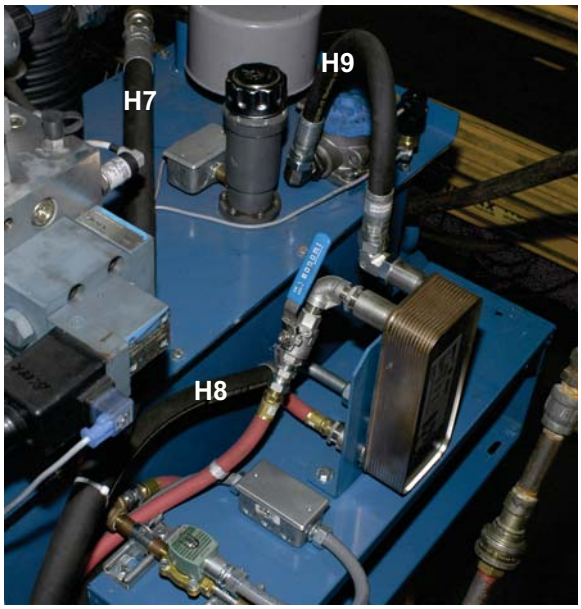

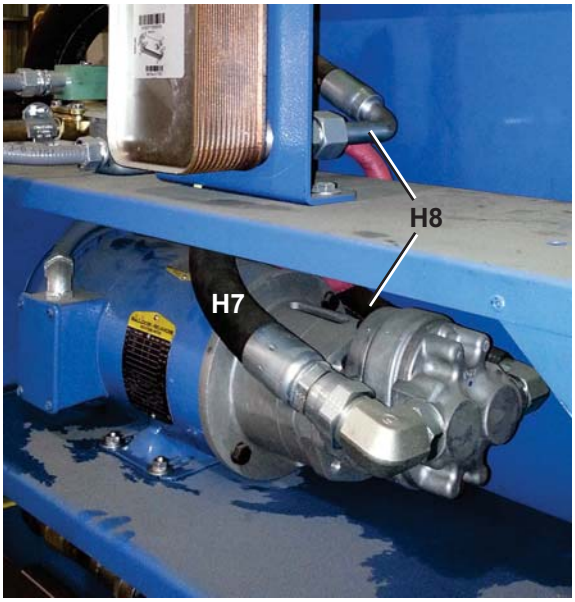

Hydraulic Hoses - Single Manifold Presses without Booster Pump

MP1540, MP1640

Figure 7: Ram and Can Hoses

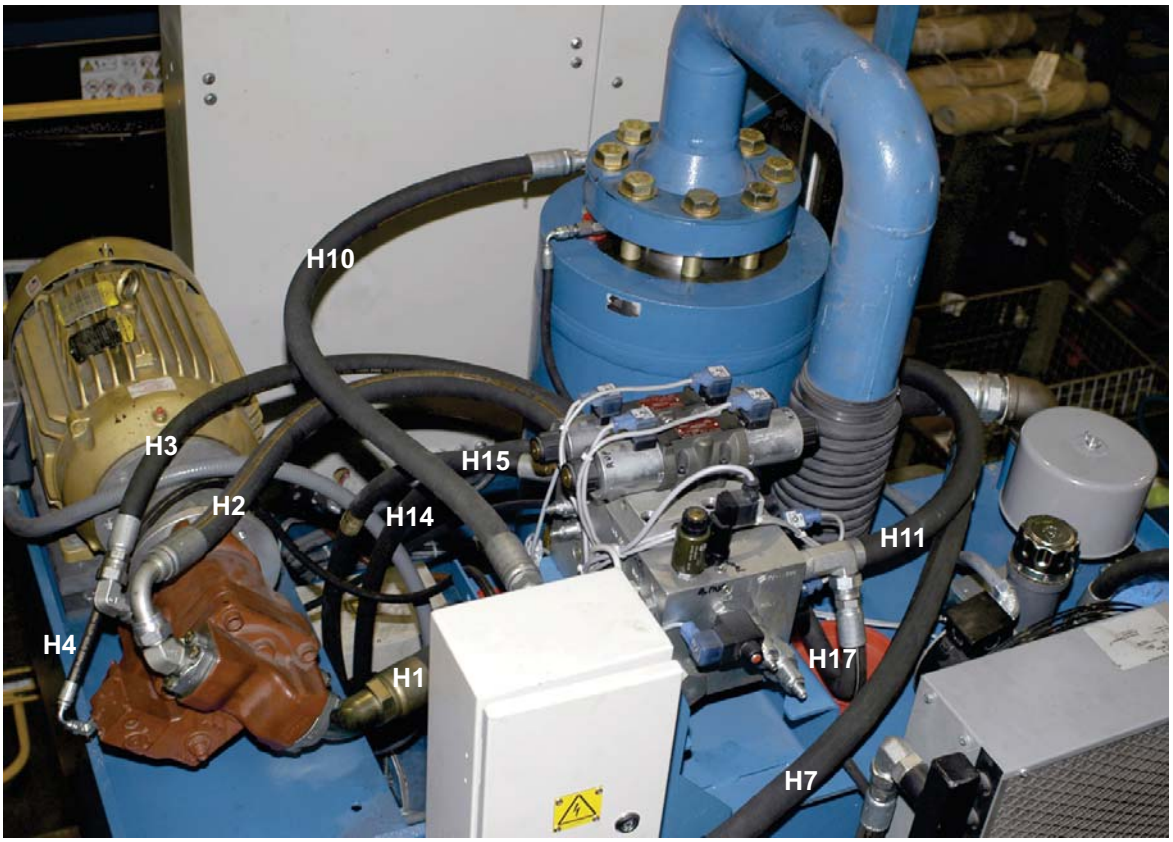

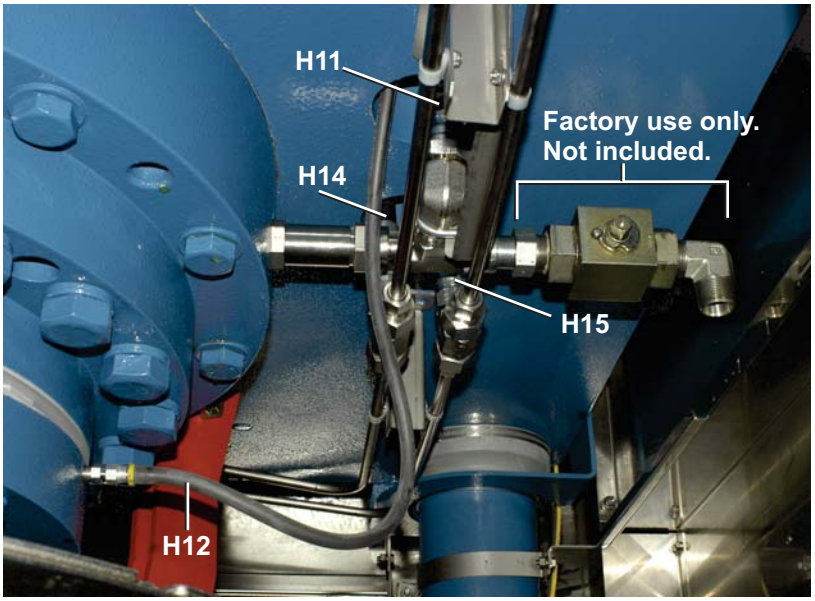

Hydraulic Hoses - Single Manifold Presses without Booster Pump

MP1540, MP1640

Parts List—Hydraulic Hoses

Find the correct assembly first, then find the needed components. The item letters (A, B, C, etc.) assigned to assemblies are referred to in the "Used In" column to identify which components belong to an assembly. The item numbers (1, 2, 3, etc.) assigned to components relate the parts list to the illustration.

Used In	Item	Part Number	Description	Comments
			ASSEMBLIES	
	A	AHT10032J	HYD TANK ASSY-1540 NON/BOOSTER PUMP	REFERENCE
			COMPONENTS	
A B	H1 H1	60EH95C66A 60EH95C46A	HYDHOSE 2"STRFEMSWJICXSTRCD61 HYD.HOSE 2"STRFEMSWXSTRCODE61	MP1540L/R, MP1640L/R MP1556CL/CR & MP1640CL/CR
all	H2	60EH75C36A	ASSY=HYDRAULIC HOSE 1"X36"LG	
all	H3	60EH50C46A	HYDHOSE 3/4"90FJICSWXSTRFEMORSW=46"	
all	H4	60EH21C65A	HYDHOSE 1/4"STRFEMORSWX90FEMORSW=65"	
all	H7	60EH80C87	ASSY=HYD HOSE 2STR.FORSW 1"X87"LG	
all	H8	60EH50C60A	HYD.HOSE 3/4"+90FSWXFORSW=60"	
all	H9	60EH50C19A	HYD HOSE 2-STRFEMSW 3/4"X19"LG	
all	H10	60EH75C60A	ASSY=HYDRAULIC HOSE 1"X60"LG	
all	H11	60EH75C44A	ASSY=HYDRAULIC HOSE 1"X44"LG	
all	H12	60E076B078	HOSE ASSY 1/4"X78"LG+ENDS	
all	H13	60EH21C40A	ASSY=HYDRAULIC HOSE 1/4 X40LG	
A B	H14 H14	60EH50C60B 60EH50C66A	HYD HOSE 2-STRFEMSW 3/4"X60"LG HYD HOSE 2-STRFEMSW 3/4"X66"LG	Before 2019 After 2019 Unifed Skid Hydraulics
A B	H15 H15	60EH50C60B 60EH50C66A	HYD HOSE 2-STRFEMSW 3/4"X60"LG HYD HOSE 2-STRFEMSW 3/4"X66"LG	Before 2019 After 2019 Unifed Skid Hydraulics
all	H16	60E022	HOSE REDUCER 2"X1.25" 5-PLY SILICONE	
all	H17	60EH50C20A	3/4"90FJICSWXSTRFEMORSW=20"	

Single Manifold and Valves without Booster Pump

MP1540, MP1640

Figure 1: Valves and Settings

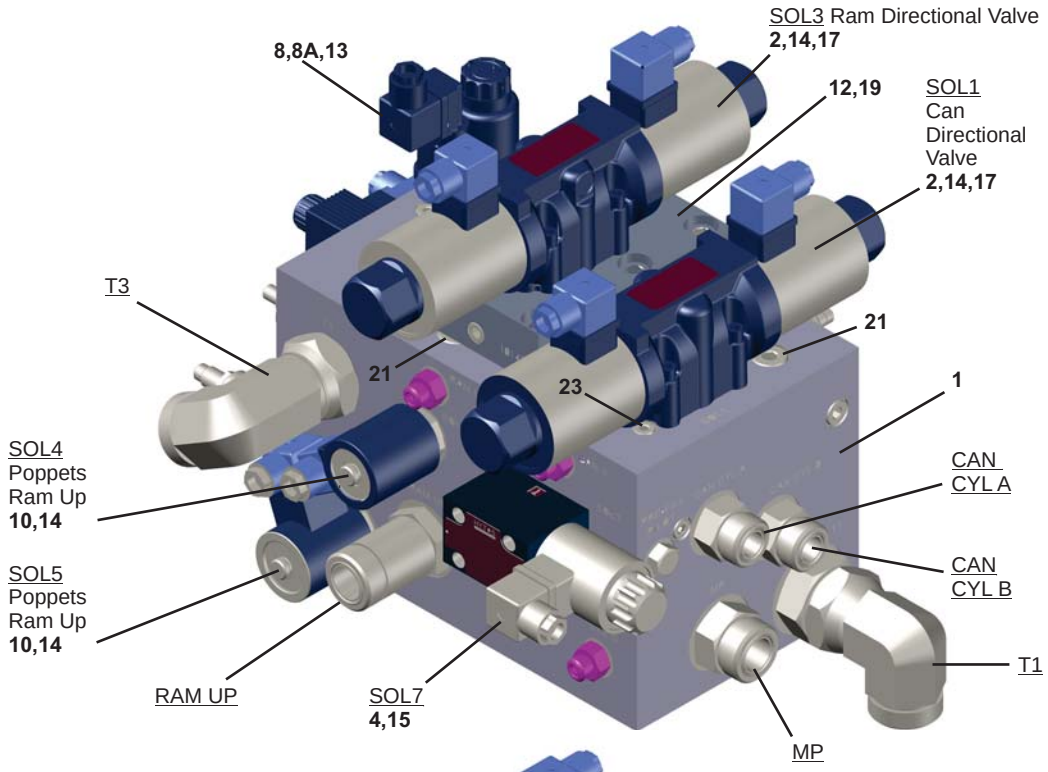

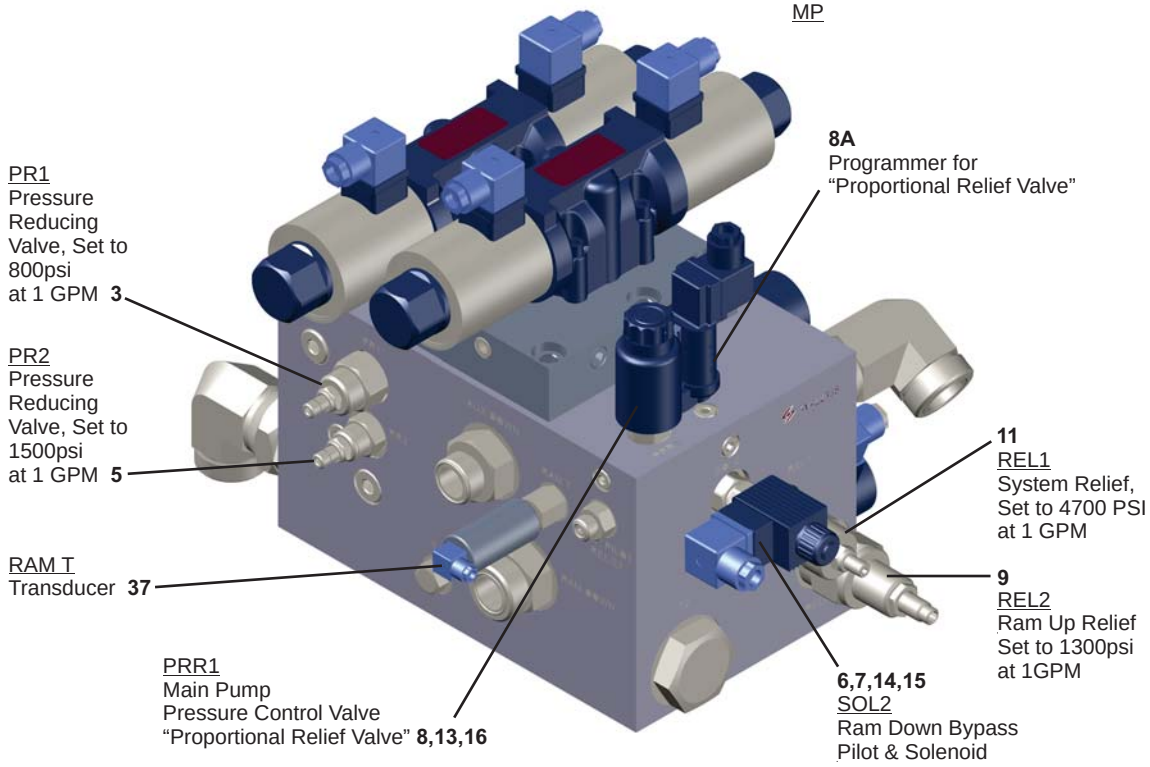

Single Manifold and Valves without Booster Pump

MP1540, MP1640

Figure 2: Proportional Relief Valve Settings

Programmer for Proportional Relief Valve - Settings:

Mode	1	Units
Minimum Input	0.2	Volts
Maximum Input	10	Volts
Minimum Output	5	mA
Maximum Output	590	mA
Dither Frequency	140	Hz
Ramp Up	0	Sec
Ramp Down	0	Sec

NOTE:
Values given are the default values. You should not have to program a new proportional valve if you replace it.

Figure 3: Hardware, Plugs, and Fittings

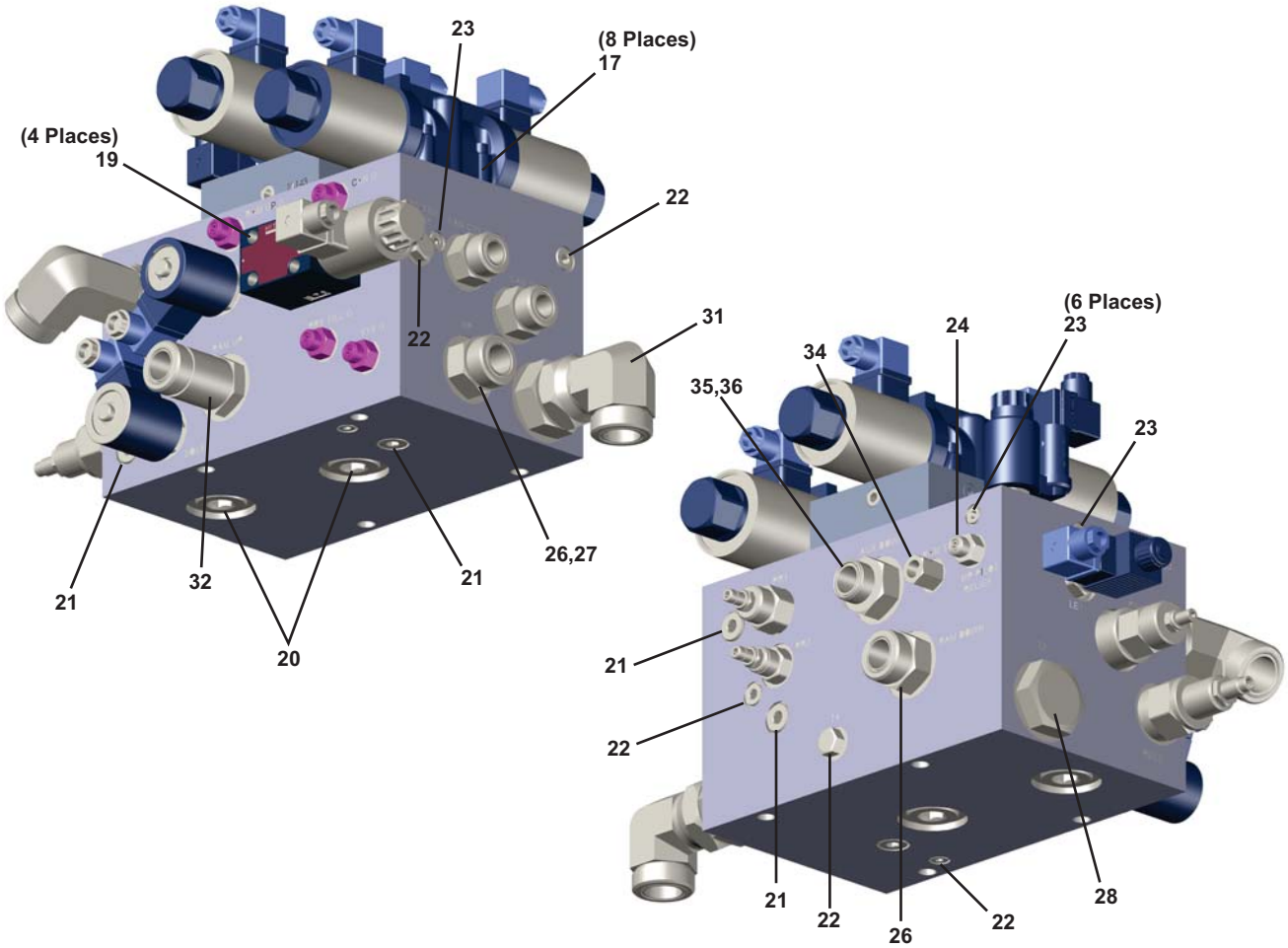

Single Manifold and Valves without Booster Pump

MP1540, MP1640

Figure 4: Hardware, Plugs and Fittings- continued

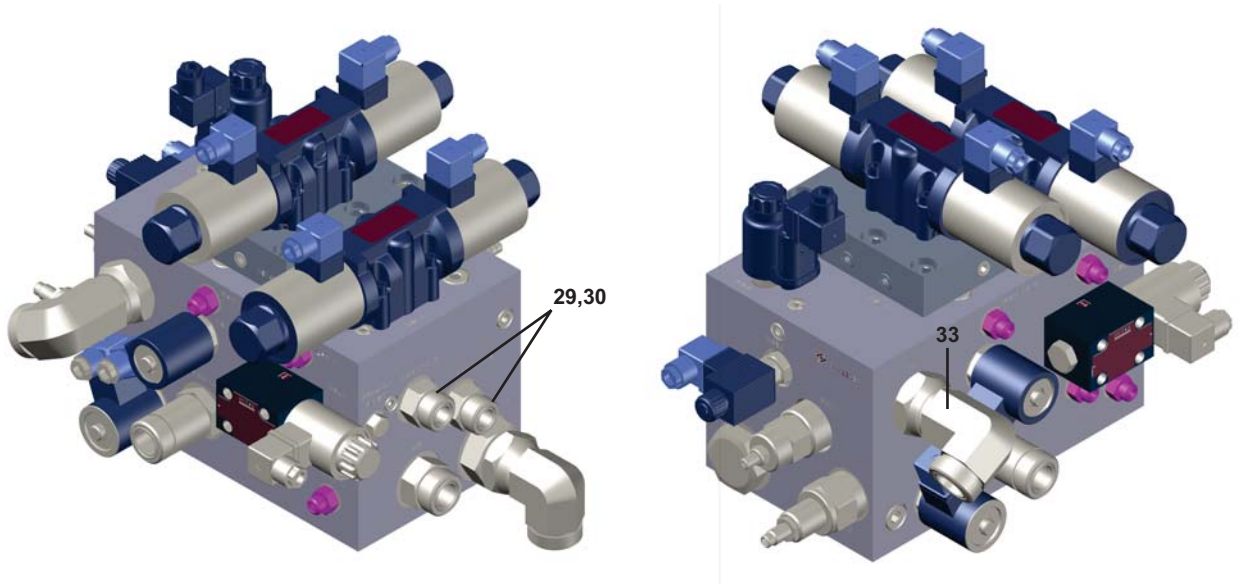

Figure 5: Pressure Gauge Ports

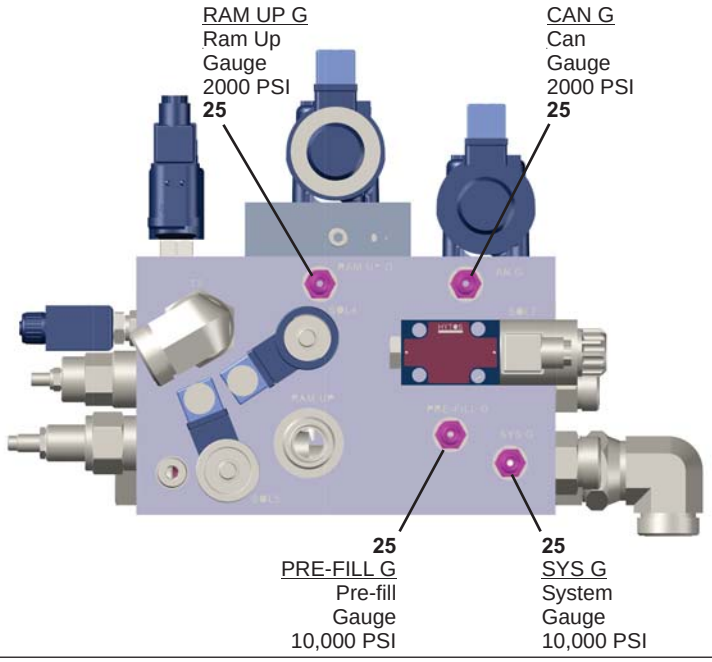

Single Manifold and Valves without Booster Pump

MP1540, MP1640

Parts List—Single Manifold and Valves without Booster Pump

Find the correct assembly first, then find the needed components. The item letters (A, B, C, etc.) assigned to assemblies are referred to in the "Used In" column to identify which components belong to an assembly. The item numbers (1, 2, 3, etc.) assigned to components relate the parts list to the illustration.

Used In	Item	Part Number	Description	Comments
			ASSEMBLIES	
	A	AHT10053D	MAIN MANIFOLD ASSY/NON BOOSTER-96DH463	
			COMPONENTS	
all	1	96DH463	MAIN MANIFOLD NON-BOOSTER SUN#FV-11338-V1	
all	2	96RH709E37	DIRECT.VALVE CENTER OP 24VDC D05	
all	3	96DH475A	CARTRIDGE,PRESS.REDUCING VALVE SUN#PBFB-LWN	
all	4	96RH712A02	DIRECTIONAL PILOT VALVE+SOL 24VDC	
all	5	96DH430C	CARTRIDGE, SUN #PBDB-LAN	
all	6	96RH713A01	SUN CARTRIDGE#L0DA-8DN	
all	7	96RH713A02	SPOOL SOL.VALVE 2POS 2WAY-DAAA-MHN	
all	8	96RH708E39	PROPORTIONAL VALVE SUN #RBAP-XWN	
all	8	96RH708E39P	PROGRAMMER-SUN FOR 96RH708E39	
all	9	96DH452A04	RELIEFVAL 300-3000PSI PARKER#RAH161S30	
all	10	96DH452A01	POPPET=COIL + CARTRIDGE	
all	11	96DH440S	RELIEFVAL CARTRIDGE RDHA-LCN	
all	12	96DH485A	DAMAN ADAPTOR #DD05D08VAAB	
all	13	12M4240V9F	SOLE.CONN. 240VAC/DC 5M 4 WIRE	
all	14	12M348V3F	SOLE.CONN.24VDC/VAC 2M	
all	15	12M324V9F	SOLENOID 24VDC SUN 760-224	
all	16	96RH713R03	COIL 24VDC SUN 790-2B24V	
all	17	15K045C	SKCPSCR 1/4-20 UNCX1+3/4 BLK	
all	19	15K022C	SOKCPSCR 10-24UNC X 1-3/4" BLK	
all	20	52PY1AR001	HEX PLUG 1"OR #6408-16-0	
all	21	52PY0KR001	HEXPLUG 1/2"OR #6408-08-0	
all	22	52PY0GR002	HEXPLUG 3/8"XOR#6-P50N-SS	
all	23	52PY0LR001	HEXPLUG 1/4"ORING#4-P50N-S	
all	24	52ZC0ES003	TUBEFITSTR1/4X3/8#4-6 F5OLO-S	
all	25	52XY0KP001	TESTPORT QUICKCONN-MALE #Pd361	
all	26	52ZC00S008	TUBEFITSTRTHDCON 1"#16 F5OLO-S	
all	27	52JY1AR014	EL45COD61FLGSEALOK1"#16-LOVQ1S	
all	28	52PY0GR004	HEXPLUG 1-1/4" OR-SEAL #20 P5ON-S	
all	29	52ZC00S003	TUBEFIT STRTHDCN3/4"#12 F5OLO-S	
all	30	52ZJ00S005	TUBFITTSTRTHD45ELFC#12 V5OLO-S	
all	31	52ZJ1ES003	1.25 TUBEFIT90JIC #20 C50X-S	
all	32	52ZC1AS002	TUBEFITLGSTRTHDCON 1"#16 FF5OLO-S	
all	33	52ZJ00S026	TUBEFIT3/4"90LGELFC#12 C5OLO-S	
all	34	52AY0ER019	STRMALESAEXFNPT #6-1/4 F50G-SS	
all	35	52ZC1AS006	TUBEFITSTR1X3/4#16-12 F5OLO-S	
all	36	52JY0PR014	EL90FEMORSW3/4"#1J943-12-12	
all	37	09N700B	TRANSDUCER WIKA C-10 0-5000 PSI	

Pressure Gauges

MP1540, MP1556, MP1640, MP1650, MP1656
MPL556, MPL640, MPL650, MPL656

CAUTION: Damage hazard — High pressure will destroy the low pressure gauge.

- Do not connect the 2,000 PSI (138 Bar) gauge to a 10,000 PSI (689 Bar) port.

Pressure gauge assemblies:

Pressure gauges are not mounted on the machine. The gauges are shipped with the machine for use in servicing as needed. Each gauge assembly includes: gauge, hose, fittings, oring, and quick disconnect. Both 2,000 PSI & 10,000 PSI gauges are required to service the machine.

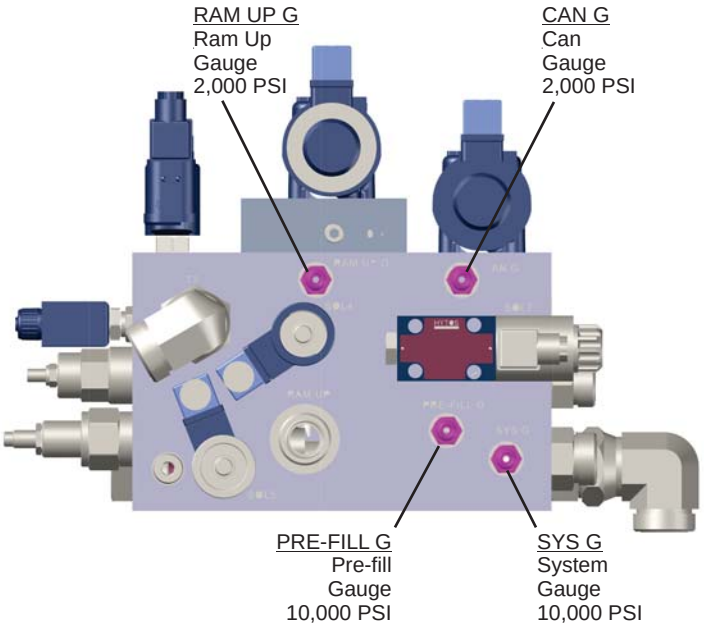

Parts List—Pressure Gauges

Find the correct assembly first, then find the needed components. The item letters (A, B, C, etc.) assigned to assemblies are referred to in the "Used In" column to identify which components belong to an assembly. The item numbers (1, 2, 3, etc.) assigned to components relate the parts list to the illustration.

Used In	Item	Part Number	Description	Comments
	A	AHT10053D	MAIN MANIFOLD ASSY/NON BOOSTER-96DH463	REFERENCE
			COMPONENTS	
all	1	AHT10053B	PRESS-2,000PSI TEST GAUGE	
all	2	AHT10053C	PRESS-10,000PSI TEST GAUGE	

Hydraulic Tank

MP1A50 (MP1540, MP1640, MP1556, & MP1656 Produced before 11/2019**)**

Figure 1: Hydraulic tank

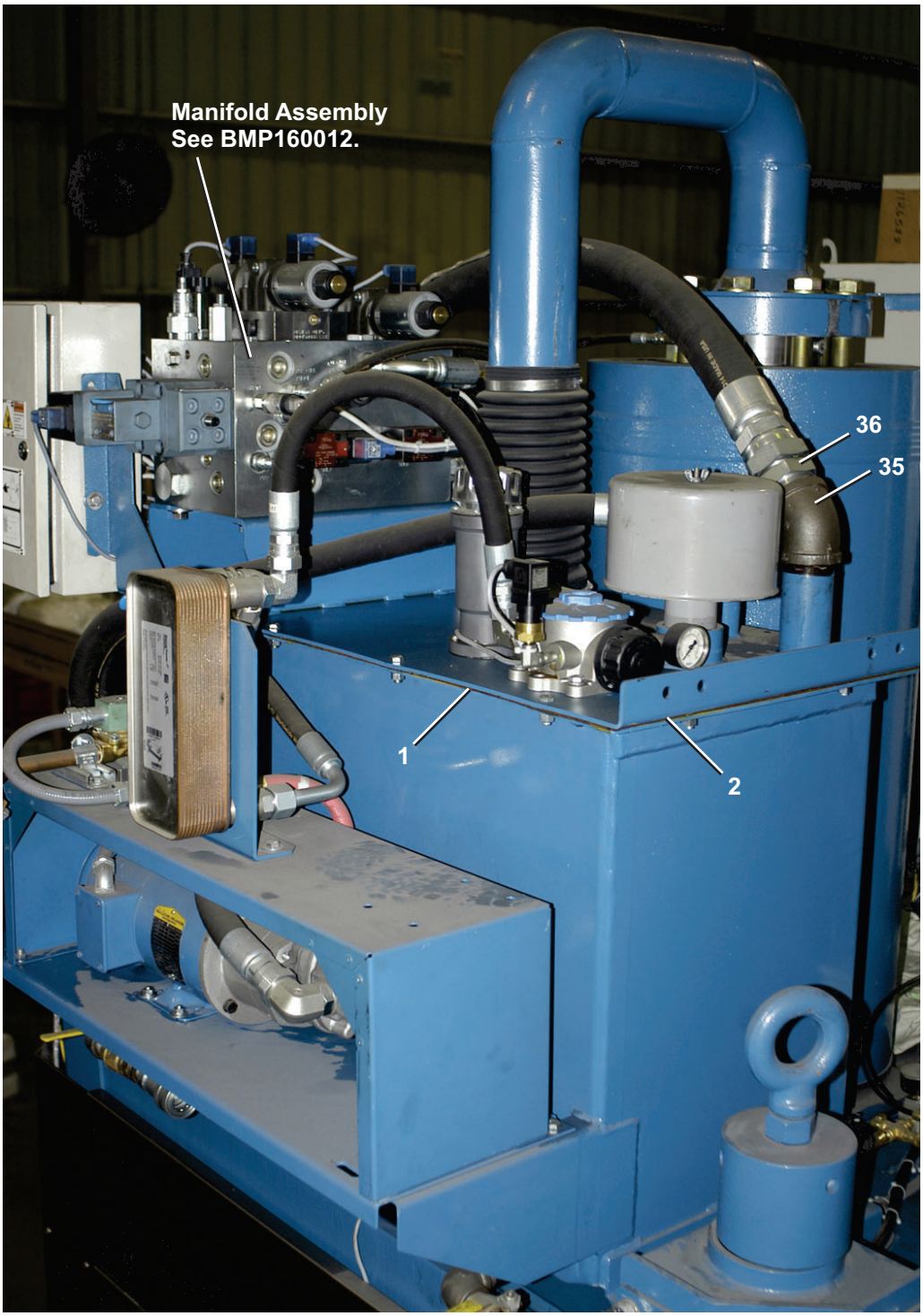

Hydraulic Tank

MP1A50 (MP1540, MP1640, MP1556, & MP1656 Produced before 11/2019**)**

Figure 2: MP1A50 Shown

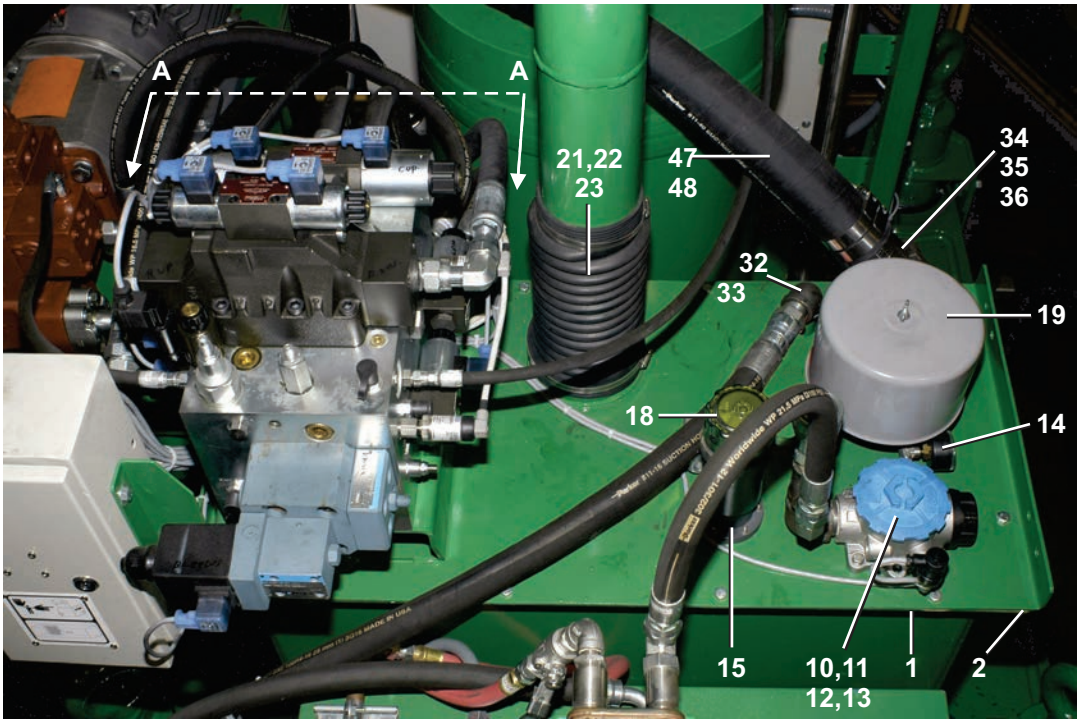

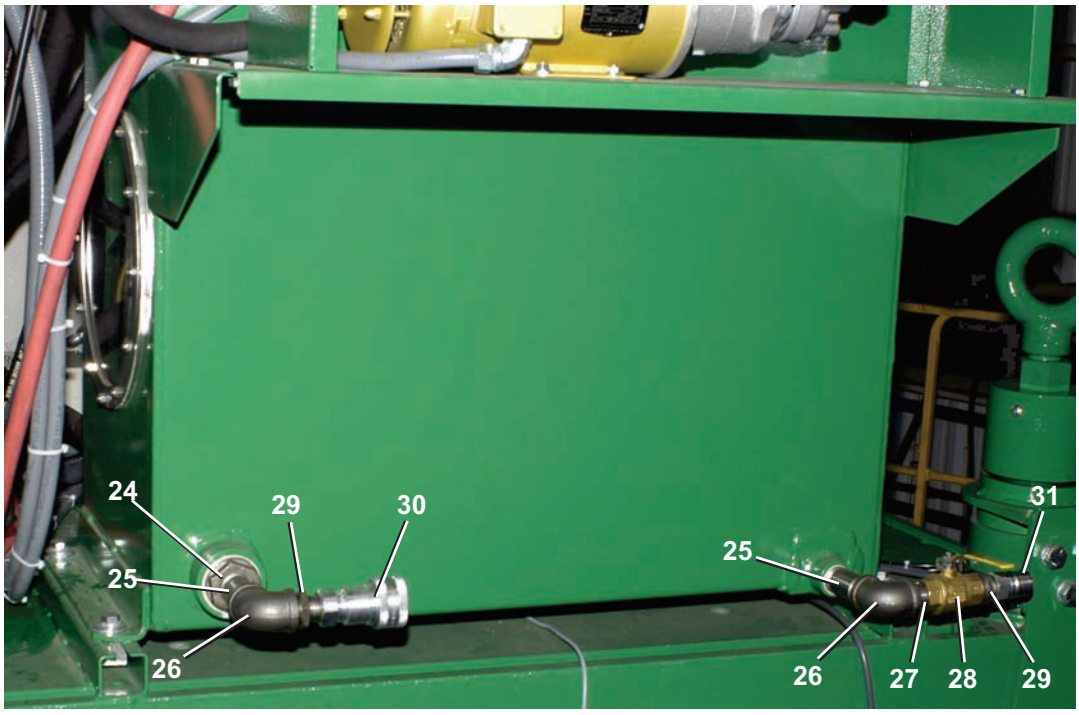

Hydraulic Tank

MP1A50 (MP1540, MP1640, MP1556, & MP1656 Produced before 11/2019**)**

Figure 3: Hydraulic tank fittings

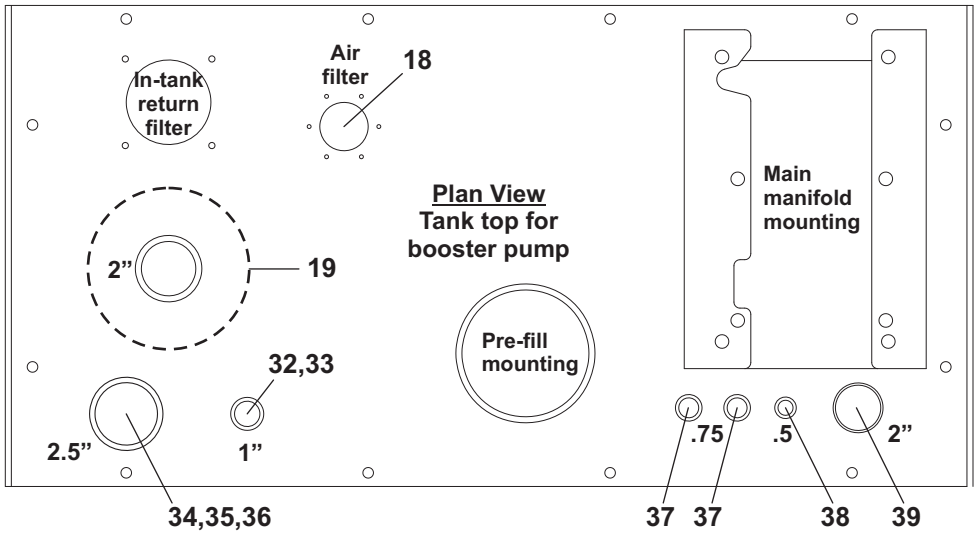

Filter to Booster Pump

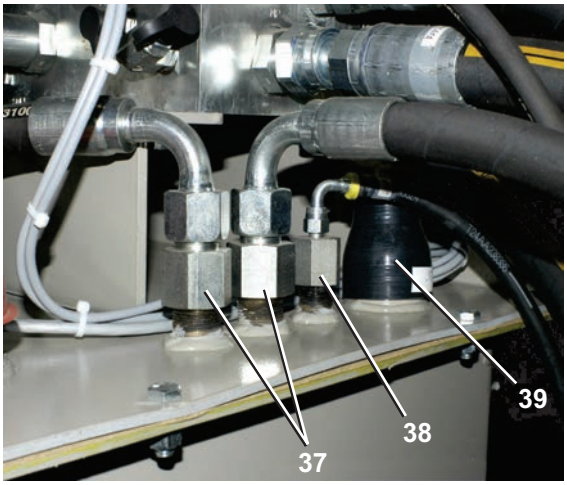

View A-A:

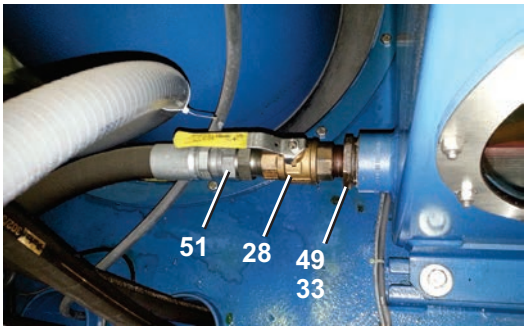

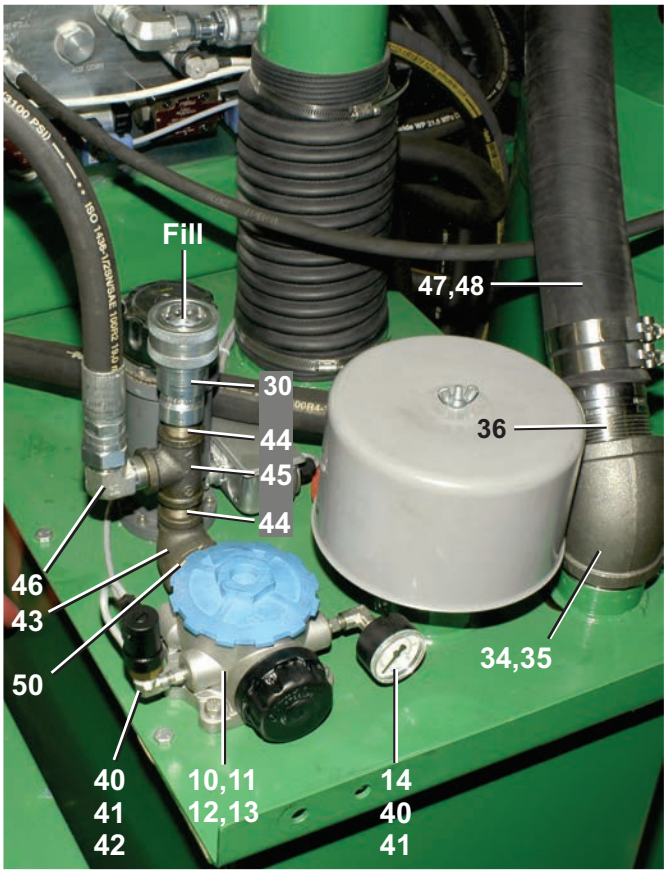

Hydraulic Tank

MP1A50 (MP1540, MP1640, MP1556, & MP1656 Produced before 11/2019**)**

Figure 4: Components

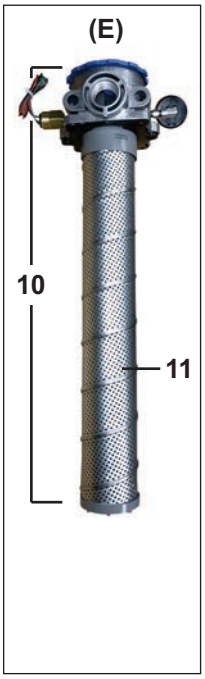

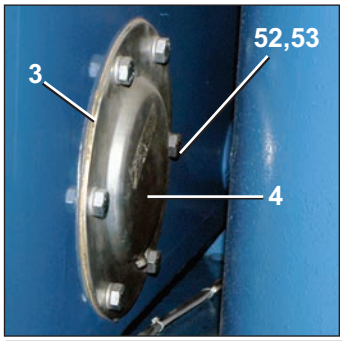

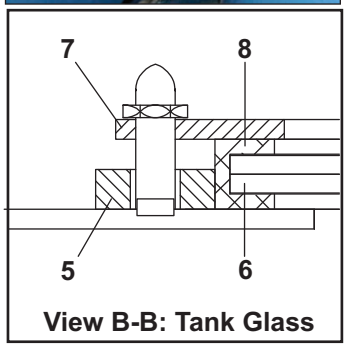

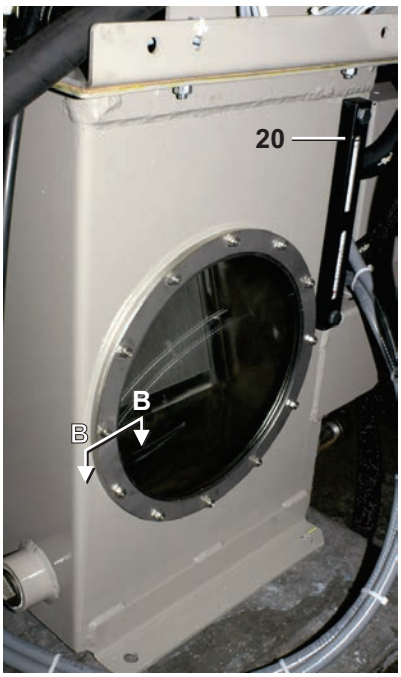

Parts List

Find the correct assembly first, then find the needed components. The item letters (A, B, C, etc.) assigned to assemblies are referred to in the "Used In" column to identify which components belong to an assembly. The item numbers (1, 2, 3, etc.) assigned to components relate the parts list to the illustration.

Used In	Item	Part Number	Description	Comments
			ASSEMBLIES	
	A	AHT10052B	PRESS HYD TANK/MANIFOLD-BOOSTER	MP1556 & MP1656 (Before 11/2019)
	B	AHT10052C	PRESS HYD TANK/MANIFOLD-NON BOOSTER	MP1540 MP1640(Before 11/2019)
	C	AHT10062A	PRESS HYD TANK/MANIFOLD MP1A50-96DH464	MP1A50
	D	AHT10066	INTANK FILTER+3/4FEM QUICKCONN	Models Produced Before 01/2021
	E	AHT10066A	INTANK FILTER+3/4FEM QUICKCONN	Models Produced After 01/2021
			COMPONENTS	
all	1	07 10530	HYDTANK TOP GASKET-LONG SIDE	
all	2	07 10530A	HYDTANK TOP GASKET-SHORT SIDE	
all	3	02 18105A	HYD TANK COVER GASKET	
all	4	02 18618	COVER=BEARHOUSE	
all	5	X7 10311A	GLASS SPACER-SSPRESS HYDTANK	

Hydraulic Tank

MP1A50 (MP1540, MP1640, MP1556, & MP1656 Produced before 11/2019**)**

Parts List—Hydraulic Tank

Find the correct assembly first, then find the needed components. The item letters (A, B, C, etc.) assigned to assemblies are referred to in the "Used In" column to identify which components belong to an assembly. The item numbers (1, 2, 3, etc.) assigned to components relate the parts list to the illustration.

Used In	Item	Part Number	Description	Comments
all	6	02 09215	DRGLASS 12 3/8DIA SS STAMPED	
all	7	07 10392	RING=DOOR GLASS PRESSURE-SSPRESS	
all	8	02 02366C	DOORGLASS GASKET 11"OD-NITRILE BLK	
D	10	27E7112	INTANK RETURN FILTER DONALDSON	
E	10	27E7120	INTANK RETURN FILTER DONALDSON	
,				
D	11	27E7112B	FILTER 11 MIC 8.27"LG DONALDSON P171846	
E	11	27E7112E	FILTER 5 MIC 19"LG DONALDSON EB125	
all	12	27E7112A	FILTER GAUGE-DONALDSON#P171956	
all	13	27E7112C	ELEC.INDICAT-DONALDSON#P171966	
all	14	30N101	PRESSGAUGE 1/8"BACKCN.0-60PSI	
all	15	27E7200	LEVEL/TEMP INDICATOR SWITCH ASSY	
all	16	60E099	HOSE1.5"WIREINSERT#7216-TRANS	
all	17	27A060S	HOSECLAMP1+5/16-2.25SSSC#HSS28	
all	18	27E7201	FILLER-BREATH-FILT.LHA#ABB-40N DONALDSON P562603	
all	19	27E7116	BREATHER 2"NPT 135CFM LDI#AB-E30S-200	
all	20	27E7303	LEVEL INDICATOR W/THERM-STAUFF	
all	21	60E025	4.5"/5.75" X 12"LG.#45A450575	
all	22	27A086	HOSECLAMP 3+1/8-6"CADSCR#HS-88	
all	23	27A087	HOSECLAMP 4+1/16-5"CADSCR#HS72	
all	24	5SB2A1ACEO	NPTHEXBUSH 2X1 BLKCI 125#	
all	25	5N1A03KF42	NPT NIP 1X3.5 TBE BLK STL SK40	
all	26	5SL1AMFA	NPT ELBOW 90DEG 1" BLKMAL 150#	
all	27	5N1ACLSF42	NPT NIP 1X CLS TBE BLKSTL SK40	
all	28	96D084	BALL VALVE BRZ 1"BONOMI 171N	
all	29	5SB1A0PFEO	NPTHEXBUSH 1X3/4 BLKSTL 125#	
all	30	52XY0BP00X	3/4"QUICK DISCONN.FEM #H6-62	
all	31	52XY0BP00Y	3/4"QUICK DISCONN.MALE#H6-63	
all	32	52JY1AR003	ELB.90 1"MJXFJICSW #6500-16-16	
all	33	27E7111	SUCT.STRAINER=EZYFLO#S-15-100	
AB	34	27E7108	SUCTION STRAINER 2" PORT	
C	34	27E7114	SUCT.STRAIN.2+1/2"FLOWEZY	
B	35	5SL2AKFA	NPT ELBO 45DEG 2" BLK 150#	
C	35	5SL2KKFA	NPT ELB 45DEG 2.5 BLK 150#	
AB	36	52XY1AP013	2"STRADPT-MNPTXMJIC#32 FTX-S	
C	36	51E098C	KINGCOMNIP 2.5"IDXNPT #ST30	
all	37	52XY0KR037	3/4"FNPTXMJIC#12GTX-S	
all	38	52XY0KR038	1/2"FNPTX1/4"MJIC#4-8GTX-S	

Hydraulic Tank

MP1A50 (MP1540, MP1640, MP1556, & MP1656 Produced before 11/2019**)**

Parts List—Hydraulic Tank

Find the correct assembly first, then find the needed components. The item letters (A, B, C, etc.) assigned to assemblies are referred to in the "Used In" column to identify which components belong to an assembly. The item numbers (1, 2, 3, etc.) assigned to components relate the parts list to the illustration.

Used In	Item	Part Number	Description	Comments
all	39	60E022	HOSE REDUCER 2"X1.25" 5-PLY SILICONE	
all	40	52JY0CR001	ELBOW 1/8"FEM.#5504-02-02	
all	41	52LY0CR001	HEXPIPNIP 1/8"XCLOSE#5404-2-2	
all	42	27E7106C	EPS-1 - SWITCH=27E7106 STAUFF	
all	43	5SL1EFFA0P	NPTELB 90DEG 1.25X3/4BLKMAL150	
all	44	5N0PCLSF42	NPT NIP 3/4XCLS TBE BLKSTLSK40	
all	45	5S0PMFA	NPT TEE 3/4" BLKMAL 150#	
all	46	52ZJ00S007	TUBEFIT90ELFCSL3/4"#12CLO-S	
all	47	60EH96C75A	HYD HOSE 2+1/2" X 75" NO ENDS	
all	48	27A074S	HOSECLAMP 2+1/16-3"SSSCR#64040	
AB	49	5SB1K1ADEO	NPTHEXBUSH 1.5X1 GALCI 125#	
C	49	5SB1K1AMFO	NPTHEXBUSH 1.5X1 BLACK 150#	
all	50	5N1ECLSF42	NPT NIP 1.25XCLS TBE BLKSTLS40	
all	51	52XY1AP010	STRADPT 1"MXMJIC #2404-16-16	
all	52	15K095	HXCPSCR 3/8-16UNC2AX1 GR5 ZINC	
all	53	15U240	FLATWASHER(USS STD) 3/8" ZNC P	
all	54	15G205	HXNUT 3/8-16UNC2B ZINC GR2	
all	55	15K145	HXCAPSCR 1/2-13UNC2AX3/4 GR5 P	
all	56	15U300	LOKWASHER REGULAR 1/2 ZINC PLT	

Hydraulic Oil Add

BNP1PI01.C01 0000159985 B.2 1/4/21 3:02 PM Released

This dealer instruction applies to all Milnor 1–stage presses—the newer, single-manifold models, the older multi-manifold models, and all sizes, up to and including the MP1A_ models. However, the procedures vary somewhat, across models. Where this occurs, the differences are explained. This instruction explains:

- how to add oil at installation or after major hydraulic component replacement
- how to replace oil that has become unserviceable

The procedure to top off the hydraulic oil when it falls below full is routine maintenance that can be performed by the customer, and is explained in the maintenance guide.

Whenever hydraulic oil is added to the 1–station press, it is always necessary to pass the oil through a clean filter of the correct mesh size. Even new oil, as it comes in the container, is not sufficiently clean. A very serious consequence of failure to pass the oil through a filter is ram scoring. If this occurs, it will become necessary to replace this costly component.

CAUTION: **Insufficient or bad lubricant —** will decrease the life of components.

▶ Add lubricant as specified in this instruction.

▶ Make sure that all equipment and fittings used to apply lubricants are clean.

▶ Use only the given lubricants or lubricants that have the same specifications.

The filter through which oil added to the press is passed can be internal (a press component) or external (typically on an oil filter cart). There are several locations on the press tank where oil can be added, but only one of these puts the oil through a filter. If an external filter is not available, it is necessary to add oil through the internally filtered inlet.

The press internal filter can perform any of three possible functions at different times: oil add, flush, and recirculation. Single-manifold machines use the same filter size to perform all functions. Older, multi-manifold machines, can require a different filter size for each function. Hence, it can be necessary to put a different filter cartridge in the filter receptacle depending on the function to be performed.

1. Internal Filter Functions and Cartridges Used in 1–Station Presses

BNP1PI01.R01 0000160059 B.2 B.3 1/5/21 11:07 AM Released

Filter Functions

oil add filtering required whenever oil is added to the press, whether filling the empty tank or topping off the tank to the full mark. Always use a cartridge of the size specified in the table below.

flush filtering required at installation and after replacement of major hydraulic components, such as the ram. Before production starts, run the press for eight (8) hours to remove contaminates that may have entered when tank openings, ram opening, or hose connections were exposed.

recirculation filtering that occurs continuously while the press is in operation. Depending on the model, this can require a coarser filter so that oil flow is not impeded.

Required Cartridge

Model	Number of internal filters	Filter Function	Cartridge Mesh Size (microns)	Milnor P/N
All single-manifold models and sizes manufactured after December 2020	1	any	5	27E112E
All single-manifold models and sizes manufactured through December 2020	1	any	11	27E7112B
All older multi-manifold models except MP1A	1	oil add	23 to 25	27E7106A
		flush	4	27E7106E
		recirculation	23 to 25	27E7106A
Older MP1A_ multi-manifold models	2 •	oil add	23 to 25	27E7106A
		flush	4	27E7106E
	•	recirculation	11	27E7112B

2. Hydraulic Oil Maintenance Components, Capacities, and Specification

BNP1PI01.R02 0000160058 B.2 A.4 1/2/20 1:58 PM Released

Maintenance Components and Oil Capacities

Figure 1. Maintenance Components and oil capacities

Typical Multi-manifold Machine

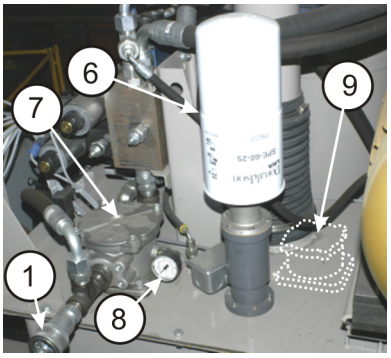

Legend

1. Filtered inlet. Add oil here. System capacity: MP15_ and MP16_ models = 70 gallons (265 liters). MP1A_ models = 115 gallons (435 liters)
2. Remove oil here.
3. View port
4. Level and temperature gauges
5. Tank is full when the level is here. See caution statement.
6. Breather and moisture filter
7. Housing with oil filter
8. Oil filter pressure gauge
9. Housing with recirculation oil filter on older MP1A_ models
10. Air filter on oil cooler
11. Unfiltered inlet — newer single-manifold machines only

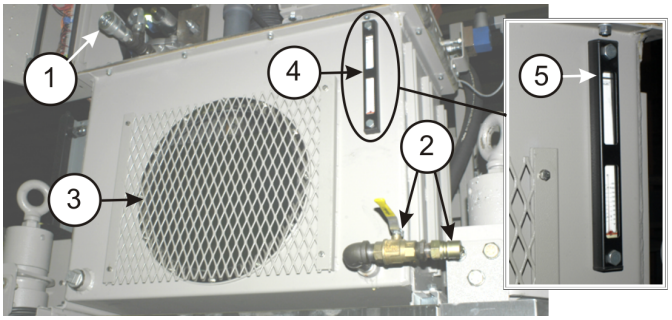

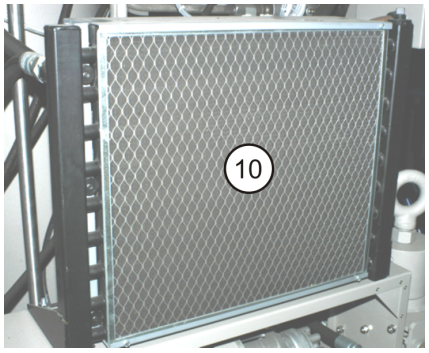

Typical Single-manifold machine

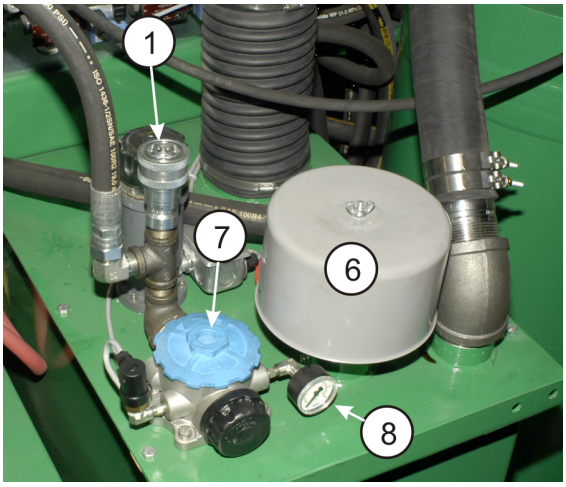

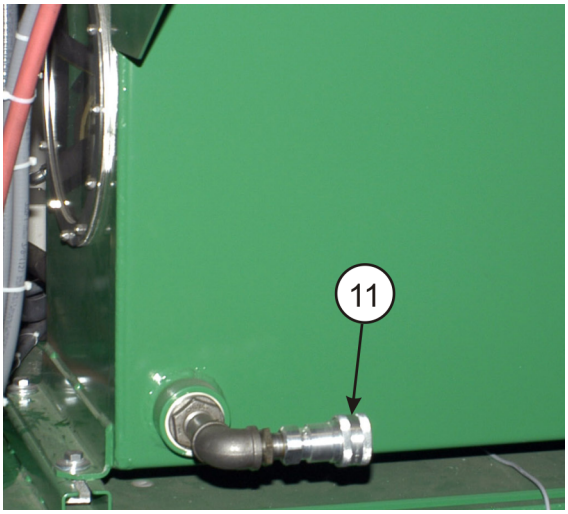

Specification — The hydraulic system in all Milnor 1–station press models uses Shell Tellus 68 or equivalent oil.

3. Add Oil at Installation or After Major Hydraulic Component Replacement — Flush Required

BNP1PI01.T01 0000160060 B.2 1/4/21 3:07 PM Released

Before proceeding, make sure:

- **the machine is fully assembled**
- **all hydraulic connections are tight**
- **the ram is in the up position and held up by the safety bars**
- **power is removed at the external disconnect box**

CAUTION: **Adding oil with the ram in the wrong position** — Will cause a large quantity of oil to spill the first time the machine is operated.

▶ Add oil only with the ram up and secured.

1. Determine if an external filter will be used.
   - If the oil will be passed through an external filter, it is acceptable to add oil at any convenient, unfiltered port on the tank.
   - If no external filter is available, it is necessary to add oil through the quick disconnect inlet on top of the tank (Item 1 in Figure Figure 1: Maintenance Components and oil capacities, page 3).
2. Examine the filter cartridge to confirm that it is the mesh size specified in : Required Cartridge, page 2 and it is clean. If this procedure is due to major hydraulic component replacement, replace the used oil filter cartridge with a new one.

   NOTE: New 1–station presses are shipped from the Milnor factory with a 5 micron internal oil filter installed. This filter was used to test system at the factory, but is still serviceable. It can be used to add oil and flush the system on site.
3. Add new oil (Shell Tellus 68 or equivalent) until the fill gauge on the hydraulic tank indicates the system is full. This will require approximately the volume of oil given in Figure Figure 1: Maintenance Components and oil capacities, page 3 for your model.

   Before the machine can be put into service, it is necessary to flush the hydraulic system. This is an eight (8) hour process and must be performed when the machine is off line.
4. Flush the hydraulic system, as follows:
   a. Ensure that the cartridge currently installed in the machine is the correct size to flush the system.
   b. Restore external power to the machine.
   c. Apply control power ( ).

d. Start the machine (①).

e. Let the machine run for eight (8) hours.

f. Shut down the machine and remove power at the external disconnect box.

g. Remove and discard the oil filter that was used to flush the system.

h. Add a new filter cartridge of the mesh size given in : Required Cartridge, page 2 for your model and for the recirculation function.

4. Replace Unserviceable Oil — Flush Not Required

BNP1PI01.T02 0000160124 B.2 A.3 1/2/20 1:58 PM Released

Before proceeding, make sure:

- **the ram is in the up position and held up by the safety bars**
- **power is removed at the external disconnect box**

CAUTION: **Adding oil with the ram in the wrong position** — Will cause a large quantity of oil to spill the first time the machine is operated.

▶ Add oil only with the ram up and secured.

1. Make sure that the manual valve on the tank drain port (item 2 in Figure Figure 1: Maintenance Components and oil capacities, page 3) is closed.
2. Connect the drain hose between the drain port on the tank and the container you will use to collect the used oil.

   NOTE: The drain port has a quick disconnect fitting. It will be necessary to use a hose with a mating fitting or remove the quick disconnect fitting from the drain port.

3. Operate the manual valve to allow oil to flow. Close the valve when the tank is empty.
4. Remove the drain hose. If you removed the quick disconnect fitting, either replace it or put a cap on the drain pipe.
5. Determine if an external filter will be used.
   - If the oil will be passed through an external filter, it is acceptable to add oil at any convenient, unfiltered port on the tank.
   - If no external filter is available, it is necessary to add oil through the quick disconnect inlet on top of the tank (Item 1 in Figure Figure 1: Maintenance Components and oil capacities, page 3).
6. Replace the used oil filter cartridge with a new one. Make sure the new cartridge is the mesh size specified in : Required Cartridge, page 2 .
7. Add new oil (Shell Tellus 68 or equivalent) until the fill gauge on the hydraulic tank indicates the system is full. This will require approximately the volume of oil given in Figure Figure 1: Maintenance Components and oil capacities, page 3 for your model.

End of document: BNP1PI01

Hydraulic Main Pump

MP1540_ with Single Manifold and Skidded Hydraulics (Produced after 08/2020.)

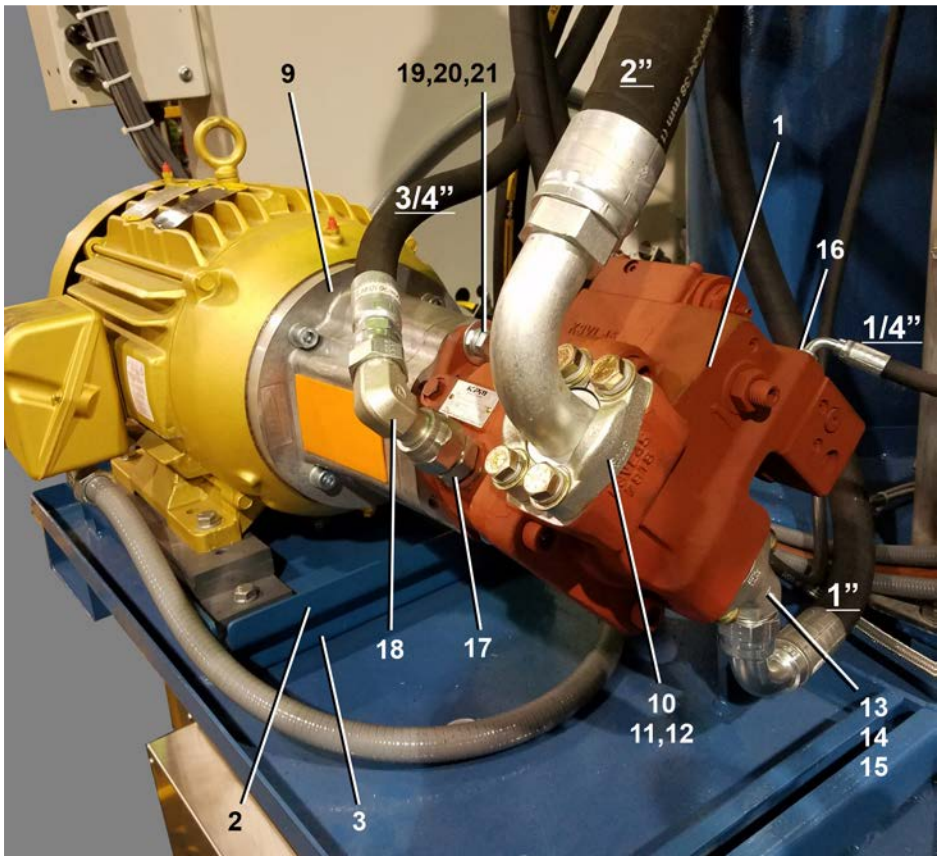

Coupling Assembly

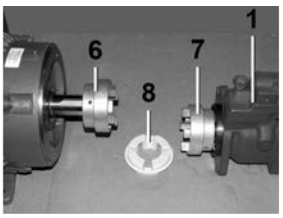

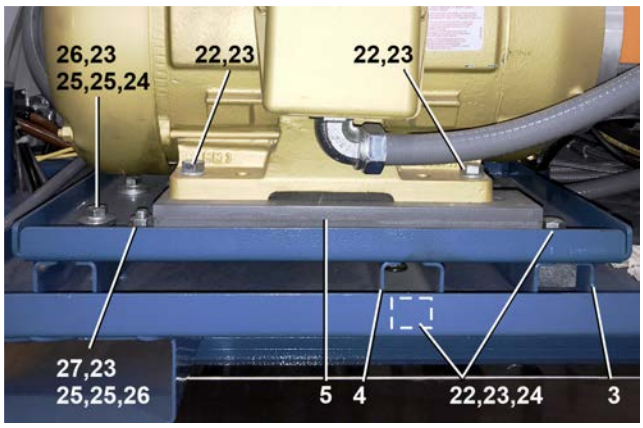

Hydraulic Main Pump

MP1540_ with Single Manifold and Skidded Hydraulics (Produced after 08/2020.)

Table 1. Parts List—

Find the assembly for your machine and the letter shown in the "Item" column. The components for your machine will show this letter or the word "all" in the "Used In" column. The numbers shown in the "Item" column are those shown in the illustrations.

Used In	Item	Part Number	Description/Nomenclature	Comments
Assemblies				
	A	GHC10024	MOTOR 254TC/45CC PUMP INSTL	REFERENCE
Components				
all	1	27E550466	PISTON PUMP 45CC	PUMP
all	2	07 10753	MAIN PUMP 75CC MTG PLATE	
all	3	07 10531F	MOUNTING RAIL 14"LG	
all	4	07 10531	RAIL=MOTOR MOUNT 8"LG	
all	5	60BS6841	DAMPENING ROD #HC-286TC-W (EACH = 1 BAR)	
all	6	27E5510	COUP.ASSY.=1+5/8"BOREX3/8"KEYWAY	
all	7	27E5504E	COUP.ASSY.1"BX1/4KW #M30010008	
all	8	27E5510B	HYTREL INSERT-MAGNA#M370H5	
all	9	27E5504D	PUMP-TO-MOTOR MT.	
all	10	27E5504A	SUCTION PORT-1-1/2"SPLIT FLANGE	
all	11	27E5504AB	O-RING FOR (27E5504A)	
all	12	5SL2AMFA1K	NPT ELB 90DEG 2X1.5 BLKMAL150#	
all	13	27E5504B	PRESSURE PORT-1"SPLITFLANGE	
all	14	27E5504BA	O-RING FOR (27E5504B)	
all	15	52JY1AR014	EL45COD61FLGSEALOK1"#16-LOVQ1S	
all	16	52ZC0ES003	TUBEFITSTR1/4X3/8#4-6 F5OLO-S	
all	17	52ZCF50L0S	TUBEFITSTR3/4X1/2"#12-8 F5OLO-S	
all	18	52ZJ00S006	TUBEFIT90EL3/4"#12 C6LO-S	
all	19	15K222B	HEXCAPSCR 5/8-11 UNCX1+3/4 GR5	
all	20	15U316	FLTWASH 5/8 HARD ASTM F436	
all	21	15U315	LOKWASHER MEDIUM 5/8 ZINCPL	
all	22	15K182	HEXTAPSCR 1/2-13X2ZINC GR5 FUL	
all	23	15U300	LOKWASHER REGULAR 1/2 ZINC PLT	
all	24	02 19283	NUT=1/2-13UNCX1+1/2SQ SPEC	
all	25	15U280	FL+WASHER(USS STD)1/2 ZNC PL+D	
all	26	15K162	HXCAPSCR 1/2-13UNC2AX1.5 GR5 P	
all	27	15G230	HXNUT 1/2-13UNC2B SAE ZINC GR2	

Pre-fill Pipe & Valve

MP1540, MP1556, MP1640, MP1656, MP1A50
MPL556, MPL640, MPL650, MPL656

Pellerin Milnor Corporation
P. O. Box 400, Kenner, LA 70063-0400

Litho in U.S.A.

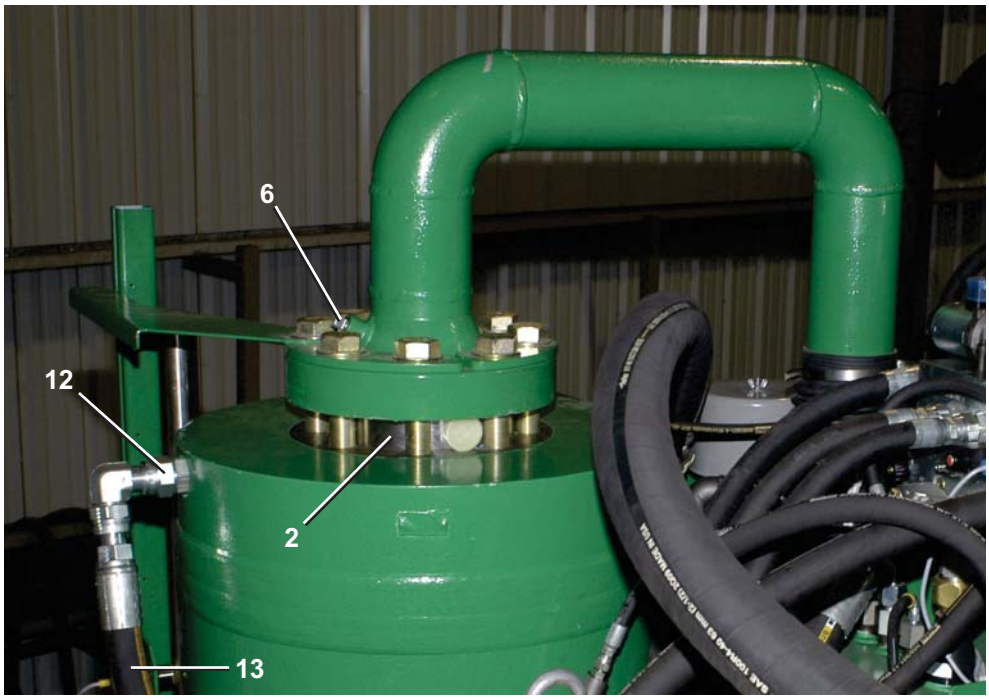

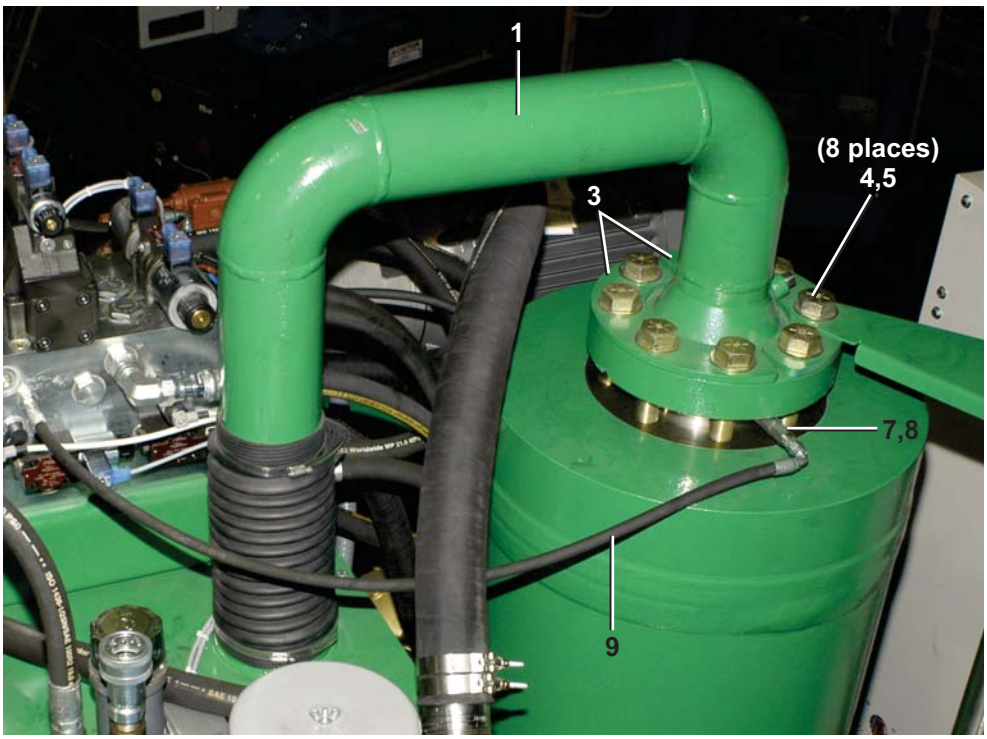

Pre-fill Pipe & Valve

MP1540, MP1556, MP1640, MP1656, MP1A50
MPL556, MPL640, MPL650, MPL656

Pellerin Milnor Corporation
P. O. Box 400, Kenner, LA 70063-0400

Litho in U.S.A.

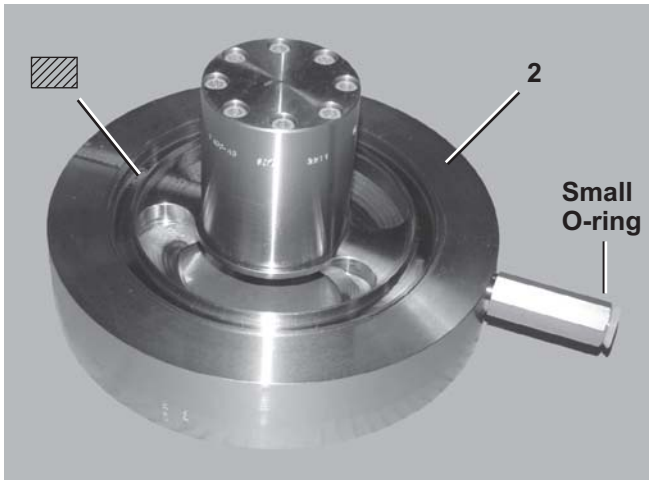

Prefill Valve

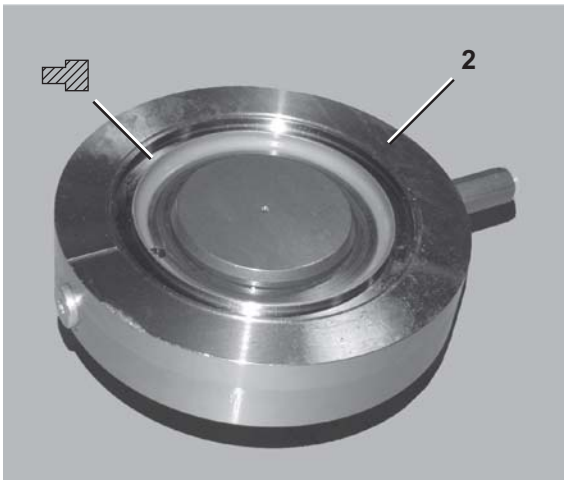

Bottom View: Prefill Valve

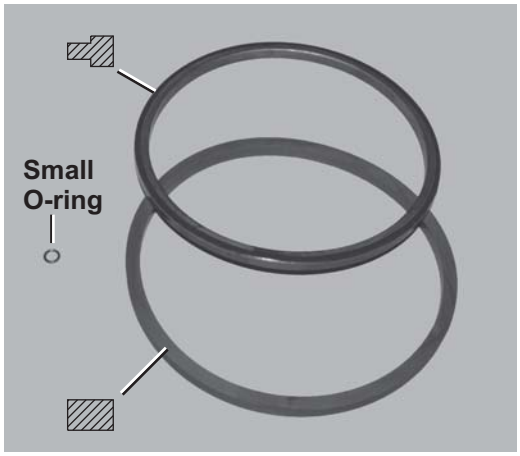

O-ring Kit for Prefill Valve (14)

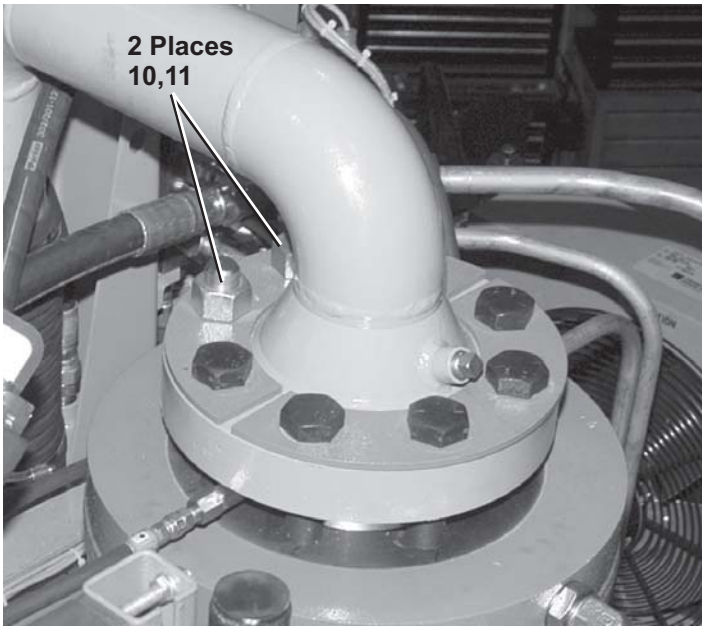

Detail: Hardware, Short Pre-fill Pipe (11.13”)

Pellerin Milnor Corporation
P. O. Box 400, Kenner, LA 70063-0400

Litho in U.S.A.

Parts List—Pre-fill Pipe & Valve

Find the correct assembly first, then find the needed components. The item letters (A, B, C, etc.) assigned to assemblies are referred to in the "Used In" column to identify which components belong to an assembly. The item numbers (1, 2, 3, etc.) assigned to components relate the parts list to the illustration.

Used In	Item	Part Number	Description	Comments
			----------REFERENCE ASSEMBLIES----------	
	A		REM TOP PREFILL PIPE-SHORT	MP15x/16x, MPL640,650 MPL556,656
	B		REM TOP PREFILL PIPE-TALL	MP15x/16x, MPL640,650 MPL556,656
	C		REM TOP PREFILL PIPE-SHORT MPIA	MP1A50
	D		REM TOP PREFILL PIPE-TALL-MP1A	MP1A50
			----------COMPONENTS----------	
A	1	W7 10240	SHORT PREFILL PIPE-REM TOP	
B	1	W7 10240A	TALL PREFILL PIPE-REM TOP	
C	1	W7 10290	MP1A50 SHORT PREFILL PIPE-REM TOP	
D	1	W7 10290A	MP1A50 TALL PREFILL PIPE-REM TOP	
all	2	X7 10416B	PREFILL VALVE HAWE-MACHINED	
all	3	X7 10267	PREFILL PIPE FLANGE WASHER	
all	4	15K307	HEXCAPSCR 1+1/8-12X5+1/2" GR8	
all	5	15U441	FLTWASH 1-1/8" HARD ASTM F436	
all	6	51P031	PLUG PIPE SQ 1/2-14 NPT HD PLA	
all	7	52AY0ER013	CONV.ADAPT.BRIT.1/4X1/4F40HG-SS	
all	8	52ZC0ES001	TUBEFIT 1/4"STR.#4-4 FLO-S	
AB	9	60EH21C42A	ASSY=HYDRAULIC HOSE 1/4 X42LG	
CD	9	60EH21C40A	ASSY=HYDRAULIC HOSE 1/4 X40LG	
all	10	17R113A07K	STUD 1 1/8-12UNFX7+1/2 B7 ZINC	
all	11	15G258	HXNUT 1+1/8-12UNF2B ZINC GR2	
all	12	52ZC00S008	TUBEFITSTRTHDCON 1"#16 F5OLO-S	
all	13	60EH75C84A	ASSY=HYDRAULIC HOSE 1"X84"LG	
all	13	60EH75C76A	HYDHOSE 1"STRFEMORSWX90FEMORSW=76"	
all	14	96RH712FOR	ORING KIT FOR 96RH712F	
all	15	27E5516	HOSCLAMP HALVES 1"-H4 PARK#H6378HPP	
all	16	27E5518	CLAMP COVER PL 1"-H6 PARKER #CPH-6	
all	17	27E5523	HOSCLAMP LOCK PLATE #LP-3	
all	18	27E5524	HOSCLAMP SPEED NUT #CRA1-8	

Oil Cooler - Air Cooled

MP1540, MP1556, MP1640, MP1650, MP1656, MP1A50
MPL556, MPL640, MPL650, MPL656

BMP110033/2021055A
(1 / 2)

Pellerin Milnor Corporation
P. O. Box 400, Kenner, LA 70063-0400

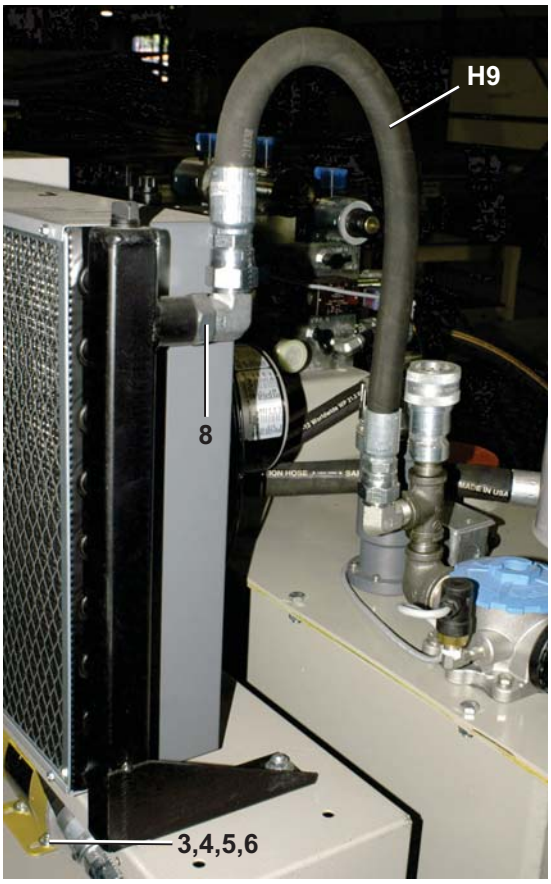

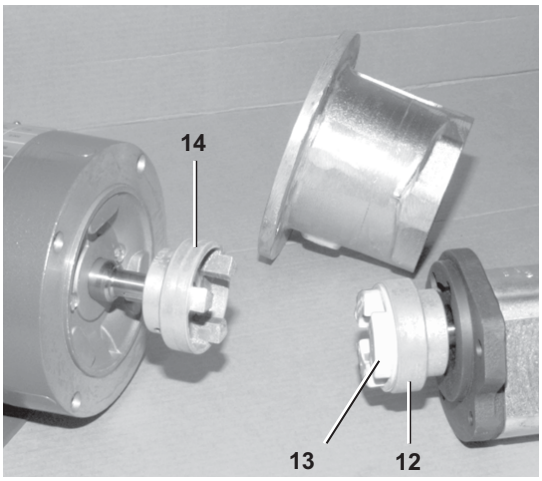

Cooler Pump Coupling Assembly

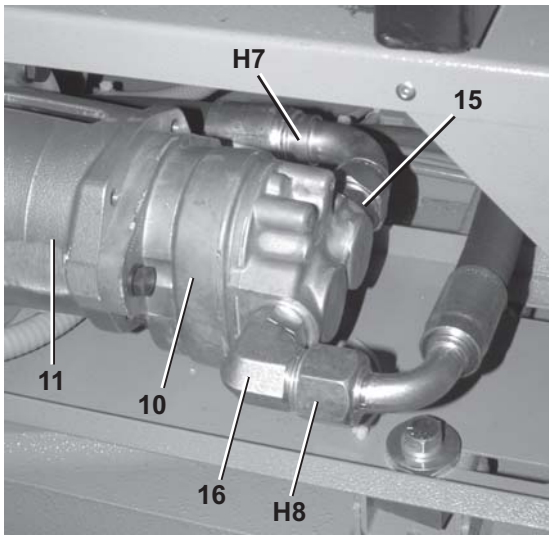

Oil Cooler - Air Cooled

MP1540, MP1556, MP1640, MP1650, MP1656, MP1A50 MPL556, MPL640, MPL650, MPL656

Pellerin Milnor Corporation
P. O. Box 400, Kenner, LA 70063-0400

Litho in U.S.A.

Parts List—Oil Cooler - Air Cooled

Find the correct assembly first, then find the needed components. The item letters (A, B, C, etc.) assigned to assemblies are referred to in the "Used In" column to identify which components belong to an assembly. The item numbers (1, 2, 3, etc.) assigned to components relate the parts list to the illustration.

Used In	Item	Part Number	Description	Comments
:----------			----------ASSEMBLIES----------	
	A	G80CT001A	COOLING TOWER- 96DH462A & 96DH463	MP15X, MP16X MPL640,650 MPL556,656
	B	G80CT001B	COOLING TOWER ASSY-96DH464	MP1A50
----------			----------COMPONENTS—----------	
A	1	07 10308	RECIRC PUMP HOUSING-TOP	
B	1	07 10308B	RECIRC PUMP HOUSING-TOP	
A	2	07 10796	RECIRC HOUSING BOTTOM	
B	2	07 10798	RECIR HOUSING BOTTOM-MP1AXX	
all	3	15K095	HXCPSCR 3/8-16UNC2AX1 GR5 ZINC	
all	4	15G205	HXNUT 3/8-16UNC2B ZINC GR2	
all	5	15U255	LOCKWASHER MEDIUM 3/8 ZINCPL	
all	6	15U240	FLATWASHER(USS STD) 3/8" ZNC P	
all	7	15K085	HEXCAPSCR 3/8-16UNC2AX3/4 GR5	
all	8	52ZJ00S009	TUBEFIT90EL3/4X5/8"FACESEAL OR	
all	9	52ZC00S003	TUBEFIT STRTHDCN3/4"#12F5OLO-S	
all	10	27E5506	GEAR PUMP-RECIRC.PUMP-EATON	
all	11	27E5506A	PUMP TO MOTOR MOUNT	
all	12	27E5506G	COUP ASSY=5/8" BORE X 5/32" KW	
all	13	27E5506D	URETHANE INSERT FOR COUP.ASSY.	
all	14	27E5506B	COUP.ASSY=5/8"BORE X 3/16"KW	
all	15	52XY0KR050	STRDPT 3/4MX1"MJ#6400-16-12-0	
all	16	52ZJ00S007	TUBEFIT90ELFCSL3/4"#12CLO-S	
all	17	27HS091AAU	OIL COOLER 8HP@15GPM 50/60	
all	17	27HS092AAU	OIL COOLER 20HP@10GPM 50/60	
all	17	27HS091A98	OIL COOLER 8HP@15GPM 575V	
all	17	27HS092A98	OIL COOLER 20HP@10GPM 575V	
all	H7-H9		FOR HOSES, SEE BMP200015.	

Oil Cooler - Water Cooled

MP1540, MP1640, MP1556, MP1656, MP1A50
MPL550, MPL556, MPL640, MPL650, MPL656

Figure 1

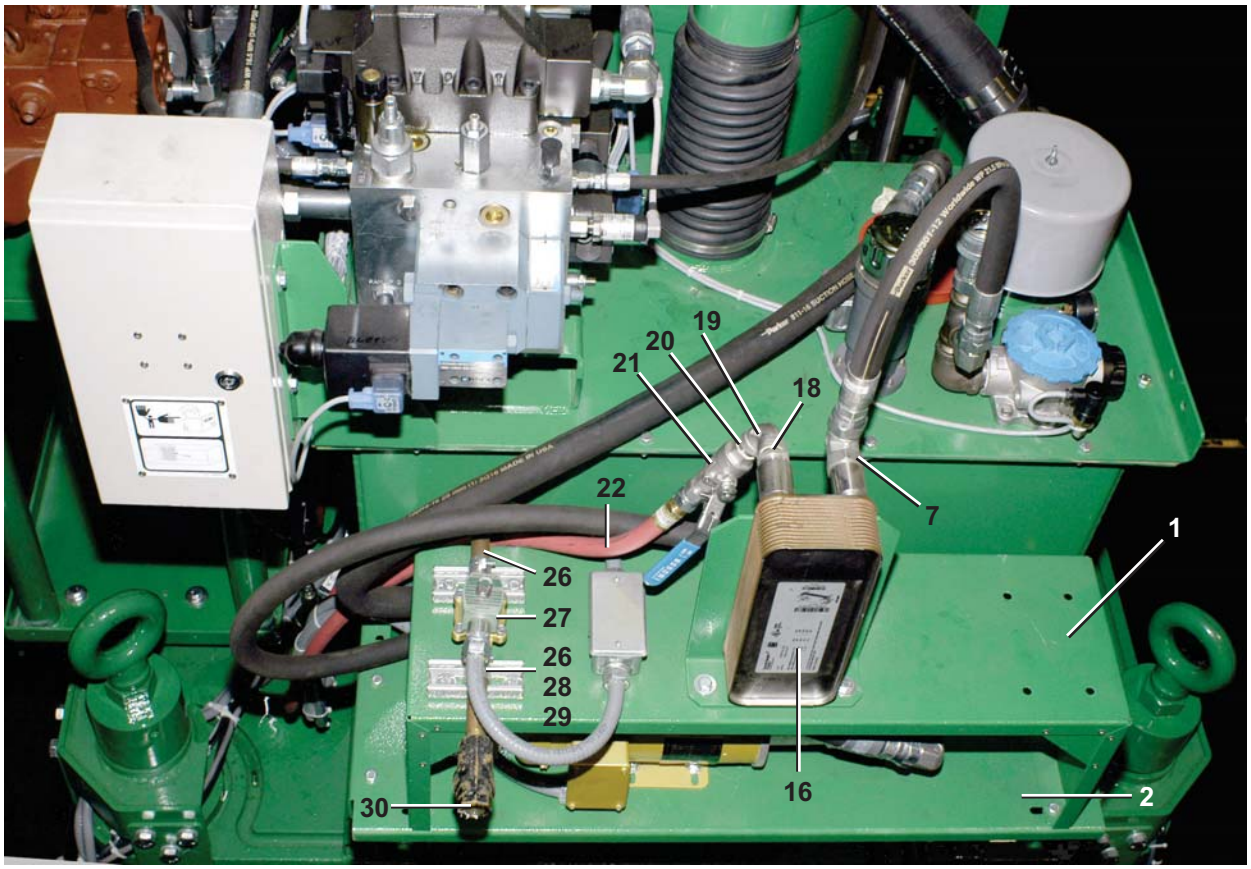

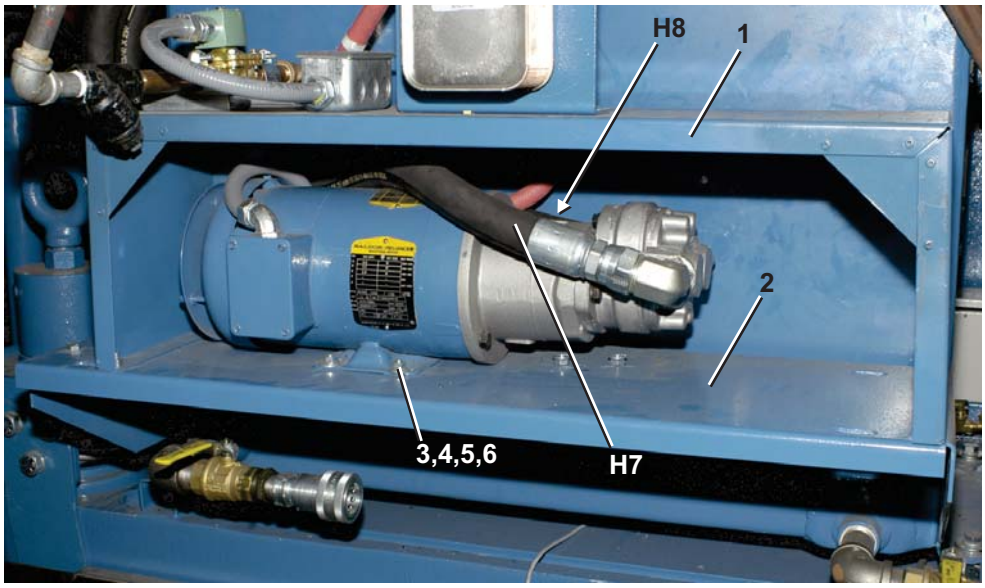

Alternate Cooler Pump Mounting 04/2016

Oil Cooler - Water Cooled

MP1540, MP1640, MP1556, MP1656, MP1A50
MPL550, MPL556, MPL640, MPL650, MPL656

Figure 2

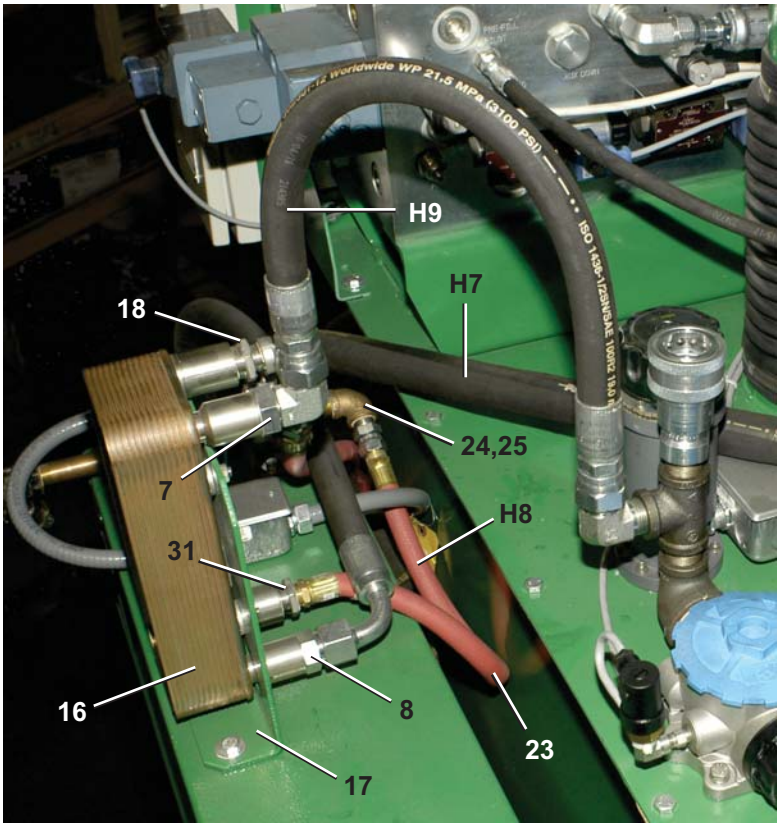

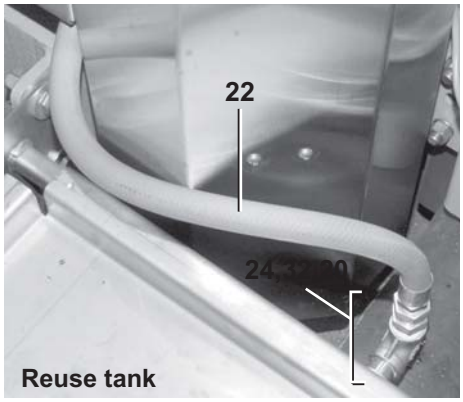

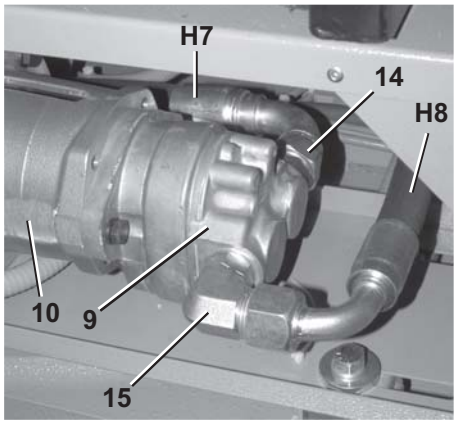

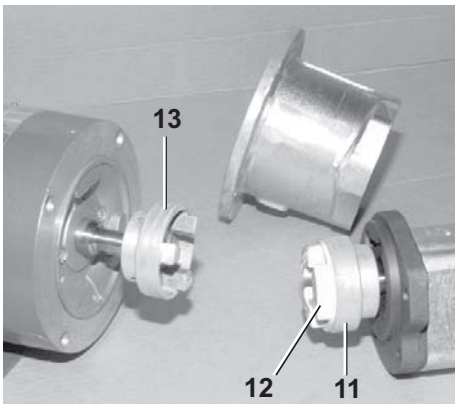

Cooler Pump Coupling Assembly

Oil Cooler - Water Cooled

MP1540, MP1640, MP1556, MP1656, MP1A50
MPL550, MPL556, MPL640, MPL650, MPL656

Parts List—Oil Cooler - Water Cooled

Find the correct assembly first, then find the needed components. The item letters (A, B, C, etc.) assigned to assemblies are referred to in the "Used In" column to identify which components belong to an assembly. The item numbers (1, 2, 3, etc.) assigned to components relate the parts list to the illustration.

Used In	Item	Part Number	Description	Comments
			ASSEMBLIES	
	A	AHT10045	WATER COOLED COOLER-SSPRESS	REFERENCE
	B	G80CT001	GEN ASSY COOLING TOWER	used prior to 04/2016
	C	G80CT001A	GEN ASSY COOLING TOWER	used after 04/2016
			COMPONENTS	
all	1	07 10308B	RECIRC PUMP HOUSING-TOP	
B	2	07 10796	RECIRC HOUSING BOTTOM	MP15xx, MP16xx
C	2	07 10798	RECIR HOUSING BOTTOM-MP1AXX	MP1A50
all	3	15K095	HXCPSCR 3/8-16UNC2AX1 GR5 ZINC	
all	4	15G205	HXNUT 3/8-16UNC2B ZINC GR2	
all	5	15U255	LOCKWASHER MEDIUM 3/8 ZINCPL	
all	6	15U240	FLATWASHER(USS STD) 3/8" ZNC P	
all	7	52ZJ00S009	TUBEFIT90EL3/4X5/8"FCSLO#12-10 C5OLO-S	
all	8	52ZC00S003	TUBEFIT STRTHDCN3/4"#12F5OLO-S	
all	9	27E5506	GEAR PUMP-RECIRC.PUMP-EATON	
all	10	27E5506A	PUMP TO MOTOR MOUNT	
all	11	27E5506G	COUP ASSY=5/8" BORE X 5/32" KW	
all	12	27E5506D	URETHANE INSERT FOR COUP.ASSY.	
all	13	27E5506B	COUP.ASSY=5/8"BORE X 3/16"KW	
all	14	52XY0KR050	STRDPT 3/4MX1"MJ#6400-16-12-0	
all	15	52ZC00S005	TUBEFIT 3/4"X5/8"#12-10F50L0S	
all	15	52ZJ00S007	TUBEFIT90ELFCSL3/4"#12CLO-S	
	16	27H11205	SSPRESS HEAT EXCHANGER	before 5/2014
	16	27H11206	HEAT EXCHANGER THERMAL	after 5/2014
B	17	07 10310	HEAT EXCHG MTG BRKT	used prior to 04/2016
C	17	07 10310A	HEAT EXCHG BRKT=27H11206	used after 5/2014
all	18	5N0PCLSS42	NPT NIP 3/4XCLS TBE 304SS SK40	
all	19	5SL0PBEA0K	NPTELB 90DEG 3/4X1/2 BRASS150#	
all	20	5N0KCLSS42	NPT NIP 1/2XCLS TBE 304SS SK40	
all	21	96D040FSHL	1/2" BALVAL S/S LL/HDL	
all	22	60E085C264	HOSE ASSY=1/2"X264"LG+ENDS	
all	23	60E085C20A	HOSE ASSY=1/2" X 20"LG	

Oil Cooler - Water Cooled

MP1540, MP1640, MP1556, MP1656, MP1A50
MPL550, MPL556, MPL640, MPL650, MPL656

Parts List—Oil Cooler - Water Cooled

Find the correct assembly first, then find the needed components. The item letters (A, B, C, etc.) assigned to assemblies are referred to in the "Used In" column to identify which components belong to an assembly. The item numbers (1, 2, 3, etc.) assigned to components relate the parts list to the illustration.

Used In	Item	Part Number	Description	Comments
all	24	51X017	UNIONSTRADT 1/2"#1404-8-8	
all	25	5SL0KSFA	NPTELB 90DEG 1/2 304SS 150#	
all	26	5N0K02AG42	NPT NIP 1/2X2 TBE GALSTL SK40	
all	27	96TDC2AA37	1/2"N/C2WY120V50/60C VLV(DRYVC)	
all	28	02 04302	UNISTRUT, 13/16 X 4"	
all	29	27A0100	CLP-RGDSTL PS#1100-1	
all	30	51T025	Y-STRAINER 1/2" CAST IRON	
all	31	5SB0P0KSFO	NPTHEXBUSH 3/4X1/2 SS304 150#	
all	32	5SL0KBEA	NPTELB 90DEG 1/2 BRASS 125#	
all	H7	60EH81C66A	HYD FLEX HOSE 2-STRFEMSW 1"X66"LG	
all	H8	60EH50C48D	HYD HOSE 90+STR.FMORSW 3/4"X48"LG	
all	H9	60EH50C22B	HYD HOSE 2-STRFEMSW 3/4"X22"LG	

Hydraulic Schematic - Ram Command™ (Delicate Goods) Option

Single Manifold - Ram Command™ (current)

Single Manifold design used since 2018. See AHT10065A and AHT10065B on parts list.

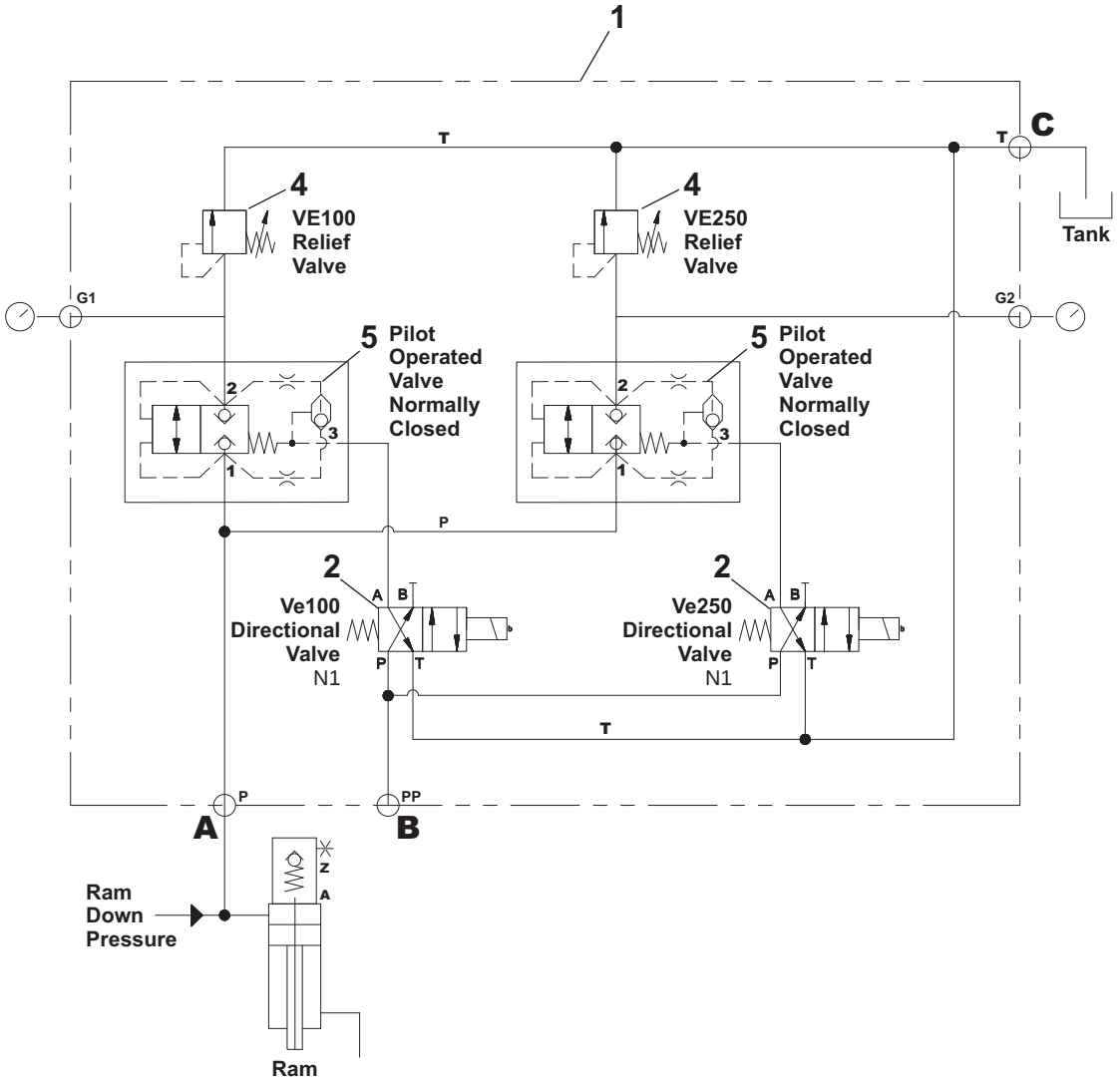

N1- Directional valves are shown de-energized.

A,B,C - See “A,B,C” on Hydraulic Schematic. See also, BPP1UH01 and BNP1UA01.

Hydraulic Schematic - Ram Command™ (Delicate Goods) Option

Multi-Manifold - Ram Command™ (obsolete)

Multi-Manifold design used till 2018. See AHT100065 on parts list.

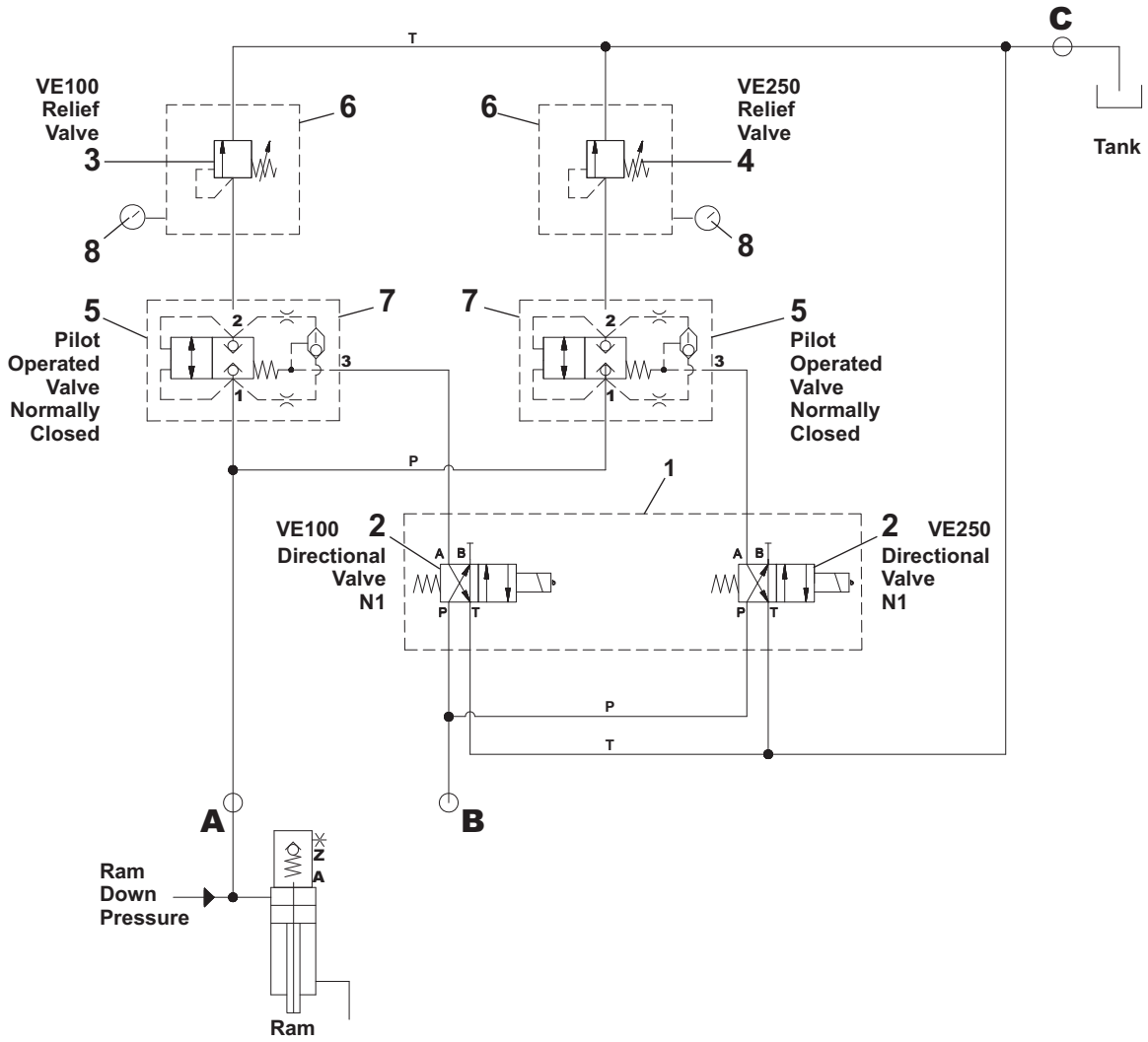

N1- Directional valves are shown de-energized.

A,B,C - See “A,B,C” on Hydraulic Schematic. See also, BPP1UH01 and BNP1UA01.

Hydraulic Schematic - Ram Command™ (Delicate Goods) Option

Parts List—Hydraulic Schematic Delicate Goods

Find the correct assembly first, then find the needed components. The item letters (A, B, C, etc.) assigned to assemblies are referred to in the "Used In" column to identify which components belong to an assembly. The item numbers (1, 2, 3, etc.) assigned to components relate the parts list to the illustration.

Used In	Item	Part Number	Description	Comments
			----REFERENCE ASSEMBLIES----	
	A	AHT10065	DELICATE GOODS RELIEF VALVES ASSY	MP15_, MP16_, MP1A_ BEFORE 2018
	B	AHT10065A	DELICATE GOODS ASSY FOR 96DH463 MANF	MP15_, MP16_, MPL550, MPL650, MPL656 SINCE 2018
	C	AHT10065B	DELICATE GOODS ASSY 96DH462A 96DH464	MP1A50 SINCE 2018
			----COMPONENTS----	
A	1	96DH486	MANIFOLD DAMAN DD03P022S	
B,C	1	96DH481	MANIFOLD DELICATE GOODS SUN # FV 12455 V1 PPP	
ABC	2	96RH712A02	DIRECTIONAL PILOT VALVE+SOL 24VDC	
A	3	96DH497	VALVE DIRECT RELIEF RDFA-LSN	
A,B,C	4	96DH496	VALVE DIRECT RELIEF RDFA-LEN	
A,B,C	5	96DH498	VALVE CARTRIDGE SUN #LOFD XDN	
A	6	96DH493	BODY, SUN BCLS	
A	7	96DH495	BODY, STEEL SUN CAM/S	
A	8	30N125W	WIKA GAGE 7/16-20SAE 2000PSI/B	

Delicate Goods Option (Ram Command™ Ram Control)

MP1540, MPL640, MP1650, MPL556, MPL656, MP1A50

Figure 1. Delicate Goods Manifold

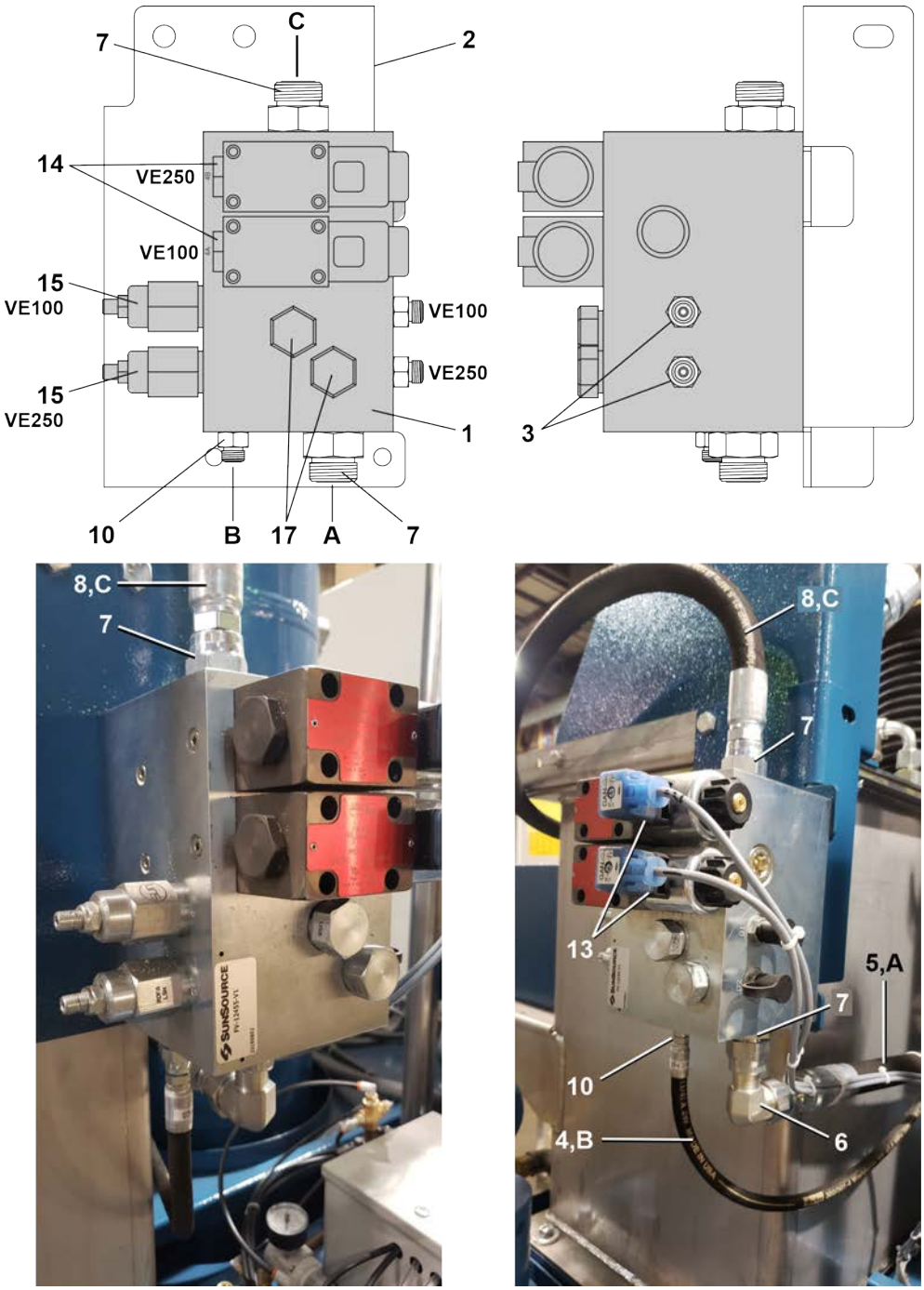

Legend

A . . . To AUX DOWN (Auxiliary Ram Down) on main manifold
B . . . System Pressure
C . . . To T2 (Drain)

Delicate Goods Option (Ram Command™ Ram Control)

MP1540, MPL640, MP1650, MPL556, MPL656, MP1A50

Figure 2. Main Manifold Connections

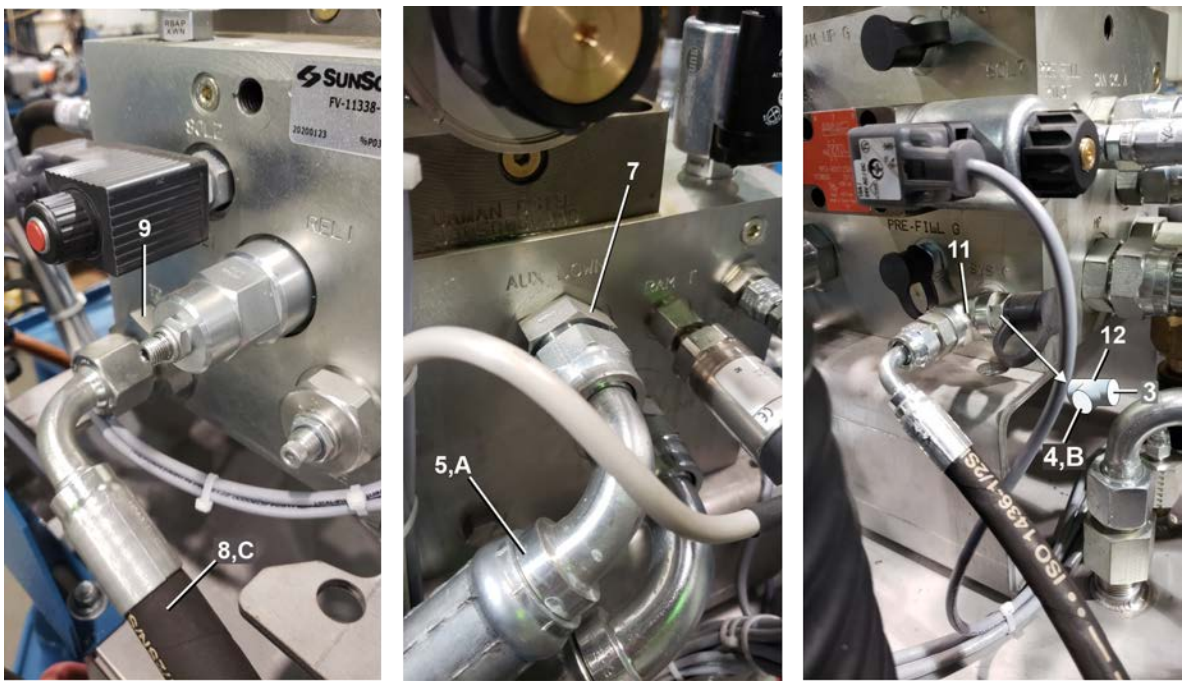

Legend

A . . . To AUX DOWN (Auxiliary Ram Down) on main manifold
B . . . System Pressure
C . . . To T2 (Drain)

Table 1. Parts List—Delicate Goods Option (Ram Command™ Ram Control)

Find the assembly for your machine and the letter shown in the "Item" column. The components for your machine will show this letter or the word "all" in the "Used In" column. The numbers shown in the "Item" column are those shown in the illustrations.

Used In	Item	Part Number	Description/Nomenclature	Comments
Reference Assemblies				
	A	AHT10065A	DELICATE GOODS ASSY FOR 96DH463 MANIFOLD	MP1540, MP1640 MP1650
	B	AHT10065B	DELICATE GOODS ASSY 96DH462A 96DH464	MPL556, MPL656, MP1A50
Components				
A,B	1	96DH481	MANIFOLD DELICATE GOODS SUN # FV 12455 V1 PPP	
all	2	07 10801	MANIFOLD BRKT	
all	3	52XY0KP001	TESTPORT QUICKCONN-MALE #PD361	
all	4	60EH21C48A	ASSY=HYDRAULIC HOSE 1/4"X48"LG	
all	5	60EH51C57B	HYDHOSE 3/4"STRFEMORSWX3/4"90FEMORSW=57"	
all	6	52ZJ00S006	TUBEFIT90EL3/4"#12 C6LO-S	
all	7	52ZC00S004	TUBESTRCON3/4X1"OR#12-16 F5OLO-S	
all	8	60EH50C60A	HYD.HOSE 3/4"+90FSWXFORSW=60"	
all	9	52ZC1ES004	TUBEFITSTRTHD 3/4"X1.25" #12-20 F5OLO-S	
all	10	52ZC0ES003	TUBEFITSTR1/4X3/8#4-6 F5OLO-S	

Delicate Goods Option (Ram Command™ Ram Control)

MP1540, MPL640, MP1650, MPL556, MPL656, MP1A50

Parts List—Delicate Goods Option (Ram Command™ Ram Control) (cont'd.)

Find the assembly for your machine and the letter shown in the "Item" column. The components for your machine will show this letter or the word "all" in the "Used In" column. The numbers shown in the "Item" column are those shown in the illustrations.

Used In	Item	Part Number	Description/Nomenclature	Comments
all	12	52ZT00S005	TUBEFIT TEE 1/4" PARKER #4 R6LO-S	
all	13	12M348V9F	SOLE.CONN.6-48VDC/VAC 5M	
all	14	96RH712A02	DIRECTIONAL PILOT VALVE+SOL 24VDC	Part of item 1
all	15	96DH496	VALVE DIRECT RELIEF RDFA-LEN	Part of item 1
all	17	96DH498	VALVE CARTRIDGE SUN #LOFD XDN	Part of item 1

RAM Command™ Option Adjustment

BNP1UA01.C01 0000278199 D.2 C.5 3/21/22 11:07 AM Released

This document applies to all 1-station press models available with the RAM Command™ option (also called the delicate goods option and formerly called *soft squeeze*). It applies to current production presses with the single manifold hydraulic piping design as well as to older presses with the multi-manifold design.

The document addresses two on-site activities that can be needed:

- Set RAM Command™ pressures either to use different pressures than those set at the factory or because components were replaced.
- Disable the RAM Command™ option to make it easier to troubleshoot the hydraulic system.

NOTICE: Understand the press servicing hazards. Do this procedure only if you understand and work with hydraulic systems. Review the press safety guide and the safety information in the parts and service manual.

1. Concept of Operation

BNP1UA01.C06 0000278753 D.2 B.3 3/21/22 11:14 AM Released

In summary, the RAM Command™ system applies a very gradual build-up of pressure, which gives sensitive goods time to release water without damage. This system pressurizes the ram in a timed sequence of low, but increasing pressure steps. The factory-set pressures can be reset by the customer. The step durations are specified in programmable press codes.

NOTE: Refer to document BMP1400021 “Hydraulic Schematic - RAM Command™...” in the service manual to assist in understanding this information.

The system uses two electrically operated valves, each with an associated pilot operated valve and an adjustable relief valve.

When a RAM Command™ press code is not in effect, valve VE100 and valve VE250 are de-energized, both pilot operated valves are closed, blocking ram pressure to relief valves. The press will operate at standard pressure.

When a RAM Command™ press code is in effect, the RAM Command™ system builds up ram down pressure in a four step sequence, as follow:

1. Valve VE100 is energized, the associated pilot operated valves open allowing flow to the relief valve. Ram down pressure will be at this relief valve setting. Valve VE100 remains open for the Timer A duration then closes.
2. Valve VE250 is energized, the associated pilot operated valves open, allowing flow to the relief valve. Ram down pressure will be at this relief valve setting. Valve VE250 remains open for the Timer B duration then closes.
3. The ram down pressure increases to standby pressure for the Timer C duration..
4. The RAM Command™ sequence ends and standard pressures take effect.

NOTE: On machines with the RAM Command™ option, the standard ram up relief pressure is permanently set to 950 psi. This pressure is set to 1500 psi on machines without the option. Although this setting is determined by whether or not the machine has the RAM Command™ option, it is otherwise, independent of the RAM Command™ system.

2. How RAM Command™ Press Codes Work

BNP1UA01.C02 0000278198 D.2 B.3 3/12/20 4:12 PM Released

When you apply the RAM Command™ function to a press code, the pressing cycle begins with a sequence of three low, but increasing pressure steps. The press code controls the length of time that each pressure will occur, but not the pressures themselves. The times appear on the press code screen as Timers A, B and C, shown at the bottom left of the figure below. You can specify up to 99 seconds for each timer. A value of 00 for any timer causes the machine to skip that pressure step and proceed to the next pressure.

Figure 1. Enter time values in the fields for Timers A, B, and C at the bottom left of the screen.

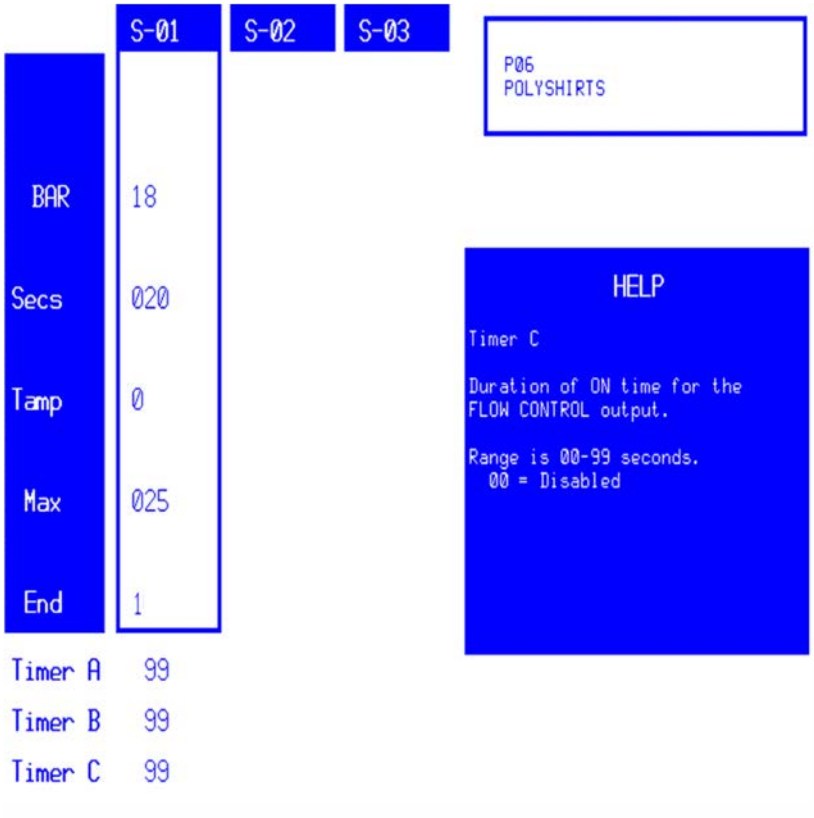

3. Pressure Adjustment Preparations

BNP1UA01.R01 0000278778 D.2 B.3 3/21/22 9:28 AM Released

When To Adjust Pressures — If you replace pressure components, it can be necessary to re-establish all hydraulic pressures, including the RAM Command™ pressures on site. If you wish to use pressure values different from the factory settings, you can change the Timer A and Timer B pressures without affecting the standard pressures.

Pressure Adjustment Rules

- Timer A pressure must be lower than Timer B pressure.
- The Timer A and Timer B pressures must not exceed standby pressure (400 or 500 psi, depending on model).

Requirements

Tools Each relief valve has a locknut and an adjustment screw. Provide a 9/16" wrench for the locknut and a 5/32" Allen wrench for the adjustment screw. Also provide a safe platform to work at the location of the valves. on newer press models, the pressure gauges are not permanently attached; however, the necessary pressure gauges are provided with the machine. Make sure these gauges are on hand.

Two personnel One person (referred to herein as the **operator**) starts and stops the press code at the operator controls. The other person (referred to herein as the **technician**) makes the adjustments at the valves. The personnel must be able to clearly communicate with each other. Review this instruction to understand the necessary coordination between the operator and the technician.

Adjustment press code Create a dedicated press code or temporarily modify an existing press code that you will use to make the adjustments. **You must do these pressure adjustments with goods in the machine** and a press code running in automatic, and you must do each adjustment during the programmed time that the valve is energized. For this reason, temporarily set the Timer A and Timer B durations to the maximum value (99 seconds). The only important part of this press code is the Timer A and Timer B values. See the 1-station press reference manual for general programming information.

Press loaded If you cannot do these procedures with an actual load of goods while production is paused, load and wet down a batch of goods in the press by any safe means.

TIP: Electrical schematics W6PM1SSQ and W6PM1SVSB in the 1-Station press schematic manual and parts document BPP1UH01 “Delicate Goods Option (RAM Command™ Ram Control)” in the parts and service manual can assist with troubleshooting the Ram Command system.

RAM Command™ Factory Specifications

Table 1. Factory Specifications

Model Family	MP1540	1550	1556	1640	1650	1656	1A50
Bar Rating	40	50	56	40	50	56	50
Ram Bore (inch)	14	14	14	14	16	16	17
Settings (PSI)							

Factory Specifications (cont'd.)

Model Family	MP1540	1550	1556	1640	1650	1656	1A50
Standby* (Timer C)	500	500	500	500	400	400	525
Ram Up Relief	950	950	950	950	950	950	950
Valve A (VE100) (Timer A)	220	220	220	250	200	200	275
Valve B (VE250) (Timer B)	320	320	320	375	300	300	390
* Standby pressure is also referred to as idle pressure or ram down relief pressure.							

4. Pressure Adjustment Operator Procedure

BNP1UA01.C04 0000278269 D.2 C.3 3/21/22 9:12 AM Released

This is a brief explanation. Review the 1-station press reference manual if necessary.

1. When a suitable batch is in the press, put the tunnel in hold to suspend production.
2. Set the press to Manual mode then return it to Automatic mode to initiate the sequence of operator prompts. Respond to the prompts as appropriate. In particular:
   a. Answer yes to "Does press have a cake?"
   b. At the Cake Data screen, leave all data as displayed except for the press code. Take note of the press code assigned to this batch then change it to the adjustment press code that you prepared.
   c. When the technician is ready, answer no to "Discharge cake in can?" The machine will operate and permit the technician to do the adjustments explained in Section 5 : Pressure Adjustment Technician Procedure, page 4.
3. When valve VE250 de-energizes (which ends the available adjustment time) and before the press code is complete, set the machine to Manual mode then return it to Automatic mode. If the adjustments are not complete, respond to the prompts the same way as before to restart the adjustment press code. Otherwise, respond as appropriate to resume production and permit this batch to process according to its actual press code.

5. Pressure Adjustment Technician Procedure

BNP1UA01.C05 0000278268 D.2 3/21/22 9:23 AM Released

This instruction tells how to set the first two pressures (for Timers A and B). The third pressure (for Timer C) is idle (standby) pressure, which is a standard pressure. The procedure to set idle pressure is explained in document BIPPMT02 “Set Standard and Booster Pump Pressures–1-station Press”.

You adjust the pressures for Timers A and B on the relief valves associated with the electrically operated hydraulic valves VE100 and VE250 (see the figure below).

Figure 2. RAM Command™ System Hydraulic Adjustment Components

Views of Adjustment Components on Single-manifold Presses (assembly AHT10065A)

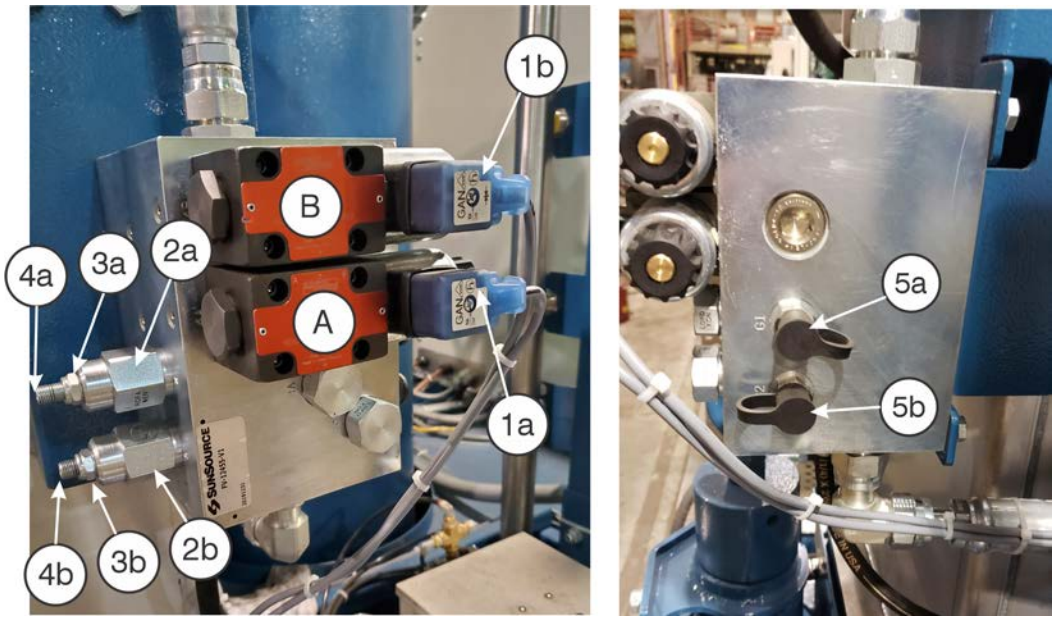

Views of Adjustment Components on Multi-manifold Presses (assembly AHT10065)

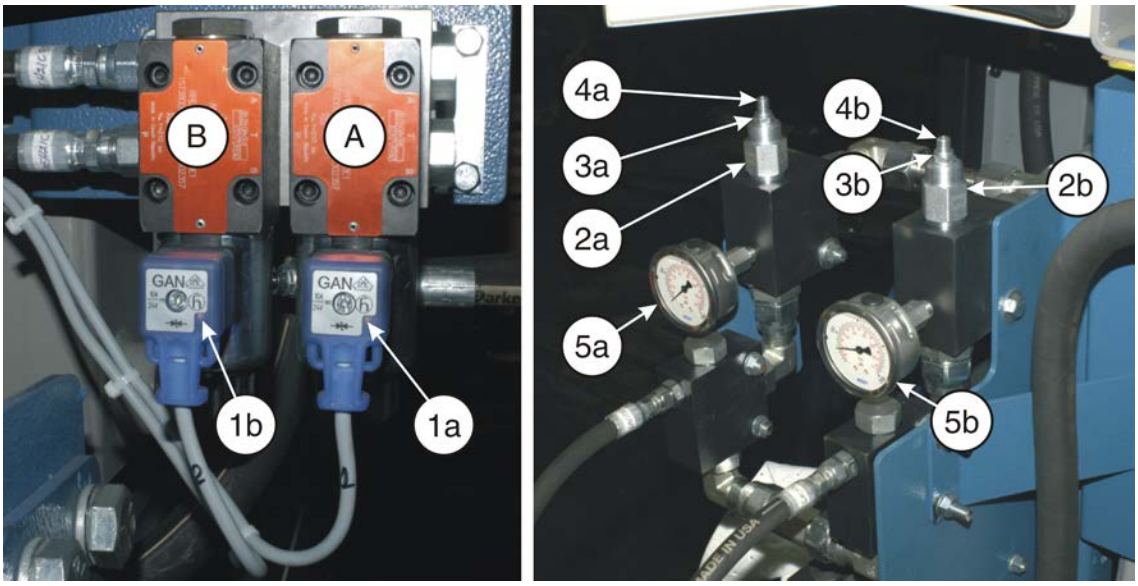

Legend

A	Valve VE100 (electrically operated hydraulic valve for Timer A pressure).
B	Valve VE250 (electrically operated hydraulic valve for Timer B pressure).
1a,1b	Light on electric connector. **Light on=valve energized**. **Light off=valve de-energized**. All "_a" items are for the Timer A pressure adjustment. All "_b" items are for the Timer B pressure adjustment.
2a,2b	Relief valve that must be adjusted for the factory pressure specified in RAM Command™ Factory Specifications or the customer-defined pressure.
3a,3b	Lock nut (9/16" hex)
4a,4b	Adjustment screw (5/32" Allen)
5a,5b	Pressure gauge connection point or pressure gauge. Read the pressure here during adjustment.

NOTICE: These adjustments are done with the machine in automatic operation.

- Do not use the maintenance key to set the machine to Maintenance mode.

Refer to Figure 2, page 5. The lowest pressure adjustment is the relief pressure for valve A (VE100). This is the Timer A pressure. The adjustment components are those with "_a" item numbers in Figure 2, page 5. Adjust as follows:

1. When the operator starts the adjustment press code, observe light 1a. Wait for the light to illuminate to indicate that valve VE100 is energized. This will occur when the descending ram clears the PXSM proximity switch (ram in container).
2. Loosen locknut 3a. Observe pressure gauge 5a and turn adjustment screw 4a until the gauge displays the pressure that you previously determined. If you cannot complete the adjustment in the 99 seconds that valve VE100 is de-energized (that the light is off), have the operator repeat the adjustment press code.
3. When the relief valve is correctly adjusted, tighten locknut 3a. The second lowest pressure adjustment is the relief pressure for valve B (VE250). This is the Timer B pressure. Adjust this pressure the same way as above. The adjustment components are those with "_b" item numbers in Figure 2, page 5.

6. Disconnect the RAM Command™ System for Ease of Troubleshooting

BNP1UA01.C07 0000278775 D.2 A.3 3/12/20 4:21 PM Released

If it is necessary to troubleshoot the press hydraulic system, it can help to isolate the RAM Command™ manifold from the rest of the system. This is done by installing plugs at two hydraulic line connection points on the main manifold. The plugs are available from the Milnor® Parts department. The plug locations and part numbers are given in the figure below.

Figure 3. Plug Locations on the Main Manifold

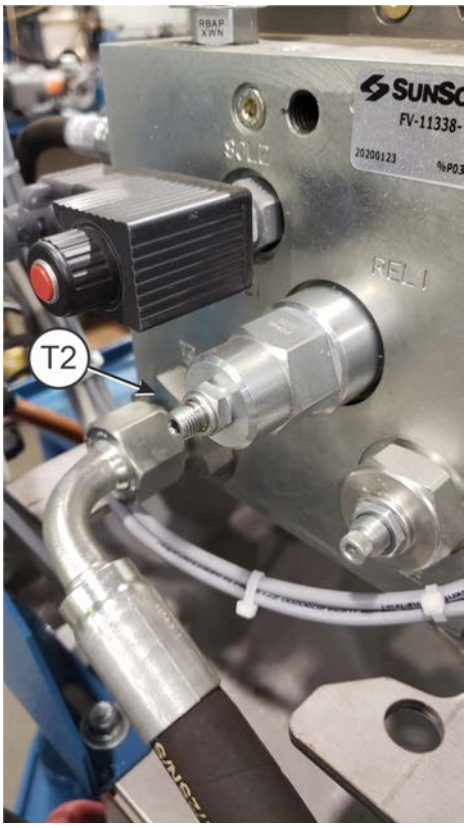

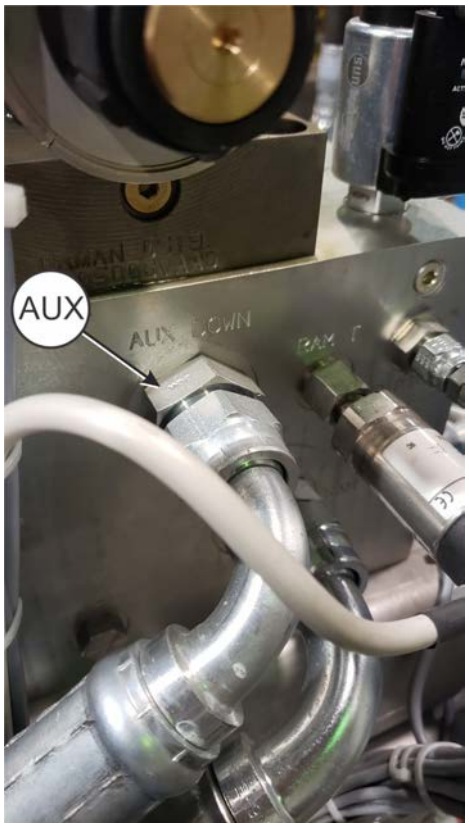

Legend

T2 . . Disconnect and plug port T2. Use 1.25” hex plug (p/n 52PY0GR004)

AUX . . Disconnect and plug port AUX DOWN. Use 1” hex plug (p/n 52PY1AR001)

End of document: BNP1UA01

Pellerin Milnor Corporation
P. O. Box 400, Kenner, LA 70063-0400

Litho in U.S.A.

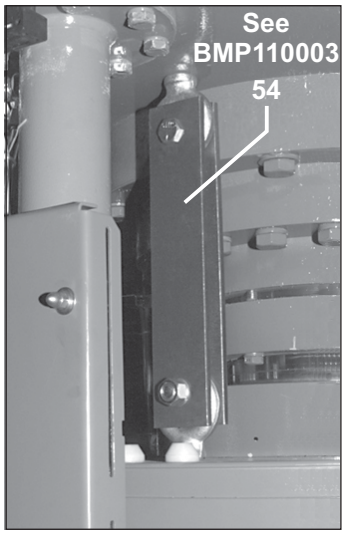

Diaphragm Safety Bar:
(Install before servicing.
See BIUUUS27, Safety for Service Personnel.)

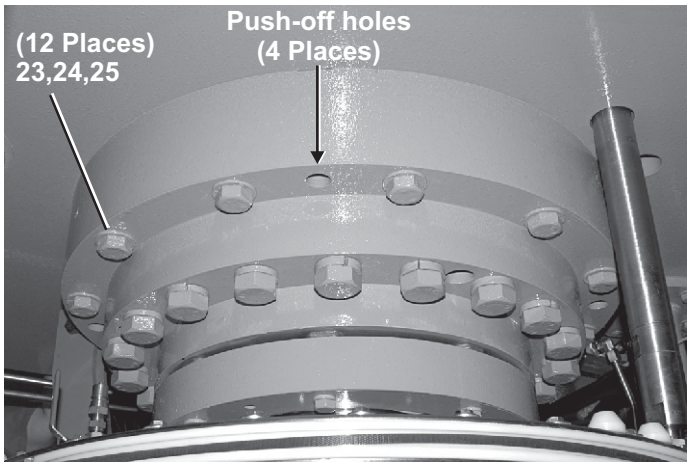

Figure 1: Hydraulic Ram to Upper Press Weldment (See Detail A.)

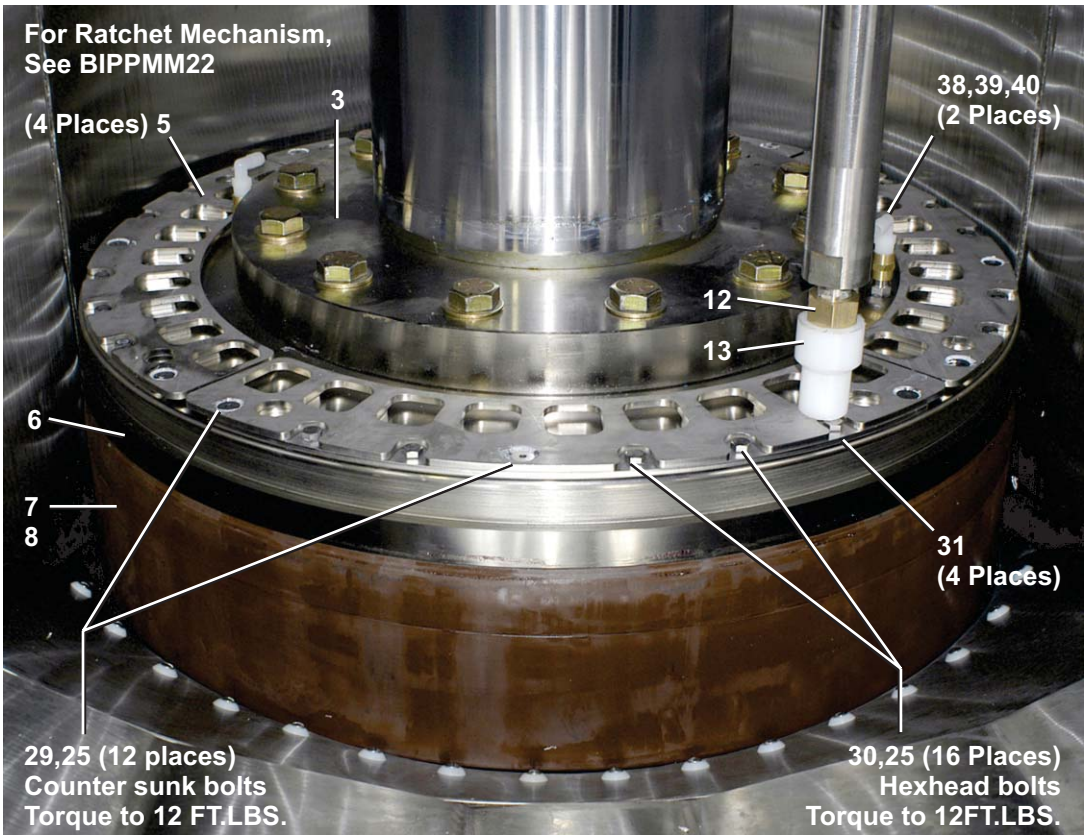

Figure 2: Upper Diaphragm

Hydraulic Ram and Diaphragm

MP1540, MP1556, MP1640, MP1656, MP1A56
MPL556, MPL640, MPL656

Pellerin Milnor Corporation
P. O. Box 400, Kenner, LA 70063-0400

Litho in U.S.A.

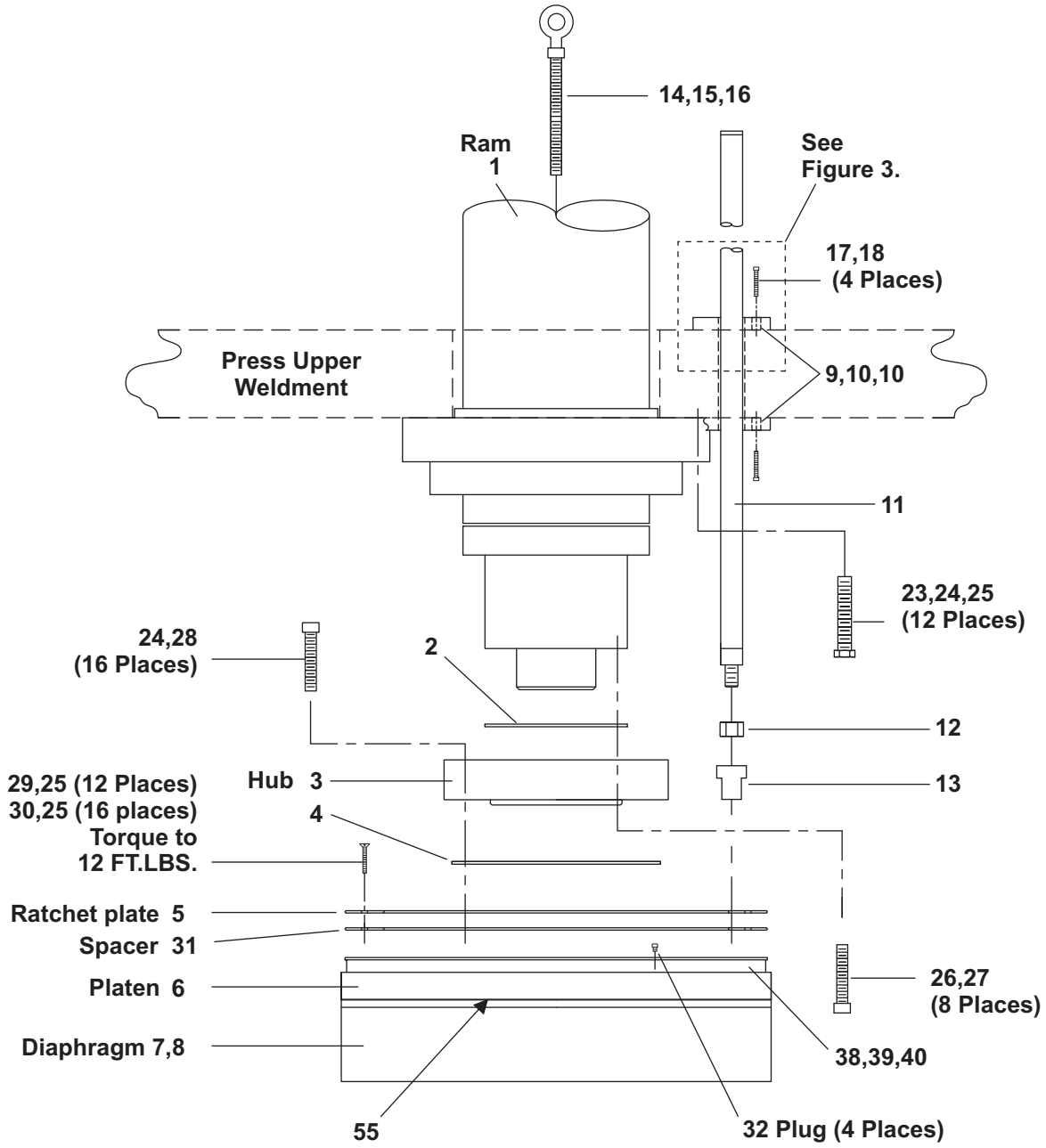

Apply Loctite Gasket Eliminator to the metal ring of the diaphragm that touches the platen, before mating these components.

Detail A

Hydraulic Ram and Diaphragm

MP1540, MP1556, MP1640, MP1656, MP1A56
MPL556, MPL640, MPL656

Pellerin Milnor Corporation
P. O. Box 400, Kenner, LA 70063-0400

Litho in U.S.A.

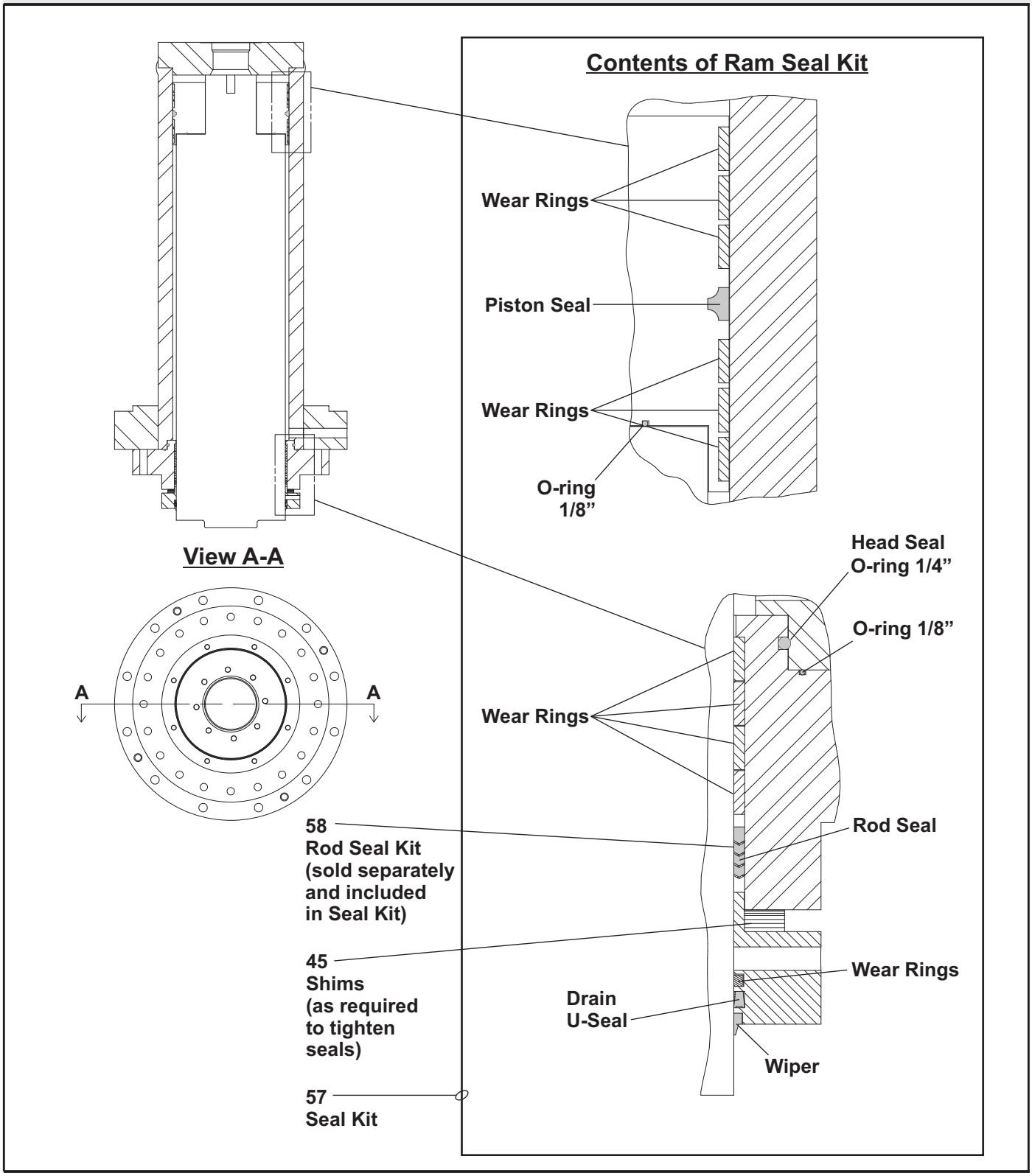

Pellerin Milnor Corporation
P. O. Box 400, Kenner, LA 70063-0400

Litho in U.S.A.

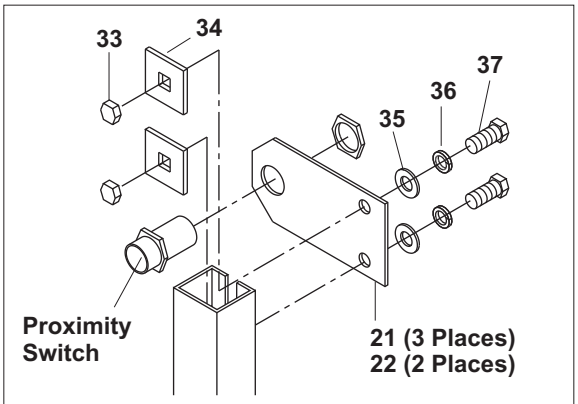

Detail B: Proximity Switch Mounting

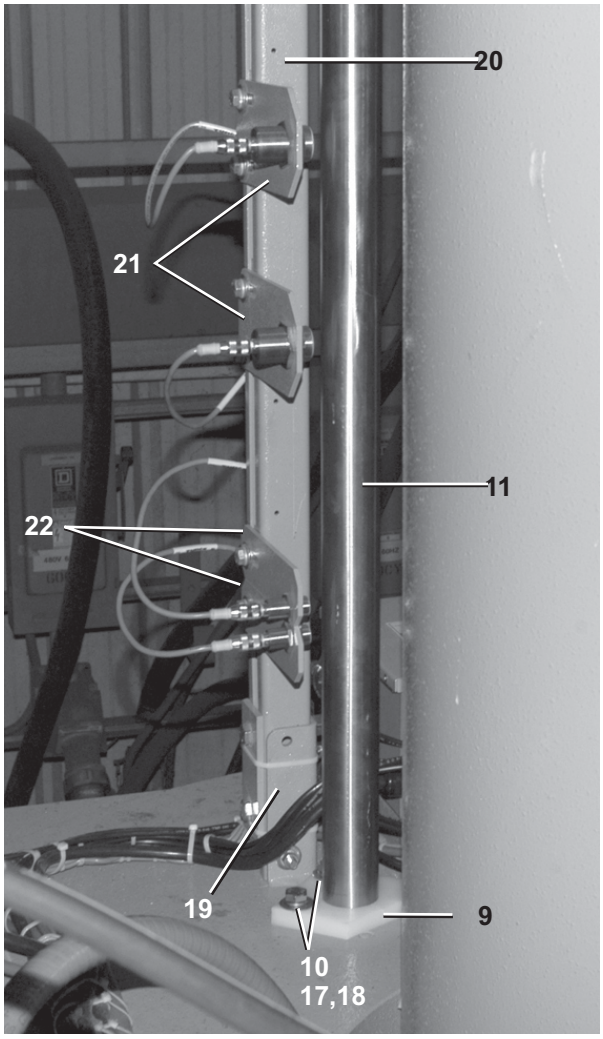

Figure 3: Proximity Switch Mounting Post

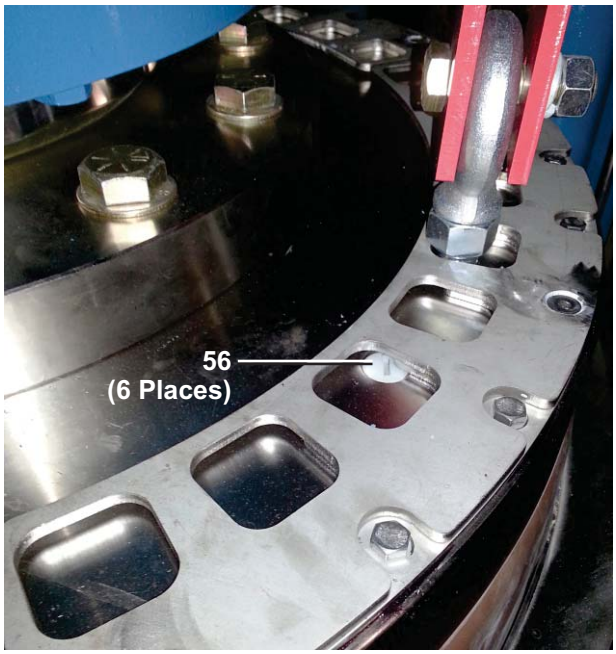

Figure 4: Platen plugs

Pellerin Milnor Corporation
P. O. Box 400, Kenner, LA 70063-0400

Litho in U.S.A.

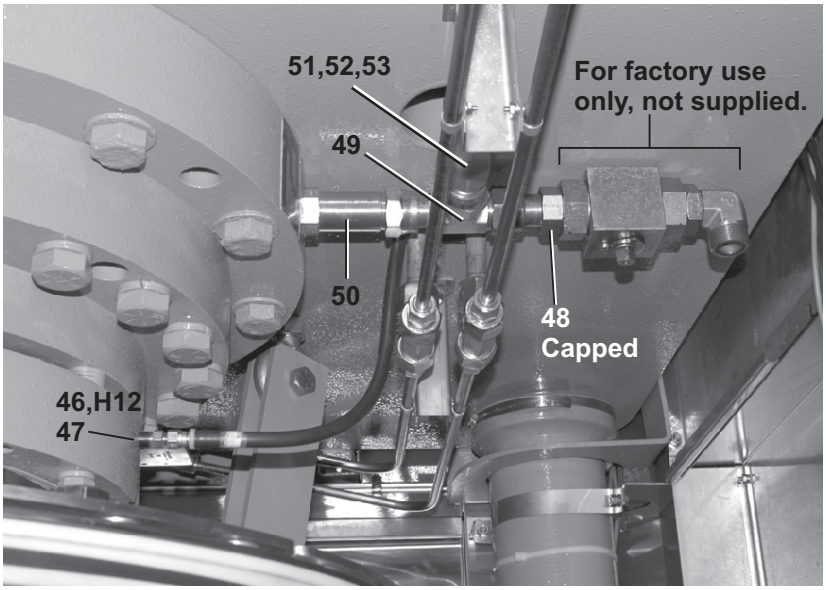

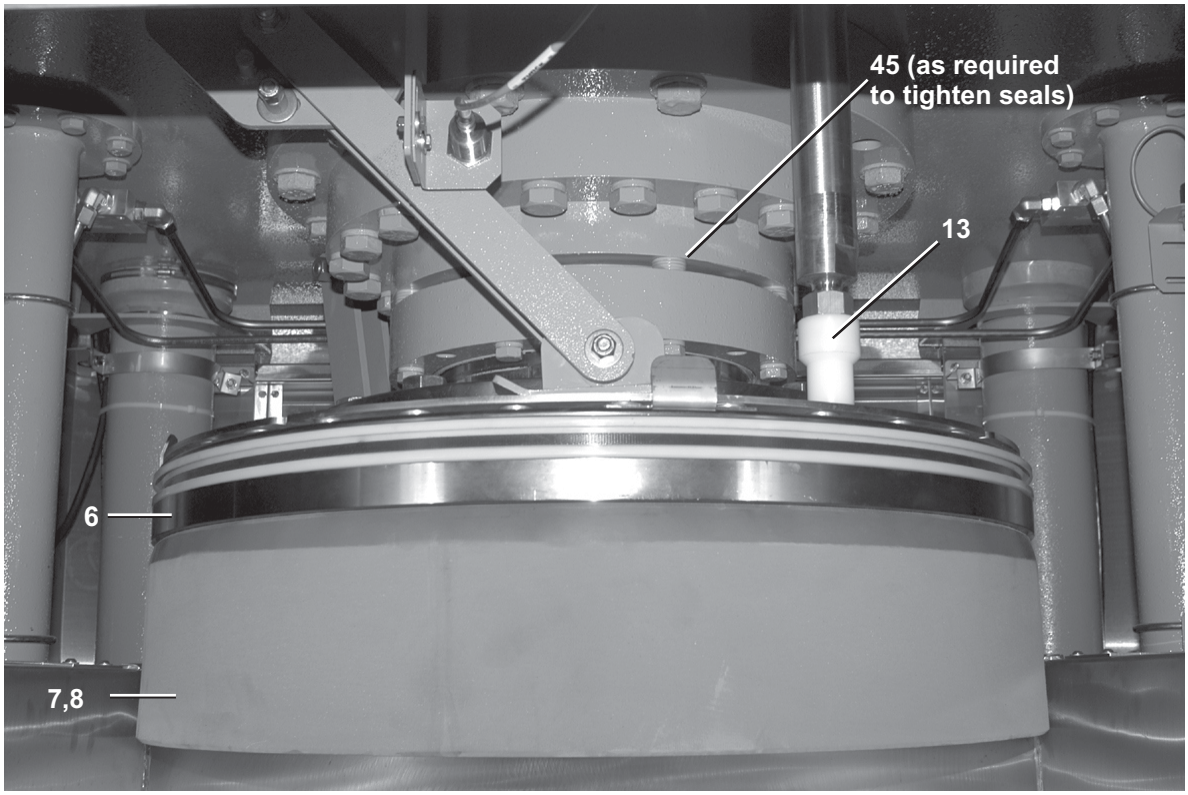

Figure 4: Hydraulic Ram and Diaphragm

Hydraulic Ram and Diaphragm

MP1540, MP1556, MP1640, MP1656, MP1A56
MPL556, MPL640, MPL656

Parts List—Hydraulic Ram and Diaphragm

Find the correct assembly first, then find the needed components. The item letters (A, B, C, etc.) assigned to assemblies are referred to in the "Used In" column to identify which components belong to an assembly. The item numbers (1, 2, 3, etc.) assigned to components relate the parts list to the illustration.

Used In	Item	Part Number	Description	Comments
-----MODEL REFERENCES-----				
	A	MP1540B	MP1540 40 BAR PRESS BASE MODEL	MP1540, MP1550
	B	MP1556B	MP1556 56 BAR PRESS BASE MODULE	MP1550, MP1556 MPL556
	C	MP1640B	MP1640 40 BAR PRESS BASE MODULE	MP1640, MPL640
	D	MP1656B	MP1656 56 BAR PRESS BASE MODEL	MP1650, MP1656, MPL650, MPL656
	E	MP1A56B	MP1A56 56BAR BASE MODULE	MP1A50, MP1A56
AB	F	GHC10004	DIAPHRAGM/PLATEN INST-MP1556	
CD	G	GHC10002	DIAPHRAGM/PLATEN INST-MP16XX	
E	H	GHC10003	DIAPHRAGM/PLATEN INST-MP1AXX	
-----COMPONENTS-----				
A	1	27E1613391	HYD.RAM 13"BORE X 39" STROKE CATIC	
BC	1	27E161439A	RAM 14"BORE X 39"STK W/SIDEPORT	
D	1	27E161639A	RAM 16"BORE X 39"STK W/SIDEPORT	
E	1	27E161749A	RAM 17"BORE X 49"STK W/SIDEPORT	
all	2	60C180V	ORING 11"IDX1/8CS V70D#276	
ABCD	3	X7 10040C	PLATEN HUB MACHINED-47BAR	
E	3	X7 10034	PLATEN HUB MACHINE-48"MEMBRANE	
ABCD	4	60C193A	ORING 22"ID 1/4CS BUNA70-471	
E	4	60C193B	ORING 26"ID 1/4CS BUNA70-475	
AB	5	07 10571A	DIAPHRAGM ROTATING PL-MP1550	
CD	5	07 10571	DIAPHRAGM ROTATING PLATE	
E	5	07 10602	DIAPHRAGM ROTATING PLATE-MP1A03	
AB	6	X7 10068	MEMBRANE PLATEN 900MM	
CD	6	X7 10052	MEMBRANE PLATEN SSPRESS	
E	6	X7 10035	PLATEN SSPRESS-48" MEMBRANE	
AB	7	ACW10003R	MEMBRANE/RING ASSY 900MM SBR	
CD	7	ACW10001R	MEMBRANE/RING ASSY 40" SBR	
E	7	ACW10002	MEMBRANE/RING ASSY 48"	
AB	8	ACW10012A	GUM RUBBER 11PCS SET-36MEM	
CD	8	ACW10010A	GUM RUBBER 11PCS SET-40MEM	
E	8	ACW10011A	GUM RUBBER 11PCS SET-48MEM	
all	9	07 10581	DIAPHRAGM ROD LOWER GUIDE	
all	10	27B34010SS	SPACERROLL .51ID.625L.062T SS	
ABCD	11	X7 10254	DIAPH ROD 1-8UN MACHINED	
E	11	X7 10383	MEMBRANE GUIDE ROD-MP1A03	
all	12	15G250B	HEXNUT 1-8UNC2B BRASS	
all	13	X7 10250	GUIDE ROD UHMW BASE	
all	14	17A122	EYE NUT 1.25-7 GAL. STEEL	
all	15	17R125A14K	1-1/4-7X14 STUD B7 BLK.	
all	16	15G260	HXNUT 1+1/4-7UNC2B BLK GR2	
all	17	15K151	HXCAPSCR 1/2-13UNC2AX1.25 GR5	
all	18	15U300	LOKWASHER REGULAR 1/2 ZINC PLT	
all	19	07 10264	DIAPH POST MTG PLATE	
ABCD	20	07 10258	DIAPHRAGM POSITION PROX.SW POST	
E	20	07 10258A	DIAPHRAGM PROX.SW POST-MP1A03	

Parts List—Hydraulic Ram and Diaphragm

Find the correct assembly first, then find the needed components. The item letters (A, B, C, etc.) assigned to assemblies are referred to in the "Used In" column to identify which components belong to an assembly. The item numbers (1, 2, 3, etc.) assigned to components relate the parts list to the illustration.

Used In	Item	Part Number	Description	Comments
all	21	07 10265	DIAPHRAGM PROX.SW PLATE	
all	22	07 10265A	DIAPHRAGM PROX.SW PL 2"W	
ABC	23	X7 10504	RAM BOLT 1-14X5"CHASED THREAD	
DE	23	X7 10505	RAM BOLT 1-14X7"CHASED THREAD	
all	24	15U393	FLTWASH 1" HARD ASTM F436	
all	25	20C510	LOCTITE MOLYPASTE#51048	
ABCD	26	15K234B	HXCAPSCR 3/4-16UNFX3+1/2" GR8	
E	26	15K234C	HXCAPSCR 3/4-16UNFX5+1/2" GR8	
all	27	15U321H	FLTWASH 3/4 HARD ASTM F436	
ABCD	28	15K303	HEXCAPSCR 1-14X4 GR8 ZINC	
E	28	15K300A	HEXCAPSCR 1-14X5.5 GR8 ZINC 14TPI	
ABCD	29	15N230	FLTHDSOKSCR 3/8-16UNC 4"LG SS	
E	29	15N231	FLTHDSOKSCR 3/8-16UNC 5"LG SS	
all	30	15K136S	HEXCAPSCR 3/8-16 X 3.5 SS18-8	
AB	31	07 10674	DIAPHRAGM PLATE SPACER-MP15XX	
CD	31	07 10673	DIAPHRAGM PLATE SPACER-MP16XX	
E	31	07 10675	DIAPHRAGM PLATE SPACER-MP1AXX	
all	32	52PY0GR002	HEXPLUG 3/8"XOR#6-P50N-SS	
all	33	17N070AP	RETAIN NUT#S10222-27	
all	34	02 11942	H20 BRKT JAM PLATE 36/42QU	
all	35	15U240	FLATWASHER(USS STD) 3/8" ZNC P	
all	36	15U255	LOCKWASHER MEDIUM 3/8 ZINCPL	
all	37	15K095	HXCPSCR 3/8-16UNC2AX1 GR5 ZINC	
all	38	51E509NA	ELB90 HOSEADPT 1/2HX3/8T NYL	
all	39	5SCC0GBE	NPT COUP 3/8 BRASS 125# 103A-C	
all	40	52AY0GR007	MPADPT.3/8"XOR#6-3/8F50F-SS316	
all	45	07 10237	SHIM=RAM SEAL-.050	
ABCD	46	60E076B078	HOSE ASSY 1/4"X78"LG+ENDS	
E	46	60E076B108	HOSE ASSY 1/4"X108"LG+ENDS	
all	47	52AY0ER008	STR.1/4"MJIC X MP #2404-4-4	
all	48	52ZN1AS003	TUBEFIT NUT+CAP #16-FNL-S	
all	49	52ZT1AS003	TUBEFIT TEE 1" PARKER#16 R6LO-S	
all	50	52ZC1AS002	TUBEFITLGSTRTHDCON 1"#16 FF5OLO-S	
all	51	52ZJ1AS002	TUBEFIT90ELSWNT1" #16 C6LO-S	
all	52	87Z1X095	TUBE 1"ODX.095WL 304SMLS *	
all	53	52ZN1AS001	TUBEFIT 1"NUT #16-BL-S	
AB	54	AHT10030	MEMBRANE SAFETY BAR-MP1603	
CD	54	AHT10030A	MEMBRANE SAFETY BAR-MP1604	
E	54	AHT10030B	DIAPHM SAFETY BAR ASSY-MP1A03	
all	55	20C013B	GASKET ELIMINATOR LOC.#51580	
all	56	15Q125A	GRUB SCREW NYLON 1-8X5/8	
ABC	57	27E161439C	CRC SEAL KIT #SK-2140	
D	57	27E161639C	CRC SEAL KIT FOR REBUILT HSI 27E161639	
E	57	27E161749C	CRC SEAL KIT #SK-2305	

Parts List—Hydraulic Ram and Diaphragm

Find the correct assembly first, then find the needed components. The item letters (A, B, C, etc.) assigned to assemblies are referred to in the "Used In" column to identify which components belong to an assembly. The item numbers (1, 2, 3, etc.) assigned to components relate the parts list to the illustration.

Used In	Item	Part Number	Description	Comments
ABC	58	27E167022A	FAB VEE PACK 13 INCH ID X.5 INCH FOR 27E161439	
D	58	27E167032A	FAB VEE PACK 15 INCH ID X .5 INCH FOR 27E161639	
E	58	27E167736A	FAB VEE PACK 15.5 INCH ID X .5 INCH FOR 27E161749	
	H12		FOR HYDRAULIC HOSE, SEE BMP200015.	

Ratchet Mechanism to Turn the Diaphragm—Components and Adjustment

1. Component Identification

Figure 1: Thrust Arm Assembly

Primary Components

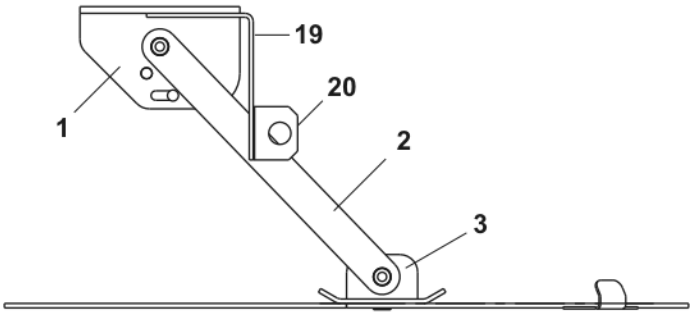

Legend

AA.	See Figure 2
E.	3 instances
F.	2 instances

Fasteners (Installed view)

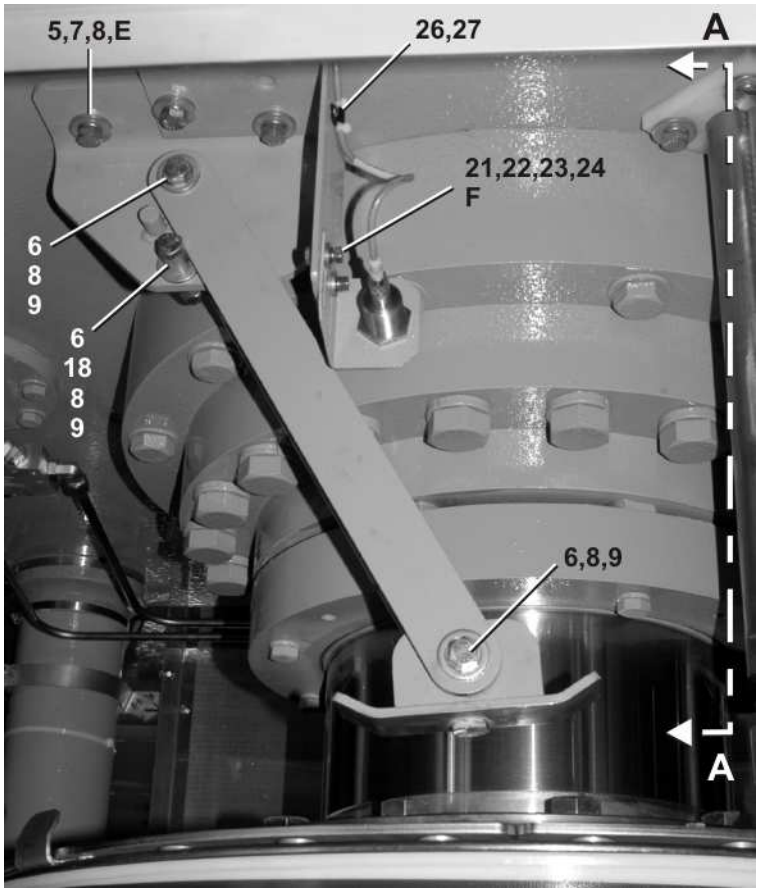

Figure 2: Thrust Arm Assembly—Detailed views

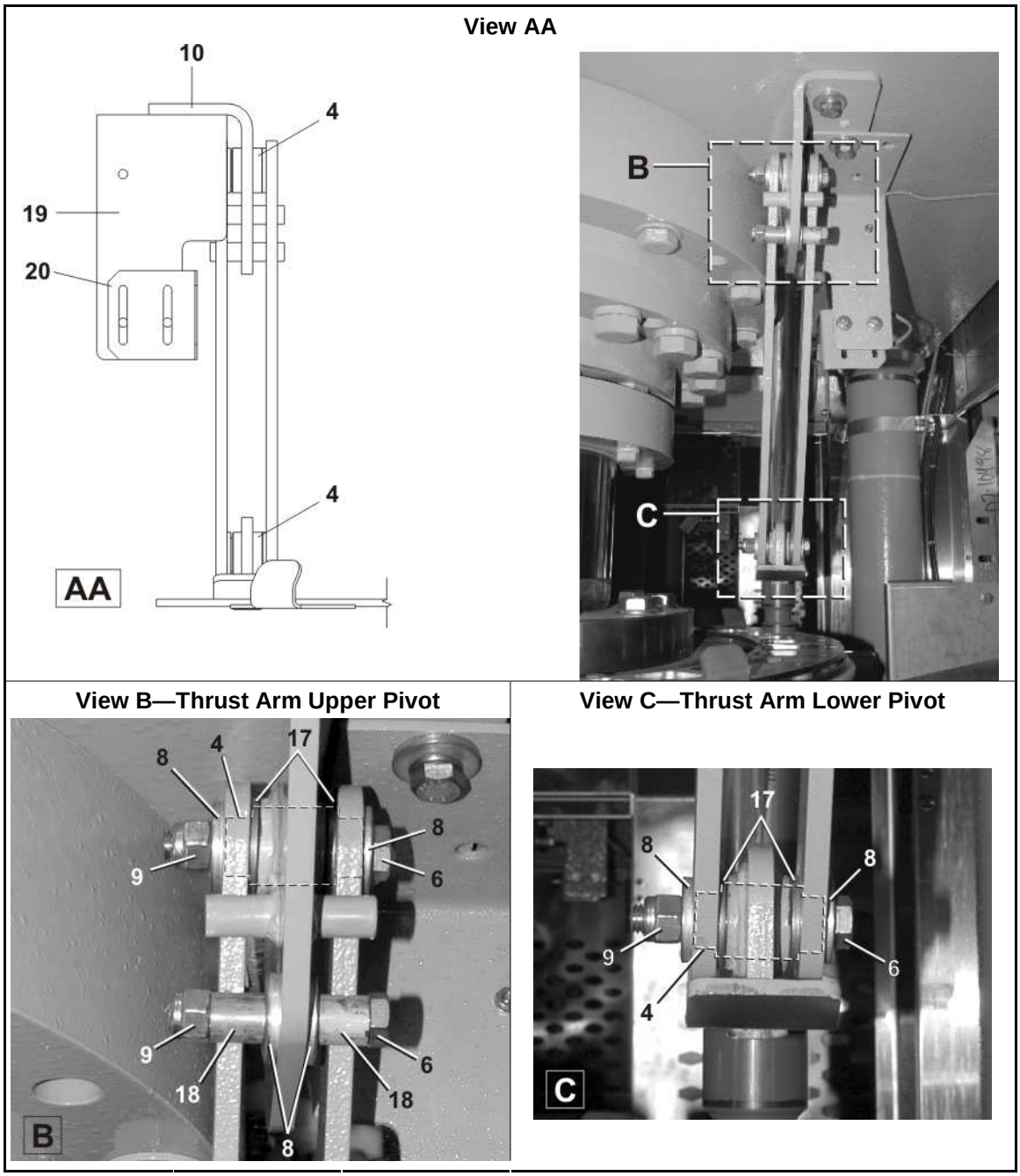

Figure 3: Ratchet Plate

Installed view

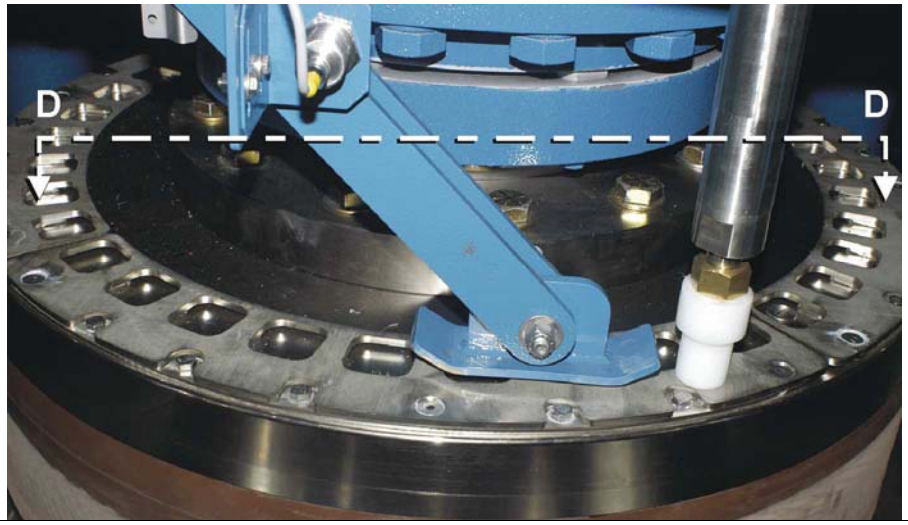

View DD

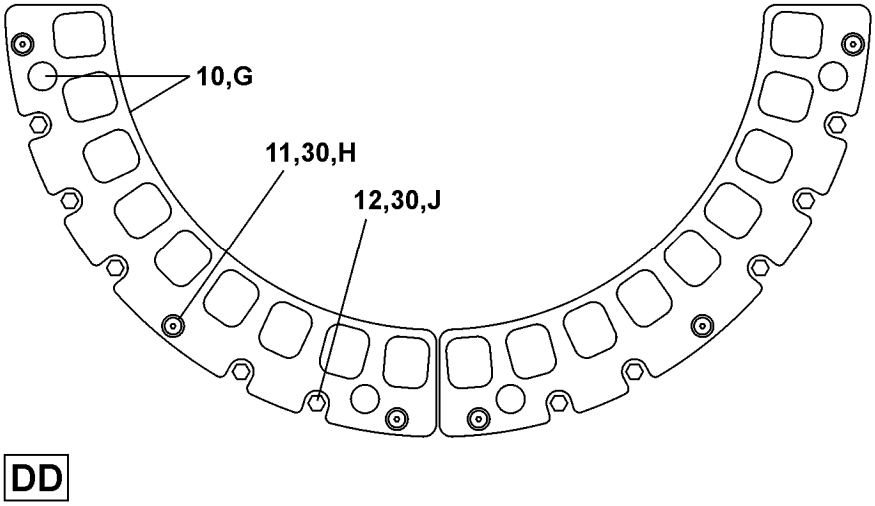

Legend

G. 4 instances. The platen has two holes for the eyebolt for the safety bars. Holes in the ratchet plates must align with these holes.

H. 12 instances

J. 16 instances

Figure 4: Switch Operation Rod

Installed view

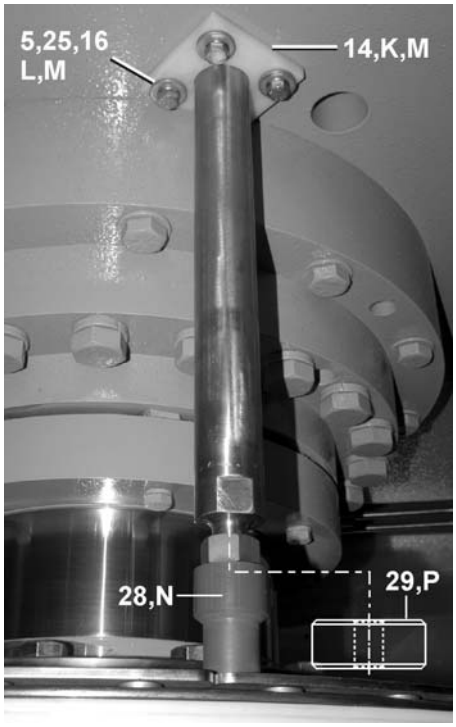

Legend

K. 2 instances

L. 4 instances

M. The same UHMW part is also on the top of the press top plate. Attach with the same bolts and washers.

N. The UHMW base for the rod (MP1540, MP1556, MP1656 and MP1A56 models)

P. The UHMW base for the rod (MP1640 models)

Table 1: Parts List—

Find the assembly for your machine and the letter shown in the "Item" column. The components for your machine will show this letter or the word "all" in the "Used In" column. The numbers shown in the "Item" column are those shown in the illustrations.

Used In	Item	Part Number	Description/Nomenclature	Comments
			Assemblies	
	A	ACW10052	DIAPHRGM ROTATE DEVICE-MP1550	MP1540, MP1556
	B	ACW10051	DIAPHRGM ROTATE DEVICE-MP1603	MP1640
	C	ACW10050	DIAPHRGM ROTATE DEVICE-MP1604	MP1656
	D	ACW10053	DIAPHRGM ROTATE DEVICE-MP1A03	MP1A56
			Components	
A	1	W7 10572A	THRUSTARM PIVOT WLMT-MP1550	
B,C,D	1	W7 10572	THRUSTARM PIVOT BRKT WLMT	
A,B	2	07 10573A	DIAPHRAGM THRUST ARM 16IN	
C	2	07 10573	DIAPHRAM THRUST ARM 18IN	
D	2	07 10603	DIAPHRAGM THRUST ARM-MP1A03	
all	3	W7 10574	DIAPHRAGM DRIVE PIN WLMT	
all	4	X7 10578	THRUSTARM PIVOT SHAFT	
all	5	15K153	HXCAPSCR 1/2 -13 X 1 +1/4 SS	
all	6	15K196	HEXCAPSCR 1/2-13UNC2X3 18-8SS	
all	7	15U310	LOKWASHER REGULAR 1/2 SS18-8	
all	8	15U310S	FLATWASH-SS .53 X 1.37 .187T	
all	9	15G234NS	HXLOCKNUT NYL 1/2-13UNC2 SS18-	
A	10	07 10571A	DIAPHRAGM ROTATING PL-MP1550	
B,C	10	07 10571	DIAPHRAGM ROTATING PLATE	
D	10	07 10602	DIAPHRAGM ROTATING PLATE-MP1A03	
A,B,C	11	15N230	FLTHDSOKSCR 3/8-16UNC 4"LG SS	
D	11	15N231	FLTHDSOKSCR 3/8-16UNC 5"LG SS	
all	12	15K136S	HEXCAPSCR 3/8-16x3.5 SS18-8	
all	14	07 10581	DIAPHRAGM ROD LOWER GUIDE	
all	16	27B34010SS	SPACERROLL .51ID.625L.062T SS	
all	17	5.4E+49	THRUSTBRG 1X1.5X1/8 BG#TB1624	
all	18	07 10582	SPACER 3/4"OD X.095 WALL X.75L	
all	19	07 10586	RAM UP PROX.SW BRKT	
all	20	07 10337	RECEIVING CHUTE SW MTG BRKT	
all	21	15N186	HXCAPSCR 1/4-20X3/4 SS18-8	
all	22	15G170	HEXNUT 1/4-20UNC2 SS18-8	
all	23	15U188	FLTWASH 1/4 STD COMM SS18-8	
all	24	15U181	LOCKWASHER MEDIUM 1/4 SS18-8	
all	25	15U285	FLATWASHER 1/2 STD COMM SS18-8	
all	26	15P010	TRDCUT PHILPANHDSCR 10-24X1/2S	
all	27	12P014GG	CAB.CLP.NON-METAL 3/8ID,3/8W	
A,C,D	28	X7 10250	GUIDE ROD UHMW BASE	
B	29	X7 10250A	DIAPHRAGM ROD BASE-MP1603	
all	30	20C510	LOCTITE MOLYPASTE#51048 ANTI-SEIZE	

2. The Stop Adjustment for the Ratchet Mechanism

WARNING 1: Risk of death or severe injury—The container and ram move independently. During operation, these components move without warning. These components can also move down with power off. Spaces can close and cut off your arm.

- Keep personnel not necessary for this maintenance clear of the machine.
- Use special caution when you use the key that bypasses the door guards for maintenance.

The pin on the bottom of the ratchet arm must fall in the center of a hole in the ratchet turn plate each time the platen goes up. You adjust this with the stop bolt (Figure 5, Item 1) which you can move right or left in its slot, then tighten. You will use the Manual mode in this procedure. Each time that you move the ram up and down, you must move it up fully to simulate the automatic operation of the press. This is necessary to get the correct adjustment of the ratchet arm.

1. Put the stop bolt at the center of the slot and tighten it. This will let the arm have moderate movement.
2. Use the Manual mode. Move the ram up fully. Move the ram down until the turn plate is approximately two inches (50 mm) below the bottom of the ratchet arm. The first time that you do this, it is possible that the pin on the ratchet arm will not be aligned with a hole. This step will align the holes in the turn plate with the pin.
3. Look at the position of the pin on the ratchet arm and the hole it will go in. If the pin will not go in the center of the hole, refer to Figure 5. Adjust the stop bolt as follows:
   - Move the bolt to the right for less movement of the arm. The pin will go in the hole near the front edge (the edge that the pin pushes).
   - Move the bolt to the left for more movement of the arm. The pin will go in the hole near the rear edge (the edge the pin moves away from).
4. Do steps 2 and 3 again until you get the correct adjustment.
5. Move the ram up and down continuously until the diaphragm makes one full turn to make sure that the adjustment is correct.

Figure 5: Where to Adjust the Thrust Arm

View of the Thrust Arm

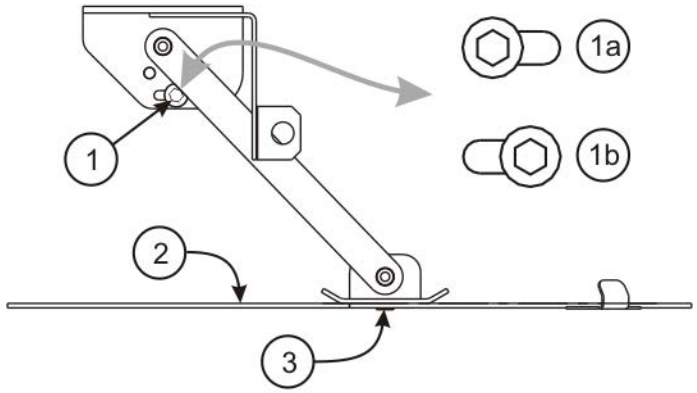

Legend

1. Stop bolt
1a. Stop bolt adjusted for **maximum** movement of the thrust arm.
1b. Stop bolt adjusted for **minimum** movement of the thrust arm.
2. Ratchet plate
3. Pin in a hole in the ratchet plate

— End of BIPPMM22 —

Load Chute Scupper with Adjustable Seal

MP1540, MP1556, MP1640, MP1656, MP1A50
MPL556, MPL640, MPL656

Pellerin Milnor Corporation
P. O. Box 400, Kenner, LA 70063-0400

Litho in U.S.A.

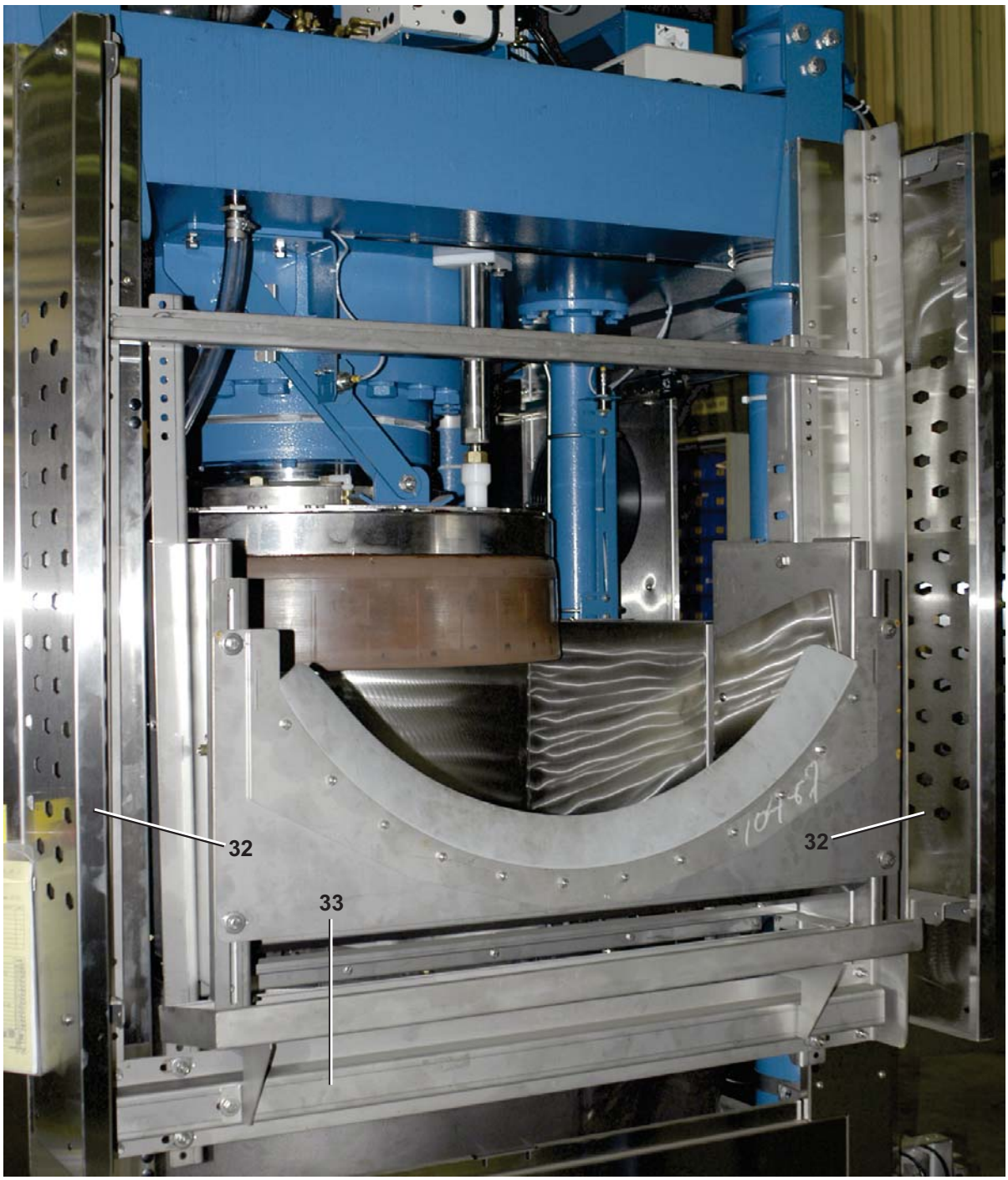

Load Chute Scupper with Adjustable Seal

MP1540, MP1556, MP1640, MP1656, MP1A50
MPL556, MPL640, MPL656

BMP160024/2020275A
(2 / 5)

Pellerin Milnor Corporation
P. O. Box 400, Kenner, LA 70063-0400

Litho in U.S.A.

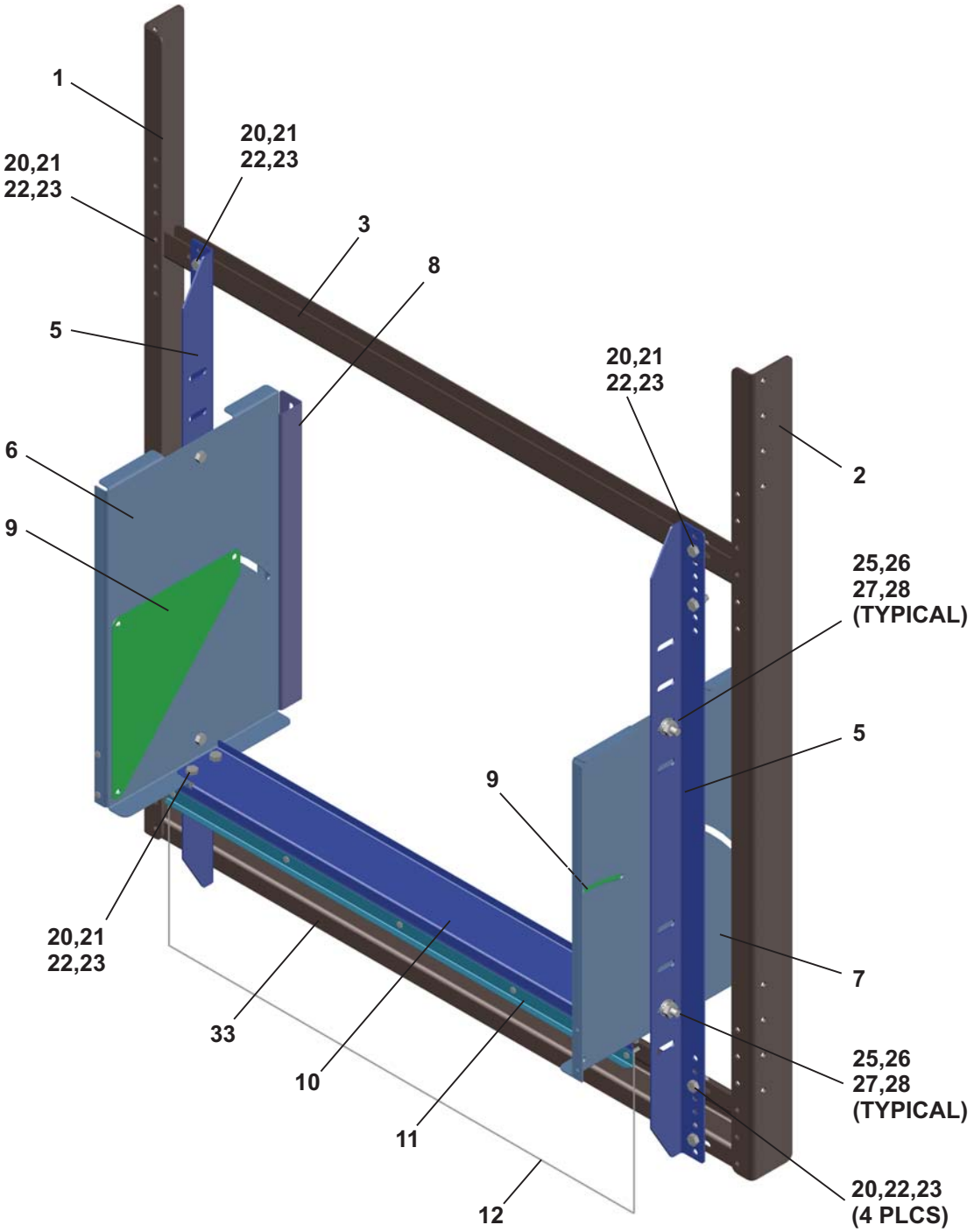

Load Chute Scupper Frame

Load Chute Scupper with Adjustable Seal

MP1540, MP1556, MP1640, MP1656, MP1A50
MPL556, MPL640, MPL656

BMP160024/2020275A
(3 / 5)

Pellerin Milnor Corporation
P. O. Box 400, Kenner, LA 70063-0400

Litho in U.S.A.

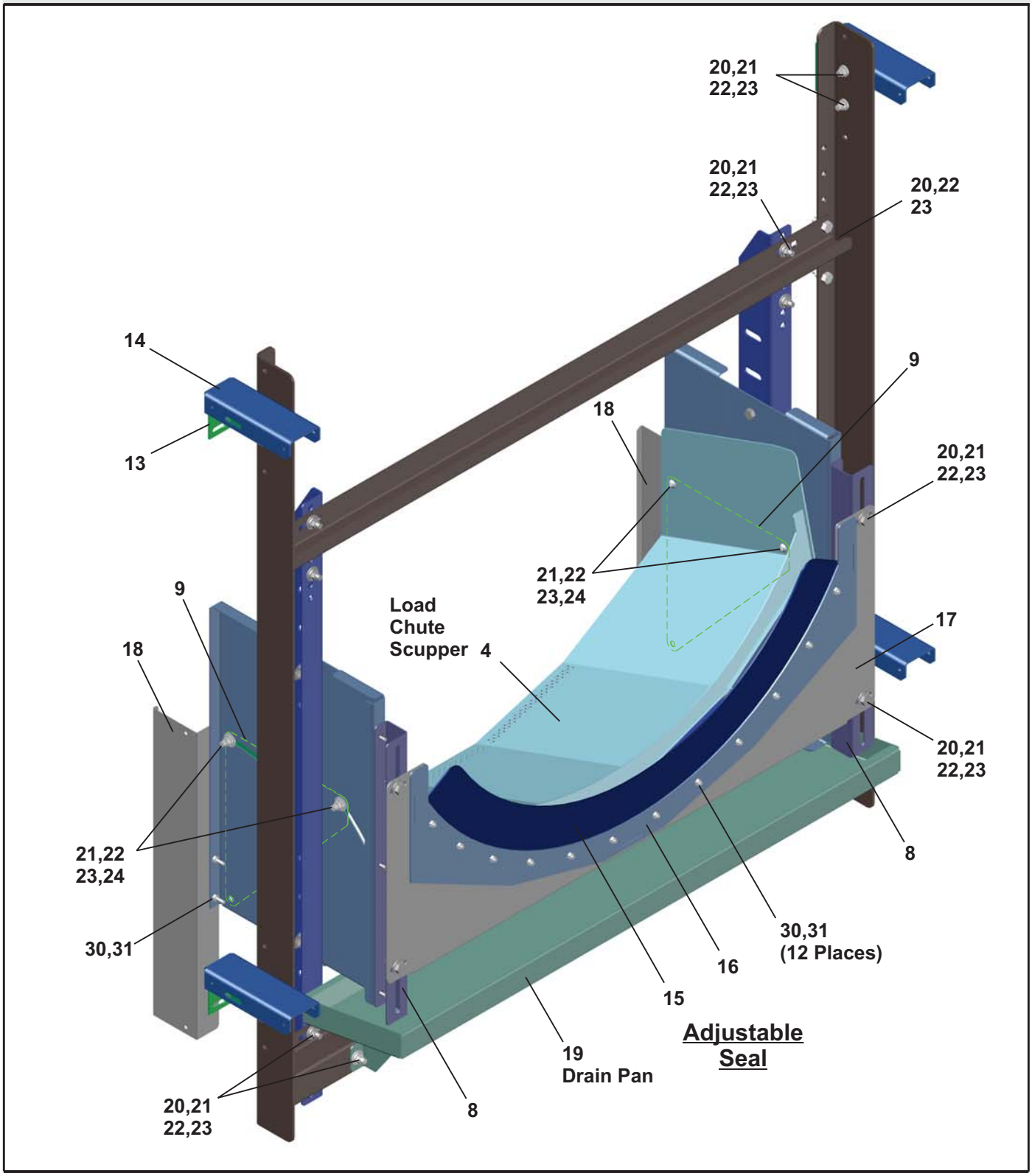

Load Chute Scupper with Adjustable Seal

MP1540, MP1556, MP1640, MP1656, MP1A50
MPL556, MPL640, MPL656

Parts List—Scupper Load Chute

Find the correct assembly first, then find the needed components. The item letters (A, B, C, etc.) assigned to assemblies are referred to in the "Used In" column to identify which components belong to an assembly. The item numbers (1, 2, 3, etc.) assigned to components relate the parts list to the illustration.

Used In	Item	Part Number	Description	Comments
----------ASSEMBLIES----------				
	A	ACS10009A	ENTRY CHUTE W/ADJUSTABLE SEAL-MP16XX	
----------COMPONENTS----------				
all	1	07 10328	CHUTE DRAIN FRAME-RIGHT	
all	2	07 10328A	CHUTE DRAIN FRAME-LEFT	
all	3	07 10478	ENTRY CHUTE 40W TOP CHAN	
all	4	W7 10703	OUTSIDE LOADCHUTE WLMT-40W	
all	5	07 10498	ENTRY CHUTE MTG ANGLE-MP16XX	
all	6	07 10458	ENTRY CHUTE MTG BRKT-RT	
all	7	07 10458A	ENTRY CHUTE MTG BRKT-LF	
all	8	07 10708	LOADCHUTE SEAL MTG BRKT	
all	9	07 10460	CHUTE ANGLE ADJ PLATE	
all	10	07 10489	PLASTIC SHEET MTG ANGLE-40W	
all	11	07 10332	PLASTIC SHEET MTG STRIP	
all	12	54C241CP	PLASTIC SHT .080X24" EA.=1FT	
all	13	07 10015	LDCHUTE MOUNTING BRKT-SSPRESS	
all	14	07 10017	LOADCHUTE GUARD MTG BRKT	
all	15	07 10486	LOADCHUTE SPLASH GUARD	
all	16	07 10487	ENTRY CHUTE 40W END PLATE	
all	17	07 10707	LOADCHUTE SEAL MTG PANEL	
all	18	07 10684	LOAD CHUTE SIDE PANNEL	
all	19	W7 10706	LDCHUTE DRAIN PAN WLMT	
all	20	15K086	HXCAPSCR 3/8-16NCX3/4 SS18-8	
all	21	15U245A	FLTWASH 25/64IDX1.25ODX3/32 S/	
all	22	15U260	LOCKWASHER MEDIUM 3/8 SS18-8	
all	23	15G206	HEXNUT 3/8-16 UNC2 SS 18-8	
all	24	15K083V	BUTSOKCAPSCR 3/8-16X3/4 SS18-8	
all	25	15K153	HXCAPSCR 1/2 -13 X 1 +1/4 SS	
all	26	15U310S	FLATWASH-SS .53 X 1.37 .187T	
all	27	15U310	LOKWASHER REGULAR 1/2 SS18-8	
all	28	15G234B	HEXNUT 1/2-13UNC2B BRASS	

Parts List—Scupper Load Chute

Find the correct assembly first, then find the needed components. The item letters (A, B, C, etc.) assigned to assemblies are referred to in the "Used In" column to identify which components belong to an assembly. The item numbers (1, 2, 3, etc.) assigned to components relate the parts list to the illustration.

Used In	Item	Part Number	Description	Comments
all	29	15U285	FLATWASHER 1/2 STD COMM SS18-8	
all	30	15K041S	HEXCAPSCR 1/4-20UNC2AX1 SS18-8	
all	31	15G164NE	HEXLOKNUT NYL 1/4-20 UNC2A SS	
all	32	07 10018	LOADCHUTE GUARD 7632	
all	33	07 10469	ENTRY CHUTE 40W SUPPORT CHAN	

Receiving Chute and Can

MP1540, MP1566, MP1640, MP1656, MP1A50
MPL566, MPL640, MPL656

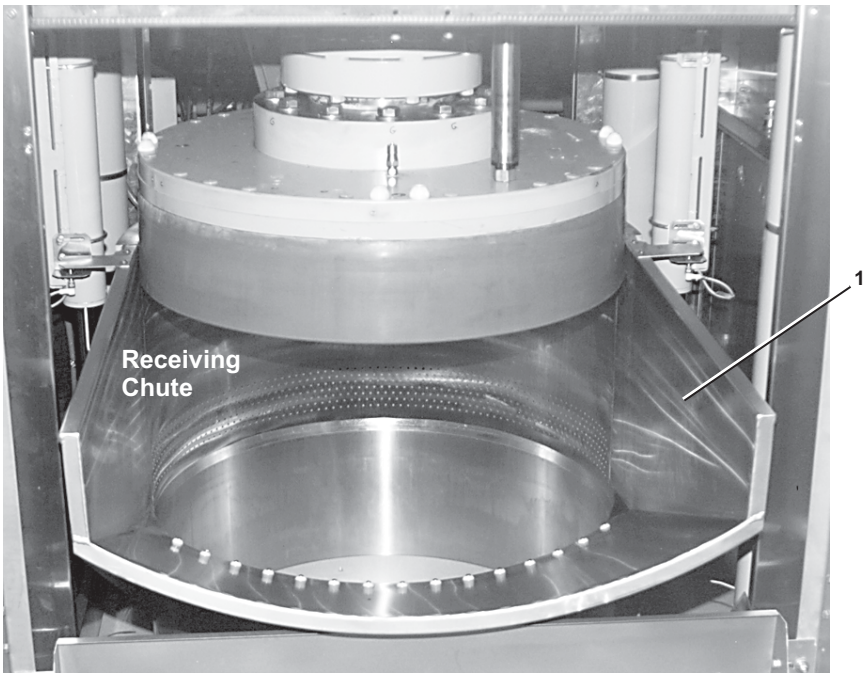

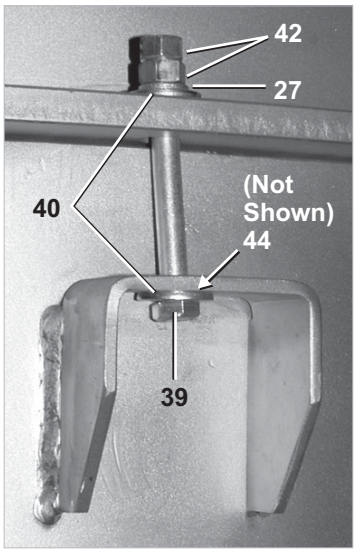

Typical 6 Places

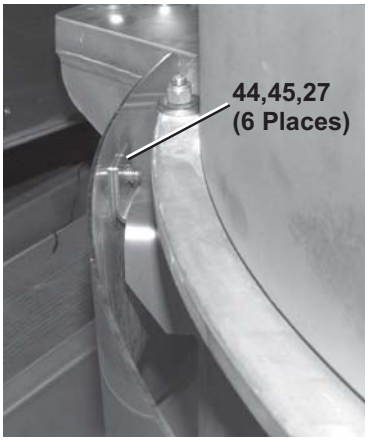

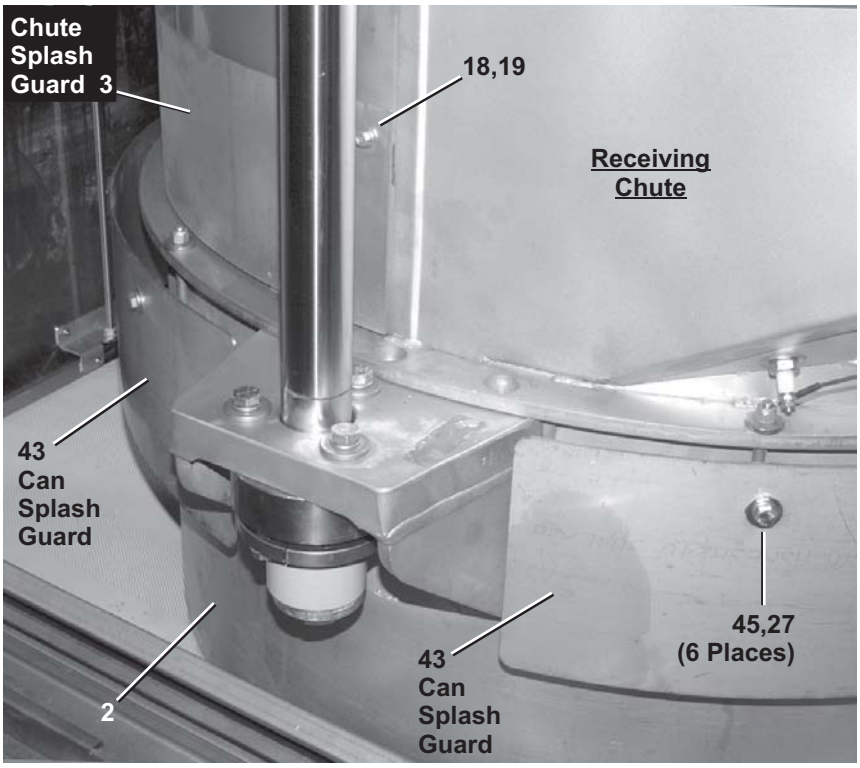

Receiving Chute and Can

MP1540, MP1566, MP1640, MP1656, MP1A50
MPL566, MPL640, MPL656

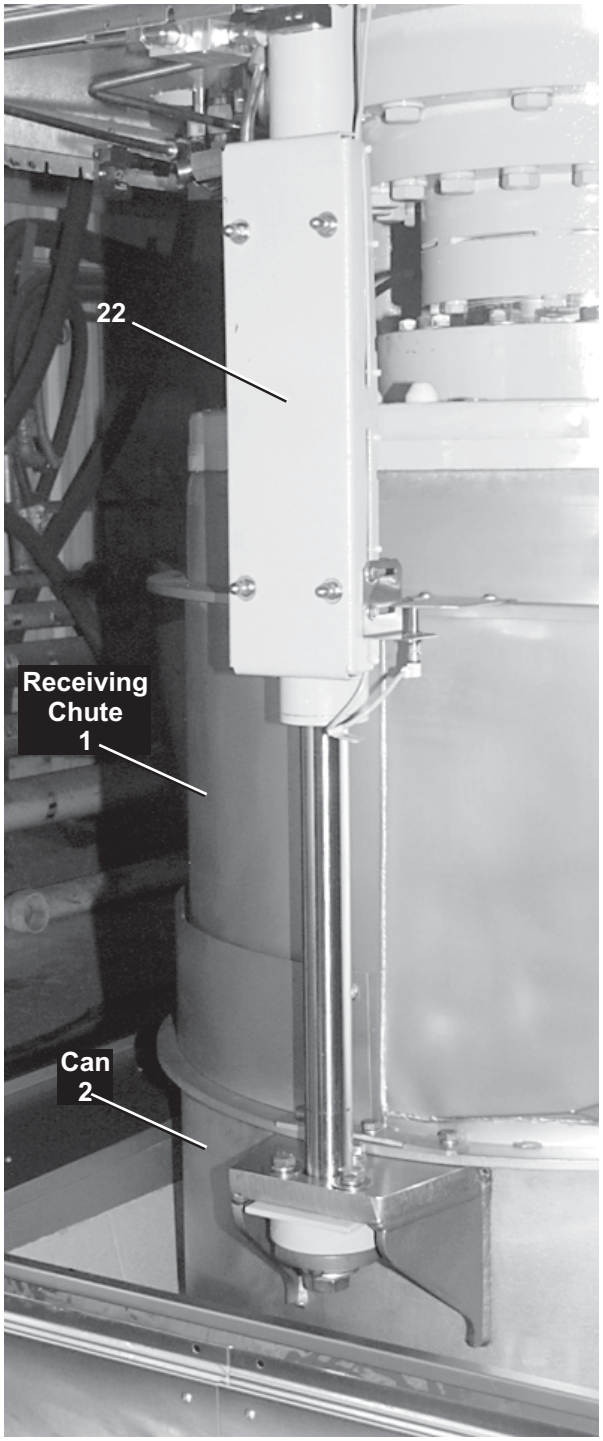

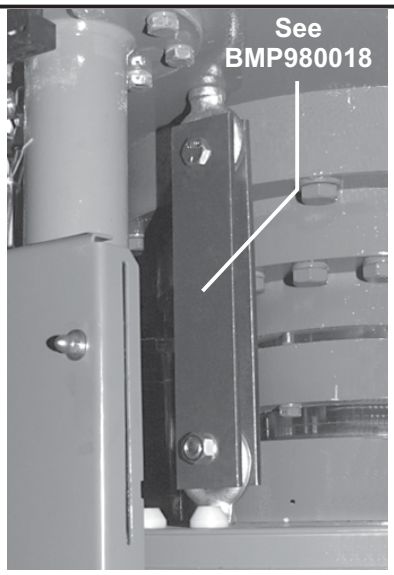

Diaphragm Safety Bar
(Install before servicing. See MSOP0967AE.)

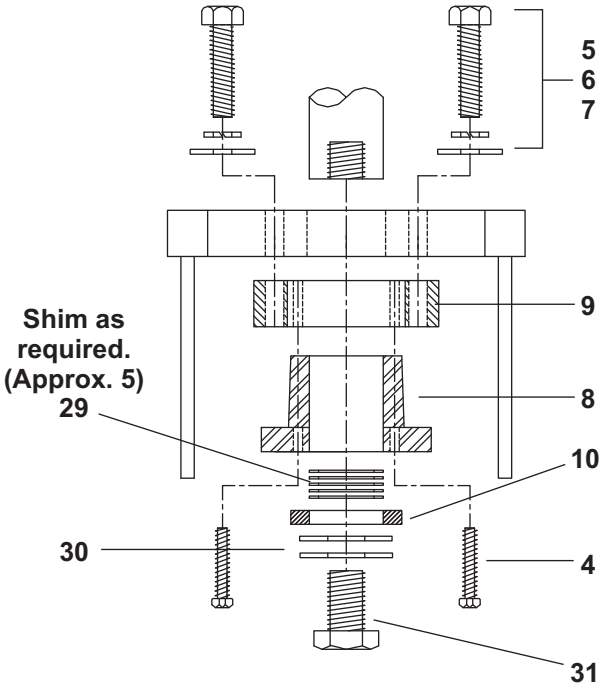

Cylinder Rod Bushing Assembly

Receiving Chute and Can

MP1540, MP1566, MP1640, MP1656, MP1A50
MPL566, MPL640, MPL656

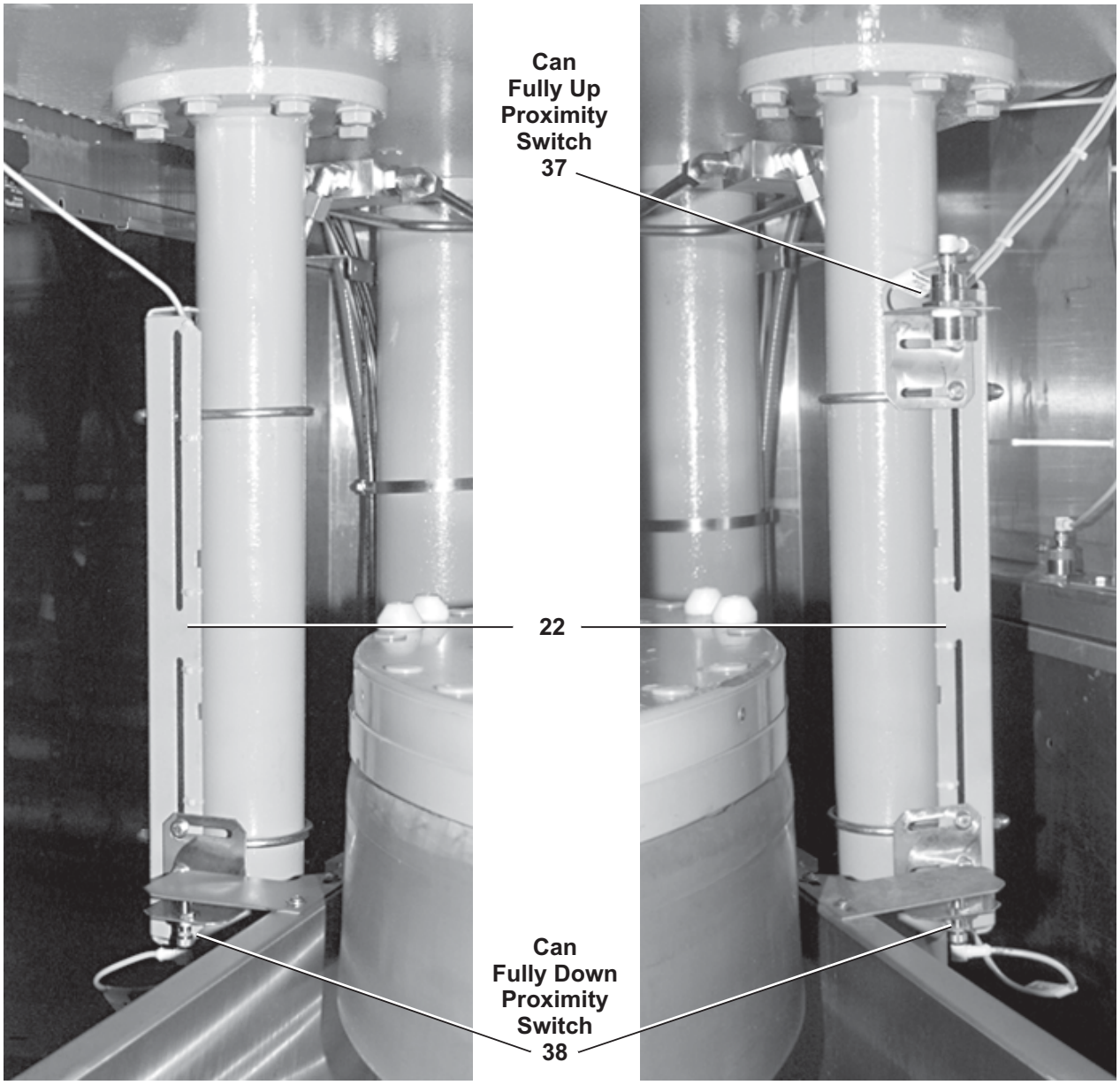

Receiving Chute and Can

MP1540, MP1566, MP1640, MP1656, MP1A50
MPL566, MPL640, MPL656

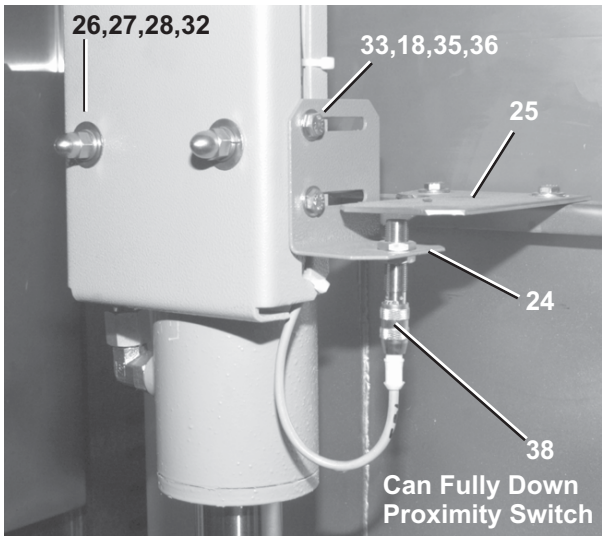

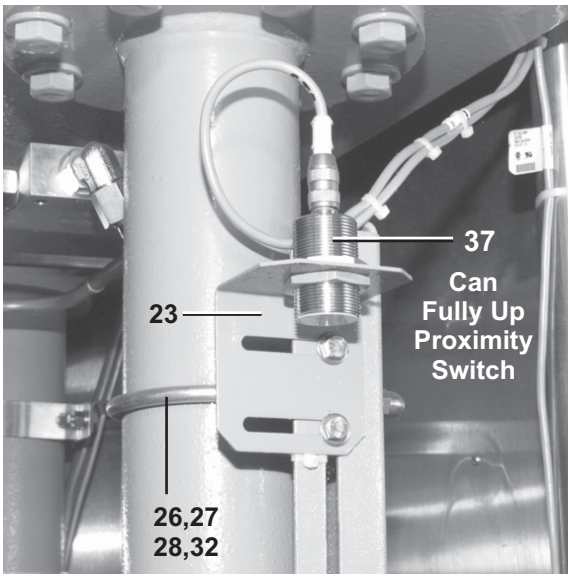

Incomplete Transfer Chute Sensors:

Receiving Chute and Can

MP1540, MP1566, MP1640, MP1656, MP1A50
MPL566, MPL640, MPL656

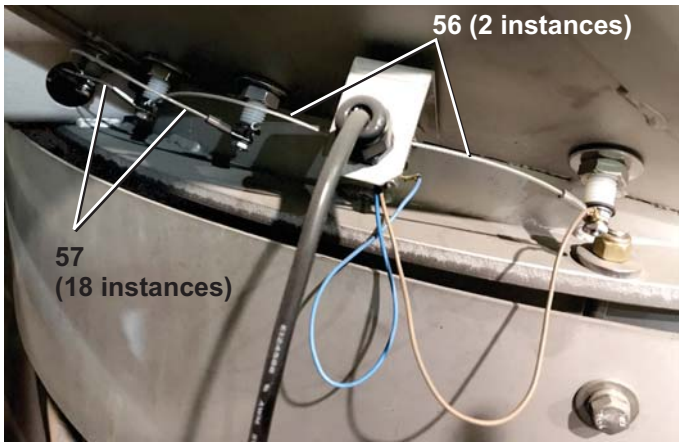

View A-A

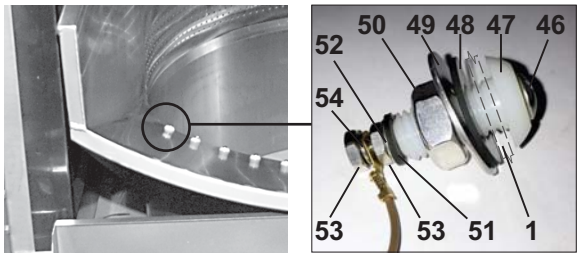

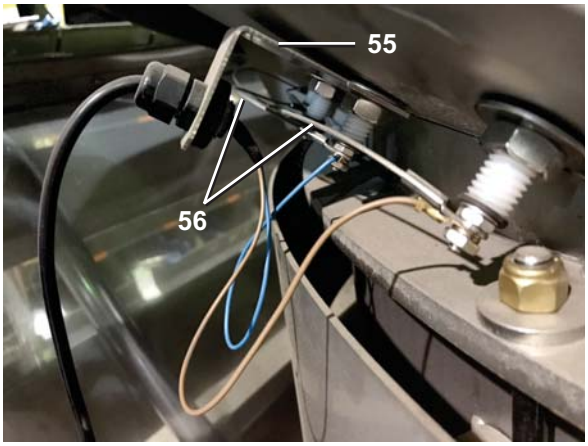

View B-B

Note: Incomplete Transfer Chute Sensors
Make a closed circuit. Connect every other sensor with nine inch and six inch wires (items 56 and 57) to the furthest point out, as shown. Connect skipped sensors to return to the harness. Make electrical control connections.

Parts List

Find the correct assembly first, then find the needed components. The item letters (A, B, C, etc.) assigned to assemblies are referred to in the "Used In" column to identify which components belong to an assembly. The item numbers (1, 2, 3, etc.) assigned to components relate the parts list to the illustration.

Used In	Item	Part Number	Description	Comments
			ASSEMBLIES	
	A	MP1540B	40 BAR PRESS BASE MODULE	MP1540
	B	MP1556B	MP1556B 56 BAR PRESS BASE MODULE	MP1556, MPL556
	C	MP1640B	MP1640B 40 BAR PRESS BASE MODULE	MP1640, MPL640
	D	MP1656B	MP1656B 56 BAR PRESS BASE MODULE	MP1656, MPL656
	E	MP1A56B	MP1A56 56BAR BASE MODULE	MP1A50
	F	A80CS002	CHUTE SENSOR ASSY-MP1A03	ALL
	G	ECA9B083S	ASSEMBLY FOR SENSOR PRESS	ALL
			COMPONENTS	
AB	1	W7 10518	SSPRESS CHUTE 36"X30DEG WLMT	
CD	1	W7 10468	SSPRESS CHUTE 40WX30DEG WLMT	
E	1	W7 10510	SSPRESS CHUTE 48"X35DEG WLMT	
AB	2	Y7 10064	PRESS 900MMX18.5H CAN-MACHINED	
CD	2	Y7 10026	SSPRESS 18.5H CAN-MACHINED	
E	2	Y7 10032	SSPRESS 48DX22.5H CAN-MACHINED	
AB	3	07 10519	SPLASH GUARD 36DIA CHUTE-ROLLED	
CD	3	07 10306	CHUTE SPLASH GUARD-ROLLED	
E	3	07 10373	SPLASH GUARD 48"CHUTE-ROLLED	

Receiving Chute and Can

MP1540, MP1566, MP1640, MP1656, MP1A50
MPL566, MPL640, MPL656

Parts List

Find the correct assembly first, then find the needed components. The item letters (A, B, C, etc.) assigned to assemblies are referred to in the "Used In" column to identify which components belong to an assembly. The item numbers (1, 2, 3, etc.) assigned to components relate the parts list to the illustration.

Used In	Item	Part Number	Description	Comments
all	4	15K116	HEXFLGSCR 3/8-16X1.75 GR8 ZINC	
all	5	15K191C	HEXCAPSCR 1/2-13X2.5 GR8CHROME	
all	6	15U310	LOKWASHER REGULAR 1/2 SS18-8	
all	7	15U310S	FLATWASH-SS .53 X 1.37 .187T	
all	8	56Q2ASFNIP	2"BUSHING QD TYPE"SF" + PLTG.	
all	9	X7 10111	QD HUB 1.50LG BUSHING	
ABC	10	X7 10051	CAN CYL ROD END SPACER-31BAR	
DE	10	X7 10046	CAN CYL ROD END SPACER-50BAR	
all	18	15U188	FLTWASH 1/4 STD COMM SS18-8	
all	19	15G180	HEXNUT 1/4-20 BRASS	
ABCD	22	07 10360	RECEIVE CHUTE SW CHANNEL	
E	22	07 10384	LOADCHUTE PROX.SW BRKT	
all	23	07 10337	RECEIVING CHUTE SW MTG BRKT	
all	24	07 10337A	CHUTE PROX.SW BRKT-12MM	
all	25	07 10338A	CHUTE TARGET-900MM MEMBRANE	
all	25	07 10338	SSPRESS CHUTE TARGET	
all	26	15U245	FLTWASH 3/8 STD COMM 18-8 SS	
all	27	15U260	LOCKWASHER MEDIUM 3/8 SS18-8	
all	28	27A035	UBOLT 3/8-16 3.625"BETWEN LEGS	
all	29	15U404C	16 GA ADJWASH =BRGHOUS ZINC	
all	30	02 15630	FLATWASH 2.75 X .25+ZINC PLT	
all	31	15K255A	HEXCAPSCR 1-8X1.75 316SS	
all	32	15G221	HEXCASTLENUT 3/8-16UNC2 SS18-8	
all	33	15N174	HXCAPSCR 1/4-20UNC2X5/8SS18-8	
all	35	15U181	LOCKWASHER MEDIUM 1/4 SS18-8	
all	36	15G170	HEXNUT 1/4-20UNC2 SS18-8	
all	37	09RPS30ADS	PROX SW QK CONN 30M NO-DC SHLD	
AB	38	09RPSDC010	CONN.STR FEMALE DC 3A 300V 10M	
CDE	38	09RPSDC095	CON.90DEG FEMALE DC 3A300V 5M	
all	39	15K227T	HXCAPSCW 3/8-16X3 1/2 TFL S/S	
all	40	15U245A	FLTWASH 25/64IDX1.25ODX3/32 S/	
all	42	15G206	HEXNUT 3/8-16 UNC2 SS 18-8	
AB	43	07 10075	CAN SPLASH GUARD MP1550	
CD	43	07 10072	CAN SPLASH GUARD MP16XX	
E	43	07 10074	CAN SPLASH GUARD MP1A03	

Receiving Chute and Can

MP1540, MP1566, MP1640, MP1656, MP1A50
MPL566, MPL640, MPL656

Parts List

Find the correct assembly first, then find the needed components. The item letters (A, B, C, etc.) assigned to assemblies are referred to in the "Used In" column to identify which components belong to an assembly. The item numbers (1, 2, 3, etc.) assigned to components relate the parts list to the illustration.

Used In	Item	Part Number	Description	Comments
all	44	07 10073	CAN SPLASH GUARD BRKT	
all	45	15K086	HXCAPSCR 3/8-16NCX3/4 SS18-8	
all	45	15K086	HXCAPSCR 3/8-16NCX3/4 SS18-8	
all	46	15N153A	TRUSLTMACCHSCR10-24X1.75 18-8S	
F	47	X7 10322	CHUTE SENSOR NYLON BOLT	
G	48	15U173	FLATWASHER 1/2 VITON - PK = 5 EACH	
F	49	15U285	FLATWASHER 1/2 STD COMM SS18-8	
F	50	15G231S	HXFINJAMNUT 1/2-13UNC2B SS18-8	
G	51	15U132	FLATWASH #10 VITON - PK = 25 EACH	
F	52	15U135	FLATWASH#10 .4370DX.203IDX.04T	
F	53	15G130	HEXMACHSCRNUT 10-24UNC2 SS18-8	
F	54	15U160	LOCKWASHER MEDIUM #10 SS18-8	
F	55	07 10339	SENSOR WIRE CONN BRKT	
G	56	09V300SS09	9" SS WIRE - RING TO RING - COATED	
G	57	09V300SS06	6" SS WIRE - RING TO RING - COATED	

Counterbalance Valves and Tubing

MP1540, MP1556, MP1640, MP1656, MP1A50
MPL556, MPL640, MPL656

Pellerin Milnor Corporation
P. O. Box 400, Kenner, LA 70063-0400

Litho in U.S.A.

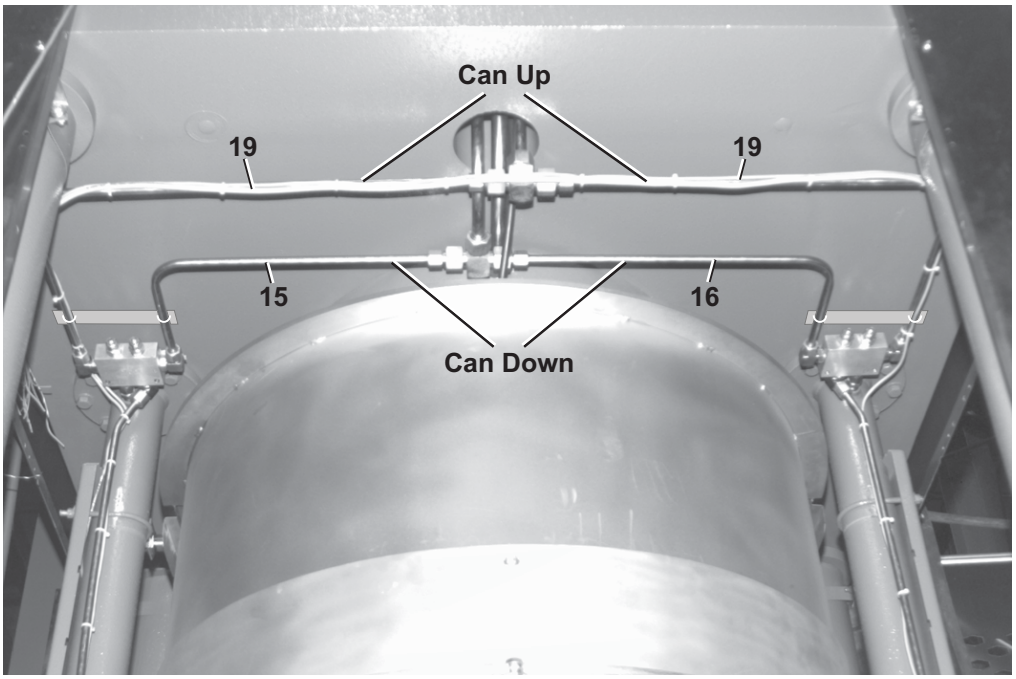

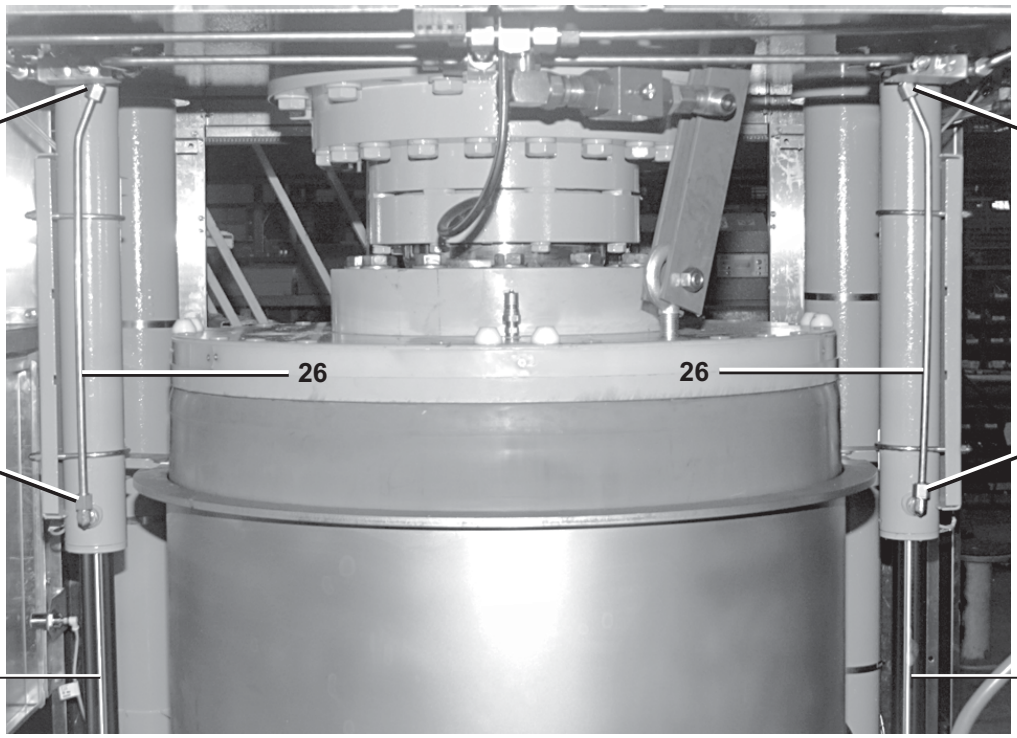

Pellerin Milnor Corporation
P. O. Box 400, Kenner, LA 70063-0400

Litho in U.S.A.

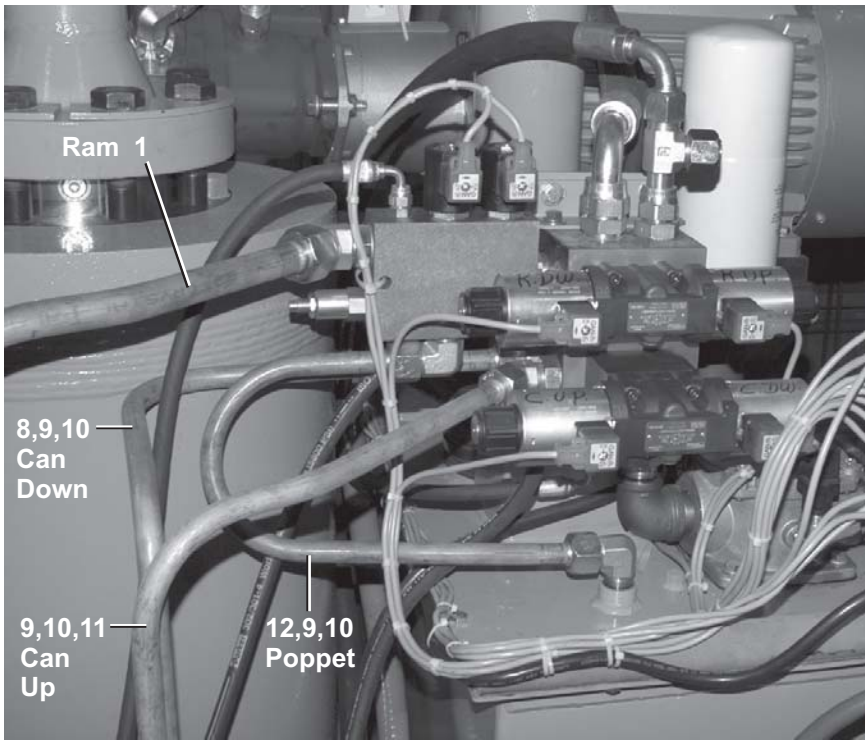

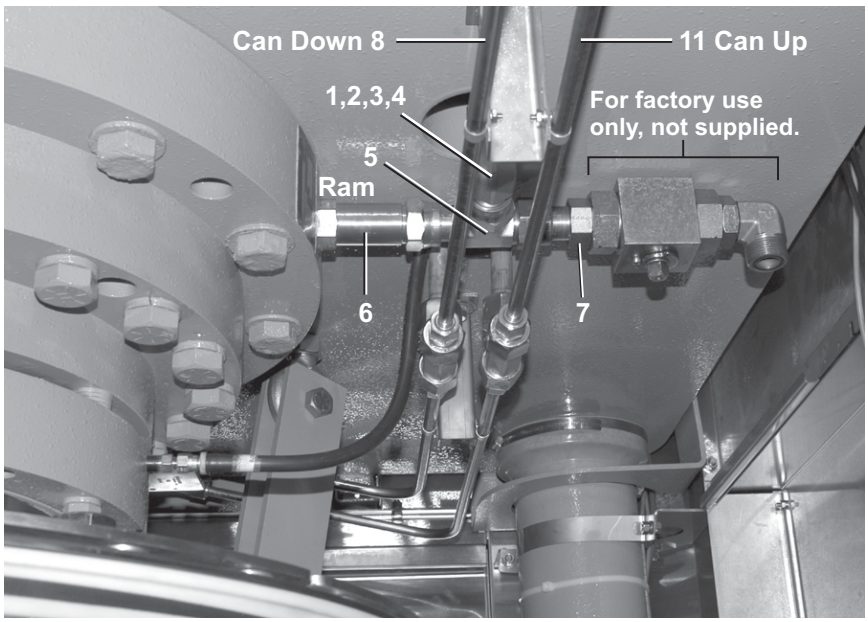

Pellerin Milnor Corporation
P. O. Box 400, Kenner, LA 70063-0400

Litho in U.S.A.

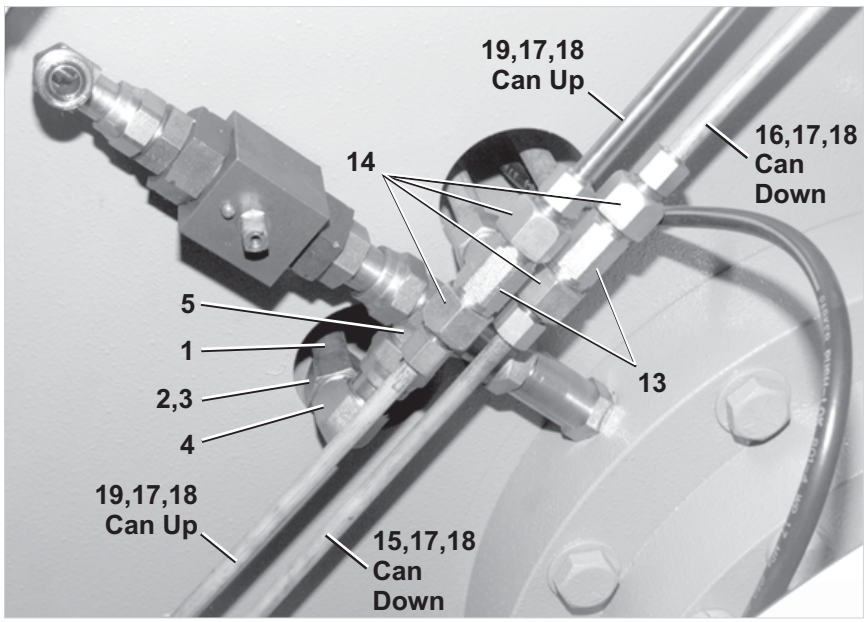

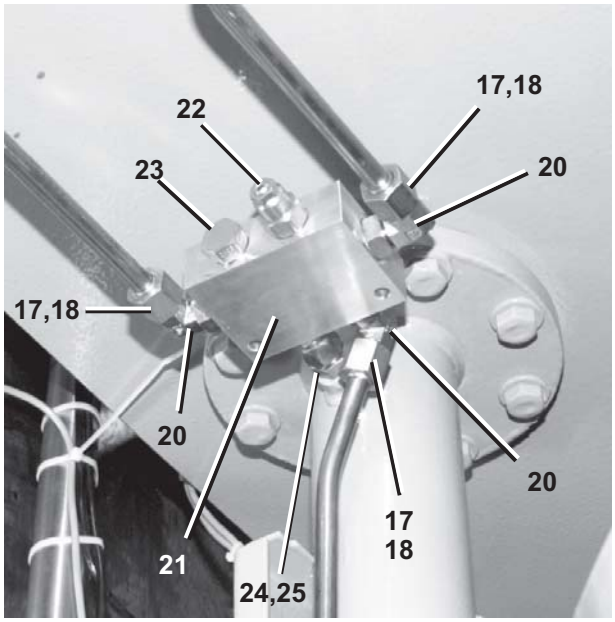

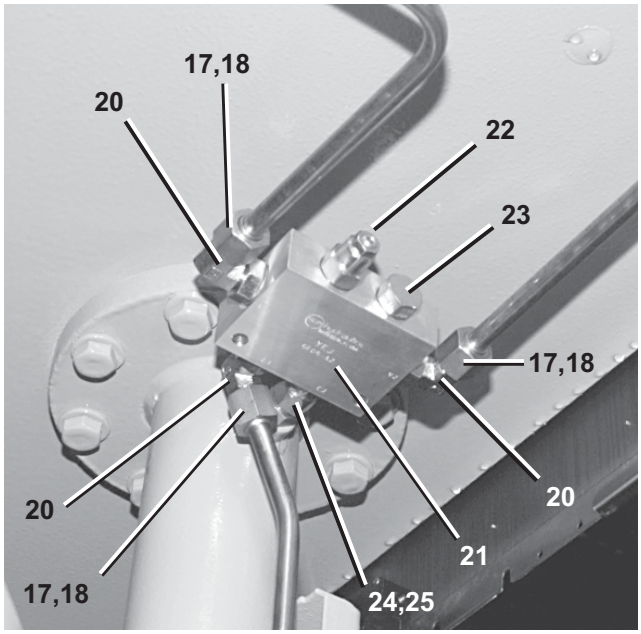

Pellerin Milnor Corporation
P. O. Box 400, Kenner, LA 70063-0400

Litho in U.S.A.

Parts List—Counterbalance Valves and Tubing

Find the correct assembly first, then find the needed components. The item letters (A, B, C, etc.) assigned to assemblies are referred to in the "Used In" column to identify which components belong to an assembly. The item numbers (1, 2, 3, etc.) assigned to components relate the parts list to the illustration.

Used In	Item	Part Number	Description	Comments
:----------			----------ASSEMBLIES----------	
	A	A80CC001	CAN CYL-COUNTERBAL ASSY	MP1540, MP1556, MP1640, MP1656
	B	A80CC005	CAN CYL-COUNTERBAL ASSY-MP1A03	MP1A50
	C	AHT10015	TUBINGS FOR MP1540/1550/1603	MP1540, MP1556, MP1640
	D	AHT10016	TUBINGS FOR MP/1556/1640	MP1656, MP1A50
----------			----------COMPONENTS----------	
C	1	07 10646C	TUBING RAM UP-MP1540	MP1540
C	1	07 10646A	TUBING-RAM UP-MP1556/1640	MP1556, MP1640
D	1	07 10646	TUBING RAM UP-MP1656	MP1656
D	1	07 10646B	TUBING-RAM UP-MP1AXX	MP1A50
all	2	52ZN1AS001	TUBEFIT 1"NUT #16-BL-S	
all	3	52ZN1AS002	TUBEFIT 1"SLEEVE #16-TPL-STAINLESS	
all	4	52ZJ1AS002	TUBEFIT90ELSWNT1"#16-C6LO-S	
all	5	52ZT1AS003	TUBEFTTEE 1"PARKER#16R6L0-S	
all	6	52ZC00S008	TUBEFITSTRTHDCON 1"#16-F50L0	
all	7	52ZN1AS003	TUBEFIT NUT+CAP #16-FNL-S	
all	8A	07 10645	TUBING-CAN DOWN	MP1656
all	9	52ZN0PS001	TUBEFIT 3/4"NUT #12BL-S	
all	10	52ZN0PS002	TUBEFIT 3/4"SLEEVE #12-TPL-STAINLESS	
all	11A	07 10644	TUBING-CAN UP	MP1656
all	12	07 10643	TUBING-POPET VAL MANF RETURN	
all	13	52ZT00S002	TUBEFIT 3/4TEE #12-JLO-S	
all	14	52ZL00S008	TUBEFITRED3/4X1/2#12-8TRL0N-S	
all	15	07 10648	TUBING-C'BAL CAN DOWN-SHORT	
all	16	07 10649	TUBING-C'BAL CAN DOWN LONG	
all	17	52ZN00S004	TUBEFIT 1/2"NUT FCSL#8-BL-S	
all	18	52ZN00S005	TUBEFIT 1/2"PARF.SLEEVE#8TPL-S	
all	19	07 10650	TUBING-C'BAL CAN UP	
all	20	52ZJ00S003	TUBEFIT1/2"90ELFC#8-C50LO-S	
all	21	96DH471	COUNTERBALANCE VALVE-SUN BODY	
all	22	96DH471A	CARTRIDGE-COUNTERBAL.SUN	
all	23	96DH410	CART., SUN CHECKVALVE CKCB-XCN	
all	24	52XY0KR032	STRADPT 1/2MJICX0R#6400-8-8-0	
all	25	52XY0KR034	STRADPT 1/2M0RXFJIC#6402-8-8-0	
all	26	07 10647	TUBING-CANCLY CAN UP PORT	
All	27	27E163A17A	HYD.CYL 3.25"BORE X 16.25"STK	MP1540,MP1640 MP1556,MP1656
all	27	27E163A20A	HYD.CYL.3.25"BOREX 20.25"STK.	MP1A50

Pneumatic Piping and Assemblies

3

Pneumatic Schematic

MP1540, MP1556, MP1640, MP1656, MP1A50
MPL550/556, MPL640/650/656

BMP110042/2020275B
(1 / 2)

Pellerin Milnor Corporation
P. O. Box 400, Kenner, LA 70063-0400

Litho in U.S.A.

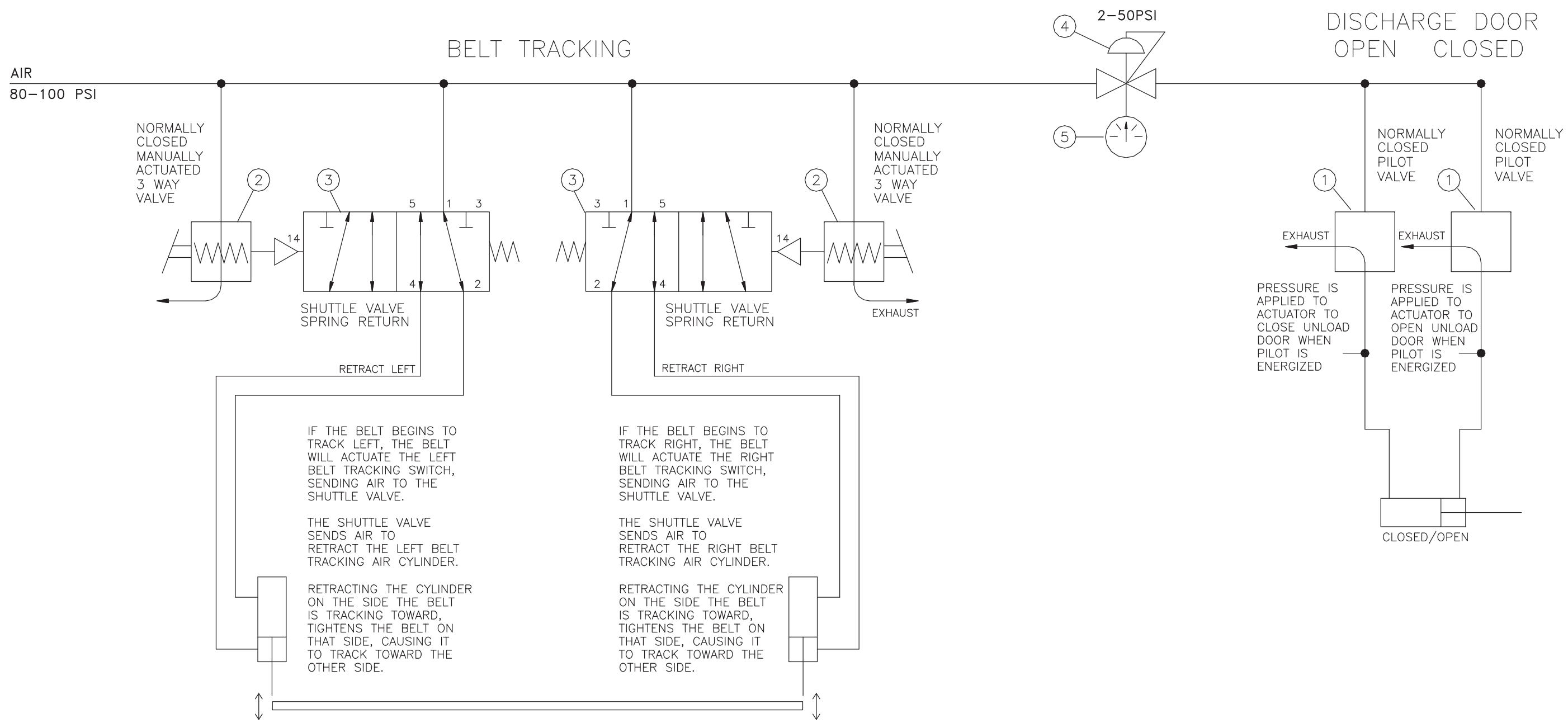

Pneumatic Schematic

MP1540, MP1556, MP1640, MP1656, MP1A50
MPL550/556, MPL640/650/656

BMP110042/2020275B
(2 / 2)

Pellerin Milnor Corporation
P. O. Box 400, Kenner, LA 70063-0400

Litho in U.S.A.

Parts List—Pneumatic Schematic

Find the correct assembly first, then find the needed components. The item letters (A, B, C, etc.) assigned to assemblies are referred to in the "Used In" column to identify which components belong to an assembly. The item numbers (1, 2, 3, etc.) assigned to components relate the parts list to the illustration.

Used In	Item	Part Number	Description	Comments
			----------COMPONENTS----------	
all	1	96R301B37	1/8" AIRPILOT 3W NC 120V50/60	
all	2	96N005	3WAY AIROP CONT.VLV.CLIPP#MJV3	
all	3	96N0011H	SHUTLVLV 1/4" 4WAY MECHSPRING	
all	4	96J019E	1/4"PRESSREG2-50P R07-200-RNEA	
all	5	30N101	PRESSGAUGE 1/8"BACKCN.0-60PSI	

Conveyor Assemblies

4

Conveyor Bed

MP1540, MP1556, MP1640, MP1656, MP1A50, MPL556, MPL640, MPL656

Pellerin Milnor Corporation
P. O. Box 400, Kenner, LA 70063-0400

Litho in U.S.A.

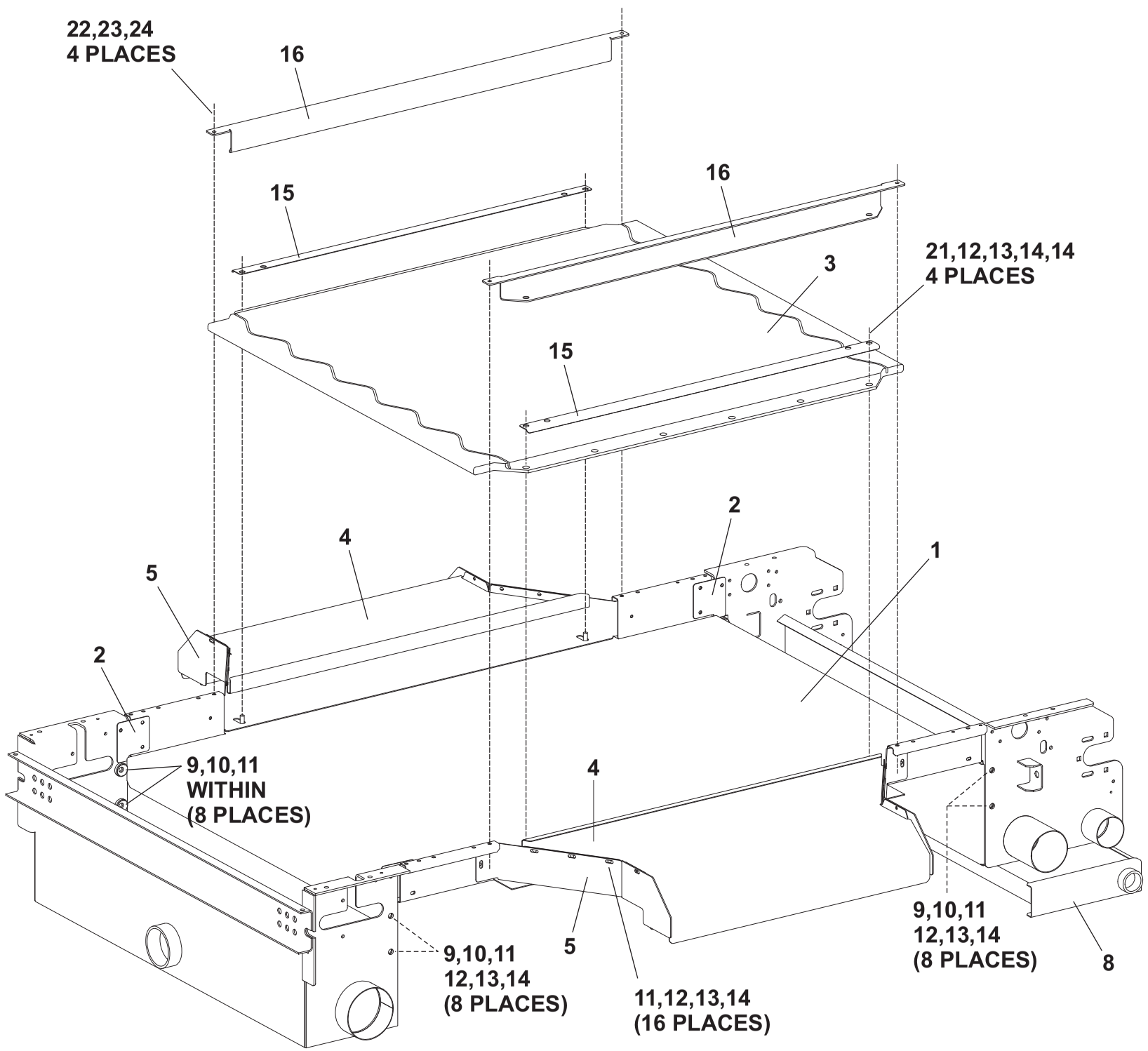

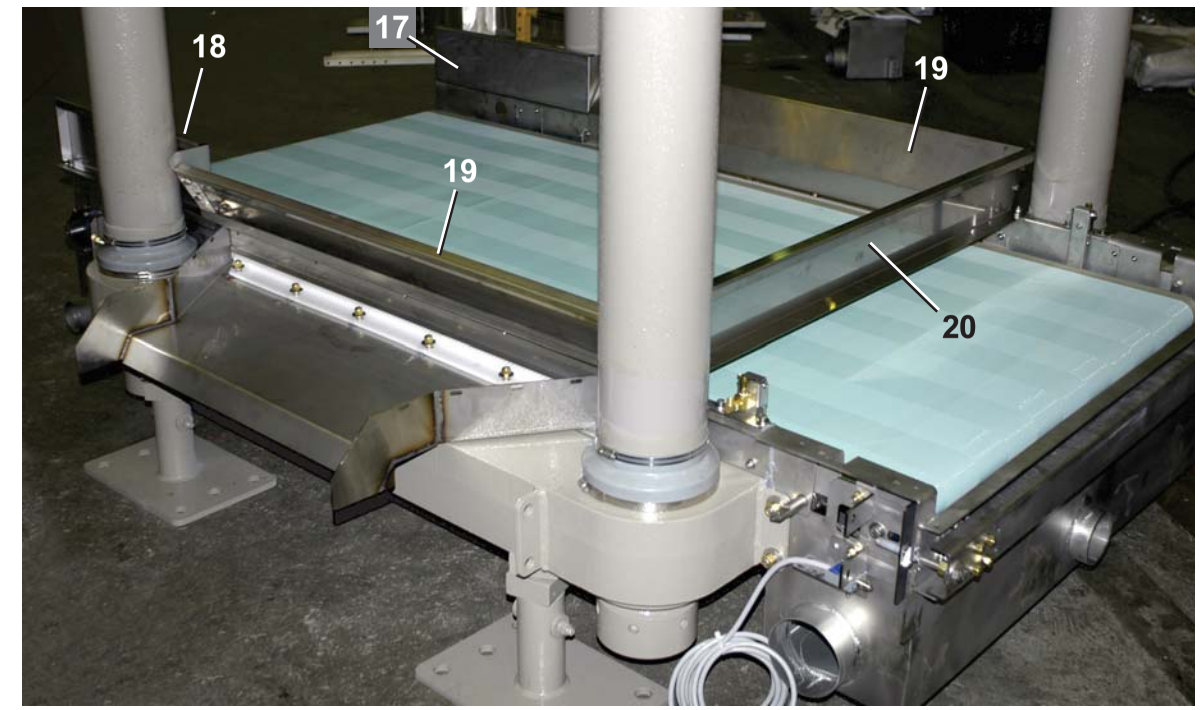

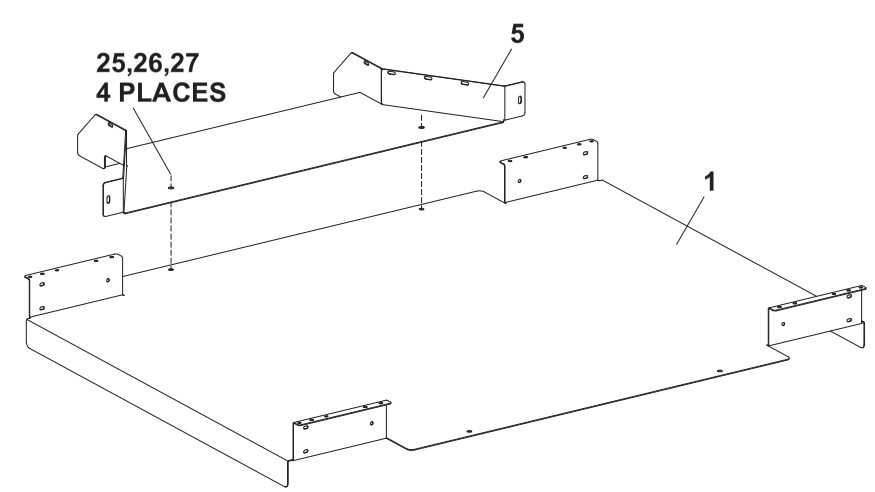

Detail: Bed liner and extention

Pellerin Milnor Corporation
P. O. Box 400, Kenner, LA 70063-0400

Litho in U.S.A.

Parts List—Conveyor Bed

Find the correct assembly first, then find the needed components. The item letters (A, B, C, etc.) assigned to assemblies are referred to in the "Used In" column to identify which components belong to an assembly. The item numbers (1, 2, 3, etc.) assigned to components relate the parts list to the illustration.

Used In	Item	Part Number	Description	Comments
.			----------ASSEMBLIES----------	
	A	ALC420164	CONV SIDE ASSY-MP16XX	
			----------COMPONENTS----------	
all	1	W4 24091	CONV BED 42W WLMT-MP16XX	
all	2	04 23508	BED END SEAL PLATE	
all	3	03 80010F	PRESS BED Z-GRV R/L DRAIN-MP16XX	
all	4	04 23620	BED EXT. SPLASH GUARD	
all	5	W4 23536A	CONV BED LINER EXTENSION WLMT	
all	6	04 21460	BELT HOLD DOWN BRKT-RT	
all	7	04 21460A	BELT HOLD DOWN BRKT-LF	
all	8	ALC420114	DRIP TRAY UNLOADEND-31BAR	
all	9	07 20607N	MK2 "O"RING RET PRE-PRESS	
all	10	60C108	ORING 1/2IDX3/16CS BUNA70#310	
all	11	15K180S	HXCAPSCR 1/2-13UNCAX2 18-8SS	
all	12	15U310S	FLATWASH-SS .53 X 1.37 .187T	
all	13	15U310	LOKWASHER REGULAR 1/2 SS18-8	
all	14	15G234B	HEXNUT 1/2-13UNC2B BRASS	
all	15	04 24213	PLASTIC BED HOLD DOWN STRIP	
all	16	04 24215	PLASTIC BED HOLD DOWN CHANNEL	
all	17	04 23505	SIDE UNLOAD END SSPRESS-RT	
all	18	04 23505A	SIDE UNLOAD END SSPRESS-LF	
all	19	04 23512	BED SIDE MIDDLE SECTION	
all	20	04 23513	CONV ENDGATE-MP16XX	
all	21	15K171	HEXCAPSCR 1/2-13UNC2X1+3/4 SS1	
all	22	15K052	HXCAPSCR 5/16-18UNC2AX3/4 SS18	
all	23	15U205	LOCKWASHER MEDIUM 5/16" 18-8SS	
all	24	15G186	HEXNUT 5/16-18UNC2 SS18-8	
all	25	15K086	HXCAPSCR 3/8-16NCX3/4 SS18-8	
all	26	24G030N	ROLLED WASH.379ID NYLTITE 37W	
all	27	15U245A	FLTWASH 25/64IDX1.25ODX3/32 S/	

Pellerin Milnor Corporation
P. O. Box 400, Kenner, LA 70063-0400

Litho in U.S.A.

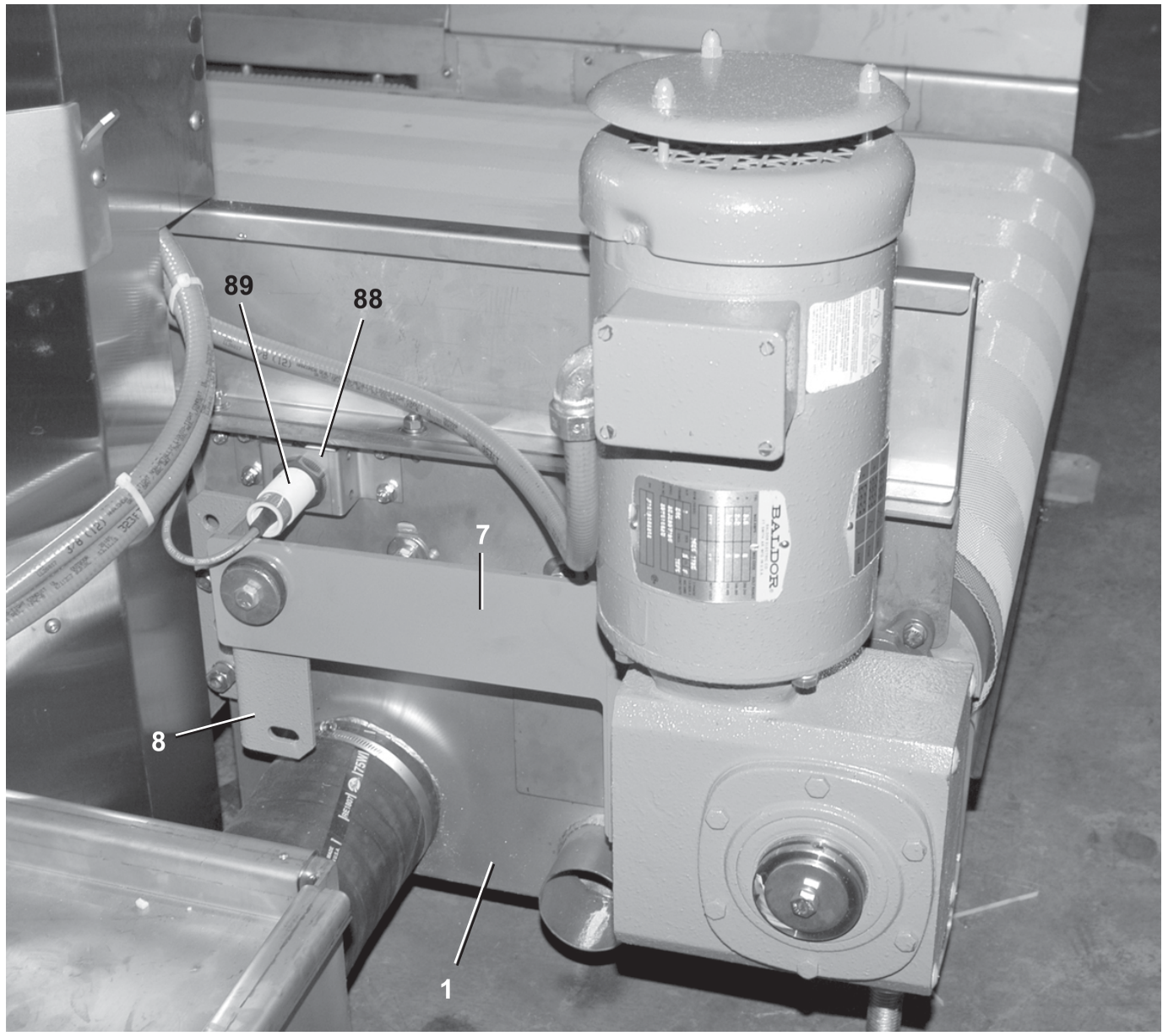

Conveyor Unload End - 0” Bed Extention (00A, 00B)

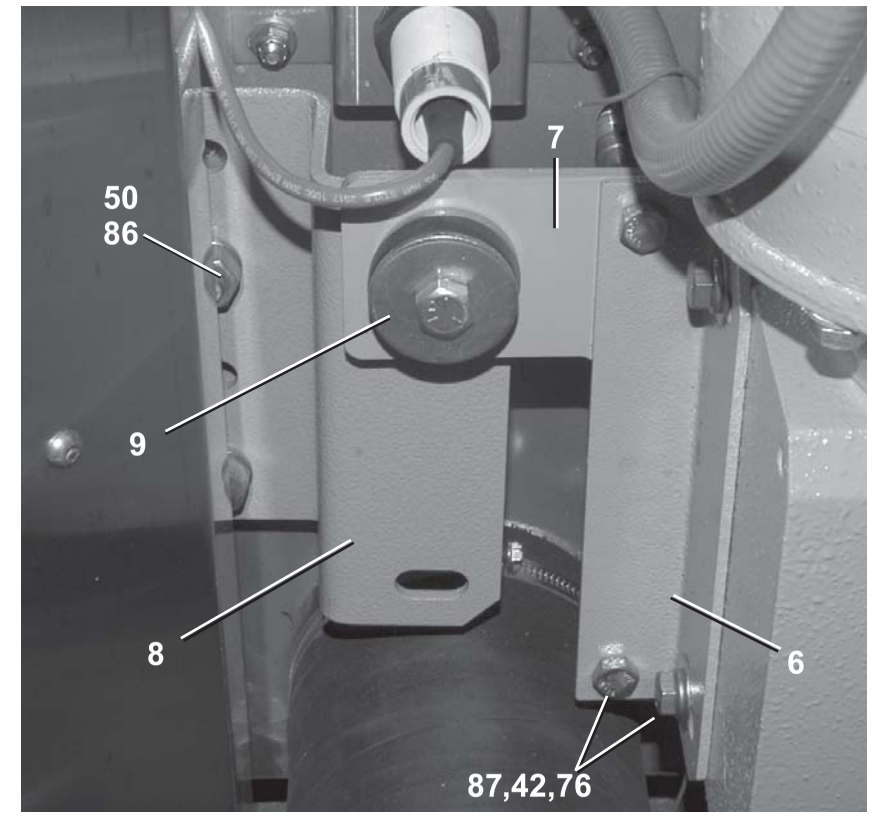

Torque Arm

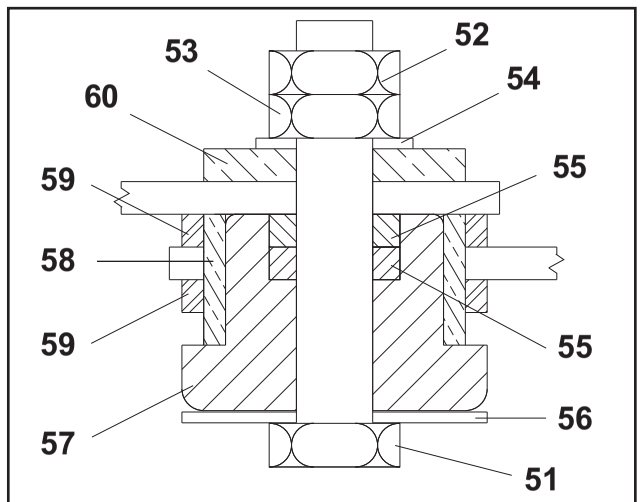

Detail A: Torque Arm Bushing

Pellerin Milnor Corporation
P. O. Box 400, Kenner, LA 70063-0400

Litho in U.S.A.

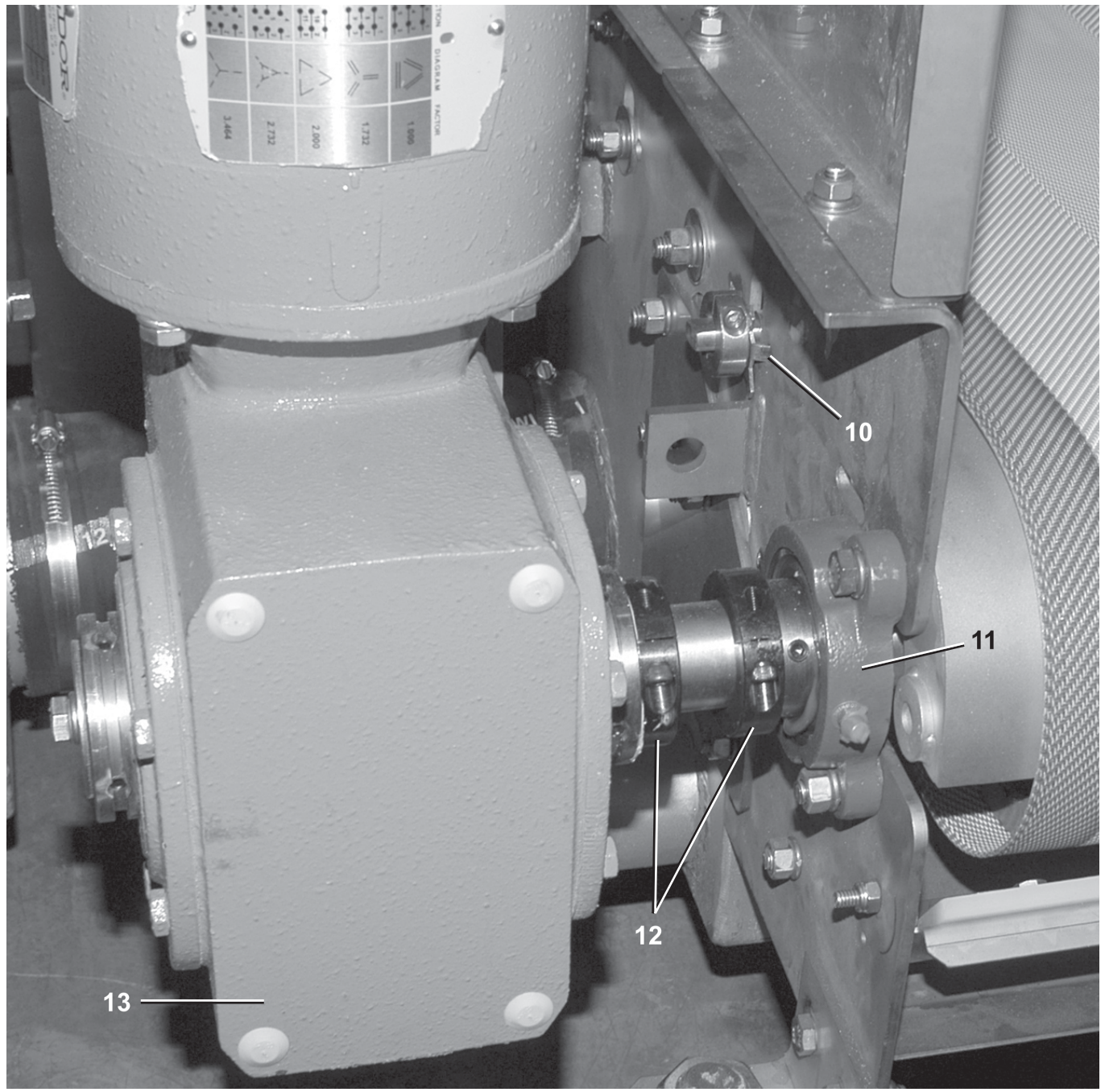

Conveyor Unload End Drive

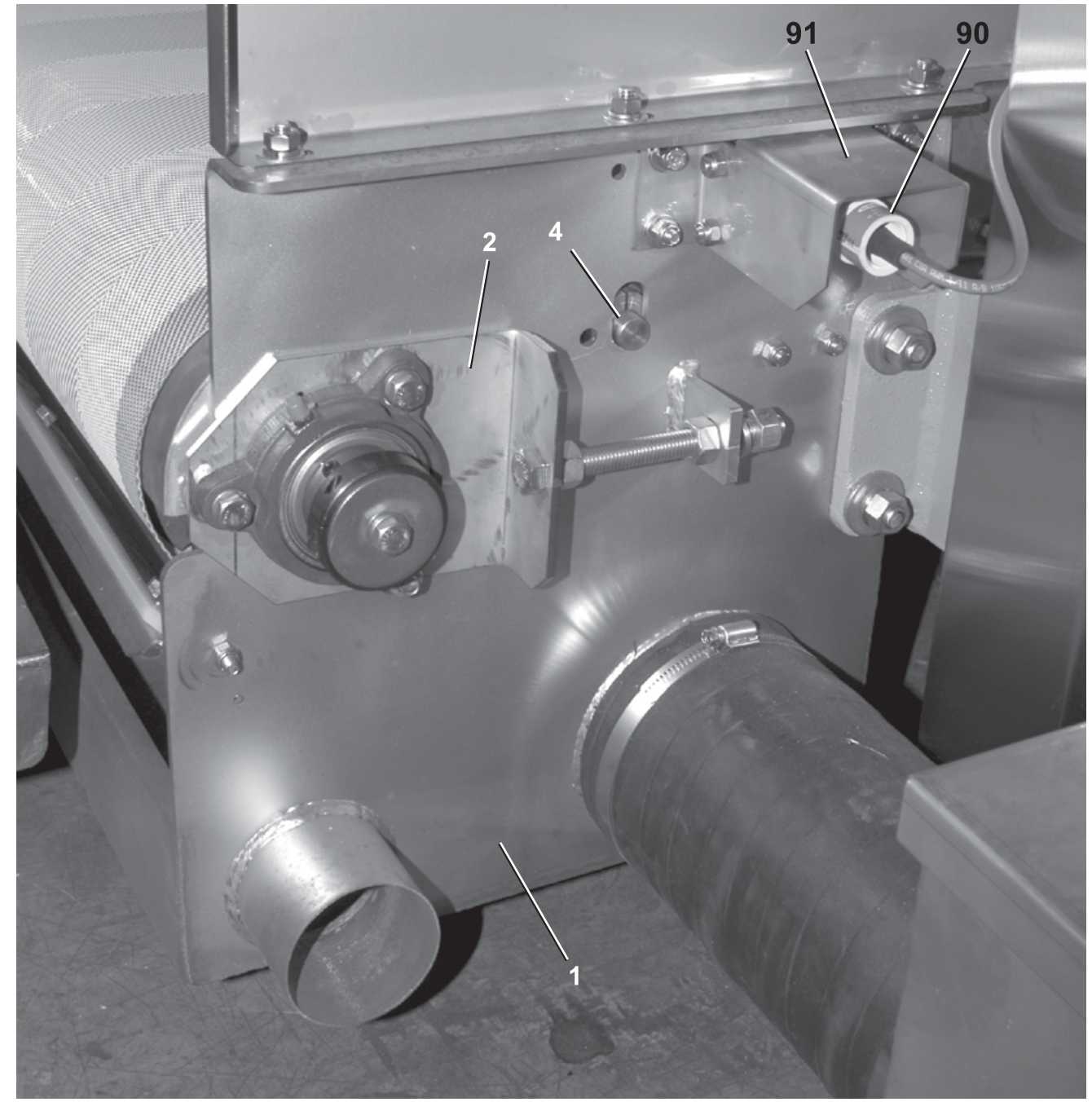

Conveyor Unload End - 0” Bed Extention (00A, 00B)

Pellerin Milnor Corporation
P. O. Box 400, Kenner, LA 70063-0400

Litho in U.S.A.

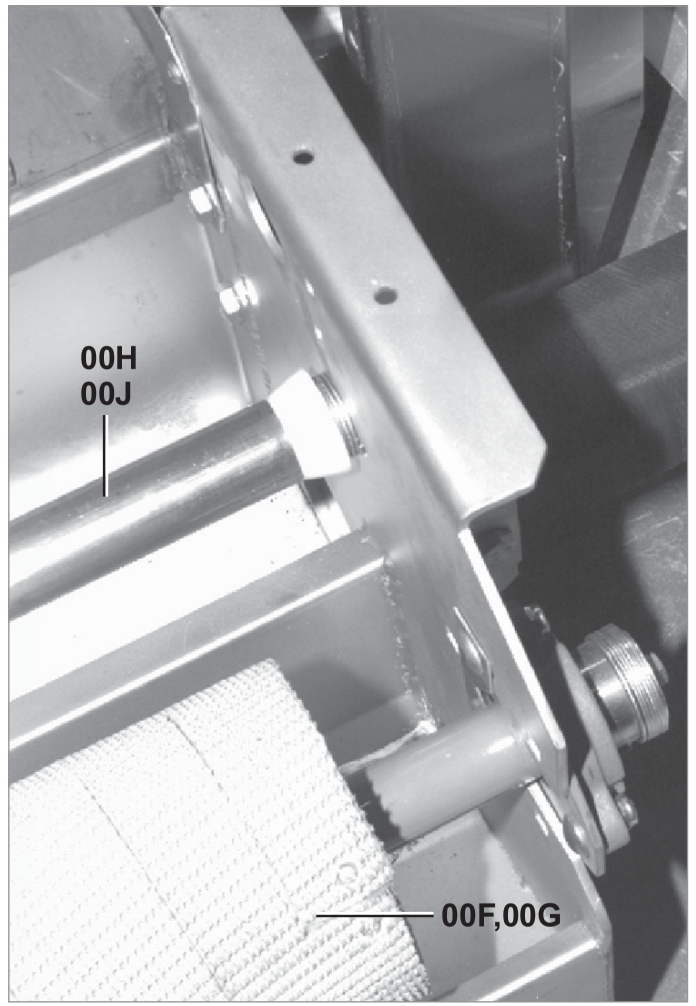

Top view: Drive Roller and Tension "Snubber" Roller

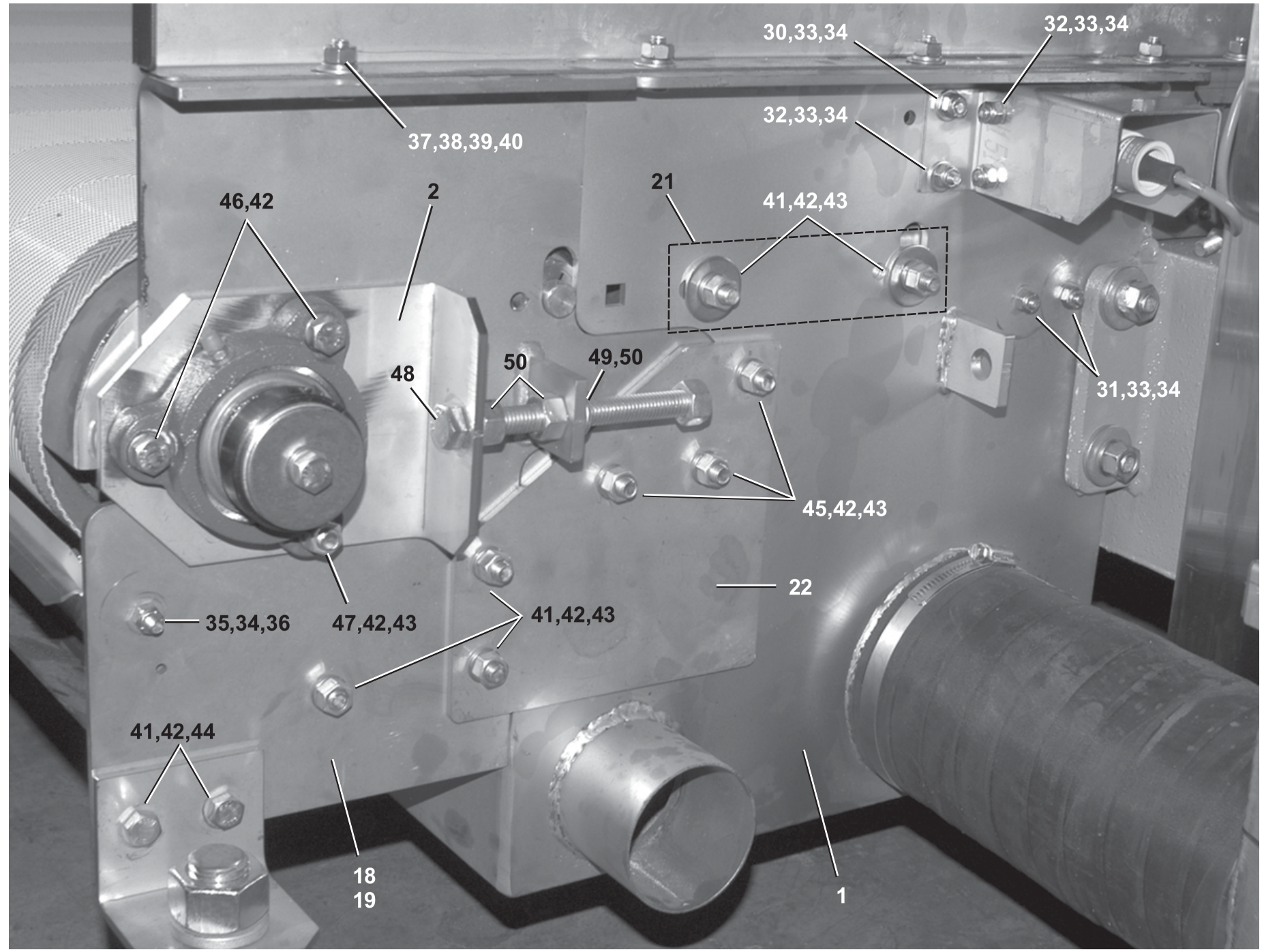

Conveyor Unload End: Typical hardware connections (00C shown)

Pellerin Milnor Corporation
P. O. Box 400, Kenner, LA 70063-0400

Litho in U.S.A.

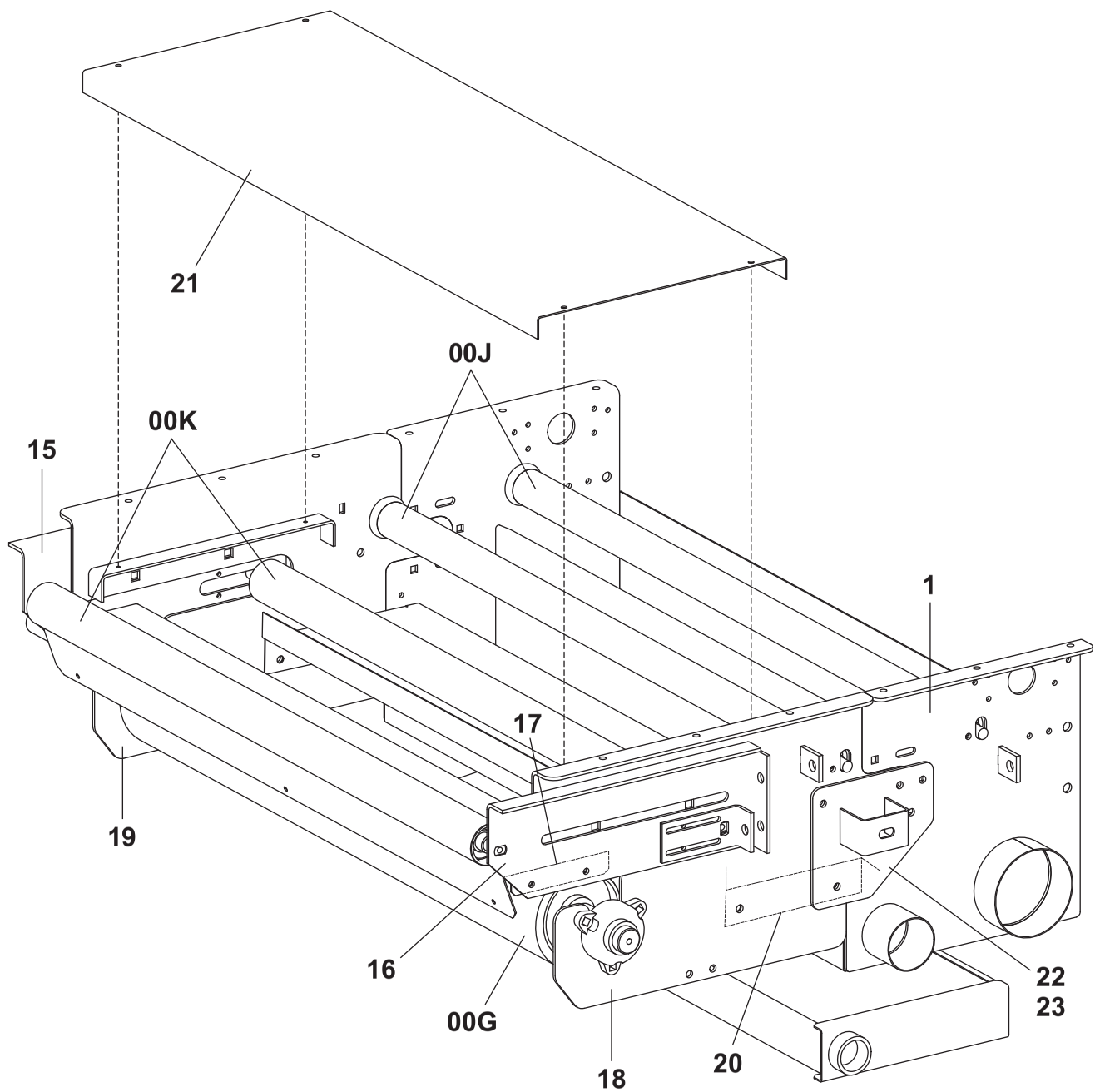

Conveyor Unload End : 12”-24” Bed Extention (00D)

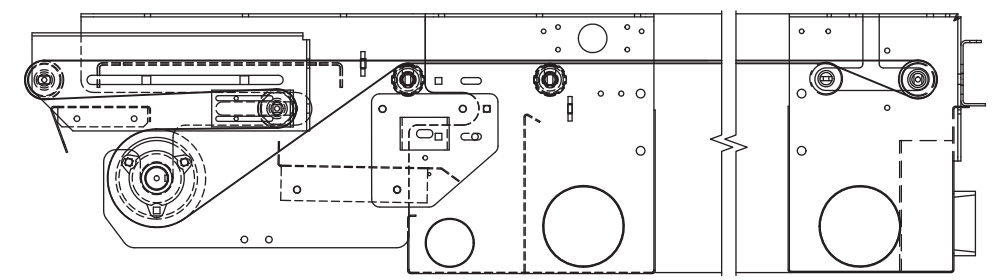

Belt Path for 12”-24” Bed Extention (00D)

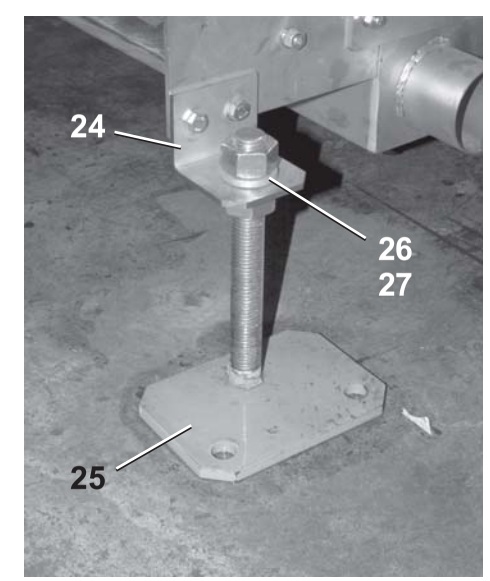

Support Leg for Bed Extentions (00C, 00D, 00E)

Pellerin Milnor Corporation
P. O. Box 400, Kenner, LA 70063-0400

Litho in U.S.A.

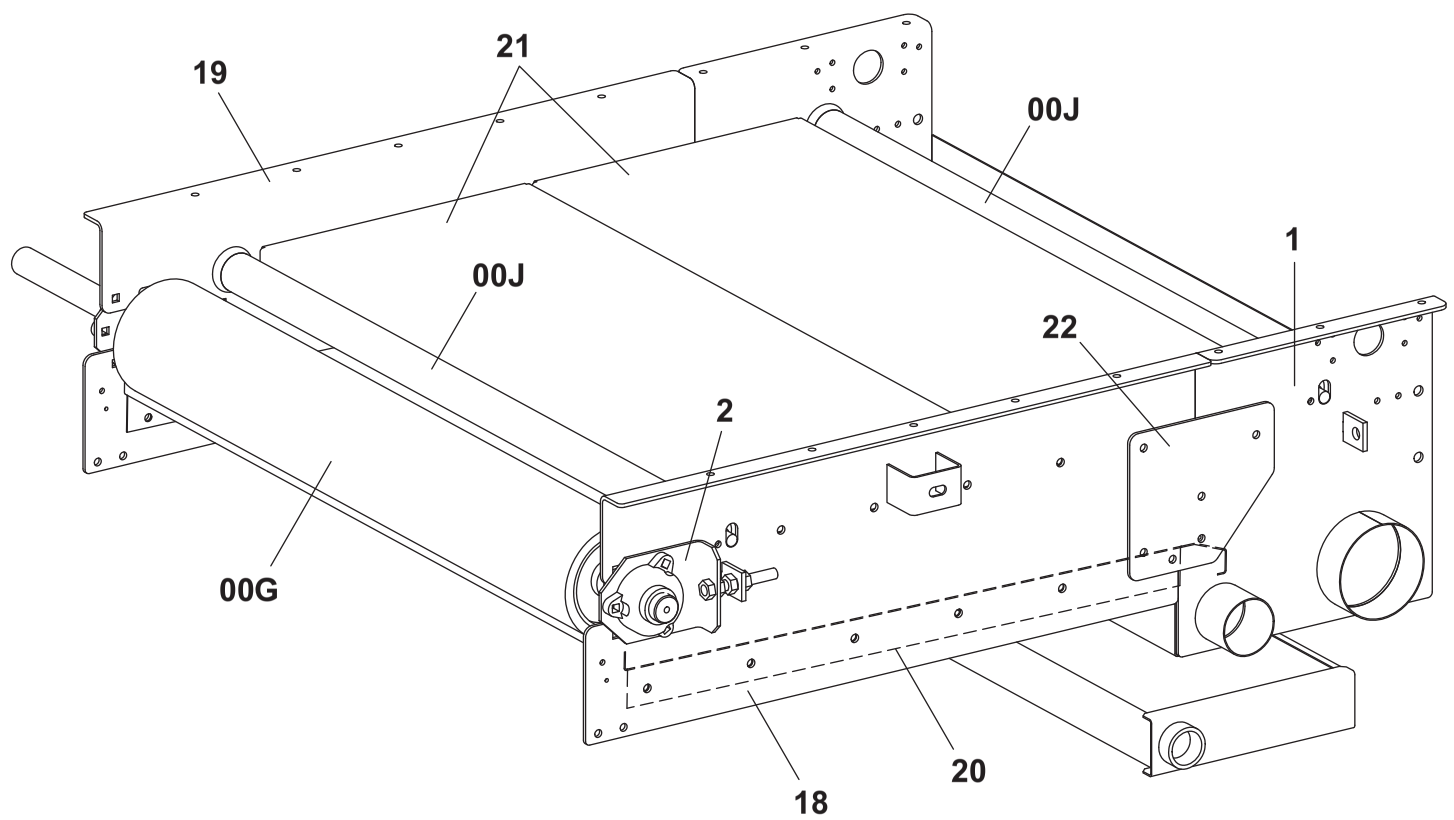

Conveyor Unload End : 35” Bed Extention (00E)

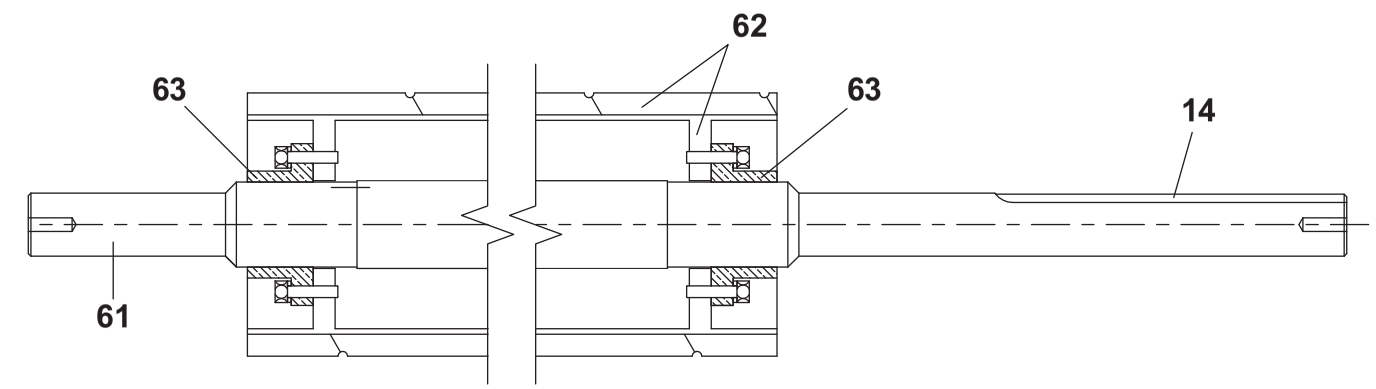

Detail A: Drive Roller (00F, 00G)

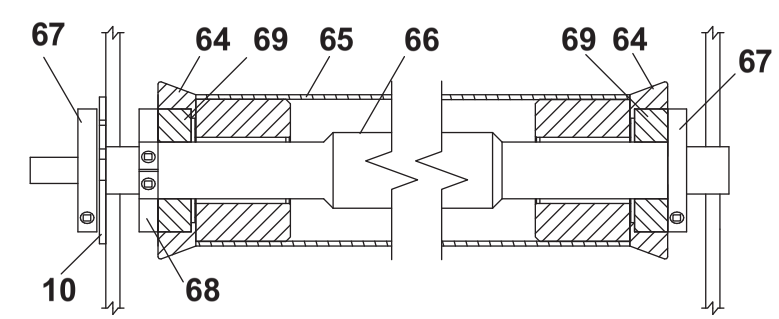

Detail B: Tension Roller ”Snubber” (00H,00J)

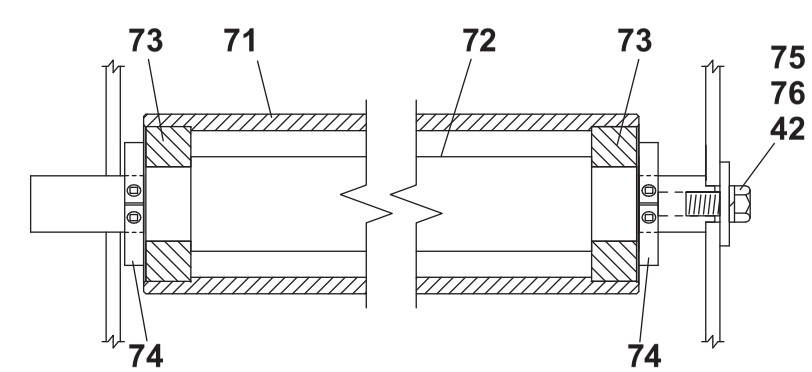

Detail C: Tension Roller (00K)

Pellerin Milnor Corporation
P. O. Box 400, Kenner, LA 70063-0400

Litho in U.S.A.

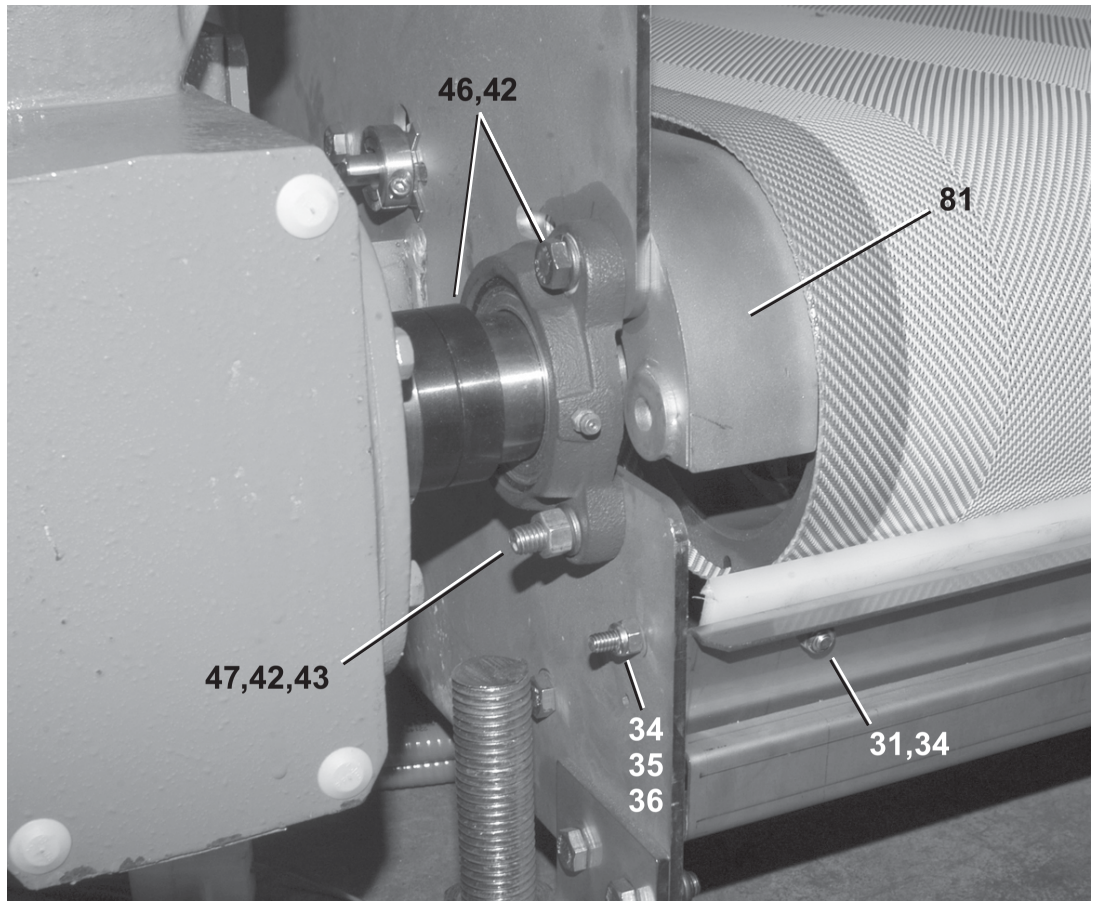

Installing Fenders

To install fenders to the discharge roller, remove the idler end roller to release tension on the belt. Move the belt to find the bolts of the flange bearings. Remove these bolts. Put in the fenders. Install the bolts through the fender, the bearing mounting holes, and the flange bearings.

Install the Roll Wiper Assembly.

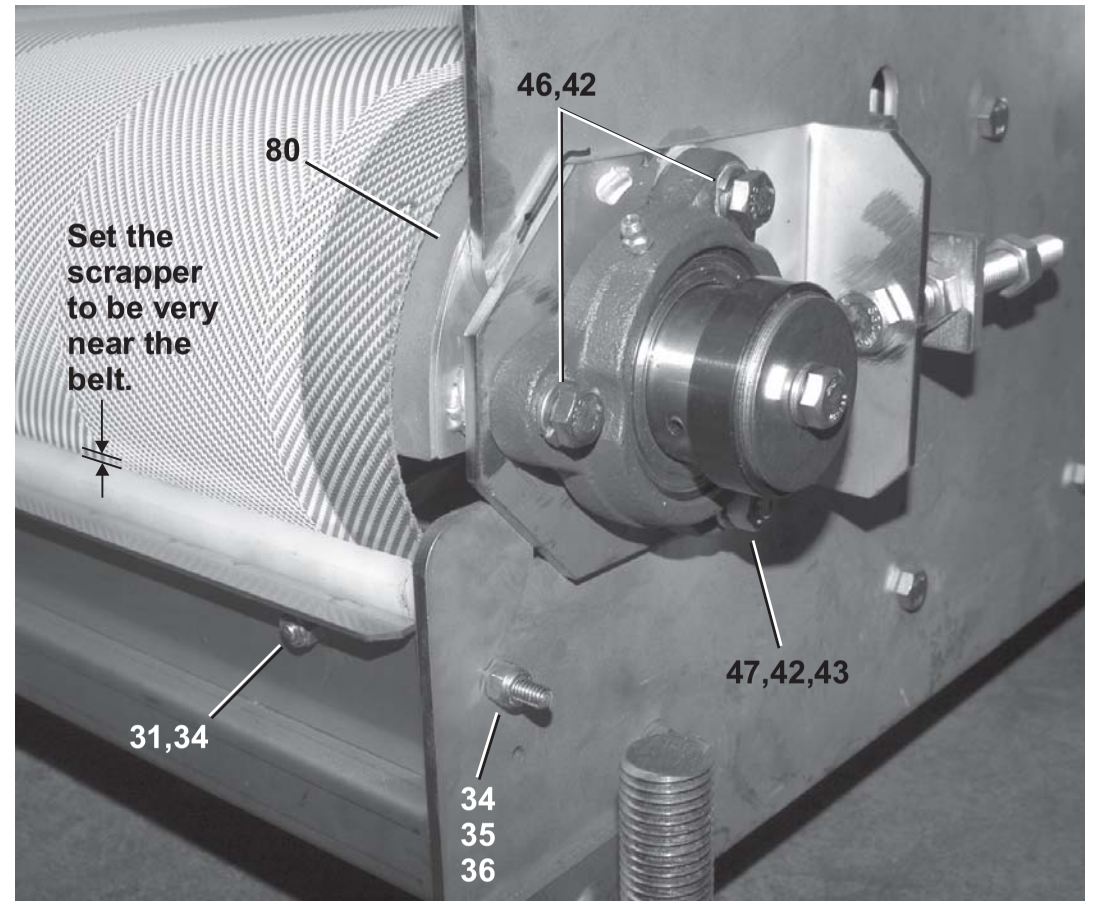

Roll Wiper Assembly

Parts are available to add the Roll Wiper Assembly to the conveyor. See the parts list.

The picture shows the installed roll wiper assembly. The bolt and the nut (items 34,35) are a pivot point for the Roll Wiper Assembly adjustment. Set the scraper to be very near the belt. Tighten the bolt to lock the position of the scraper.

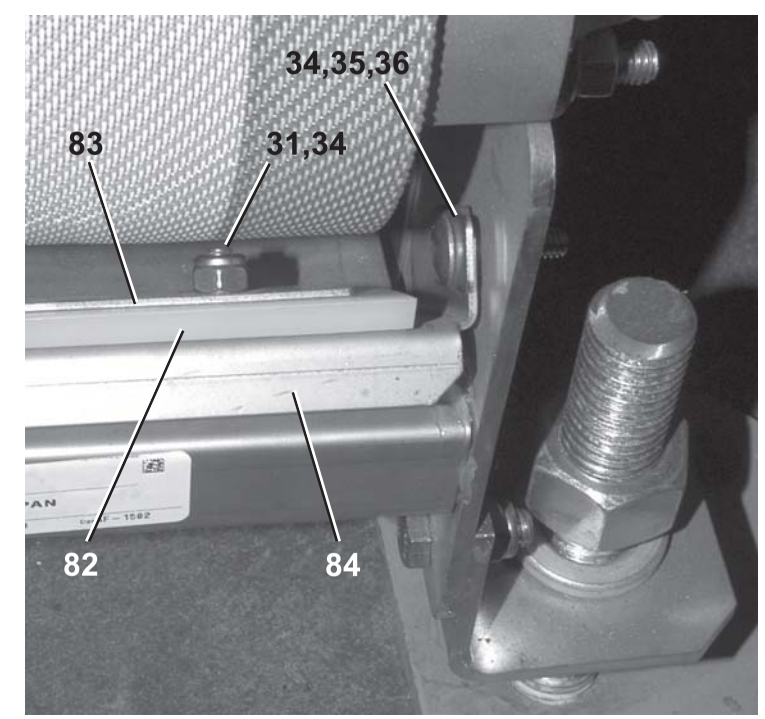

Pellerin Milnor Corporation
P. O. Box 400, Kenner, LA 70063-0400

Litho in U.S.A.

Parts List—Conveyor Unload End Assemblies

Find the correct assembly first, then find the needed components. The item letters (A, B, C, etc.) assigned to assemblies are referred to in the "Used In" column to identify which components belong to an assembly. The item numbers (1, 2, 3, etc.) assigned to components relate the parts list to the illustration.

Used In	Item	Part Number	Description	Comments
----------ASSEMBLIES----------				
	A	ALC420174	UNLOADEND DRIVE 51W ASSEMBLY	MP1Axx , 0” EXTENTION AVAILABLE ONLY
	B	ALC420177	UNLOAD END DRIVE ASSEMBLY	MP15xx, MP16xx MLP15xx, MLP16xx 0” EXTENTION
	C	ALC420180	UNLOAD END DRIVE ASSM 8" EXT	MP15xx, Mp16xx MPL5xx, MPL16xx 8” EXTENTION
	D	ALC420182	UNLOAD END DRIVE ASSM 24" EXT	MP15xx, Mp16xx MPL15xx, MPL16xx 12-24” EXTENTION
	E	ALC420184	UNLOAD END DRIVE ASSM 35" EXT	MP15xx, MPL15xx MP16xx, MPL16xx 35” EXTENTION
	F	APC50005	51W DRIVE LAGGED 1.437 INPUT	MP1Axx
	G	APC42005	42W DRIVE LAGGED 1.44-SSPRESS	MP15xx, Mp16xx MPL5xx, MPL6xx
	H	ALC50120	DRIVE SNUBBER ROLLER 51W	MP1Axx
	J	ALC50059	DRIVE SNUBBER ROLLER-SSPRESS	MP15xx, Mp16xx MPL5xx, MPL6xx
	K	ALC50060A	TENSION ROLLER 42W SS-BRNG	MP15xx, Mp16xx MPL5xx, MP16xx
	L	ALC420130	UNLOADEND ROLLER WIPER ASSY	MP15xx, Mp16xx MPL5xx, MPL6xx
	M	ALC420130A	UNLOADEND ROLL WIPER 51W ASSY	MP1Axx
----------COMPONENTS----------				
A	1	W4 23626	MP1A03 UNLOAD END WLMT-SSPRESS	
BCDE	1	W4 23602	UNLOAD END WLMT-SSPRESS	
ABCE	2	04 23204	DRIVE ROLLER ADJ BRKT	
all	6	04 22999	TORQARM MTG ANGLE	
B	7	04 23534	TORQARM-SSPRESS CONV	
ACDE	7	04 23578	TORQARM +8-SSPRESS CONV	
ABCD	8	04 22997	TORQUEARM MTG BRKT-SSPRESS	
all	9	ALC420063	TORQUE ARM BUSHING ASSEMBLY	
ABCDE	10	06 20070	LOCKING WASHER ROLLER SHAFT	

Parts List, cont.—Conveyor Unload End Assemblies

Used In	Item	Part Number	Description	Comments
D	17	04 20366	ROLLER BLOW PIPE MTG BRKT	
C	18	W4 23587	BRNG SUPP 8" EXT-LEFT WLDMT	
D	18	W4 23583	BRNG SUPP 24" EXT-LEFT WLDMT	
E	18	W4 23554	BRNG SUPP 35" EXT-LEFT WLDMT	
C	19	W4 23587A	BRNG SUPP 8" EXT-RT WLDMT	
D	19	W4 23583A	BRNG SUPP 24" EXT-RT WLDMT	
E	19	W4 23554A	BRNG SUPP 35" EXT-RT WLDMT	
C	20	04 23588	8" ENTEND DRIP PAN	
D	20	04 23584	24" ENTEND DRIP PAN	
E	20	04 23556	35" ENTEND DRIP PAN	
C	21	04 23585	UNLOADEND BELT SUPP-8"EXT	
D	21	04 20365	CAKE SUPPORT BED	
E	21	04 23555	BELT SUPPORT 35" EXTENSION	
C	22	04 23589	8" PRESS EXT. DOUBLER PLATE	
D	22	W4 23586	24" EXT DBL PLATE WLDMT-LEFT	
E	22	04 23557	PRESS EXTENSION DOUBLER PLATE	
D	23	W4 23586A	24" EXT DBL PLATE WLDMT-RT	
ACDE	24	04 20356	UNLOADEND LEG-SSPRESS CONV+35L	
ACDE	25	W4 20358	FOOTPAD WLMT-UNLOADEND SSPRESS	
ACDE	26	15U400	LOCKWASHER MEDIUM 1" ZINCPL	
ACDE	27	15G250	HXNUT 1-8UNC2B SAE ZNC GR2	
all	30	15K033	BUTSOKCAPSCR 1/4-20X5/8 SS18-8	
all	31	15N186	HXCAPSCR 1/4-20X3/4 SS18-8	
all	32	15K041S	HEXCAPSCR 1/4-20UNC2AX1 SS18-8	
all	33	15U188	FLTWASH 1/4 STD COMM SS18-8	
all	34	15G164NE	HEXLOKNUT NYL 1/4-20 UNC2A SS.	
all	35	15A008	CARBOLT 1/4"-20UNC2X1" SS18-8	
all	36	04 20616	CONLO.BELT WASHER	
all	37	15K052	HXCAPSCR 5/16-18UNC2AX3/4 SS18	
all	38	15U200S	FLATWASHER US STD 5/16 SS18-8	
all	39	15U205	LOCKWASHER MEDIUM 5/16" 18-8SS	
all	40	15G186	HEXNUT 5/16-18UNC2 SS18-8	
all	41	15K096	HEXCAPSCR 3/8-16UNC2X1SS18-8	
all	42	15U260	LOCKWASHER MEDIUM 3/8 SS18-8	
all	43	15G206B	HEXNUT 3/8-16UNC2 BRASS	
all	44	15G201	HXLOKNUT 3/8-16 NYL/SS TYPE NE	

Pellerin Milnor Corporation
P. O. Box 400, Kenner, LA 70063-0400

Litho in U.S.A.

Parts List—Conveyor Unload End Assemblies

Find the correct assembly first, then find the needed components. The item letters (A, B, C, etc.) assigned to assemblies are referred to in the "Used In" column to identify which components belong to an assembly. The item numbers (1, 2, 3, etc.) assigned to components relate the parts list to the illustration.

Used In	Item	Part Number	Description	Comments
all	45	15A010	CARRSCR 3/8-16UNC2X1 SPECIAL	
all	46	15K112	HXCAPSCR 3/8-16X1+1/2 SS18-8	
all	47	15A021S	CARBOLT 3/8-16X1.5 SS18-8	
all	48	15K203S	HEXTAPSCR 1/2-13UNC2AX5 SS18-8	
all	49	15U300	LOKWASHER REGULAR 1/2 ZINC PLT	
all	50	15G234B	HEXNUT 1/2-13UNC2B BRASS	
all	51	15K144C	HEXCAPSCR 7/16-14UNC X 2.5 GR	
all	52	15G222	HXFINJAMNUT 7/16-14UNC2B ZINC	
all	53	15G222C	HEXNUT 7/16-14UNC2B ZINC GR2	
all	54	15U271	LOKWASH INTOOTH 7/16ZN	
all	55	15U312	HARD FWASH 3/4ODX33/64IDX.115	
all	56	15U202	FLATWSHR.50ID1.75OD11GA ZNC	
all	57	60B065	RUBBER MNT CTR BONDED 40 DURO	
all	58	04 20796	SLEEVE=TORQUE ARM BUSHING	
all	59	02 18571A	PISTON ROD WASHER-.25"TK	
all	60	15U490	FLTWASH 1+1/2X17/32X1/4 ZINC	
G	61	X4 23224	CONV ROLLER SHAFT-1.44DRIVE	
F	61	X4 21090	DRIVE ROLLER SHAFT-51W BED	
G	62	54C006	VGORPXTLAGDRMPULLY#D5S40XT20	
F	62	54C006A	VGORPXTLAGDRMPULLY#T5S48XT20	
GF	63	54C006XTB	VGORP XT BUSH 1 15/16 B#XTB20X	
JH	64	X4 23126	TRACKING ROLLER BUSHING S/S	
J	65	X4 23126A	TUBING 2" OD X 42.00 LG 304 SS	
H	65	X4 21093	TUBING 2"OD X 51.00LG 304SS	
J	66	X4 23109	IDLER SHAFT .75DX45.50LG	
H	66	X4 21091	IDLER SHAFT.75DX54.50LG	
JH	67	54JH10625S	SHFTCOL 5/8X1+5/16X.437 SS C-T	
JH	68	54J10625S2	SHFCOL 5/8X1+5/16X.437 2PC SS	
JH	69	54AB75001	BALBRG.75X1.625X.437#SSR122RS	
K	71	X4 23433	TENSION ROLLER 2.50D-ER14 BRNG	
K	72	X4 23434	TENSION ROLLER SHAFT-SS BRNG	
K	73	54AB25001	BALBRG 25X52X15MM-#SS62052RS	

Parts List, cont.—Conveyor Unload End Assemblies

Used In	Item	Part Number	Description	Comments
K	74	54JH10750S	SHFTCOL 3/4X1+1/2X.5 SS C-T	
K	75	15K083S	HXCAPSCR 3/8-16NCX1/2 SS18-8	
K	76	15U245	FLTWASH 3/8 STD COMM 18-8 SS	
all	77	W2 21162A	SUPPLY 5COMP WLMT=4232 LF MNT	
all	78	W2 21162	*SUPPLY 5COMP WLMT=4232F	
all	80	W4 21162	ROLLER SIDE GUARD WLMT-RT	
all	81	W4 21162A	ROLLER SIDE GUARD WLMT-LF	
L	82	04 21118	UHMW ROLLER WIPER 42W	
M	82	04 21167	ROLLER WIPER BRKT-51W	
L	83	04 21119	ROLLER WIPER STRAP-42W	
M	83	04 21168	UHMW ROLLER WIPER 51W	
L	84	04 21120	ROLLER WIPER BRKT-42W	
M	84	04 21169	ROLLER WIPER STRAP-51W	
all	86	15U310	LOKWASHER REGULAR 1/2 SS18-8	
all	87	15K086	HXCAPSCR 3/8-16NCX3/4 SS18-8	
all	88	03 BC2X3P	BRKT=1STG PRESS PHOTOEYE+CVR	
all	89	09RPE010E	P.E. EMITTER AC #SM303E W/30'	
all	90	03 BZ0204	BRKT=PHOTOEYE SSPRESS CONV	
all	91	09RPE010R	PHOTOEYE RECEIVER AC	
.				

Pellerin Milnor Corporation
P. O. Box 400, Kenner, LA 70063-0400

Litho in U.S.A.

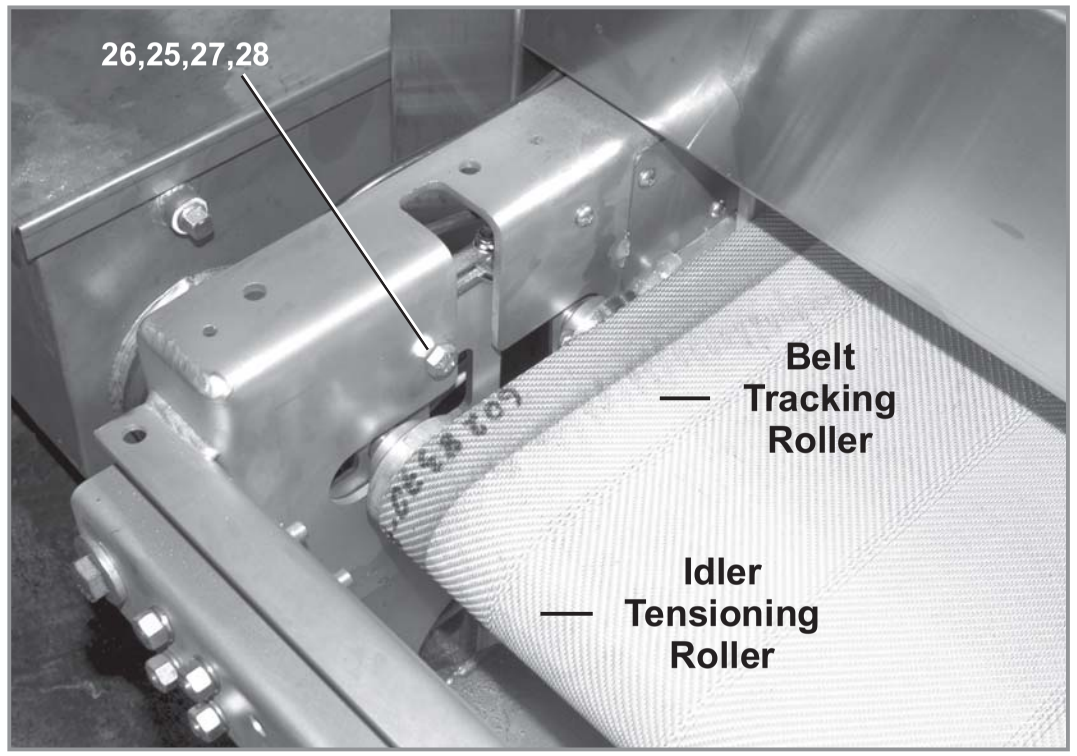

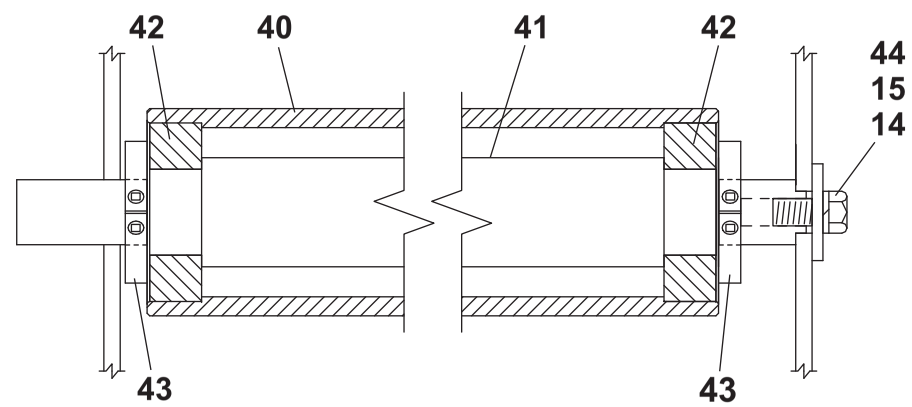

Detail A: Idler (Tensioning) Roller
(00C,00D)

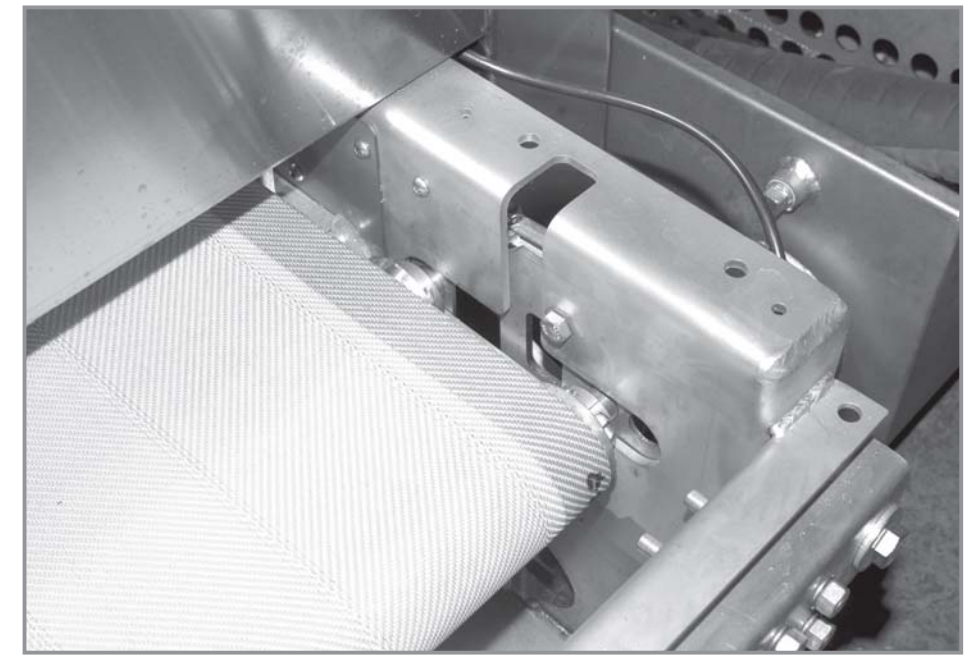

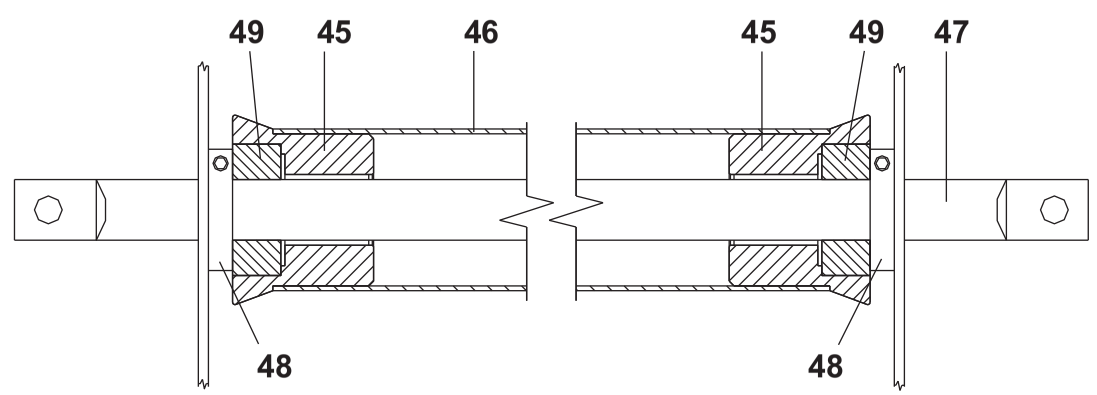

Detail B: Belt Tracking Roller
(00E,00F)

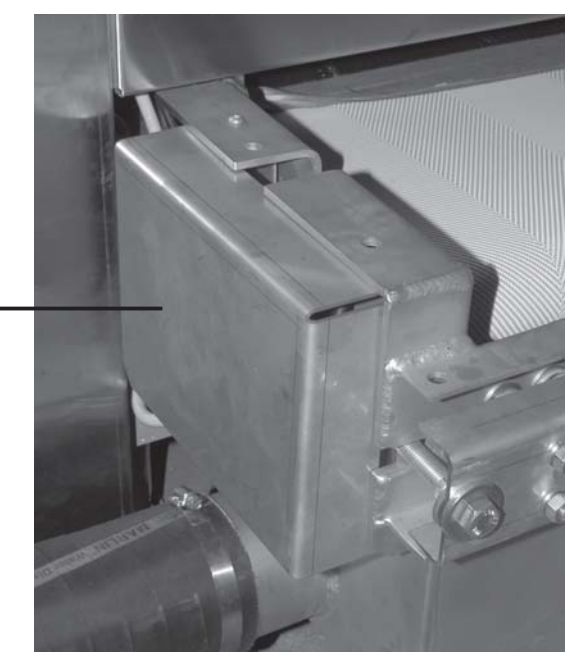

Pellerin Milnor Corporation
P. O. Box 400, Kenner, LA 70063-0400

Litho in U.S.A.

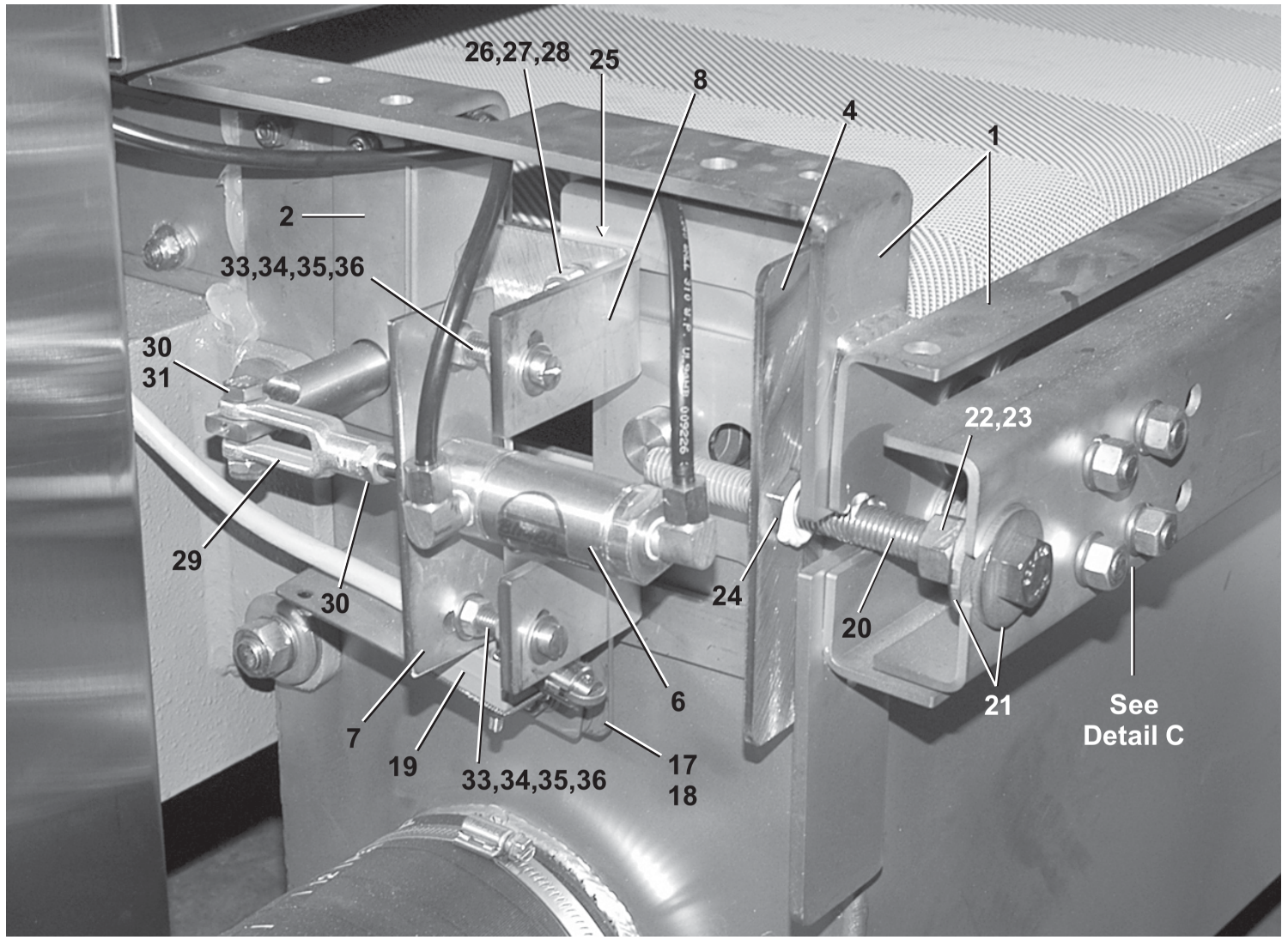

Load End Rollers
& Belt Tracking

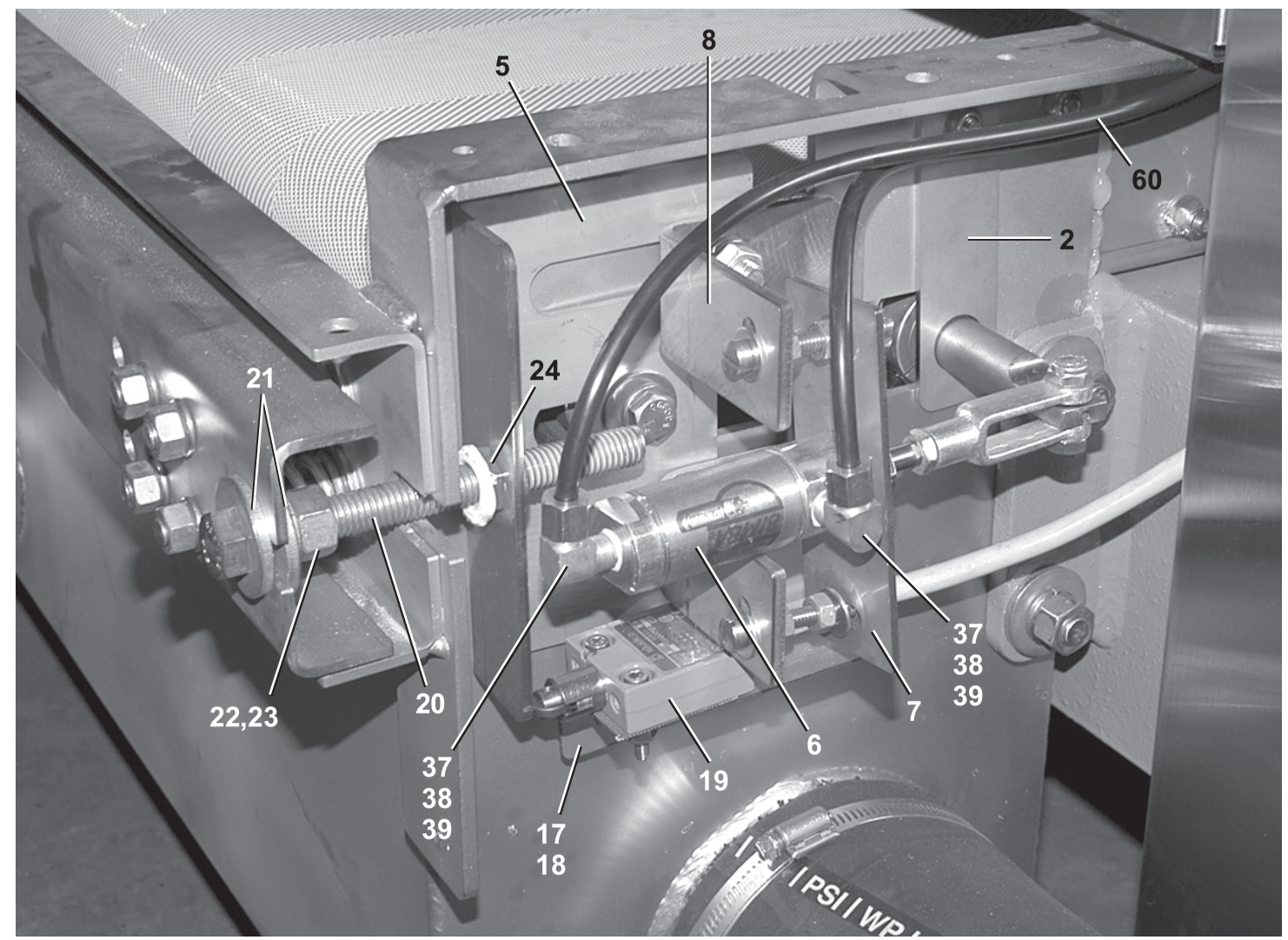

Pellerin Milnor Corporation
P. O. Box 400, Kenner, LA 70063-0400

Litho in U.S.A.

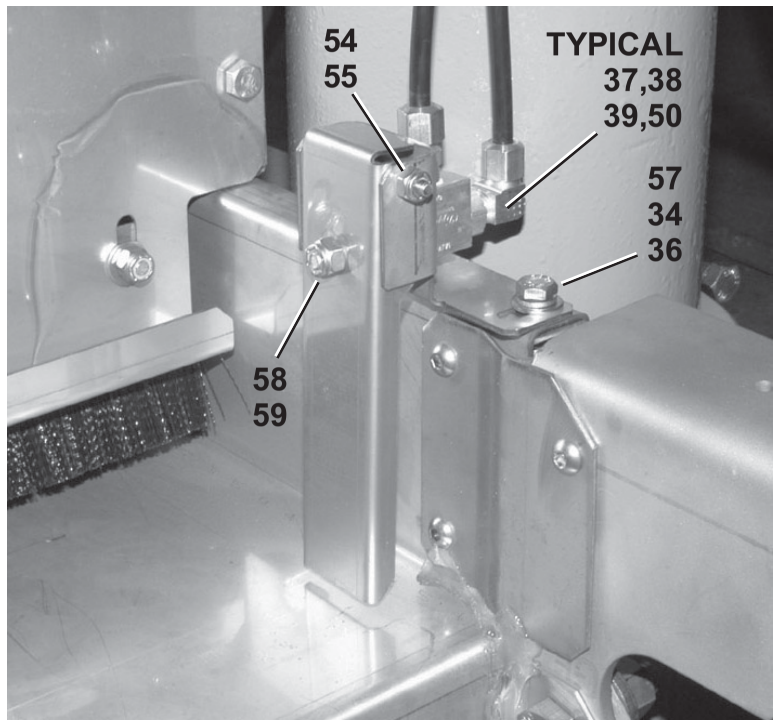

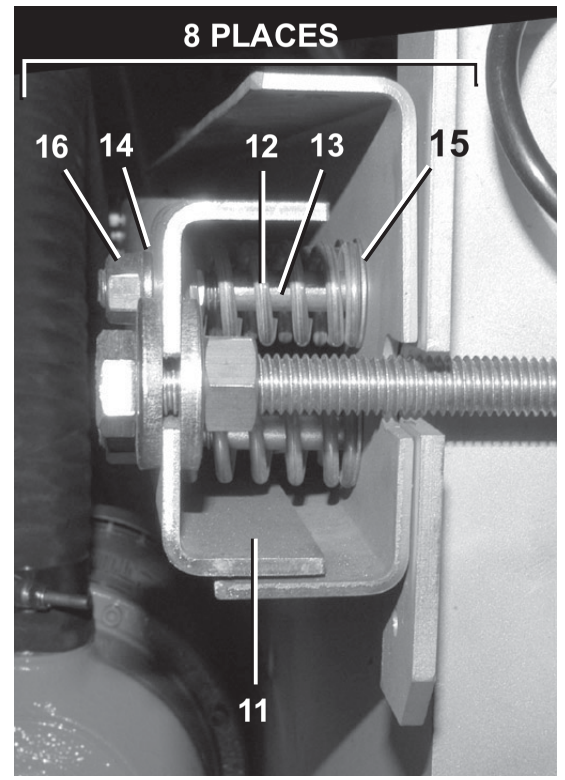

DETAIL C: TENSION BAR

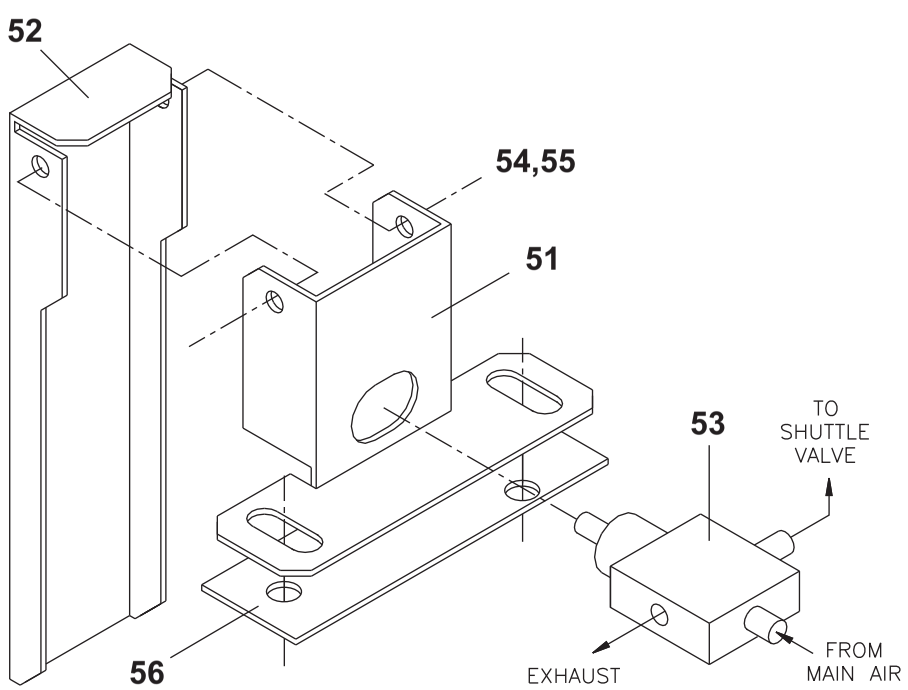

DETAIL D: BELT TRACKING SWITCH

Detail D: Photo Eye

Find the correct assembly first, then find the needed components. The item letters (A, B, C, etc.) assigned to assemblies are referred to in the "Used In" column to identify which components belong to an assembly. The item numbers (1, 2, 3, etc.) assigned to components relate the parts list to the illustration.

Used In	Item	Part Number	Description	Comments
			----------ASSEMBLIES----------	
	A	ALC420178	LOADEND IDLER ASSEMBLY	MP15xx, MP16xx MPL5xx, MPL6xx
	B	ALC420185	LOADEND IDLER 51W ASSEMBLY	MP1Axx
	C	ALC50060A	TENSION ROLLER 42W SS-BRNG	MP15xx, MP16xx MPL5xx, MPL5xx
	D	ALC50122	TENSION ROLLER 51W-SS BRNG	MP1Axx
	E	ALC50065	BELT TRACKING ROLLER-SSPRESS	MP15xx, Mp16xx MPL5xx, MPL6xx
	F	ALC50121	BELT TRACKING ROLLER-51W	MP1Axx
	G	ALC420100	BELT TRACKING SWITCH ASSY	
			----------COMPONENTS----------	
A B	1 1	W4 23615 W4 23624	LOAD END WLMT-SSPRESS MP1A03 LOAD END WLMT-SSPRESS	
all	2	04 23205B	TRACK ROLLER SUPPORT PLATE	
A B	3 3	04 23203 04 21088	LOADEND CROSS BRACE LOADEND CROSS BRACE-51W BED	
all	4	04 20568	TENSION ROLLER ADJ BRKT-LF	
all	5	04 20568A	TENSION ROLLER ADJ BRKT-RT	
all	6	27C211	AIRCYL1+1/16BOREX1/2"STK DBL	
all	7	04 23214	BELT TRACKING CYL MTG BRKT	
all	8	04 23215	BELT TRACKING BRKT	
all	9	04 23232	BELT TRACKING COVER-RT	
all	10	04 23232A	BELT TRACKING COVER-LEFT	
A B	11 11	04 20570 04 21089	BELT TENSIONING BAR BELT TENSION BAR-51W BED	
all	12	02 18187	SPRING=OUTER DOOR 60 WEHU	
all	13	04 20571	STUD 3/8-16UN X 3.25LG	
all	14	15U260	LOCKWASHER MEDIUM 3/8 SS18-8	
all	15	15U245	FLTWASH 3/8 STD COMM 18-8 SS	
all	16	15G206B	HEXNUT 3/8-16UNC2 BRASS	
all	17	04 20596	BELT STOP SW.MTG BRKT-SSPRESS	
all	18	04 20597	BELT STOP SW MTG PLATE	

Pellerin Milnor Corporation
P. O. Box 400, Kenner, LA 70063-0400

Litho in U.S.A.

Parts List—Load End Rollers & Belt Tracking

Find the correct assembly first, then find the needed components. The item letters (A, B, C, etc.) assigned to assemblies are referred to in the "Used In" column to identify which components belong to an assembly. The item numbers (1, 2, 3, etc.) assigned to components relate the parts list to the illustration.

Used In	Item	Part Number	Description	Comments
all	21	15U310S	FLATWASH-SS .53 X 1.37 .187T	
all	22	15U310	LOKWASHER REGULAR 1/2 SS18-8	
all	23	15G234B	HEXNUT 1/2-13UNC2B BRASS	
all	24	15G225H	HEXFLGNUT 1/2-13 SERRATED 18-8	
all	25	15G214SS	HXJAMNUT 3/8-16UNC 18-8 SS	
all	26	15K100	HEXCAPSCR 3/8-16X1+1/4 SS18-8	
all	29	17A007	ADJ YOKE END-CAD 5/16-24NF #27	
all	30	15G191	HXFINJAMNUT 5/16-24UNC2 ZINC G	
all	31	15K062	HEXCAPSCR 5/16-18X1 18-8SS	
all	32	15G193	HEXLOKNUT 5/16-18UNC2A NYL STL	
all	33	15N200	FILMACSCR 1/4-20UNCX2 SS18-8 S	
all	34	15U188	FLTWASH 1/4 STD COMM SS18-8	
all	35	15U181	LOCKWASHER MEDIUM 1/4 SS18-8	
all	36	15G164NE	HEXLOKNUT NYL 1/4-20 UNC2A SS.	
all	37	53A031B	BODY-EL90MALE.25X1/8 #269C-42B	
all	38	53A500	SLEEVE DELRIN 1/4"OD#60PT-4	
all	39	53A501	TUBE INSERT .163"OD #63PT-4-40	
A	40	X4 23433	TENSION ROLLER 2.50D-ER14 BRNG	
B	40	X4 21094	TENSION ROLLER 2.38DX51.75LG	
A	41	X4 23434	TENSION ROLLER SHAFT-SS BRNG	
B	41	X4 21095	TENSION ROLL SHAFT 1"0DX55"LG	
all	42	54AB25001	BALBRG 25X52X15MM-#SS62052RS	
all	43	54JH10750S	SHFTCOL 3/4X1+1/2X.5 SS C-T	
all	44	15K083S	HXCAPSCR 3/8-16NCX1/2 SS18-8	
all	45	X4 23126	TRACKING ROLLER BUSHING S/S	
all	46	X4 23126A	TUBING 2" OD X 42.00 LG 304 SS	
all	46	X4 21093	TUBING 2"OD X 51.00LG 304SS	
A	47	X4 23109B	TRACKING SHAFT .75DX50.25LG	
B	47	X4 21092	TRACKING SHAFT .75DX59.25LG	
all	49	54AB75001	BALBRG.75X1.625X.437#SSR122RS	
all	50	53A059A	NUT 1/4"BR.HOLYOKE AND #61A-4	

Parts List, cont.—Load End Rollers & Belt Tracking

Used In	Item	Part Number	Description	Comments
all	51	04 23217	BELT TRACKING SWITCH BRKT	
all	52	04 23219	BELT TRACKING ACTUATOR	
all	53	96N005	3WAY AIROP CONT.VLV.CLIPP#MJV3	
all	54	15N154A	PHILPSHDMACHSCR 10-24 X2" 18-8	
all	55	15G126	HXLOCKNUT NYLON 10-24 UNC SS N	
all	56	X4 23218	BELT TRACKING TAP STRIP	
all	57	15K033	BUTSOKCAPSCR 1/4-20X5/8 SS18-8	
all	58	15N174	HXCAPSCR 1/4-20UNC2X5/8SS18-8	
all	59	15U342	FLTWASH .255/.260IDX.750DX.125	
all	60	60E004TE	1/4"OD X.170"ID NYL(BLK)TUBING	
all	61	09RPE010E	P.E. EMITTER AC #SM303E W/30'	
all	62	09RPE010R	PHOTOEYE RECEIVER AC	