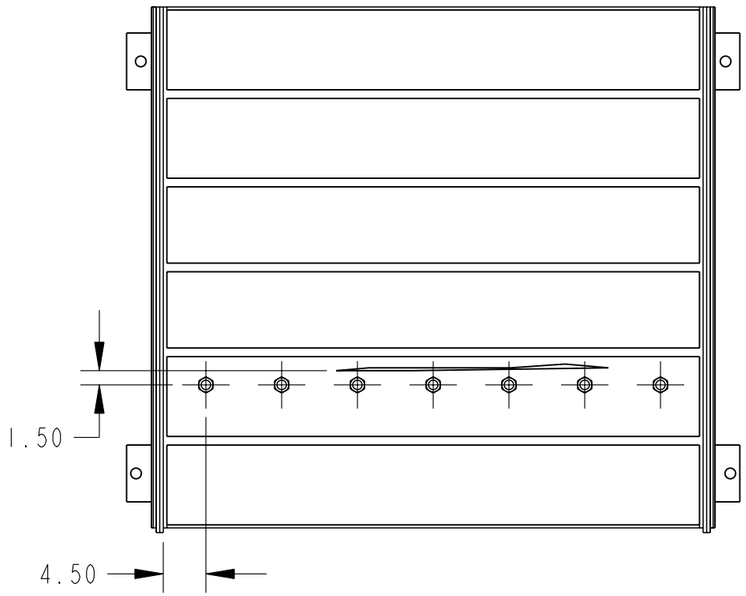

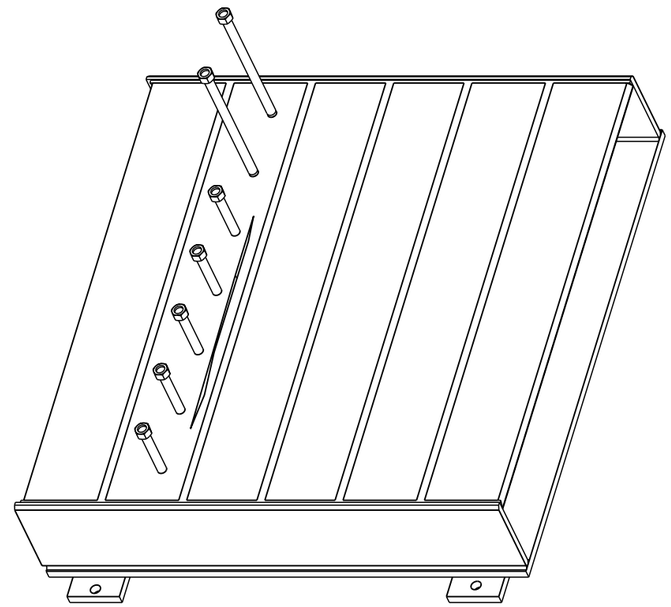

PRESS BASE PLATE REPAIR INSTRUCTION

1. REMOVE ZIG-ZAG BED LINER
2. A SET OF JACKING BOLTS AND A TEMPLATE ARE PROVIDED WITH THE KIT. USING THE TEMPLATE TO LOCATE THE BOLT HOLES, DRILL AND TAP HOLES IN THE BASE PLATE TO ACCOMMODATE THE BOLTS.
3. INSTALL ALL JACKING BOLTS AND SCREW THEM ALL THE WAY DOWN UNTIL THEY ARE TOUCHING THE FLOOR PLATE.
4. USING A STRAIGHT EDGE ALONG THE LINE OF BOLTS, TIGHTEN EACH BOLT AS NEEDED TO RAISE THE TOP PLATE UNTIL IT HAS RETURNED TO FLAT.
5. INDIVIDUALLY BACK OFF EACH BOLT ONE INCH, APPLY LOCTITE TO THE THREAD THAT WILL ENGAGE THE PLATE, THEN SCREW DOWN AND RETIGHTEN THE BOLT.
6. CUT OFF EACH BOLT SEGMENT PROTRUDING FROM THE PLATE AND GRIND DOWN FLUSH WITH THE PLATE.
7. GAUGE OUT, CLEAN, AND WELD THE CRACK CLOSED KEEPING IN WITH GOOD WELDING PRACTICE.
8. GRIND THE REPAIR FLAT AND SMOOTH

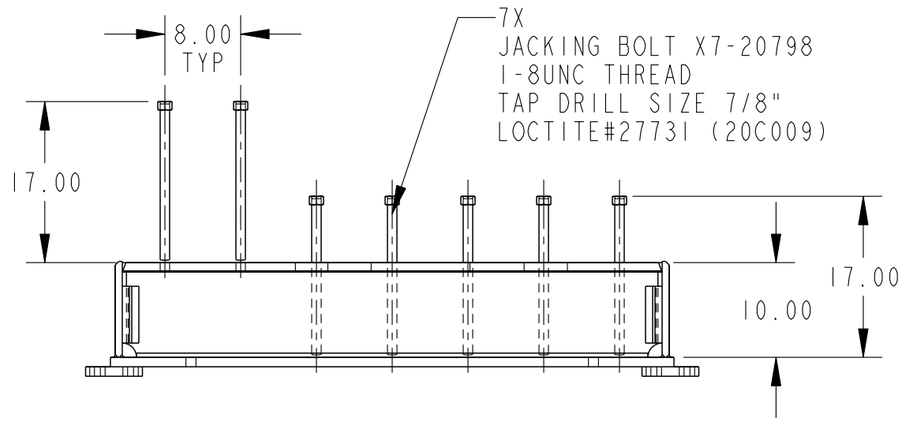

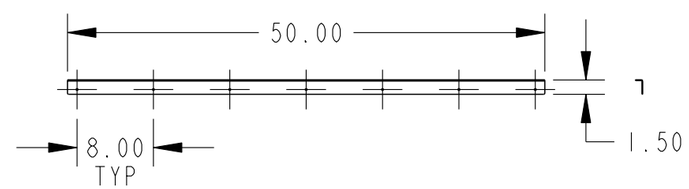

TEMPLATE (P/N 07-20799)

This is the property of the Pellerin Milnor Corporation. It is loaned upon the condition that it shall not be copied, reproduced in any manner, or be submitted to others without our consent, or used in any way detrimental to the interest of this company, and shall be returned upon demand.

INTRALINK Model Rev.Ver	1.0
INTRALINK Drawing Rev.Ver	1.0

CAD Pro/E

ECN	LET	BY	ACTION
2007512	A	KSA	RELPRO

TOLERANCE: FRACTIONS: ±1/64 INCHES: X.X ± 0.1, X.XX ± 0.03, X.XXX ± 0.005
UNLESS OTHERWISE SPECIFIED
SYMBOLS PER ANSI Y14.5M ANGLES: ± 1.0°

MATERIAL MADE FROM DESCRIPTION	MILNOR MATL P/N
---	---

B | SCALE: 0.063 | DWN BY: KSA | Sheet 1 of 1 | DATE: Dec-14-07

PELLERIN MILNOR CORPORATION
P.O. BOX 400, KENNER, LA 70063-0400 (SUBURBAN NEW ORLEANS)

PART NAME	PART NO.
PRESS BASE FRAME TOP PL REPAIR	KUCDBFWR01