Published Manual Number/ECN: H000000035/2003223N
- **Publishing System: TPAS**
- **Access date: 05/27/03**
- **Document ECN's: Latest Available**

Kit Instruction—H000000035

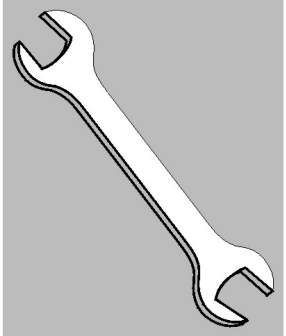

Read the Safety Manual

PELLERIN MILNOR CORPORATION POST OFFICE BOX 400, KENNER, LOUISIANA 70063-0400, U.S.A.

Please Read

About the Manual Identifying Information on the Cover

The front cover displays pertinent identifying information for this manual. Most important, are the published manual number (part number) /ECN (date code). Generally, when a replacement manual is furnished, it will have the same published manual number, but the latest available ECN. This provides the user with the latest information applicable to his machine. Similarly all documents comprising the manual will be the latest available as of the date the manual was printed, **even though older ECN dates for those documents may be listed in the table of contents**.

When communicating with the Milnor factory regarding this manual, please also provide the other identifying information shown on the cover, including the publishing system, access date, and whether the document ECN's are the latest available or exact.

References to Yellow Troubleshooting Pages

This manual may contain references to "yellow pages." Although the pages containing troubleshooting procedures are no longer printed on yellow paper, troubleshooting instructions, if any, will be contained in the easily located "Troubleshooting" chapter or section. See the table of contents.

Trademarks of Pellerin Milnor Corporation

The following, some of which may be used in this manual, are trademarks of Pellerin Milnor Corporation:

Ampsaver®	Dye-Extractor®	Gear Guardian®	Milnet®	Staph-Guard®
Autolint®	Dyextractor®	Hands-Off®	Milnor®	System 4®
Auto-Purge®	E-P Express®	Hydro-Cushion®	Miltrac	System 7®
Autovac	E-P OneTouch®	Mildata®	Miltron	Totaltrol®
CBW®	E-P Plus®			

Comments and Suggestions

Help us to improve this manual by sending your comments to:

Pellerin Milnor Corporation
Attn: Technical Publications
P. O. Box 400
Kenner, LA 70063-0400

Fax: (504) 469-1849

POWER SUPPLY TO PROCESSOR BOARD | BATTERY BACK BOARD | SIGNAL CONDITIONER BOARD TO ANALOG TO DIGITAL BOARD

POST MASTER 120VAC
1HF
1MTP-1
1MTP-3
2F
1MTP-5
A
SEE W6DRYGTCB LINE 06
H
N
G

ESPS1
POWER SUPPLY
120VAC TO +12VDC -12VDC +5VDC
LOCATED IN REMOTE SWITCH PANEL BOX
G2
G1
+5V
+12V
-12V
1MTD-4
1MTD-5
1MTD-3
1MTD-1
1MTD-6
V1
V2
V3
2G
1MTA31-9
1MTA31-3
1MTA31-5
1MTA31-7

SEE W6DRYGTCB LINE 10
B
SEE W6DRYGTCB LINE 00
C
TO MILNET SERIAL LINK
ESP
1MTA32-1
1MTA32-2
1MTA32-3
1MTA32-4
ESH
TO MILNET SERIAL LINK

BPB
PROCESSOR BOARD
LOCATED IN REMOTE SWITCH PANEL BOX
1MTA31-10
1MTA31-3
1MTA31-2
1MTA31-1
1MTA34-1
1MTA31-2
1MTA34-3
1MTA34-4
1MTA30-7
1MTA30-9
DLL
DLL
DLH
DLH
TXD
CTS
WCD-1
WCD-2
WCD-3
WCD-4
WCD-7
WCD-5
1MTA33-1
1MTA33-3

BBB1
BATTERY BACKUP BOARD
LOCATED IN REMOTE SWITCH PANEL BOX
2MTA41-3
2MTA41-2
2MTA41-1
313
2G
V2

WIRE COLORING CODE

WIRE NO.	VOLTAGE	WIRE COLOR
V1	+5V	BLUE
V2	+12V	BLUE/ORANGE
V3	-12V	BLUE/BLACK
2G	GND	BLUE/WHITE
SRH	SERIAL HIGH	BLUE/RED
SRL	SERIAL LOW	BLUE/BLACK
ESH	MILNET HIGH	BLUE/RED
ESP	MILNET LOW	BLUE/BLACK
-	24VAC	BLUE/RED
-	120VAC	RED
2F	CONTROL GROUND	RED/WHITE
-	INPUTS	BLUE/BLACK
-	OUTPUTS	RED/BLACK

T2
INLET TEMPERATURE PROBE
T1R
T1W
1MTA2-3
1MTA2-2

T3
OUTLET TEMPERATURE PROBE
T2R
T2W
2MTA2-3
2MTA2-2

BSC1
SIGNAL CONDITIONER BOARD
LOCATED IN LEFT CONTROL BOX
1MTA1-4
1MTA1-2
1MTA1-6
1MTA1-8
1MTA1-3
2MTA1-2
2MTA1-6
2MTA1-8
2MTA1-4
2MTA1-3
A1H
V2
V3
2G
A1L
V2
V3
2G
A2H
A2L
1MTA55-6
1MTA5510
1MTA55-9
1MTA55-8
1MTA55-7
1MTA5410
1MTA54-9
1MTA54-8
1MTA55-4
1MTA55-5

BAD1
ANALOG TO DIGITAL BOARD
LOCATED IN LEFT CONTROL BOX
OFF ON
1 2 3 4 5 6 7 8
SRH
SRL
1MTA52-3
1MTA52-1
SEE W6DRYGGMC LINE 01
E
SRH
1MTA52-4
F
SRL
1MTA52-2
SEE W6DRYGGMC LINE 01
1MTA51-9
1MTA51-10
1MTA51-7
1MTA51-8
1MTA51-5
1MTA51-6
1MTA51-3
1MTA51-4
2G
2G
V3
V2
V1
B
SEE W6DRYGTCB LINE 00
A
SEE W6DRYGGMC LINE 07
B
SEE W6DRYGGMC LINE 06
C
SEE W6DRYGGMC LINE 05
D
SEE W6DRYGGMC LINE 04

POST MASTER 120VAC
1HF
2MTP-1
2MTP-3
2F
2MTP-5
A
SEE W6DRYGTCB LINE 05
B
SEE W6DRYGGMC LINE 13
H
N
G

ESPS2
120VAC TO +12VDC -12VDC +5VDC
LOCATED IN LEFT CONTROL BOX
G2
G1
+5V
+12V
-12V
2MTD-4
2MTD-5
2MTD-3
2MTD-1
2MTD-6

SEE W6DRYGIIA LINE 00
D
SEE W6DRYGTCB LINE 00
C
2G
V3
V2
V1

NOTES:
1. 1MTA1, 1MTA2, 2MTA1, 2MTA2 ARE LOCATED ON BSC1 (SIGNAL CONDITIONER BOARD).
2. 1MTA51, 1MTA52, 1MTA53, 1MTA54 ARE LOCATED ON BAD1 (ANALOG TO DIGITAL BOARD).
3. 1MTP, 1MTD ARE LOCATED ON ESPS1 (POWER SUPPLY).
4. 1MTA31, 1MTA32, 1MTA33, 1MTA34 ARE LOCATED ON BPB (PROCESSOR BOARD).
5. 2MTP, 2MTD ARE LOCATED ON ESPS2 (POWER SUPPLY).
6. 2MTA41 IS LOCATED ON BBB-1 (BATTERY BACKUP BOARD).

00 01 02 03 08 07 08 09 10 11 12 13 14 15 16 17 18 19

W6DRYGTCB
93517D

W6DRYGTCB
MICRO 6 SYSTEMS
SCHEMATIC: THERMOCOUPLES + PROCESSOR
PELLERIN MILNOR CORPORATION

DIGITAL TO ANALOG, OUTPUT BOARD, INPUT/OUTPUT BOARD

ROTATIONAL SAFETY

MODULATING GAS VALVE

W6DRYGGME
MICRO 6 SYSTEMS
SCHEMATIC: BOARD TO BOARD WIRING
MODIFIED FOR LANDIS & GYR FIRE CONTROLLER
110V1P50HZ/120V1P60HZ
PELLERIN MILNOR CORPORATION

W6DRYGGME
93051D

BMV-1
GAS MODULATING VALVE (BOARD) LOCATED IN LEFT CONTROL BOX

1MTA44-6 (435) 1MTA44-5 (436) 1MTA44-4 (2G)

1MTA43-5 1MTA43-6 1MTA43-7

BDA1
DIGITAL TO ANALOG (BOARD) LOCATED IN LEFT CONTROL BOX
DIP SWITCH 8 7 6 5 4 3 2 1 ON OFF

1MTA42-1 1MTA42-3

1MTA41-3 (V1) 1MTA41-5 (V2) 1MTA41-7 (V3) 1MTA41-9 (2G)

1MTA11-4 1MTA11-6 1MTA11-8 1MTA11-10

SRL SRH

BO1
OUTPUT (BOARD) LOCATED IN LEFT CONTROL BOX
DIP SWITCH 8 7 6 5 4 3 2 1 ON OFF

1MTA12-4 1MTA12-2 1MTA12-1 1MTA12-3

1MTA11-3 (V1) 1MTA11-5 (V2) 1MTA11-7 (V3) 1MTA11-9 (2G)

1MTA1-4 1MTA1-6 1MTA1-8 1MTA1-10

SRL SRH

BIO1
INPUT/OUTPUT (BOARD) LOCATED IN LEFT CONTROL BOX
OFF ON 8 7 6 5 4 3 2 1 DIP SWITCH

1MTA2-4 1MTA2-2 1MTA2-1 1MTA2-3

1MTA1-3 (V1) 1MTA1-5 (V2) 1MTA1-7 (V3) 1MTA1-9 (2G)

2MTA1-4 2MTA1-6 2MTA1-8 2MTA1-10

SRL SRH

BIO2 (AUTOLINT)
INPUT/OUTPUT (BOARD) LOCATED IN LEFT CONTROL BOX
OFF ON 8 7 6 5 4 3 2 1 DIP SWITCH

2MTA2-4 2MTA2-2 2MTA2-3 2MTA2-1

E — SRH — SEE W6DRYGTCB LINE 07

F — SRL — SEE W6DRYGTCB LINE 07

2MTA1-3 (V1) 2MTA1-5 (V2) 2MTA1-7 (V3) 2MTA1-9 (2G)

D — SEE W6DRYGTCB LINE 17

C — SEE W6DRYGTCB LINE 15

B — SEE W6DRYGTCB LINE 13

A — SEE W6DRYGTCB LINE 11

1MTA41-6 — V2

1MTA41-10 — 2G

3MTA1-4 — V2

3MTA1-3 — 2G

BRS1
ROTATIONAL SAFETY (BOARD) LOCATED IN LEFT CONTROL BOX

3MTA2-3

3MTA2-2

3MTA2-4

2G BSI V2

PXRS
ROTATION SAFETY SWITCH
(PROX-IMITY SWITCH)

1MTA45-7 — WHT

1MTA45-6 — BLK

1MTA45-5 — RED

SEE W6DRYGFEF LINE 14

C — 1HV 8 S+ 12

CRFE — CLOSES WHEN FIRE DESIRED — 5 — 2B5F

MG5

VEMMG
1
W
B
R
MODULAT-ING GAS VALVE
2

2F

B — SEE W6DRYGTCB LINE 10

WIRE COLORING CODE

WIRE NO.	VOLTAGE	WIRE COLOR
V1	+5V	BLUE
V2	+12V	BLUE/ORANGE
V3	-12V	BLUE/BLACK
2G	GND	BLUE/WHITE
SRH	SERIAL HIGH	BLUE/RED
SRL	SERIAL LOW	BLUE/BLACK
ESH	MILNET HIGH	BLUE/RED
ESP	MILNET LOW	BLUE/BLACK
-	24 VAC	BLUE/RED
-	120 VAC	RED
2F	CONTROL GROUND	RED/WHITE

NOTES:

1. 1MTA41, 1MTA42, 1MTA43 ARE LOCATED ON BDA1 (DIGITAL TO ANALOG BOARD).
2. 1MTA11, 1MTA12 ARE LOCATED ON BO1 (16 OUTPUT BOARD).
3. 1MTA1, 1MTA2, ARE LOCATED ON BIO1 (8 OUTPUT, 16 INPUT BOARD).
4. 3MTA2, 3MTA3 ARE LOCATED ON BRS1 (ROTATIONAL SAFETY BOARD).
5. 1MTA44, 1MTA45 ARE LOCATED ON BMV (GAS MODULATING VALVE BOARD).
6. 2MTA1, 2MTA2 ARE LOCATED ON BIO2 (8 OUTPUT, 16 INPUT BOARD).

W6DRYGGME
93051D

00 01 02 03 06 07 08 09 10 11 12 13 14 15 16 17 18 19

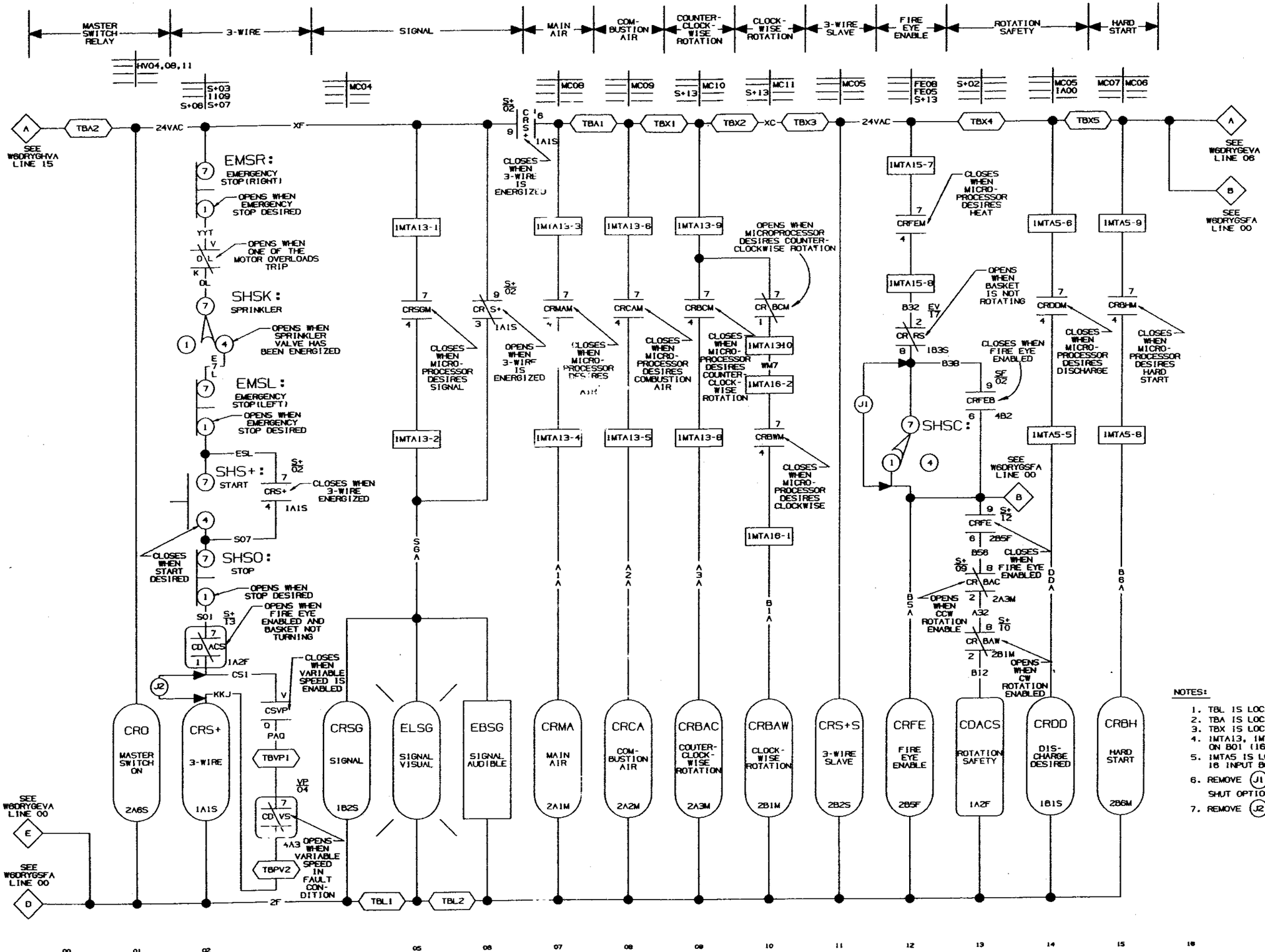

NOTES:

1. TBL IS LOCATED IN LEFT CONTROL BOX.
2. TBA IS LOCATED IN RIGHT CONTROL BOX.
3. TBX IS LOCATED IN LEFT CONTROL BOX.
4. 1MTA13, 1MTA15, 1MTA16 ARE LOCATED ON B01 (16 OUTPUT BOARD).
5. 1MTA5 IS LOCATED ON B101 (8 OUTPUT-16 INPUT BOARD).
6. REMOVE (J1) IF DRYER HAS VALVE SET SHUT OPTION.
7. REMOVE (J2) IF DRYER HAS VARIABLE SPEED.

W6DRYGS+A

MICRO 6 SYSTEMS

SCHEMATIC: 3-WIRE CIRCUIT

24V1P50HZ/24V1P60HZ

PELLERIN MILNOR CORPORATION

W6DRYGS+A 93051D

W6DRYGS+A 93051D

CONTROL CIRCUIT POWER

SERVICE VOLTS 200-240VAC | SERVICE VOLTS 380-480VAC | SERVICE VOLTS 600VAC | 110V50HZ/120V60HZ 24V50HZ/24V60HZ

TO 110V50HZ/120V60HZ BUS SEE W6DRYGMCB LINE 00

A / B / C — 1HF — S+ 01 — 7 — CRO — 4 — 2A6S — CLOSES WHEN MASTER SWITCH ENABLED

SEE W6DRYGHVA LINE 12 / LINE 13 / LINE 13

711 — 1 — EF37 — 7

POST DISCONNECT 208VAC YELLOW OR 240VAC BLACK

POST DISCONNECT 380-480VAC

POST DISCONNECT 600VAC

L11 — 717

SEE W6DRYGHVA LINE 03 / LINE 07 / LINE 10

TO 24V50HZ/24V60HZ BUS SEE W6DRYGS+A LINE 00

XF — 1 ON — 4 OFF — 7 — XA — 1 — EF37 — 7 — 24X

SHSMA: MASTER

EX37: 208VAC-240VAC TO 120VAC

BK / WHT — 110V50HZ / 120V60HZ — L21 — 2F

EX37: 380VAC-480VAC TO 120VAC

H4 380V 50HZ; H3 440V 60HZ / 400V 50HZ; H2 415V 50HZ; H5 480V 60HZ / 440V 50HZ — X2 X4 — H1 — X1 X3 — 110V50HZ / 120V60HZ — L21 — 2F

EX37: 600VAC TO 120VAC

H1 X1 — H2 X2 — 110V50HZ / 120V60HZ — L21 — 2F

EX24: 120VAC TO 24VAC

H4 H2 — H3 H1 — X3 X1 — X2 60HZ TAP (50HZ = X3 SHOWN CONNECTED) — 2F

TBL1 — TBL2

TBF4 — TBF3 — TBF2

TBG4 — TBD3 — TBG9 — TBE2 — TBE1 — TBA1 — TBC2 — TBF1

SEE W6DRYGVPA LINE 01 — J

SEE W6DRYGFEF LINE 00 — H

NOTES:

1. TBC, TBD, TBE, TBF, & TBG IS LOCATED IN RIGHT CONTROL BOX.
2. TBL IS LOCATED IN THE LEFT CONTROL BOX.

W6DRYGHVA 93051D

W6DRYGHVA
DRYER-GAS
MICRO 6 SYSTEMS
110V50HZ/120V60HZ
24V60HZ
CONTROL CIRCUIT POWER
SCHEMATIC: SOURCE
PELLERIN MILNOR CORPORATION

W6DRYGHVA 93051D

00 01 02 03 06 07 08 09 10 11 12 13 14 15 16 17 18 19